SAMSUNG

Instruction Manual

DVD-VR300

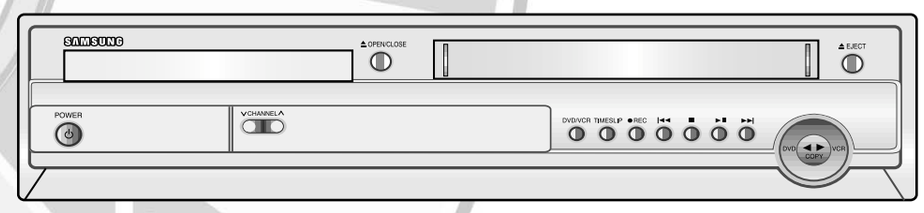

DVD VIDEO VHS Hi-Fi

www.samsungusa.com

Contents

◆ **Safety**
Warning 4
Precaution 5
Before reading the user's manual 10
How to use a DVD Recorder-VCR 11

◆ **Welcome**
General Features 13
Disc Information 14
Disc Specification 15

◆ **System Overview**
Front Panel Display 17
Front Panel Overview 18
Rear Panel 18
Tour of the Remote control 19

◆ **Connections**
Quick Overview 20
Unpacking 21
Connecting the Antenna Cable 21
Connecting the Video Cable 23
Connecting the Audio cable 26
Connecting the external devices 29
Connecting the Power Cord 31
Preparing the Remote Control 31

◆ **System Setup**
On-Screen Menu Navigation 32
Manual Clock Set 33
Setting Up the Language Features 34
Setting Up the Audio Options 35
Setting Up the Display (Video) Options 36
Setting Up the Parental Control 37
Channel Set 38
Auto Channel Memory 39
Channel Add/Delete 40
RF Out Channel 41
VCR Setting 42
Video Input 44

◆ **Playback**
*DVD Playback
Front Display 45
Playing a Disc 46
Using the Disc and Title Menu 47
Using the Search&Skip Functions 47
Show Motion Play / Step Motion Play 47
About ANYKEY 48
Repeat Play 48
Using the A-B Repeat Function 49
Moving to a scene directly 50
Selecting the subtitle & audio language 51
Changing the camera angle 52
Using the Bookmark 53
Zooming-In 54
Playing Back an Audio CD (CDDA) 55
Play Option Mode 56
Picture CD Playback 57
Picture back MP3 CD 58
Using PIP 59
*VCR Playback
Playing a VCR 60
Tracking 60
Special VCR Playback Features 61
S-VHS Playback 62
Variable Search System 62

Contents

◆ **Recording**
*DVD Recording
Recording the current channel you are watching 63
One-Touch Recording(OTR) 64
Making a Timer Recording 65
Editing Timer Record List 67
Cancle Timer recording 68
Watching the Images Being Recorded (Time Slip) .68
Recording through a DV jack 69
Deleting a Timer Recording Entry 69
*VCR Recording
Basic Recording 70
Special Recording Features 71
Record Speed 71
Copy to DVD or VCR 72

◆ **Editing**
Viewing the Menu Functions for a Disc 74
Viewing Title List 76
Playing a Title List Entry 77
Renaming a Title List Entry 78
Deleting a Title List Entry 79
Locking a Title List Entry 80
Deleting a Section from a Title List Entry . .81
Creating a Playlist Entry 83
Editing a Playlist Entry 84
Editing Scene for a Playlist Entry 86
Copying a Playlist Entry to the VCR 87
Deleting a Playlist Entry to the Playlist 91
Disc Manager 91

◆ **Reference**
Troubleshooting (DVD-VIDEO/DVD-RAM/
DVD-RW/DVD-R) 99
Troubleshooting 100
Problems and Solutions (VCR) 101
Specifications 102

Warning

TO REDUCE THE RISK OF ELECTRIC SHOCK, DO NOT REMOVE THE COVER(OR BACK).
NO USER-SERVICEABLE PARTS ARE INSIDE. REFER SERVICING TO QUALIFIED SERVICE PERSONNEL.

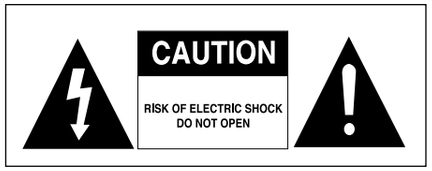

This symbol indicates “dangerous voltage” inside the product that presents a risk of electric shock or personal injury.

This symbol indicates important instructions accompanying the product.

Do not install this equipment in a confined space such as a bookcase or similar unit.

WARNING : To prevent damage which may result in fire or electric shock hazard, do not expose this appliance to rain or moisture.

CAUTION : DVD Recorder-VCRS USE AN INVISIBLE LASER BEAM WHICH CAN CAUSE HAZARDOUS RADIATION EXPOSURE IF DIRECTED.
BE SURE TO OPERATE RECORDER CORRECTLY AS INSTRUCTED.

FCC NOTE (for U.S.A):
This equipment has been tested and found to comply with the limits for a Class B digital device, pursuant to Part 15 of the FCC Rules. These limits are designed to provide reasonable protection against harmful interference
in a residential installation. This equipment generates, uses and can radiate radio frequency energy and, if not installed and used in accordance with the instructions,
may cause harmful interference to radio communications.
However, there is no guarantee that interference will not occur in a particular installation. If this equipment does cause harmful interference to radio or television reception, which can be determined by turning the equipment off and on, the user is encoruaged to try to correct the interference by one or more of the following
measures:

- Reorient or relocate the receiving antenna.
- Increase the separation between the equipment and receiver.
- Connect the equipment into an outlet on a circuit different from that to which the receiver is connected.
- Consult the dealer or an experienced radio/TV technician for help.

Note

- This unit can be used only where the power supply is AC 120V, 60Hz. It cannot be used elsewhere.
- This DVD Recorder-VCR is designed and manufactured to respond to the Region Management Information.
  If the Region number of a DVD disc does not correspond to the Region number of this DVD Recorder-VCR, the DVD Recorder-VCR cannot play the disc.
- This device is protected by U.S. patent numbers 4,631,603, 4,577,216, 4,819,098 and 4,907,093 and other intellectual property rights. The use of Macrovision’s copy protection technology in the device must be authorized by Macrovision and is intended for home and other limited payperview uses only, unless otherwise authorized in writing by Macrovision. Reverse engineering or disassembly is prohibited.

Precaution

Important Safety Instructions

Read these operating instructions carefully before using the unit. Follow all the safety instructions listed below. Keep these operating instructions handy for future reference.

1) Read these instructions.
2) Keep these instructions.
3) Heed all warnings.
4) Follow all instructions.
5) Do not use this apparatus near water.
6) Clean only with dry cloth.
7) Do not block any ventilation openings, Install in accordance with the manufacturer's instructions.
8) Do not install near any heat sources such as radiators, heat registers, stoves, or other apparatus (including amplifiers) that produce heat.
9) Do not defeat the safety purpose of the polarized or grounding- type plug. A polarized plug has two blades with one wider than the other. A groundingtype plug has two blades and a third grounding prong. The wide blade or the third prong are provided for your safety. if the provided plug does not fit into your outlet, consult an electrician for replacement of the obsolete outlet.
10) Protect the power cord from being walked on or pinched particularly at plugs, convenience receptacles, and the point where they exit from the apparatus.
11) Only use attachments/accessories specified by the manufacturer.
12) Use only with the cart, stand, tripod, bracket, or table specified by the manufacturer, or sold with the apparatus. When a cart is used, use caution when moving the cart/apparatus combination to avoid injury from tipover.
13) Unplug this apparatus during lightning storms or when unused for long periods of time.
14) Refer all servicing to qualified service personnel. Servicing is required when the apparatus has been damaged in any way, such as power-supply cord or plug is damaged, liquid has been spilled or objects have fallen into the apparatus, the apparatus has been exposed to rain or moisture, does not operate normally, or has been dropped.

Handling Cautions

- Before connecting other components to this recorder, be sure to turn them all off.
- Do not move the recorder while a disc is being played, or the disc may be scratched or broken, and the recorder’s internal parts may be damaged.
- Do not put a flower vase filled with water or any small metal objects on the recorder.
- Be careful not to put your hand into the disc tray.
- Do not place anything other than the disc in the disc Getting Started Precaution tray.
- Exterior interference such as lightning and static electricity can affect normal operation of this recorder. If this occurs, turn the recorder off and on again with the POWER button, or disconnect and then reconnect the AC power cord to the AC power outlet. The recorder will operate normally.
- Be sure to remove the disc and turn off the recorder after use.
- Disconnect the AC power cord from the AC outlet when you don’t intend to use the recorder for long periods of time.
- Clean the disc by wiping in a straight line from the inside to the outside of the disc.

Maintenance of Cabinet

For safety reasons, be sure to disconnect the AC power cord from the AC outlet.

- Do not use benzene, thinner, or other solvents for cleaning.
- Wipe the cabinet with a soft cloth.

Precaution

Disc Handling

Use discs with regular shapes. If an irregular disc (a disc with a special shape) is used, this DVD Recorder-VCR may be damaged.

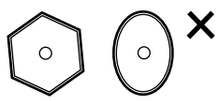

Holding discs

- Avoid touching the surface of a disc where recording is performed.

If the disc has dirt or condensation

- Water droplets may form on the surface of the disc if the disc is moved suddenly from a cold place to a warm one.

DVD-RAM, DVD-RW and DVD-R

- Clean with an optional DVDRAM/PD disc cleaner (LFK200DCA1 where available).Do not use cleaners or cloths for CDs to clean DVD-RAM/DVDRW/DVD-R discs.

DVD-Video, DVD-Audio, CD

Wipe off dirt or contamination on the disc with a soft cloth.

Cautions on handling discs

- Do not write on the printed side with a ball-point pen or pencil.
- Do not use record cleaning sprays or antistatic. Also, do not use volatile chemicals, such as benzene or thinner.
- Do not apply labels or stickers to discs. (Do not use discs fixed with exposed tape adhesive or leftover peeled-off stickers.)
- Do not use scratch-proof protectors or covers.
- Do not use discs printed with label printers available on the market.
- Do not load warped or cracked discs.

Disc Storage

Be careful not to harm the disc because the data on these discs is highly vulnerable to the environment.

- Do not keep under direct sunlight.
- Keep in a cool ventilated area.
- Store vertically.
- Keep in a clean protection jacket.
- If you move your DVD Recorder-VCR suddenly from a cold place to a warm place, condensation may generate on the operating parts and lens and cause abnormal disc playback. If this occurs, remove the disc and wait for one to two hours with the power on before attempting playback.

Disc Specifications

DVD-Video

- A digital versatile disc (DVD) can contain up to 135-minutes of images, 8-language audio and 32 subtitle languages. It is equipped with MPEG-2 picture compression and Dolby 3D surrounding, allowing you to enjoy vivid and clear theater quality images in the comfort of your own home.
- When switching from the first layer to the second layer of a double-layered DVD Video disc, there may be momen-tary distortion in the image and sound.
  This is not a malfunction of the unit.
- Once a DVD-R/RW recorded in Video Mode is finalized, it becomes DVD-Video.

Audio CD

- An audio disc on which 44.1kHz PCM Audio is recorded
- Plays CD-DA format audio CD-R and CD-RW discs. May not be able to play some CD-R or CD-RW discs due to the condition of the recording.

MP3 CD-R/RW

- Only CD-R discs with MP3 files recorded with ISO9660 or JOLIET format can be played back
- Only MP3 files with the "mp3", and "MP3" extension can be used.
- For MP3 files recorded with a VBR(Variable Bit Rates), from 32 Kbps to 320 Kbps, the sound may cut in out.
- Playable range of bitrate is from 56Kbps to 320Kbps.
- The unit can handle maximum of 1000 files, maximum1000 folders.

JPEG CD-R/RW

- The unit can handle maximum of 1000 files, maximum1000 folders
- MOTION JPEG is not supported.

For using CD-R/RW

- If the CD-R/RW disc was not recorded as a closed session, you may experience a delay in the early playback time , and may not be played all recorded files.
- Some CD-R/RW discs may not be playable with this unit, depending on the device which was used to burn them.
  For contents recorded on CD-R/RW media from CDs for your personal use. Playability may vary depending on contents and discs.

MP3 CD-R/RW

- Once a DVD-R/RW recorded in Video Mode is finalized, it becomes DVD-Video.
- You can record onto the available space on the disc and perform editing functions such as giving titles to discs and programs and erasing programs before finalizing.
- When programming is erased from a DVD-R, that space does not become available. Once an area on a DVD-R is recorded on, that area is no longer available for recording, whether the recording is erased or not.
- It takes about 30 seconds for the unit to complete recording management information after recording finishes.
- This product optimizes the DVD-R for each recording. Optimizing is carried out when you start recording after inserting the disc or turn on the unit. Recording onto the disc maybecome impossible if optimizing is carried out too many times.
- Playback may be impossible in some cases due to the condition of recording.
- This unit is compatible with 1x - 4x recording speed discs.
- This unit can play back DVD-R discs recorded and finalized with a Samsung DVD video recorder. It may not be able to play some DVD-R discs depending on the disc and the condition of the recording.

Precaution

DVD-RW Disc Playback and Recording

- Recording and playback can be performed on a DVD-RW discs in both of Video Mode and VR Mode.
- Once a DVD-RW recorded in VR Mode is finalized,you cannot perform addtional recording.
- Once a DVD-RW recorded in Video Mode is finalized, it becomes DVD-Video.
- In both modes, playback can be performed before and after finalization, but additional recording, deleting and editing can not be performed after finalization. see below the table...
- If you want to record the disc in VR Mode and then record in V Mode, be sure to execute Format. Be careful when executing Format because all the recorded data may be lost.
- A DVD-RW blank disc is initialized to Video Mode when first initialized.

DVD-RW (VR mode)

- This is a format that is used for recording data on a DVD-RAM or DVD-RW disc. You can repeat recording, editing, deleting, partial deletion, creation of playlist, and etc.
- A disc that is recorded in this mode may not be played by an existing DVD player.

DVD-RW (Video mode)

- This is a format that is used for recording data on a DVD-RW or DVD-R disc. The disc can be played by an existing DVD player once it has been finalized.
- If a disc that has been recorded in V Mode but has not been finalized by a different maker's recorder, it cannot be played or additionally be recorded by this recorder.

DVD-RAM Disc Playback and Recording

- DVD-RAM discs come with or without a cartridge. For this product, we recommend DVD-RAM discs that come with cartridges.
- Some cartridges are able to eject the disc inside. Even if you are able to eject the disc, always use the disc with the cartridge to ensure correct operation.
- DVD-RAM discs have a Write Protect tab in order to avoid accidental erasure of recorded data. With the Write Protect tab set to PROTECT, you can play the disc, but recording or erasing will not work. Set the Write Protect tab to UNPROTECT to format the disc or erase data.
- Ensure that the recording mode is set to VR mode. Otherwise, this product will not be able to play the recording.
- You cannot play a DVD-RAM in a normal DVD player because a DVD-RAM is usually not compatible with a normal DVD player. However, a DVD-RAM can be played in some types of DVD players supporting DVD-RAM standards.
- DVD-RAM recorded on this unit may not work with other DVD players. For the determination of compatibility with these DVD-RAM discs, refer to the user's manual for the player.
- DVD-RAM recorded on this product may not be compatible with other DVD players, refer to the manual for the player to determine compatibility with these DVD-RAM disc.
- This unit is compatible with both non-cartridge and cartridge DVD-RAM, but the write-protect tabs on cartridge-type discs give better protection to your recordings.

Protection

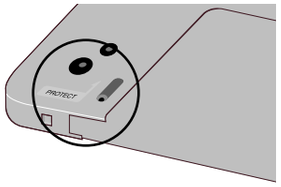

This DVD Recorder-VCR can allow you to protect the contents of your discs, as described in the ways below.

- Cartridge-protected:
  With the write-protect tab located at the protect position, the contents of the disc cannot be recorded, edited, or erased.
- Program-protected: See page 80 "Locking the title List"
- Disc-protected: See page 93 "Disc Protection"

❊ Illegal copies of DVD-RAM/DVD-RW/DVD discs that are incompatible with the DVD-VIDEO format can not be played with this product.
❊ For more information on recording a DVD, consult your DVD-RAM/DVD-RW/DVD-R manufacturer.
❊ If poor quality DVD-RAM/DVD-RW/DVD-R discs are used, your recordings may fail.

Do not use the following discs!

- LD, CD-G, CD-I, CD-ROM, DVD-ROM, DVD+R and DVD+RW discs should not be used in this product.[Note]
  Disc types that can be played : CD/CD-R/CDRW/MP3/JPEG/DVD-Video/DVD-RAM/DVD-RW/DVD-R. However, if your DVD-RW disc was recorded with another device, it can be played only if it was recorded and finalized in video mode.
- Some commercial discs and DVD discs purchased outside your region may not be playable with this product. When these discs are played, either "No disc." or "Please check the regional code." will be displayed.
- If your DVD-RW disc is an illegal copy or is not in DVD video format, it may also not be playable.

COPY PROTECTION

- Many DVD discs are encoded with copy protection. Because of this, you should only connect your DVD Recorder-VCR directly to your TV, not to a VCR. Connecting to a VCR results in a distorted picture from copy-protected DVD discs.
- This product incorporates copyright protection technology that is protected by methods claims of certain U.S. patents and other intellectual property rights owned by Macrovision Corporation and other rights owners. Use of this copyright protection technology must be authorized by Macrovision Corporation, and is intended for home and other limited viewing uses only unless otherwise authorized by Macrovision Corporation. Reverse engineering or disassembly is prohibited.

Before reading the user's manual

Make sure to check the following matters before reading the user's manual.

Icons that will be used for Safety Instructions

Icon	Term	Definition
	Warning	This involves that the violation of any of instructions may cause human beings to die or have a severe injury.
	Caution	This involves that the violation of any of instructions may causehuman beings to be injured or sustain material loss.

About the use of this user's manual

1) Be sure to be familiar with Safety Instructions before using this product. (See pages 4~7)
2) If a problem occurs, check for Troubleshooting. (See pages 99)

Copyright

©2004 Samsung Electronics Co.
All rights reserved; No part or whole of this user's manual may be reproduced or copied without the prior written permission of Samsung Electronics Co.

Icons that will be used in the body

Icon	Term	Definition
DVD	DVD	This involves a function availablein DVD or Video Mode DVD-R
VCD	VCD	This involves a function available in a Video CD or CD/Video format CD-R/CD-RW
RAM	RAM	This involves a function available in DVD-RAM
RW	RW	This involves a function available in DVD-RW
R	R	This involves a function available in DVD-R
CD	CD	This involves a function available in a data CD (CD-ROM, CD-R, or CD-RW
JPEG	JPEG	This involves a function available in a data picture CD (CD-ROM, CD-R, or CD-RW)
MP3	MP3	This involves a function available in a data CD (CD-ROM, CD-R, or CD-RW on which MP3 is recorded)
	Caution	This involves a case where a function does not operate or settings may be cancelled
	NOTE	This involves hints or the contents in the page that may help each function operate
Preliminary	Preliminary	Check items before operating each function
	One-Touch button	A function that can be operated by using only one button

How to use a DVD Recorder-VCR

Step 1 Select the disc type

Select the disc type according to the chart on the rear cover, as each type has different features. This recorder can precede recording on the following types of discs. If you want to repeatedly record on the same disc or you want to edit the disc after recording, select a rewritable DVD-RW , DVD+RW or DVD-RAM type disc. If you want to save recording without any change, howev-er, choose a non-rewritable DVD-R.

Step 2 Format the disc to start recording

Unlike a VCR, the recorder automatically starts formatting when an unused disc is inserted. This is required for the preparation of recording on a disc.

Using a DVD-RAM/-RW
This type of disc can be formatted in either DVD-Video format (Video mode) or DVD-Video Recording format (VR mode). You can play a video mode disc on various DVD components. A VR mode disc allows more varied editing.

Using a DVD-R
This type of disc can be formatted in DVD Video format. You can play this type of disc on various DVD compo-nents. After formatting is complete, now you can record on the disc.

Note
- Only one format can be used in one DVD-RW.
- You can change the DVD-RW format to another format. It should be noted that the data of the disc may be lost when changing formats.
- All discs cannot be played on other DVD components.

Step 3 Recoding

There are two different recording methods, ie., Direct Recording and Timer Recording. Timer recording is classi-fied into Once, Weekly, and Every according to the record-ing type or that is classified into XP (high quality), SP (standard quali-ty), LP (low quality), and EP (lower quali-ty) according to the recording mode. When recording is set in the FR mode, the best quality picture can be record-ed during the remaining time.

Step 4 Playing recording data

You can select the title you want to play in a displayed menu and then immediately start playback.

The data of DVD consists of sections, called as titles, and sub sections, called as chapters.

On this recorder, a title is created between two points where you start and stop recording.

Chapters are created automatically at specified intervals, or can be created manually. (DVD-RWs in VR mode only)

Step 5 Editing a recording disc

You can find editing discs a lot easier than conventional video tapes. Besides, the recorder can support many differ-ent edit functions, possible only with DVDs. With a simple and easy edit menu, you can operate vari-ous edit functions, such as delete, copy, rename, lock, etc., on a recorded title.

Creating a playlist (DVD-RAM/-RW in VR mode

With this recorder, you can create a new playlist on the same disc and edit it without the change of the original recording. Since Playlist does not occupy much disc space, you need only one recorder and one disc.

How to use a DVD Recorder-VCR

Step 6 Finaliaing & Playing on other DVD components

To play your DVD on other DVD components, finalizing may be necessary in some cases. First, finish up all your editing and recording operations, then finalize the disc.

When using a DVD-RW disc in VR Mode

Although finalizing is generally unnecessary when playing the disc on a VR Mode compatible component, a finalized disc should be used for playback on that type of compo-nent. You can still edit and record on the disc even after finalizing.

When using a DVD-RW disc in Video Mode

The disc should be finalized first to enable playback on anything other than this recorder. No more editing or recording can be made on the disc once it has been final-ized. To enable recording on the disc again, you should format it again. Reformatting will erase all the previous data.

When using a DVD-R disc

You should finalize the disc to play it on a component other than this recorder. You cannot edit or record on the disc once it has been finalized.

Welcome

General Features

DVD-VR300 allows you to record and playback high quality digital images on a DVD-RAM/DVD-RW/DVD-R disc. You can record and edit digital images on DVD-RAM/DVD-RW discs as if old VCR tapes.

1 High quality digital audio and video recording and playback

Record up to about 12-hour images with a double side 9.4 GB DVD-RAM disc, and up to about 6-hour images with a 4.7 GB DVD-RAM disc, depending on the recording mode.

2 Creating DVD video title using DVD-RW disc

With DVD-VR300, create your own DVD video title on 4.7 GB DVD-RW discs.

3 A Variety of Recording Options

Select an appropriate recording mode between XP, SP, and LP to meet your recording needs. (See page 65~66.)
Recordingzquality and time on a 4.7-GB DVD-RAM or DVD-RW disc:

- XP mode - High quality, about 1 hour
- SP mode - Standard quality, about 2 hours
- LP mode - Low quality, about 4 hours
- EP mode - Lower quality, about 6 hours

4 Copying digital camcorder content using DV input jack

Record digital camcorder images onto DVD-RAM/DVD-RW/DVD-R discs using the DV input jack (IEEE 1394-4pin). (See page 69.)

General Features

5 Time Slip and Picture In Picture (PIP)

Use the Time Slip functionality to playback the recorded images while a recording is proceeding (DVD-RAM only). Use the PIP functionality to view both of the playback and recording screens at the same time.

6 High quality progressive scan

Progressive scanning provides high resolution and flicker free images. The 12-bit 108-MHz DAC, 2D Y/C Separating circuitry and Time Base Corrector processor technology provides you with the highest image playback and recording quality. (See page 25~26.)

7 A variety of functionalities with easy-to-use user interface

Integrated menu system and messaging functionality allow you to perform the desired operations easily and conveniently. With a DVD-RAM/DVD-RW disc, you can edit recorded images, create playlist, and edit images in specific sequence according to your needs.

Disc Information

Do not use the following discs!

- LD, CD-G, CD-I, CD-ROM, DVD-ROM, DVD+R, and DVD+RW discs should not be used in this product.
  - ➢ Disc types that can be played back : CD/CD-R/CD-RW/MP3/DVD/DVD-RAM/ DVD-RW/DVD-R.
    However, if your DVD-RW disc is recorded with other device, it can be played back only if it was recorded and finalized in video mode.
- Some commercial discs and DVD discs purchased outside your region may not be played back in this product. If those kinds of unsupported discs are played back, either “No disc.” or “Please check the regional code.” will be displayed.
- If your DVD-RW disc is an illegal copy or is not of DVD video format, it may not be played back.

COPY PROTECTION

- Many DVD discs are encoded with copy protection. Because of this, you should only connect your DVD player directly to your TV, not to a VCR. Connecting to a VCR results in a distorted picture from copy-protected DVD discs.
- This product incorporates copyright protection technology that is protected by methods claims of certain U.S.patents and other intellectual property rights owned by Macrovision Corporation and other rights owners. Use of this copyright protection technology must be authorized by Macrovision Corporation, and is intended for home and other limited viewing uses only unless otherwise authorized by Macrovision Corporation. Reverse engineering or disassembly is prohibited.
- Manufactured under license from Dolby Laboratories. “Dolby” and the double-D symbol are trademarks of Dolby Laboratories. Confidential unpublished works. 1992-1997 Dolby Laboratories Inc. All rights reserved.
- “DTS” and “DTS Digital Out” are trademarks of Digital Theater Systems, Inc.
  1996 Digital Theater Systems, Inc. All rights reserved.

Disc Specifications

DVD-Video/Audio Disc Playback

- When switching from the first layer to the second layer of a double-layered DVD Video disc, there may be a momentary distortion in the image and sound. This seems that the DVD Recorder-VCR is malfunctioning, but this is not a malfunction.
- DVD-Audio discs operating with a DVD Video recorder can be played.
  - ➢ Only video content on a DVD-Audio disc can be played.

CD-R Disc Playback

- Some CD-R discs may not be playable with this product, depending on the device, which was used to burn them. (i.e. the type of CD recorder or personal computer used)
- Only a CD-R disc recorded in closed session mode is guaranteed playable with this product. If a disc was recorded in open session mode, it may not be completely playable.
- Some CD-R discs may not be playable with this product, depending on the recording conditions and the disc type.

CD-R MP3 Disc Playback

- Only CD-R discs with MP3 files recorded with the ISO 9660 or JOLIET format can be played back.
- The MP3 files should be recorded at a bit rate of at least 56kbps to ensure proper playback.
- Only MP3 files with the ".mp3", and "MP3" extension can be played.
- If the CD-R disc was not recorded as a closed session, you may experience a delay in the early playback time, and the recorder may not play all recorded files.
- For files recorded with a Variable Bit Rate (VBR), from 32 kbps to 320 kbps, the sound may cut in and out.

DVD-RW Disc Playback and Recording

- You can record to DVD-RW discs with this product.
- This product can play finalized DVD-RW discs recorded in Video mode.
- Recording and playback can be performed on a DVD-RW disc in both of video mode and VR mode.
- In both modes, playback can be performed before and after finalization, but additional recording, deletion, and editing cannot be performed after finalization.
- VR mode
  Recording and erasing can be performed as many times as possible on a disc.
  Various edit function can be performed such as deleting unwanted parts. Depending on recording conditions, DVD-RW discs that has been recorded in VR mode can be played by DVD Recorder-VCRs that can play DVD-RW discs.
- Video mode
  The DVD-RW disc that has been finalized in the video mode can be played by DVD Recorder-VCRs that can play DVD-RW discs.

DVD-R Disc Playback and Recording

- Once it is finalized, no further recording can be performed.
- DVD-R discs cannot be formatted or unfinalized.

DVD-RAM Disc Playback and Recording

- DVD-RAM discs come with or without a cartridge. For this product, we recommend DVD-RAM disc that come with cartridges.
- Some cartridges are able to eject the disc inside. Even if you are able to eject the disc, always use the disc with the cartridge to ensure correct operation.
- DVD-RAM discs have a Write Protect tab in order to avoid accidental erasure of recorded data.
  With the Write Protect tab set to PROTECT, you can play the disc, but recording or erasing will not work.
  Set the Write Protect tab to UNPROTECT to format the disc or erase data.
- Ensure that the recording mode is set to VR mode. Otherwise, this product will not be able to play the recording.
- It is impossible to play the DVD-RAM in a normal DVD Recorder-VCR because a DVD-RAM is usually not compatible with a normal DVD Recorder-VCR. However, a DVD-RAM can be played in some types of DVD Recorder-VCRs supporting DVD-RAM standards.
- It is only possible to use discs which conform with DVD-RAM standard Version 2.0.

System Overview

Description

Front Panel Display

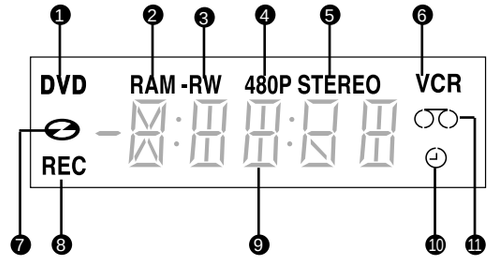

1 When the light is on, DVD is operating.
2 DVD-RAM is activated.
3 DVD-R or DVD-RW is activated.
4 Progressive Scan mode is working.
5 When you watch SAP/STEREO channel or play back Hi-Fi VCR tapes, it is on.
6 VCR is activated.
7 DVD or CD media is loaded.
8 Record function is working.
9 The time, counter position, time remaining
10 When you set a Timer recording, it or current deck status is indicated. is on.
11 VHS Videotape is loaded.

Front Panel Overview

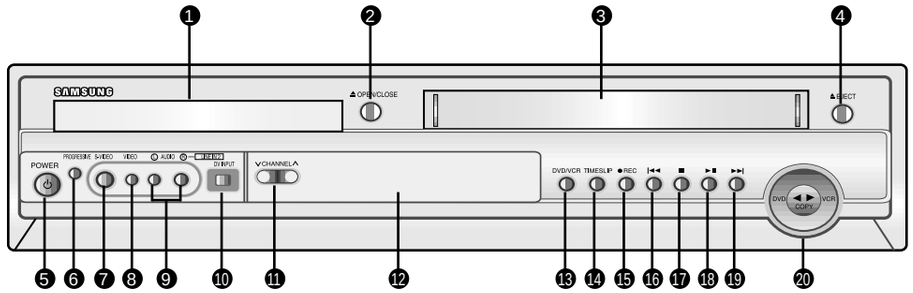

1	DVD DECK	2	DVD OPEN/CLOSE BUTTON
3	VCR DECK	4	VCR EJECT BUTTON
5	POWER BUTTON	6	PROGRESSIVE BUTTON
7	S-VIDEO INPUT	8	VIDEO INPUT
9	AUDIO L.R INPUT	10	DV INPUT
11	CHANNEL ∨/ ∧	12	FRONT PANEL DISPLAY
13	DVD/VCR BUTTON	14	TIMESLIP BUTTON
15	RECORD BUTTON	16	REW/SKIP BUTTON
17	STOP BUTTON	18	PLAY/STILL BUTTON
19	F.F/SKIP BUTTON	20	COPY BUTTON

Rear Panel

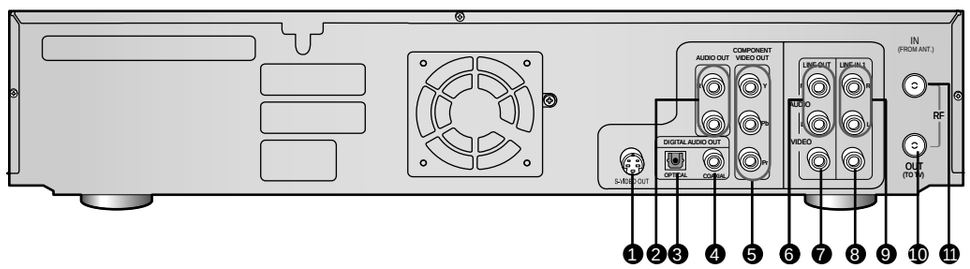

1	S-VIDEO OUT	2	AUDIO OUT L,R
3	DIGIRAL AUDIO OUT (OPTICAL)	4	DIGIRAL AUDIO OUT (COAXIAL)
5	COMPONENT VIDEO OUT	6	AUDIO OUT R,L
7	VIDEO OUT	8	VIDEO IN
9	AUDIO IN R,L	10	RF ANTENNA INPUT
11	RF OUT TO TV		

Tour of the Rmote Control

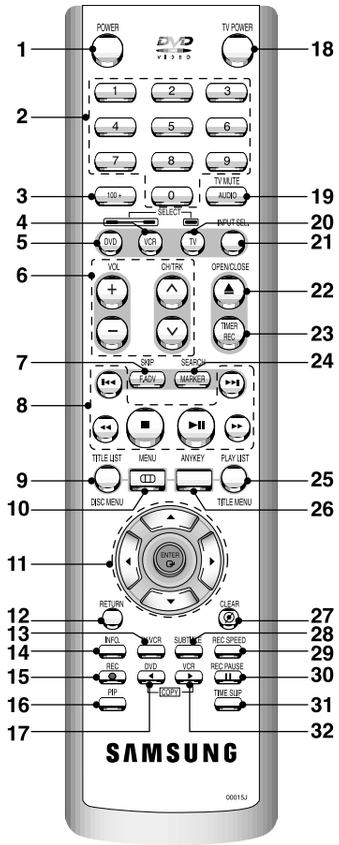

1. **POWER Button**
2. **NUMBER Button**
3. **100+ Button**
   Press this to select channel 100 or higher.
4. **VCR Button**
5. **DVD Button**
   Press this when you use a DVD.
6. **TV Control Buttons**
   - VOLUME Button
     TV volume adjustment
   - CHANNEL Button
     Use this to select a TV channel.
7. **F.ADV Button**
8. **Playback-related buttons**
   Forward/Rewind, Search, Skip, Stop, Play/Pause
9. **TITLE LIST(DISC MENU) Button**
   Use this to enter the View Recoding list/disk menu.
10. **MENU Button**
    Brings up the DVD Recorder-VCR's setup menu.
11. **ENTER/DIRECTION Button**
    (UP/DOWN or LEFT/RIGHT Buttons)
    This button functions as a toggle switch.
12. **RETURN Button**
    Returns to a previous menu.
13. **TV/VCR Button**
14. **INFO Button**
    This will display current setting or a state of a disc.
15. **REC Button**
    Use to make a recording on DVD-RAM/-RW/-R discs.
16. **PIP Button**
17. **DVD Button**
    Press this when you use a DVD.
18. **TV POWER Button**
19. **AUDIO Button**
    Use this to access various audio functions on a disc.
20. **TV Button**
    Press this to operate TV.
21. **INPUT Button**
    Select line input signal in external input mode(Tuner or Line input)
22. **OPEN/CLOSE Button**
    To open and close the disc tray.)
23. **TIME SLIP Button**
    Use this to watch, a recently recorded 10-second program on the PIP screen, while recording.
24. **MARKER Button**
    Use this to bookmark a position while playing a disc.
25. **PLAY LIST(TITLE MENU) Button**
    Use this to return to the Title menu, or to view the recorded files list.
26. **ANYKEY Button**
    Use this to view the status of the disc that is being played.
27. **CLEAR Button**
28. **SUBTITLE Button**
    Press this to switch the DVD's subtitle language.
29. **REC SPEED Button**
30. **REC PAUSE Button**
    Use this to pause during recording.
31. **TIME SLIP Button**
32. **VCR Button**

Connecting & Setting Up

Quick Overview

A Quick overview presented in this guide will give you enough imformation to start using the recorder.

Step 1 : Unpacking

▼

Step 2 : Connecting the Antenna Cable

▼

Step 3 : Connecting the Video Cords

▼

Step 4 : Connecting the Audio Cords

▼

Step 5 : Connecting the external device

▼

Step 6 : Connecting the Power Cord

▼

Step 7 : Preparing the Remote

Step 1: Unpacking

Accessory

Check for the supplied accessories below.
- Video/Audio Cable (AC97-01746A)
- RF Cable for TV (AC39-42001J)
- Remote Control (AK59-00015J)
- Batteries for Remote Control (AAA Size) (AC43-12002H)
- User's Manual (AK68-00416A)
- Dispose of batteries according to local environmental regulations. Do not put them in the household trash.

Step 2: Connecting the Antenna Cable

There are several ways to connect your DVD Recorder-VCR. Select one of the following antenna connecting that best suits you below.
- Method 1 : Antenna + DVD Recorder-VCR + TV : No Cable box
- Method 2 : Antenna +Cable box + DVD Recorder-VCR + TV : Cable box with many scrambled channels
- Method 3 : Antenna + DVD Recorder-VCR + Cable box + TV : Cable box with a few scrambled channels

Note

- If you are using an off-air antenna that has 300-ohm twin flat leads, use an external antenna connector (300-75 ohm adaptor : not supplied) to connect the antenna to the DVD Recorder-VCR.

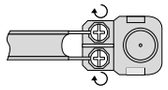

- If you have two separate antennas (one VHF and one UHF), use a UHF/VHF com-biner- adaptor (available at most electron-ics shops) to connect the antenna to the DVD Recorder-VCR.

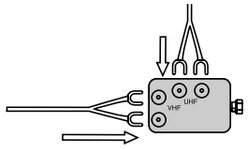

- **Note to CATV system installer**: This reminder is provided to call CATV system installer's attention to Article 820-40 of the National Electrical Code (Section 54 of Canadian Electrical Code, Part I), that provides guidelines for proper grounding and, in particular, specifies that the cable ground shall be connected to the grounding system of the building as close to the point of cable entry as practical.

Step 2: Connecting the Antenna Cable

Method1 : Antenna + DVD Recorder-VCR + TV : No Cable box

You can record any non-scrambled channel by selecting the channel on the DVD Recorder-VCR. Also use this Method if you watch channels without cable box.

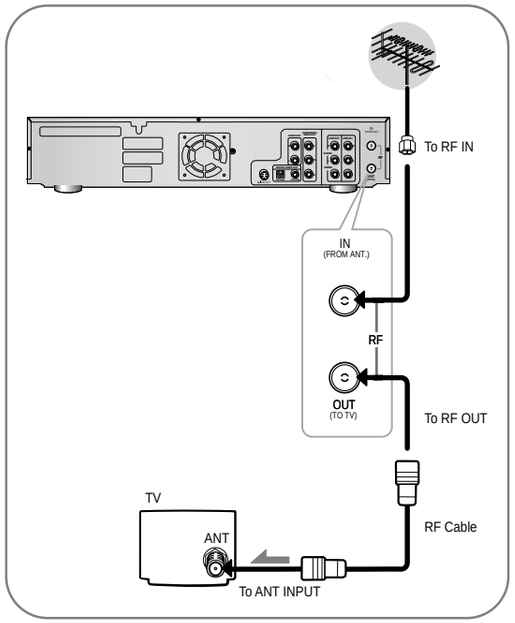

Method 2 : Antenna +Cable box + DVD Recorder-VCR + TV : Cable box with many scrambled channels

You can record any unscrambled channel by selecting the channel on the cable box. You cannot record one channel while watching another channel. Be sure that the cable box is turned on.

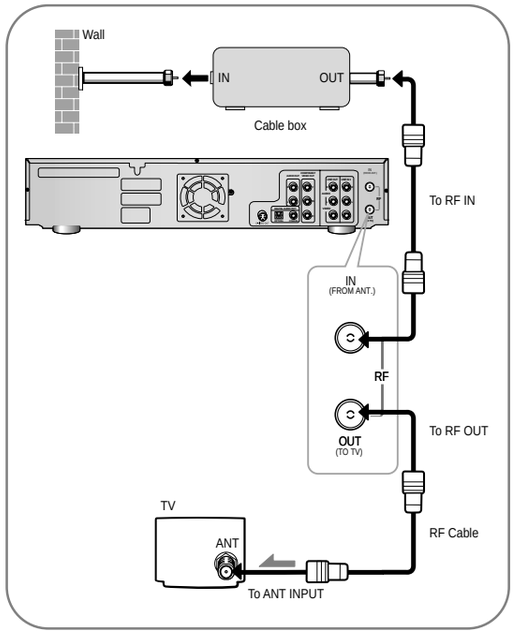

Method 3 : Antenna + DVD Recorder-VCR + Cable box +TV : Cable box with a few scrambled channels

You can record any non-scrambled channel by selecting the channel on the cable box. You cannot record scram-bled channel that require a cable box.

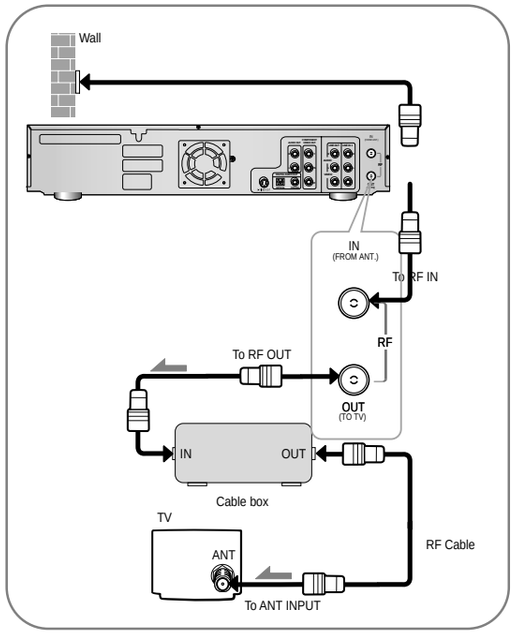

Step 3: Connecting the Video Cable

There are several ways to connect your DVD Recorder-VCR.Select one of the following video connecting that best suits you below.

- Method 1 : Connecting to a video input jack
- Method 2 : Connecting to a s-video input jack
- Method 3 : Connecting to a component video input jacks in 480i mode
- Method 4 : Connecting to a component video input jacks in 480p mode

S-Video, Component video and Progressive Output Modes

- S-Video and component video output are available only if your TV supports S-Video input or component video input, respectively. If S-Video or component video output does not work, check the TV connec-tions and the TV input selection settings. (For infor-mation on how to connect to a TV, see pages 21 ~ 22.)
- Compared to standard interlaced video, progressive scan doubles the amount of video beam lines fed to your TV, resulting in a more stable, flicker-free, and clear image than interlaced video. The progressive scan video output jack is used in progressive output mode. This is only available for TVs, which support progressive scan.
- Consumers should note that not all high definition television sets are fully compatible with this product and may cause artifacts to be displayed in the picture. In case of 525 progressive scan picture problems, it is recommended that the user switch the connection to the 'standard definition' output. If there are questions regarding our TV set compatibility with this model 525p DVD player, please contact our customer service center.

Connections

Step 3: Connecting the Video Cable

Method 1 : Connecting to a video input jack

You can record any non-scrambled channel by selecting the channel on the cable box. You cannot record scram-bled channel that require a cable box.

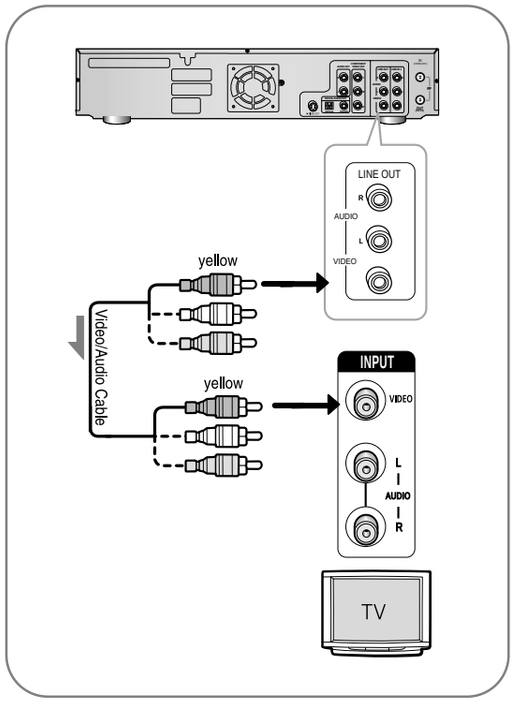

Method 2 : Connecting to a s-video input jack

Connect a s-video cable(not supplied) between the S-VIDEO OUT jack on DVD Recorder-VCR and S-VIDEO IN jack on the TV (or AV amplifier).

- You will enjoy high quality images. S-Video separates the picture element into back and white (Y) and color (C) signals to present clearer images than video input mode.

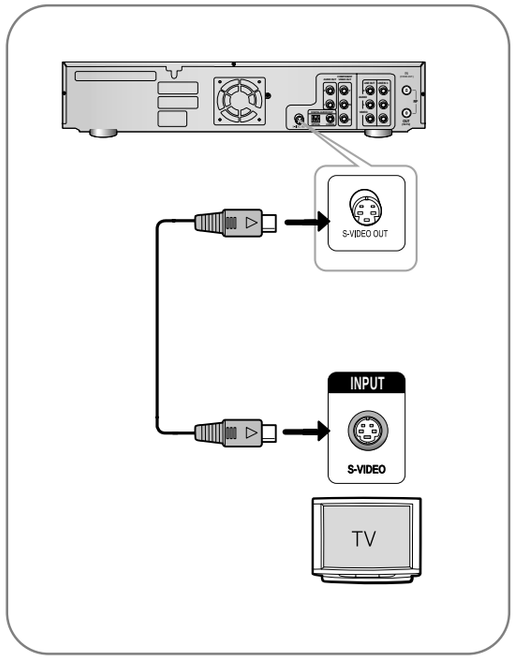

Method 3 : Connecting to a compo-nent video input jacks(Y,Pb,Pr) in 480i mode

1. Connect component video cables(not supplied) between the COMOUNENT VIDEO OUT jacks on DVD Recorder-VCR and COMPONENT VIDEO IN jacks on the TV (or AV amplifier).
2. Press the Progressive switch on the front panel. If anything is not displayed on Led-display, it is 480i Mode. Make sure that the disc has stopped has stopped completely before changing the switch position.

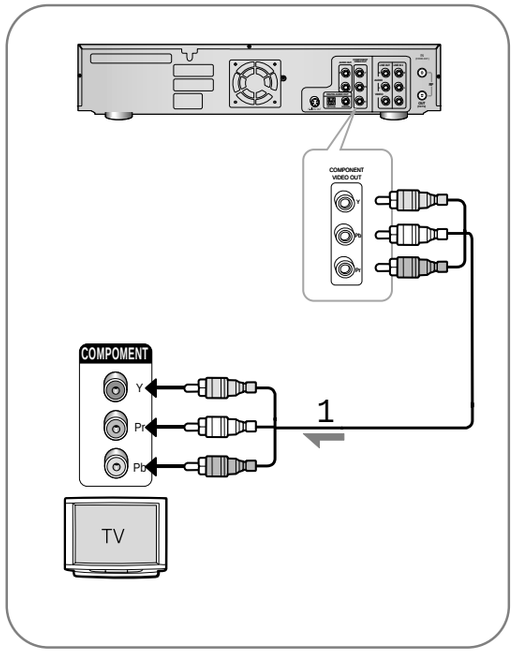

- You will enjoy accurate color reproduction high quali-ty images. Component video separates the picture ele-ment into back and white (Y), blue (Pb) and red (Pr) signals to present most clear and clean images.

Note

- Make sure that the color coded connections match. That is, the Y, Pb and Pr component output jacks of your DVD Recorder-VCR should be connected to the exact corresponding component input jacks on your TV. Otherwise, red or blue images will be displayed on the TV screen.
- Make sure that the left and right audio output jacks of your DVD Recorder-VCR are connected to the left and right audio input jacks of your TV, respectively.(page 26)

Method 4 : Connecting to a compo-nent video input jacks(Y,Pb,Pr) in 480p mode

Set Your TV should support progressive scan input to allow you to watch 480p video output.

1. Connect component video cables(not supplied) between the COMOUNENT VIDEO OUT jacks on DVD Recorder-VCR and COMPONENT VIDEO IN jacks on the TV (or AV amplifier).
2. Press the Progressive switch on the front panel. If “480P” is not displayed on Led-display, now your DVD Recorder-VCR-VCR is operated on 480P Mode. Make sure that the disc has stopped com-pletely before changing the switch possition.

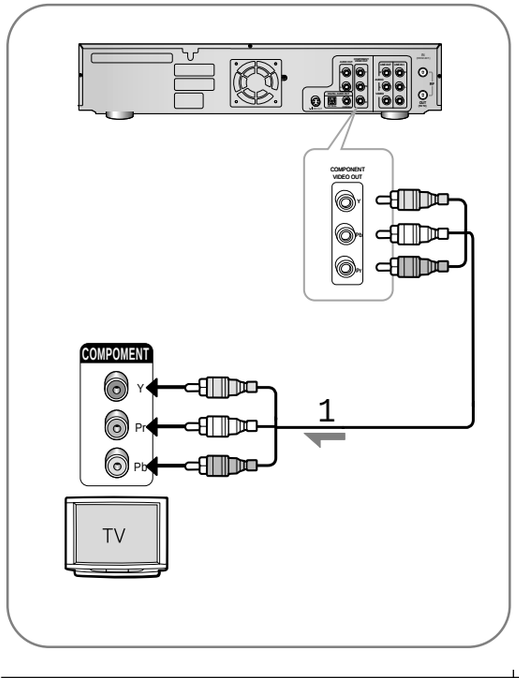

Step 3: Connecting the Video Cable

Note

- Make sure that the color coded connections match. That is, the Y, Pb and Pr component output jacks of your DVD Recorder-VCR should be connected to the exact corresponding component input jacks on your TV. Otherwise, red or blue images will be displayed on the TV screen.
- Once 480p video output mode is selected, Video, S-Video and 480i outputs are disabled.
- Make sure that the left and right audio output jacks of your DVD Recorder-VCR are connected to the left and right audio input jacks of your TV, respectively.(page 26)

Step 4 : Connecting the Audio cable

There are several ways to connect your DVD Recorder-VCR. Select one of the following audio connecting that best suits you below.

- Method 1 : Connecting to your TV
- Method 2 : Connecting to a stereo amplifier an 2speakers(analog audio out / digital audio out)
- Method 3 : Connecting to an AV amplifier with dolby surround decoder and 3 to 6speakers(analog audio out / digital audio out)
- Method 4 : Connecting to an AV amplifier with a digi-tal input jack and 6speakers

Manufactured under license from Dolby Laboratories. “Dolby” and the double-D symbol are trademarks of Dolby Laboratories.Confidential unpublished works. ©1992-1997 Dolby Laboratories. All rights reserved.

“DTS” and “DTS Digital Out” are trademarks of Digital Theater Systems, Inc.
©1996 Digital Theater Systems, Inc.
All rights reserved.

Method 1 : Connecting to your TV

This connection will use your TV’s speakers.

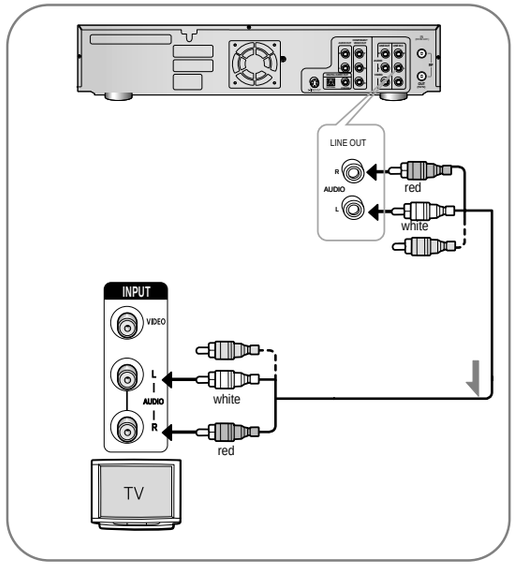

Method 2-1 : Connecting to a stereo amplifier and 2speakers(audio out)

If your stereo amplifier only has audio input jacks (L and R), use audio out jacks.

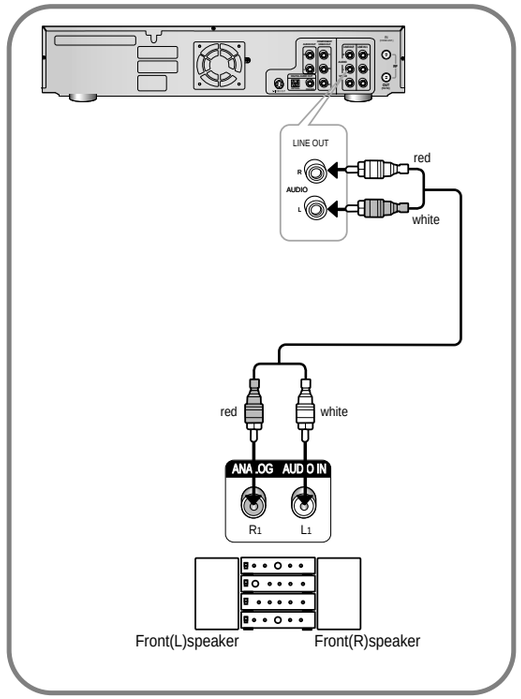

Method 2-2 : Connecting to a stereo amplifier and 2speakers(digital audio out)

If your stereo amplifier only has digital audio input jack,
use digital audio out jack. To enjoy Digital Output sound, you will set up the audio settings. (See page 34)

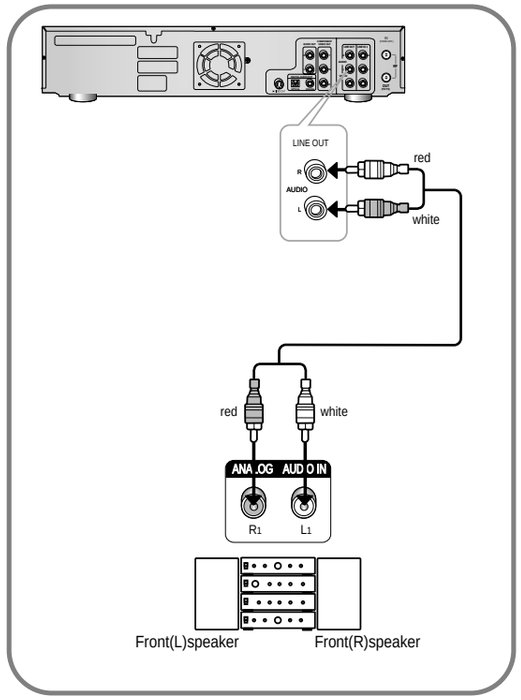

Connections

Step 4 : Connecting the Audio cable

Method 3-1 : Connecting to an AV amplifier with dolby surround decoder and 3 to 6speakers(audio out)

If your AV amplifier only has audio input jacks(L and R), use audio out jacks. You can enjoy Dolby sur-round effects only when dolby surround audio or multi-channel audio discs.

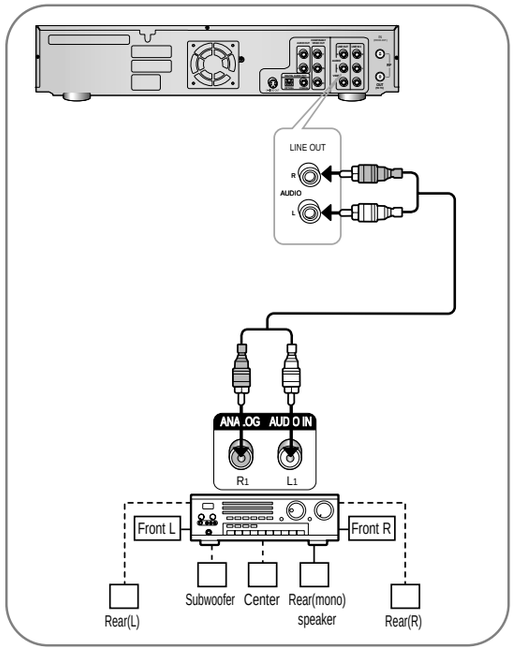

Method 3-2 : Connecting to an AV amplifier with dolby surround decoder and 3 to 6speakers(digital audio out)

If your AV amplifier only has DIGITAL audio input jack, use digital audio out jack. You can enjoy Dolby sur-round effects only when dolby surround audio or multi-channel audio discs. To enjoy Digital Output sound, you will set up the audio settings. (See page 34)

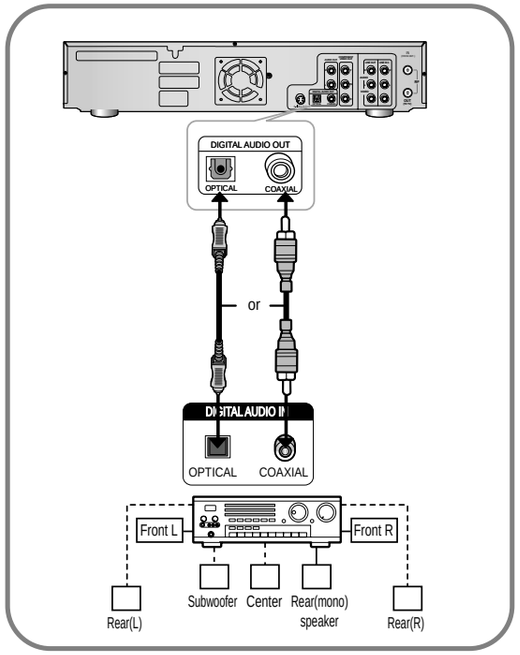

Method 4 : Connecting to an AV amplifier with a digital input jack and 6speakers

If your AV amplifier only has a Dolby Digital or DTS decorder and a digital input jack, use this connection. To enjoy Dolby Digital or DTS sound, you will set up the audio settings. (See page 34)

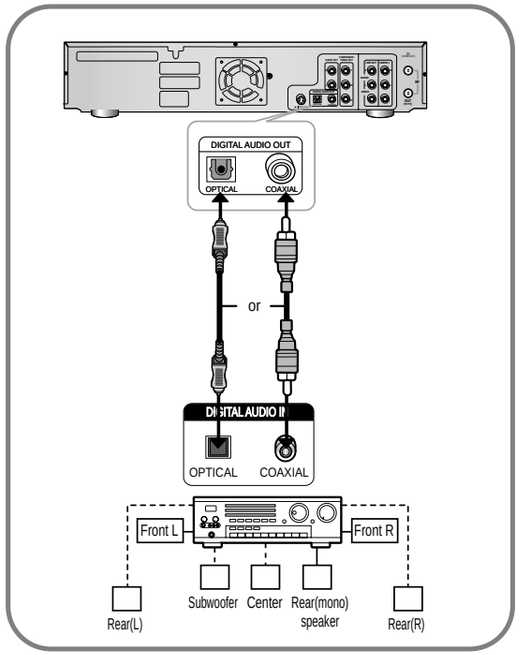

Step 5 : Connecting the external devices

This allows you to connect your DVD Recorder-VCR to other external devices and view or record their outputs.

- Method 1 : Connecting a VCR, Set-Top Box(STB) or DVD player to the AUDIO/VIDEO LINE IN 1 jacks
- Method 2 : Connecting a Camcorder to the LINE 2 in jacks
- Method 3 : Connecting to a Camcorder to the DV IN jack

Method 4 : Connecting a VCR, Settop Box(STB) or DVD player to the AUDIO/VIDEO L1 IN jacks

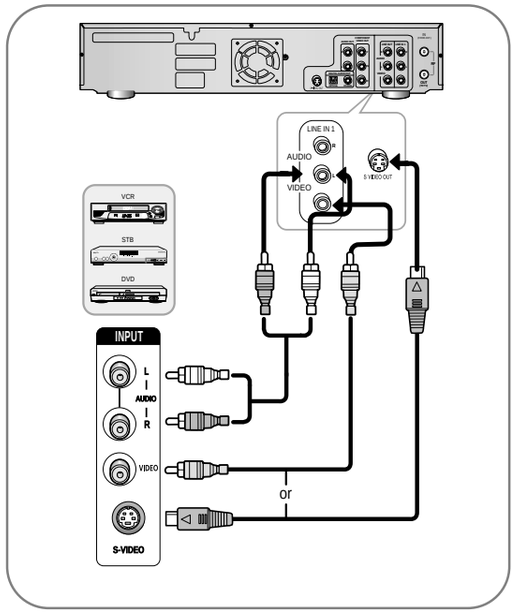

Step 5 : Connecting the external devices

Note

- You can also use the LINE IN 2 jacks on the front panel of the DVD Recorder-VCR-VCR.
  - When the S-Video jack and Video jack are connected at the same time, the S-Video jack will be selected first. Line Selection will be automatically done.
  - Picture containing copy protection signal that prohibit any copying cannot be recorded.

Method 2 : Connecting a Camcorder to the LINE 2 jacks

You can also use the LINE 2 IN jacks on the front panel of the DVD Recorder-VCR-VCR. You can recording from connected equipment.-see on page 69

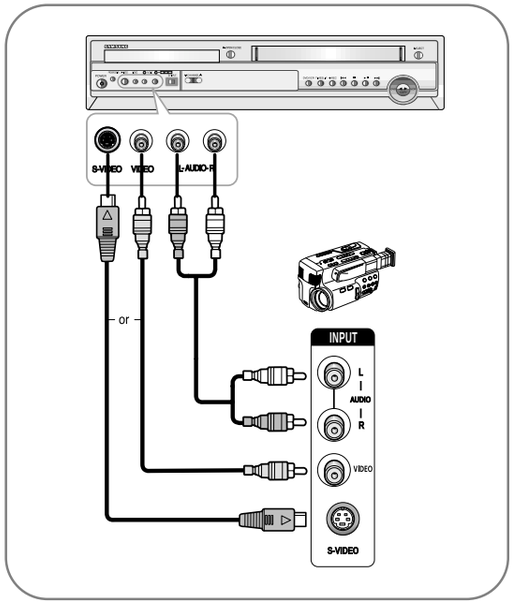

Method 3 : Connecting to a Camcorder to the DV IN jack

f your camcorder has a DV output jack, connect it to the DV input jack of your DVD Recorder-VCR.

- If your camcorder has a DV output jack, see page 69 for more information.

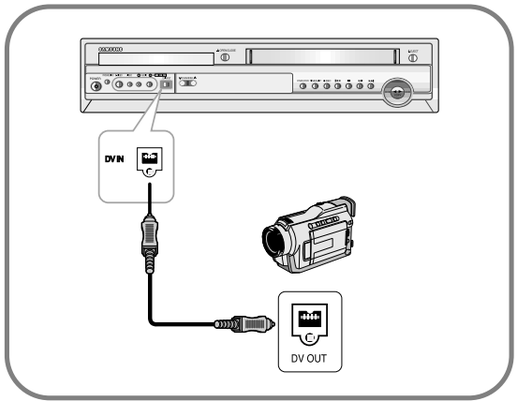

Step 6 : Connecting the Power Cord

Be sure to connect the power cord after all connections are complete.

Step 7 : Preparing the Remote Control

Install Batteries in the Remote

- Open the battery cover on the back of the remote.
- Insert two AAA batteries. Make sure that the polarities (+ and -) are aligned correctly.
- Replace the battery cover.

If remote doesn't operate properly:

- Check the polarity + - of the batteries (Dry-Cell)
- Check if the batteries are drained.
- Check if remote sensor is blocked by obstacles.
- Check if there is any fluorescent lighting nearby.

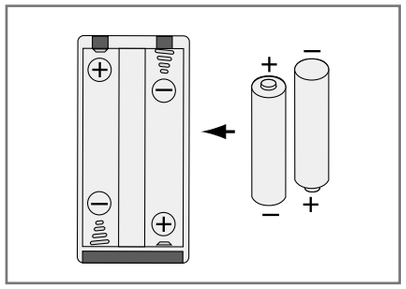

System Setup

On-Screen Menu Navigation

The on-screen menus allow you to enable or disable various functions on your DVD Recorder-VCR-VCR. Use the following buttons to open and navigate through the on-screen menus.

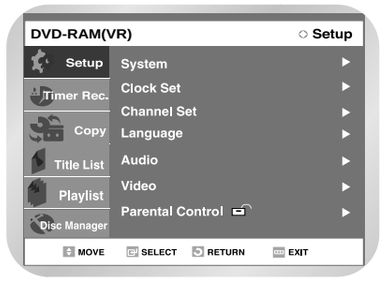

1 MENU Button

Press this button on the remote control while the DVD or VCR is in Stop or Play mode to open the on-screen MAIN MENU.

2 Up/Down and Left/Right

Use these buttons to move the selection bar up/down and left/right to cycle through the menu options.

3 Enter Button

Press this button on the remote control to confirm any new settings.

4 Return Button

Press this button on the remote control to return to the last MENU screen displayed or to exit the on-screen MENU all together.

Manual Clock Set

If Auto Setup fails to set the DVD Recorder-VCR-VCR's internal clock by locating a local TV station, follow these steps to set the date and time manually.
NOTE: For accurate Timer Recording, your DVD Recorder-VCR-VCR's internal clock must be set correctly.

1 Open "MENU"

Press the MENU button while the DVD or VCR is in Stop or Play mode.

2 Select "Setup"

Using the UP/DOWN buttons, move the selection bar to "Setup" then press ENTER to select.

3 Select "Clock Set"

Use the UP/DOWN buttons to highlight "Clock Set " then press the ENTER button.

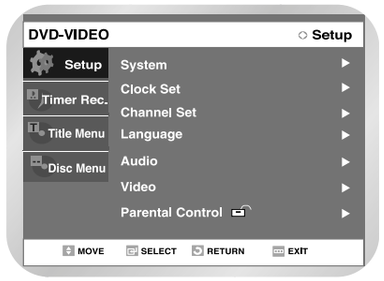

4 Select "Manual Clock Set"

Move the highlight to "Manual Clock Set", then press the ENTER button.
• The Clock Set will change as shown.

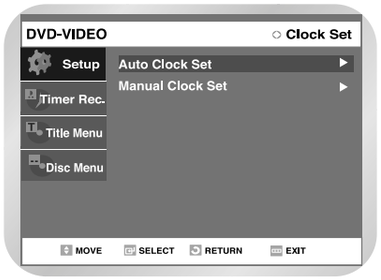

5 Set the Clock

Use the LEFT/RIGHT buttons to select each of the following options, then use the UP/DOWN buttons to set each option:
• **Month** – Set the month
• **Day** – Set the day.
• **Year** – Set the year
• **Hour** – Set the hour
• **Minute** – Set the minute
• **AM/PM** – Set the AM/PM

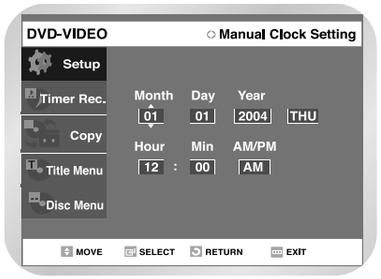

Setting Up the Language Features

If you set the player menu, disc menu, audio and subtitle language in advance, they will come up automatically every time you watch a movie.

1 With the unit in Stop mode, press the MENU button on the remote.

2 Select Setup using ▲▼ buttons, then press the ► or ENTER button.

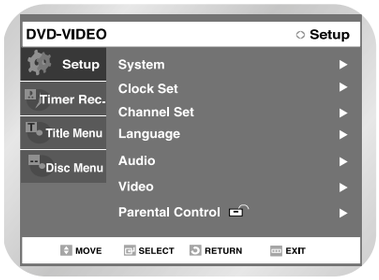

3 Select Language using ▲▼ buttons, then press the ► or ENTER button.
Language setup menu will be displayed.

4 Use ▲▼ buttons to select the desired sub menu and press the ENTER or ► button.

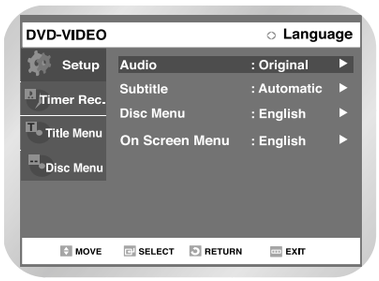

5 Select the desired Language using ▲▼ buttons, then press the ► or ENTER button.

■ Press the RETURN or ◄ button to return to the previous menu. Press the MENU button to exit the menu.

Setting Up the Audio Options

If you set the player menu, disc menu, audio and subtitle language in advance, they will come up automatically every time you watch a movie.

1 With the unit in Stop mode, press the MENU button on the remote.

2 Select Setup using ▲▼ buttons, then press the ► or ENTER button.

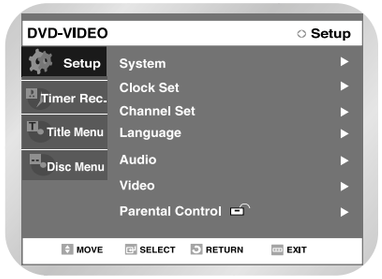

3 Select Language using ▲▼ buttons, then press the ► or ENTER button.
Language setup menu will be displayed.

4 Use ▲▼ buttons to select the desired sub menu and press the ENTER or ► button.

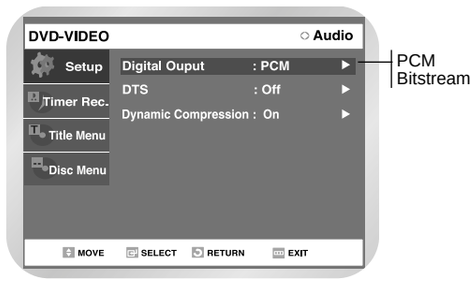

5 Use the ▲▼ buttons to select the desired item. Then press the RIGHT or ENTER button.

■ Press the RETURN or ◄ button to return to the previous menu. Press the MENU button to exit the menu.

Digital Output

1. PCM : Converts to PCM(2CH) 48kHz audio.Select PCM when using the Analog Audio Outputs.
2. Bitstream : Converts to Dolby Digital Bitstream (5.1CH). Select Bitstream when using the Digital Audio Output.

■ Be sure to select the correct Digital Output or no audio will be heard.

DTS

1. Off : Doesn't output digital signal.
2. On : Outputs DTS Bitstream via digital output only. Select DTS when connecting to a DTS Decoder.

Dynamic Compression

1. On : To select dynamic compression.
2. Off : To select the standard range.

Setting Up the Display(Video) Options

This function allows you to setup the TV screen settings.

1 With the unit in Stop mode, press the MENU button on the remote.
You can't use the Setup functions during playback.

2 Select Setup using ▲▼ buttons, then press the ► or ENTER button.

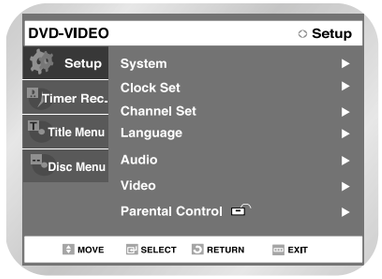

3 Select Video using ▲▼ buttons, then press the ► or ENTER button.
Video option menu will be displayed.

4 select the sub menu using ▲▼ buttons, then press the ► or ENTER button.

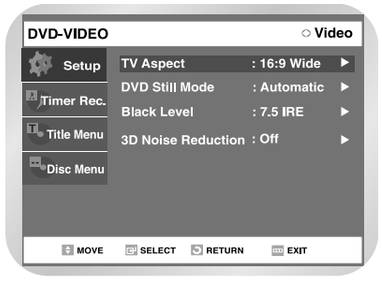

5 Use the ▲▼ buttons to select the desired item. Then press the RIGHT or ENTER button.

Note
■ Press the RETURN or ◄ button to return to the previous menu. Press the MENU button to exit the menu.

Display(Video) Options

This function depends on disc type. It may not work for some disc types.

TV Aspect
Depending on the type of television you have, you may want to adjust the screen setting. (aspect ratio)
- 4:3 letterBox : Select when you want to see the total 16:9 ratio screen DVD supplies, even though you have a TV with a 4:3 ratio screen. Black bars will appear at the top and bottom of the screen.
- 4:3 pan - Scan : Select this for conventional size TV when you want to see the central portion of the 16:9 screen. (Extreme left and right side of movie picture will be cut off.)
- 16:9 wide : You can view the full 16:9 picture on your widescreen TV.

Still Mode
Prevent picture shaking in still mode and display small text clearer.
- **Automatic** : When selecting Auto, Field/Frame mode will be automatically converted.
- **Field** : Select this feature when the screen shakes in the Auto mode.
- **Frame** : Select this feature when you want to see small letters more clearly in the Auto mode.

Black Level
Adjusts the brightness of the screen.
- **0 IRE** : This is the standard NTSC reference black level for consistent brightness/contrast across all source.
- **7.5 IRE** : This will enhance the black level for increased brightness/contrast when viewing DVDs.

3D NR(Noise Reduction)
- **On** : Select to remove noise from the screen
- **Off**

Setting Up the Parental Control

The Parental Control function works in conjunction with DVDs that have been assigned a rating - which helps you control the types of DVDs that your family watches. There are up to 8 rating levels on a disc.

1 With the unit in Stop mode, press the MENU button on the remote.

2 Select Setup using ▲▼ buttons, then press the ► or ENTER button.

3 Select Parental control using ▲▼ buttons, then press the ► or ENTER button.
- When you operate your DVD Recorder-VCR for the first time, the User Password screen will be displayed.
Press the ENTER button and the 'Create the password.' message will be displayed.

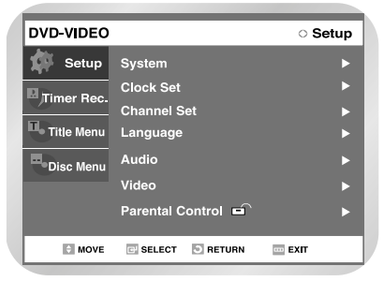

4 Enter the 4-digit password using the 0 to 9 buttons on the remote.
- The 'Confirm the password.' message will be displayed. Enter your password again.

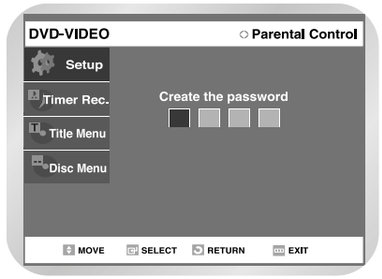

5 Select Password ON/OFF using ► and ▲▼ buttons.

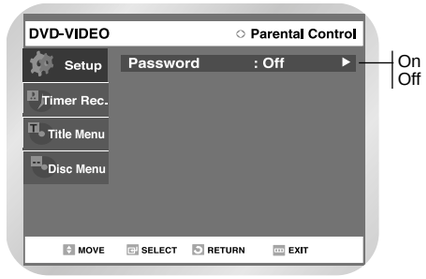

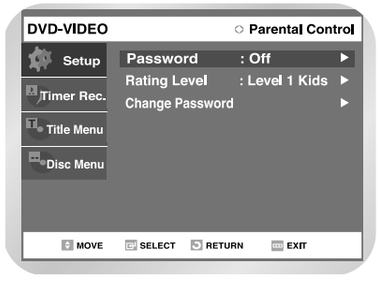

Setting Up the Parental Control

6 Select Rating Level you want using ▲▼ buttons, then press the ► or ENTER button.
- For example, if you select up to Level 6, discs that contain Level 7, 8 will not play. Larger number indicates the program is more intended to adult use only

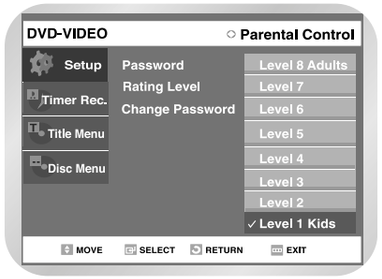

Note
- Press the RETURN or ◄ button to return to the previous menu. Press the MENU button to exit the menu.
- See Troubleshooting page if you forget your password.

About the Change Password;

1 Select Change Password using ▲▼ buttons, then press the ► or ENTER button.
- The 'Enter the password.' message will be displayed.

2 Enter the 4-digit password using the 0 to 9 buttons on the remote.
- The 'Confirm the password.' message will be displayed.

3 Enter your password again using the 0 to 9 buttons on the remote.

Note
- Press the RETURN or ◄ button to return to the previous menu. Press the MENU button to exit the menu.

Channel Set

This feature allows you to manually set the DVD Recorder-VCR-VCR's tuner band to Antenna or Cable, whichever you connected to the Antenna In jack during initial setup.
- Use this setting only if Auto Setup detected the incorrect tuner band, i.e. channels are coming in on the wrong channel numbers.

1 Open "MENU"

With the DVD in Stop or Play mode, press the MENU button.

2 Select "Setup"

Using the UP/DOWN buttons, move the selection bar to "Setup" then press ENTER to select.

3 Select "Channel Set"

Using the UP/DOWN buttons, move the selection bar to "Channel Set", then press ENTER to select.

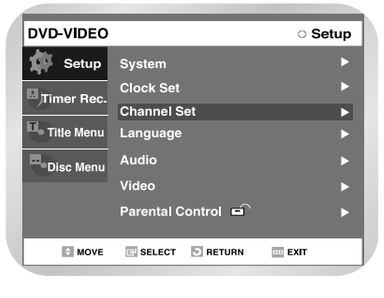

Channel Set

4 Select "Antenna/Cable TV"

Move the selection arrow to "Antenna/Cable TV" then press right button to select from the following options:
- Antenna - Indicates that the DVD Recorder-VCR-VCR is connected to an indoor or outdoor VHF/UHFantenna.
- Cable TV - Indicates that the DVD Recorder-VCR-VCR is connected to Cable TV.
- Cable TV - Indicates that the DVD Recorder-VCR-VCR is connected to Cable TV.

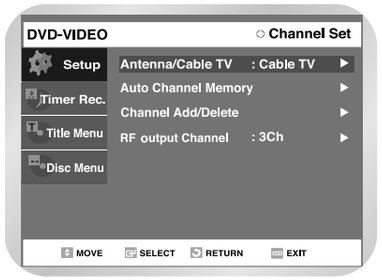

Auto Channel Memory

Auto Channel Memory will automatically seek and store all active channels in your area.

1 Open "MENU"

With the DVD in stop mode, press the MENU button.

2 Select "SETUP"

Using the UP/DOWN buttons, move the selection bar to "Setup" then press ENTER to select.

3 Select "Channel Set"

Using the UP/DOWN buttons, move the selection bar to "Channel Set", then press ENTER to select.

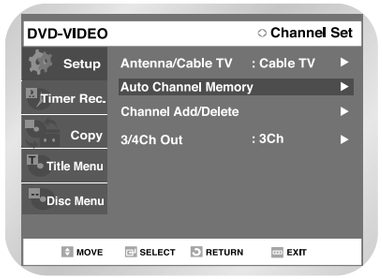

4 Run "Auto channel memory"

Move the selection arrow to "Auto Channel Memory," then press ENTER to select.
- The DVD Recorder-VCR-VCR will automatically search for all available channels in the selected Tuner Band. This procedure may take a few minutes to complete.
- When finished, the lowest channel found will be displayed.

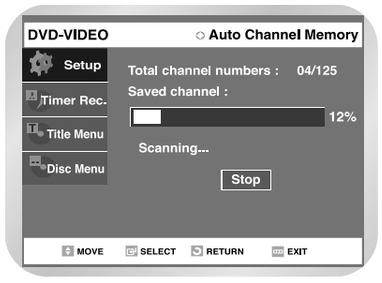

- Press ENTER button to STOP or cancle scanning.

Channel Add/Delete

Use this feature if Auto Channel Search missed a channel that you would like to add and delete a channel you wish to remove.

1 Open "MENU"

With the DVD in stop mode, press the MENU button.

2 Select "Setup"

Using the UP/DOWN buttons, move the selection bar to "Setup" then press ENTER to select.

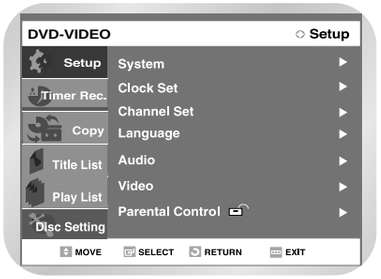

3 Select "Channel Set"

Using the UP/DOWN buttons, move the selection bar to "Channel Set", then press Enter to select.

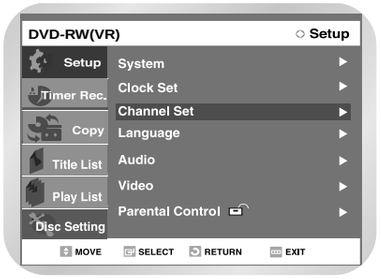

4 Select "Channel Add/Delete"

Move the selection bar to "Channel Add/Delete," then press ENTER to select.

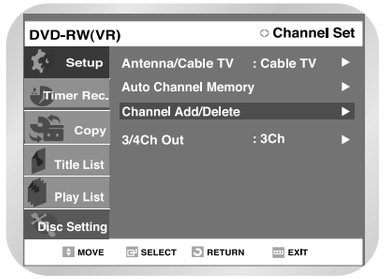

5 Select Channel to Add/Delete

Use the CH ∧/∨ buttons to tune in the channel number you wish to add or delete. Use the numeric number button to move the channel directly. if you use the navigation ∧/∨ button, the channel will be moved to the next memorized channel.

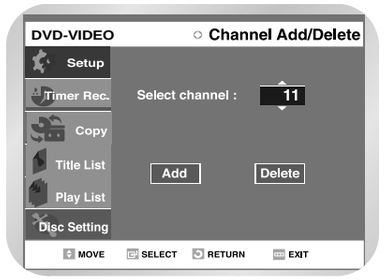

Channel Add/Delete

6 Add/Delete Channel.

Press Enter to move cursor and select add or Delete, then press enter.

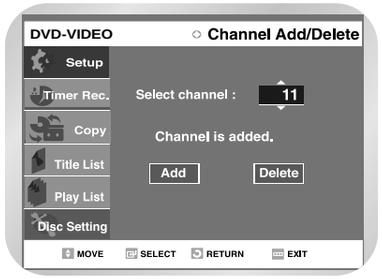

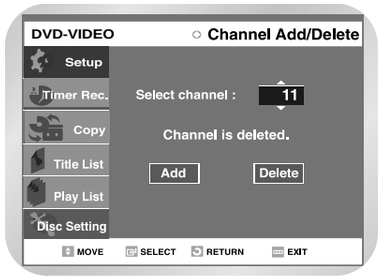

RF Output Channel

When you connect DVD Recorder-VCR-VCR to TV with RF Antenna Cable, Use this option. You can watch throuth Ch 3 or 4.

1 Open "MENU"

With the DVD in Stop or Play mode, press the MENU button.

2 Select "Setup"

Using the UP/DOWN buttons, move the selection bar to "Setup" then press ENTER to select.

3 Select "Channel Set"
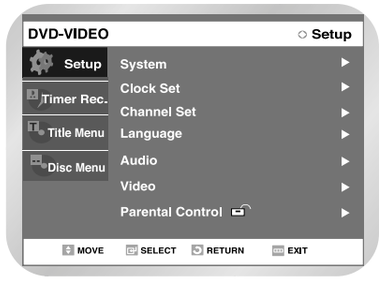
Using the UP/DOWN buttons, move the selection bar to "Channel Set," then press ENTER to select.