# TEST REPORT

**of**

FCC Part 15 Subpart C §15.247 / RSS-210 Issue 8, RSS-Gen Issue 3

FCC ID / IC Certification: A3LEJ-CT800 / 649E-EJCT800

| | | |
|---|---|---|
| Equipment Under Test | : | Galaxy Tab S 10.5 Bluetooth Keyboard |
| Model Name | : | EJ-CT800 |
| Applicant | : | Samsung Electronics Co., Ltd. |
| Manufacturer | : | Samsung Electronics Co., Ltd. |
| Date of Test(s) | : | 2014.05.23 ~ 2014.06.09 |
| Date of Issue | : | 2014.06.09 |

In the configuration tested, the EUT complied with the standards specified above.

| | | | |
|---|---|---|---|
| **Tested By:** | **Alvin Kim** | **Date:** | **2014.06.09** |
| **Approved By:** | **Hyunchae You** | **Date:** | **2014.06.09** |

*The results shown in this test report refer only to the sample(s) tested unless otherwise stated. This test report cannot be reproduced, except in full, without prior written permission of the Company.*

# INDEX

Table of Contents Page

1. General Information ---------- 3

2. Transmitter Radiated Spurious Emissions and Conducted Spurious Emission ------ 7

3. 20 dB Bandwidth and 99 % BW ---------- 23

4. Maximum Peak Output Power ---------- 29

5. Hopping Channel Separation ---------- 31

6. Number of Hopping Frequency ---------- 33

7. Time of Occupancy(Dwell Time) ---------- 36

8. Transmitter AC Power Line Conducted Emission---------- 43

9. Antenna Requirement ---------- 48

*The results shown in this test report refer only to the sample(s) tested unless otherwise stated. This test report cannot be reproduced, except in full, without prior written permission of the Company.*

# 1. General Information

## 1.1. Testing Laboratory

SGS Korea Co., Ltd. (Gunpo Laboratory)
- Wireless Div. 3FL, 4, LS-ro 182beon-gil, Gunpo-si, Gyeonggi-do, Korea, 435-040

All SGS services are rendered in accordance with the applicable SGS conditions of service available on request and accessible at http://www.sgs.com/en/Terms-and-Conditions.aspx.

Telephone : +82 31 428 5700
FAX : +82 31 427 2370

## 1.2. Details of Applicant

Applicant : Samsung Electronics Co., Ltd.
Address : 129, Samsung-ro, Yeongtong-gu, Suwon-si, Gyeonggi-do, Republic of Korea
Contact Person : Cho, Ha-Yeon
Phone No. : +82 31 8062 5071

## 1.3. Description of EUT

| | |
|---|---|
| **Kind of Product** | Galaxy Tab S 10.5 Bluetooth Keyboard |
| **Model Name** | EJ-CT800 |
| **Power Supply** | DC 3.7 V |
| **Frequency Range** | 2 402 ㎒ ~ 2 480 ㎒ (BT) |
| **Modulation Technique** | GFSK |
| **Number of Channels** | 79 channels |
| **Antenna Type** | PCB Pattern Antenna Type |
| **Antenna Gain** | 4.69 ㏈i |

## 1.4. Declaration by the manufacturer

- Adaptive Frequency Hopping is supported and use at least 20 channels.
- The modulation type of this Bluetooth device is only GFSK.

*The results shown in this test report refer only to the sample(s) tested unless otherwise stated. This test report cannot be reproduced, except in full, without prior written permission of the Company.*

## 1.5. Information about the FHSS characteristics:

### 1.5.1. Pseudorandom Frequency Hopping Sequence

The channel is represented by a pseudo-random hopping sequence hopping through the 79 RF channels. The hopping sequence is unique for the piconet and is determined by the Bluetooth device address of the master; the phase in the hopping sequence is determined by the Bluetooth clock of the master. The channel is divided into time slots where each slot corresponds to an RF hop frequency. Consecutive hops correspond to different RF hop frequencies. The nominal hop rate is 1 600 hops/s.

### 1.5.2. Equal Hopping Frequency Use

All Bluetooth units participating in the piconet are time and hop-synchronized to the channel.

### 1.5.3. Example of a 79 hopping sequence in data mode:

40, 21, 44, 23, 42, 53, 46, 55, 48, 33, 52, 35, 50, 65, 54, 67,
56, 37, 60, 39, 58, 69, 62, 71, 64, 25, 68, 27, 66, 57, 70, 59,
72, 29, 76, 31, 74, 61, 78, 63, 01, 41, 05, 43, 03, 73, 07, 75,
09, 45, 13, 47, 11, 77, 15, 00, 64, 49, 66, 53, 68, 02, 70, 06,
01, 51, 03, 55, 05, 04

### 1.5.4. System Receiver Input Bandwidth

Each channel bandwidth is 1 ㎒

### 1.5.5. Equipment Description

15.247(a)(1) that the rx input bandwidths shift frequencies in synchronization with the transmitted

15.247(g): In accordance with the Bluetooth Industry Standard, the system is designed to comply with all of the regulations in Section 15.247 when the transmitter is presented with a continuous data (or information) system.

15.247(h): In accordance with the Bluetooth Industry Standard, the system does not coordinate it channels selection/ hopping sequence with other frequency hopping systems for the express purpose of avoiding the simultaneous occupancy of individual hopping frequencies by multiple transmitters.

*The results shown in this test report refer only to the sample(s) tested unless otherwise stated. This test report cannot be reproduced, except in full, without prior written permission of the Company.*

## 1.6. Test Equipment List

| Equipment | Manufacturer | Model | S/N | Cal Date | Cal Interval | Cal Due. |
|---|---|---|---|---|---|---|
| Signal Generator | R&S | SMR40 | 100272 | Aug. 10, 2013 | Annual | Aug. 10, 2014 |
| Spectrum Analyzer | Agilent | N9030A | US51350132 | Oct. 08, 2013 | Annual | Oct. 08, 2014 |
| Spectrum Analyzer | R&S | FSV30 | 100768 | Mar. 27, 2014 | Annual | Mar. 27, 2015 |
| Directional Coupler | KRYTAR | 152613 | 127447 | Mar. 24, 2014 | Annual | Mar. 24, 2015 |
| Bluetooth Tester | TESCOM | TC-3000C | 3000C000142 | Dec. 12, 2013 | Annual | Dec. 12, 2014 |
| High Pass Filter | Wainwright | WHK3.0/18G-6SS | 4 | Jul. 02, 2013 | Annual | Jul. 02, 2014 |
| High Pass Filter | Wainwright | WHNX7.5/26.5G-6SS | 15 | Jul. 03, 2013 | Annual | Jul. 03, 2014 |
| Low Pass Filter | Mini-Circuits | NLP-1200+ | V 8979400903-1 | Jun. 12, 2013 | Annual | Jun. 12, 2014 |
| Power Sensor | R&S | NRP-Z81 | 100669 | Mar. 19, 2014 | Annual | Mar. 19, 2015 |
| DC power Supply | Agilent | U8002A | MY49030063 | Dec. 12, 2013 | Annual | Dec. 12, 2014 |
| Preamplifier | H.P. | 8447F | 2944A03909 | Jun. 28, 2013 | Annual | Jun. 28, 2014 |
| Preamplifier | R&S | SCU 18 | 1391123 | Sep. 30, 2013 | Annual | Sep. 30, 2014 |
| Preamplifier | MITEQ Inc. | JS44-18004000-35-8P | 1546891 | Apr. 28, 2014 | Annual | Apr. 28, 2015 |
| Test Receiver | R&S | ESCI 7 | 100911 | Jan. 24, 2014 | Annual | Jan. 24, 2015 |
| Two-Line V-Network | R&S | ENV216 | 100190 | Jan. 02, 2014 | Annual | Jan. 02, 2015 |
| Test Receiver | R&S | ESU26 | 100109 | Mar. 04, 2014 | Annual | Mar. 04, 2015 |
| Bilog Antenna | SCHWARZBECK | VULB9163 | 396 | Jun. 07, 2013 | Biennial | Jun. 07, 2015 |
| Horn Antenna | SCHWARZBECK | BBHA9170 | BBHA9170431 | May 15, 2014 | Biennial | May 15, 2016 |
| Horn Antenna | R&S | HF906 | 100326 | Dec. 10, 2013 | Biennial | Dec. 10, 2015 |
| Loop Antenna | R&S | HFH2-Z2 | 100118 | Jul. 12, 2013 | Biennial | Jul. 12, 2015 |
| Antenna Master | INN-CO | MM4000 | N/A | N/A | N/A | N.C.R. |
| Turn Table | INN-CO | DS 1200 S | N/A | N/A | N/A | N.C.R. |
| Anechoic Chamber | SY Corporation | L × W × H (9.6 m × 6.4 m × 6.6 m) | N/A | N/A | N/A | N.C.R. |

*The results shown in this test report refer only to the sample(s) tested unless otherwise stated. This test report cannot be reproduced, except in full, without prior written permission of the Company.*

## 1.7. Summary of Test Results

The EUT has been tested according to the following specifications:

| APPLIED STANDARD:FCC Part15 subpart C, RSS-210, RSS-Gen | | | |
|---|---|---|---|
| **Section in FCC 15** | **Section in RSS-210** | **Test Item** | **Result** |
| 15.205(a)<br>15.209<br>15.247(d) | A8.5 | Transmitter Radiated Spurious Emissions<br>Conducted Spurious Emission | Complied |
| 15.247(a)(1) | RSS-210 A8.1(a)<br>RSS-Gen 4.6.1 | 20 dB Bandwidth and 99% BW | Complied |
| 15.247(b)(1) | A8.4(2) | Maximum Peak Output Power | Complied |
| 15.247(a)(1) | A8.1(b) | Frequency Separation | Complied |
| 15.247(a)(1)(iii) | A8.4(d) | Number of Hopping Frequency | Complied |
| 15.247(a)(1)(iii) | A8.1(d) | Time of Occupancy<br>(Dwell Time) | Complied |
| 15.207 | RSS-Gen 7.2.2 | Transmitter AC Power Line Conducted Emission | Complied |

## 1.8. Sample calculation

Where relevant, the following sample calculation is provided:

### 1.8.1. Conducted test

Offset value (dB) = Directional Coupler(dB) + Cable loss (dB)

### 1.8.2. Radiation test

Field strength level (dBμV/m) = Measured level (dBμV) + Antenna factor (dB) + Cable loss (dB) – amplifier gain (dB)

## 1.9. Test report revision

| Revision | Report number | Date of Issue | Description |
|---|---|---|---|
| 0 | F690501/RF-RTL007686 | 2014.05.28 | Initial |
| 1 | F690501/RF-RTL007686-1 | 2014.06.09 | Added Transmitter AC power line conducted emission. |

*The results shown in this test report refer only to the sample(s) tested unless otherwise stated. This test report cannot be reproduced, except in full, without prior written permission of the Company.*

# 2. Transmitter Radiated Spurious Emissions and Conducted Spurious Emission

## 2.1. Test Setup

### 2.1.1. Transmitter Radiated Spurious Emissions

The diagram below shows the test setup that is utilized to make the measurements for emission from 9 ㎑ to 30 ㎒ Emissions.

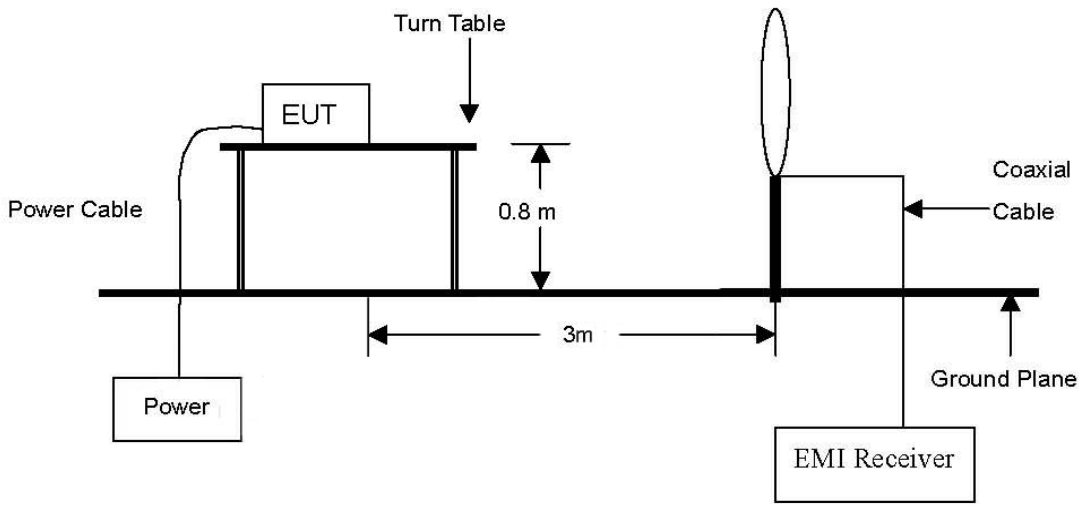


The diagram below shows the test setup that is utilized to make the measurements for emission from 30 ㎒ to 1 ㎓ Emissions.

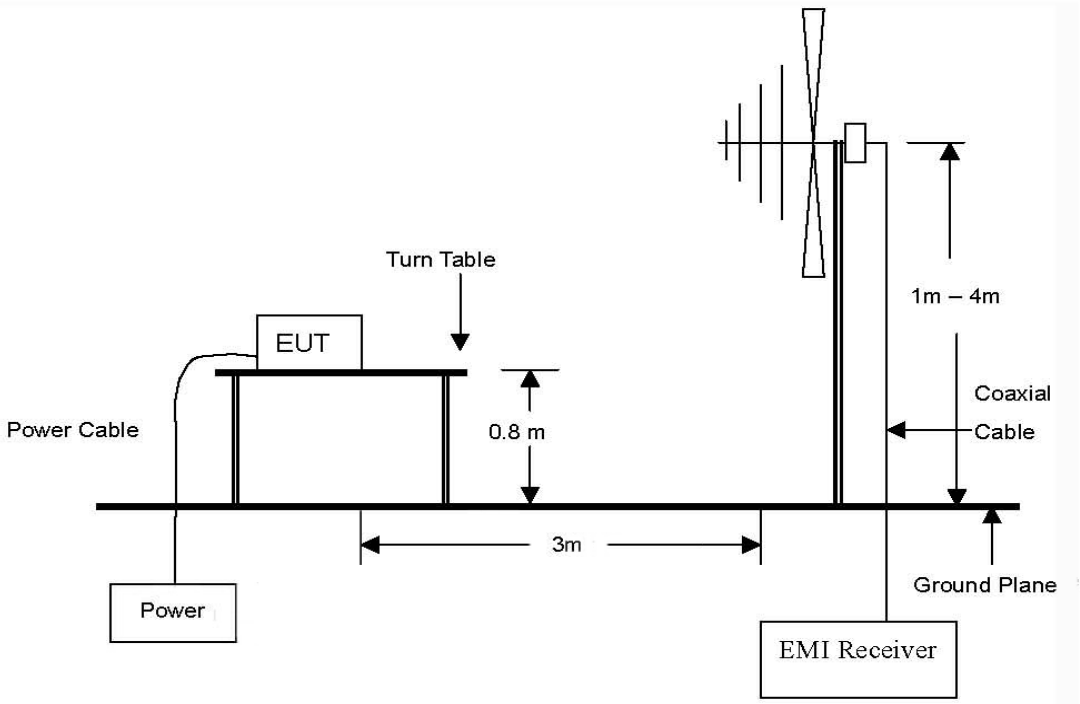

The diagram below shows the test setup that is utilized to make the measurements for emission .The spurious emissions were investigated form 1 ㎓ to the 10th harmonic of the highest fundamental frequency or 40 ㎓, whichever is lower.

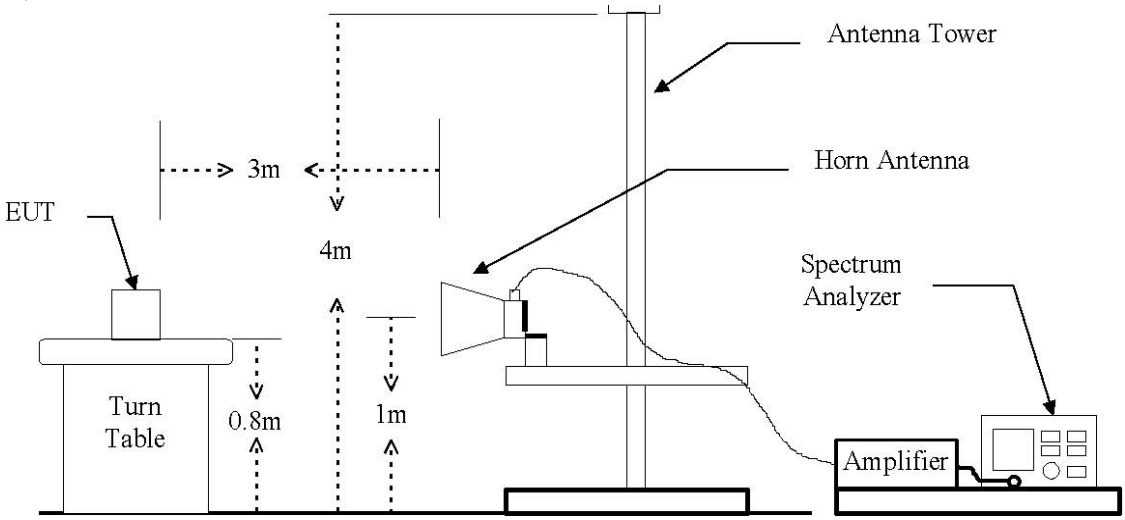


### 2.1.2. Conducd Spurious Emissions

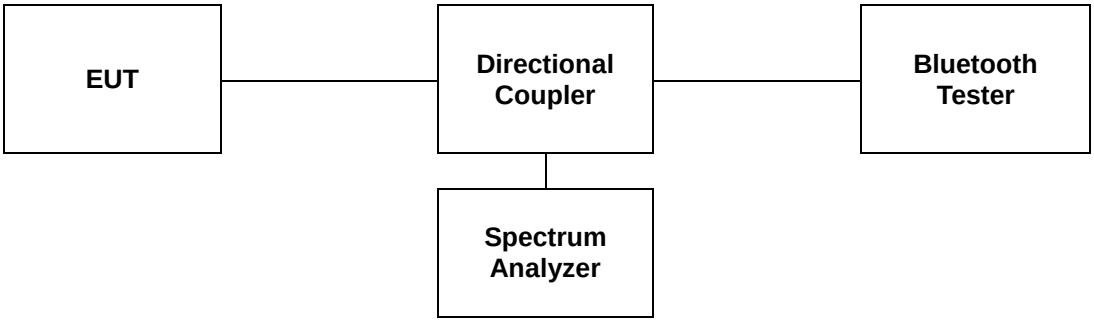


*The results shown in this test report refer only to the sample(s) tested unless otherwise stated. This test report cannot be reproduced, except in full, without prior written permission of the Company.*

## 2.2. Limit

According to §15.247(d), in any 100 ㎑ bandwidth outside the frequency band in which the spread spectrum or digitally modulated intentional radiator is operating, the radio frequency power that is produced by the intentional radiator shall be at least 20 ㏈ below that in the 100 ㎑ bandwidth within the band that contains the highest level of the desired power, based on either an RF conducted or a radiated measurement , provided the transmitter demonstrates compliance with the peak conducted power limits. If the transmitter complies with the conducted power limits based on the use of RMS averaging over a time interval , as permitted under paragraph(b)(3) of this section , the attenuation required under this paragraph shall be 30 ㏈ instead of 20 ㏈. Attenuation below the general limits specified in section §15.209(a) is not required. In addition, radiated emission which in the restricted band, as define in section §15.205(a), must also comply the radiated emission limits specified in section §15.209(a) (see section §15.205(c))

According to § 15.209(a), Except as provided elsewhere in this Subpart, the emissions from an intentional radiator shall not exceed the field strength levels specified in the following table：

| Frequency (㎒) | Distance (Meters) | Field Strength (㏈㎶/m) | Field Strength (㎶/m) |
|---|---|---|---|
| 0.009 – 0.490 | 300 | 20 log (2 400/F(㎑)) | 2 400/F(㎑) |
| 0.490 – 1.705 | 30 | 20 log (24 000/F(㎑)) | 24 000/F(㎑) |
| 1.705 – 30.0 | 30 | 29.54 | 30 |
| 30 - 88 | 3 | 40.0 | 100 |
| 88 – 216 | 3 | 43.5 | 150 |
| 216 – 960 | 3 | 46.0 | 200 |
| Above 960 | 3 | 54.0 | 500 |

*The results shown in this test report refer only to the sample(s) tested unless otherwise stated. This test report cannot be reproduced, except in full, without prior written permission of the Company.*

## 2.3. Test Procedures

Radiated emissions from the EUT were measured according to the dictates of DA000705, ANSI C63.4-2003

### 2.3.1. Test Procedures for emission below 30 ㎒

1. The EUT was placed on the top of a rotating table 0.8 meters above the ground at a 3 meter anechoic chamber test site. The table was rotated 360 degrees to determine the position of the highest radiation.
2. Then antenna is a loop antenna is fixed at one meter above the ground to determine the maximum value of the field strength. Both parallel and perpendicular of the antenna are set to make the measurement.
3. For each suspected emission, the EUT was arranged to its worst case and then the table was turned from 0 degrees to 360 degrees to find the maximum reading.
4. The test-receiver system was set to average or quasi peak detect function and Specified Bandwidth with Maximum Hold Mode.

### 2.3.2. Test Procedures for emission from above 30 ㎒

1. The EUT was placed on the top of a rotating table 0.8 meters above the ground at a 3 meter anechoic chamber test site. The table was rotated 360 degrees to determine the position of the highest radiation.
2. During performing radiated emission below 1 ㎓, the EUT was set 3 meters away from the interference receiving antenna, which was mounted on the top of a variable-height antenna tower. During performing radiated emission above 1 ㎓, the EUT was set 3 meter away from the interference-receiving antenna.
3. The antenna is a bi-log antenna, a horn antenna and its height is varied from one meter to four meters above the ground to determine the maximum value of the field strength. Both horizontal and vertical polarizations of the antenna are set to make the measurement.
4. For each suspected emission, the EUT was arranged to its worst case and then the antenna was tuned to heights from 1 meter to 4 meters and the table was turned from 0 degrees to 360 degrees to find the maximum reading.
5. The test-receiver system was set to Peak Detect Function and Specified Bandwidth with Maximum Hold Mode.
6. If the emission level of the EUT in peak mode was 10 ㏈ lower than the limit specified, then testing could be stopped and the peak values of the EUT would be reported. Otherwise the emissions that did not have 10 ㏈ margin would be re-tested one

NOTE;

All data rates and modes were investigated for radiated spurious emissions. Only the radiated emissions of the configuration that produced the worst case emissions are reported in this section.

1. The resolution bandwidth and video bandwidth of test receiver/spectrum analyzer is 120 ㎑ for Peak detection (PK) and Quasi-peak detection (QP) at frequency below 1 ㎓.
2. The resolution bandwidth and video bandwidth of test receiver/spectrum analyzer is 1 ㎒ for Peak detection and frequency above 1 ㎓.
3. The resolution bandwidth of test receiver/spectrum analyzer is 1 ㎒ and the video bandwidth is 1/T ㎐ for Average detection (AV) at frequency above 1 ㎓.
   VBW = 360 □ ≥ 1/T □, Where T is the bluetooth pulse width in seconds(T = 0.002 9 s).
   Refer to the DH5 of time of occupancy (dwell time) test item.
4. When Average result is different from peak result over 20 dB (over-averaging), According to 15.35 (c), as a “duty cycle correction factor”, pulse averaging with 20 log(duty cycle) has to be used.
5. To get a maximum emission level from the EUT, the EUT is manipulated through three orthogonal planes.

*The results shown in this test report refer only to the sample(s) tested unless otherwise stated. This test report cannot be reproduced, except in full, without prior written permission of the Company.*

## 2.3.2. Test Procedures for Conducted Spurious Emissions

### 2.3.2.1. Band-edge Compliance of RF Conducted Emissions

The transmitter output was connected to the spectrum analyzer.
Span = wide enough to capture the peak level of the emission operating on the channel closest to the bandedge, as well as any modulation products which fall outside of the authorized band of operation.

RBW ≥ 100 ㎑

VBW ≥ RBW

Sweep = auto
Detector function = peak
Trace = max hold

### 2.3.2.2. Spurious RF Conducted Emissions

The transmitter output was connected to the spectrum analyzer.
RBW = 100 ㎑

VBW ≥ RBW

Sweep = auto
Detector function = peak
Trace = max hold

*The results shown in this test report refer only to the sample(s) tested unless otherwise stated. This test report cannot be reproduced, except in full, without prior written permission of the Company.*

## 2.4. Test Results

Ambient temperature : (23 ± 1) ℃
Relative humidity : 47 % R.H.

### 2.4.1. Spurious Radiated Emission (Worst case configuration_GFSK mode, 1 Mbps, middle channel)

The frequency spectrum from 24 ㎒ to 1 000 ㎒ was investigated. Emission levels are not reported much lower than the limits by over 30 ㏈. All reading values are peak values.

| Radiated Emissions | | | Ant | Correction Factors | | Total | FCC Limit | |
|---|---|---|---|---|---|---|---|---|
| Frequency (㎒) | Reading (㏈㎶) | Detect Mode | Pol. | AF (㏈/m) | AMP + CL (㏈) | Actual (㏈㎶/m) | Limit (㏈㎶/m) | Margin (㏈) |
| 50.82 | 34.00 | Peak | H | 14.41 | -26.71 | 21.70 | 40.00 | 18.30 |
| 96.73 | 36.36 | Peak | H | 12.12 | -26.28 | 22.20 | 43.50 | 21.30 |
| 355.96 | 35.75 | Peak | V | 15.64 | -24.89 | 26.50 | 46.00 | 19.50 |
| Above 400.00 | Not detected | - | - | - | - | - | - | - |

Remark:

1. All spurious emissions at channels are almost the same below 1 ㎓, so that low channel was chosen at representative in final test.
2. Actual = Reading + AF + AMP + CL

### 2.4.2. Spurious Radiated Emission

The frequency spectrum above 1 000 ㎒ was investigated.

**Operating Mode : GFSK (1 Mbps)**

A. Low Channel (2 402 ㎒)

| Fundamental Level | | | Ant. | Correction Factors | | Total |
|---|---|---|---|---|---|---|
| Frequency (㎒) | Reading (dBμV) | Detect Mode | Pol. | AF (dB/m) | CL (dB) | Actual (dBμV/m) |
| 2 402.05 | 66.10 | Peak | H | 28.07 | 6.17 | 100.34 |

| Radiated Emissions | | | Ant | Correction Factors | | Total | FCC Limit | |
|---|---|---|---|---|---|---|---|---|
| Frequency (㎒) | Reading (dBμV) | Detect Mode | Pol. | AF (dB/m) | CL (dB) | Actual (dBμV/m) | Limit (dBμV/m) | Margin (dB) |
| *2 360.32 | 26.06 | Peak | H | 28.10 | 6.28 | 60.44 | 74.00 | 13.56 |
| *2 360.32 | 15.56 | Average | H | 28.10 | 6.28 | 49.94 | 54.00 | 4.06 |
| *2 390.00 | 25.27 | Peak | H | 28.08 | 6.25 | 59.60 | 74.00 | 14.40 |
| *2 390.00 | 15.45 | Average | H | 28.08 | 6.25 | 49.78 | 54.00 | 4.22 |

| Radiated Emissions | | | Ant | Correction Factors | | Total | FCC Limit | |
|---|---|---|---|---|---|---|---|---|
| Frequency (㎒) | Reading (dBμV) | Detect Mode | Pol. | AF (dB/m) | AMP+CL (dB) | Actual (dBμV/m) | Limit (dBμV/m) | Margin (dB) |
| *4 804.07 | 45.49 | Peak | H | 32.61 | -34.08 | 44.02 | 74.00 | 29.98 |
| *4 804.07 | 40.67 | Average | H | 32.61 | -34.08 | 39.20 | 54.00 | 14.80 |
| 7 206.13 | 35.16 | Peak | H | 35.79 | -34.63 | 36.32 | 80.34 | 44.02 |
| Above 7 300.00 | Not detected | - | - | - | - | - | - | - |

*The results shown in this test report refer only to the sample(s) tested unless otherwise stated. This test report cannot be reproduced, except in full, without prior written permission of the Company.*

B. Middle Channel (2 441 ㎒)

| Radiated Emissions | | | Ant | Correction Factors | | Total | FCC Limit | |
|---|---|---|---|---|---|---|---|---|
| Frequency (㎒) | Reading (dBμV) | Detect Mode | Pol. | AF (dB/m) | AMP+CL (dB) | Actual (dBμV/m) | Limit (dBμV/m) | Margin (dB) |
| *4 881.66 | 44.07 | Peak | H | 33.01 | -33.35 | 43.73 | 74.00 | 30.27 |
| *4 881.66 | 39.95 | Average | H | 33.01 | -33.35 | 39.61 | 54.00 | 14.39 |
| *7 323.25 | 44.66 | Peak | H | 36.24 | -35.95 | 44.95 | 74.00 | 29.05 |
| *7 323.25 | 40.92 | Average | H | 36.24 | -35.95 | 41.21 | 54.00 | 12.79 |
| Above 7 400.00 | Not detected | - | - | - | - | - | - | - |

*The results shown in this test report refer only to the sample(s) tested unless otherwise stated. This test report cannot be reproduced, except in full, without prior written permission of the Company.*

C. High Channel (2 480 ㎒)

| Radiated Emissions | | | Ant | Correction Factors | | Total | FCC Limit | |
|---|---|---|---|---|---|---|---|---|
| Frequency (㎒) | Reading (dBμV) | Detect Mode | Pol. | AF (dB/m) | CL (dB) | Actual (dBμV/m) | Limit (dBμV/m) | Margin (dB) |
| *2 483.50 | 25.29 | Peak | H | 28.17 | 6.27 | 59.73 | 74.00 | 14.27 |
| *2 483.50 | 16.05 | Average | H | 28.17 | 6.27 | 50.49 | 54.00 | 3.51 |
| *2 495.55 | 27.32 | Peak | H | 28.28 | 6.28 | 61.88 | 74.00 | 12.12 |
| *2 495.55 | 15.77 | Average | H | 28.28 | 6.28 | 50.33 | 54.00 | 3.67 |

| Radiated Emissions | | | Ant | Correction Factors | | Total | FCC Limit | |
|---|---|---|---|---|---|---|---|---|
| Frequency (㎒) | Reading (dBμV) | Detect Mode | Pol. | AF (dB/m) | AMP+CL (dB) | Actual (dBμV/m) | Limit (dBμV/m) | Margin (dB) |
| *4 959.64 | 41.83 | Peak | H | 33.16 | -34.04 | 40.95 | 74.00 | 33.05 |
| *4 959.64 | 36.04 | Average | H | 33.16 | -34.04 | 35.16 | 54.00 | 18.84 |
| *7 439.76 | 45.97 | Peak | H | 36.03 | -34.98 | 47.02 | 74.00 | 26.98 |
| *7 439.76 | 42.21 | Average | H | 36.03 | -34.98 | 43.26 | 54.00 | 10.74 |
| Above 7 500.00 | Not detected | - | - | - | - | - | - | - |

Remarks:
1. "*" means the restricted band.
2. Measuring frequencies from 1 ㎓ to the 10th harmonic of highest fundamental frequency.
3. Radiated emissions measured in frequency above 1 000 ㎒ were made with an instrument using peak/average detector mode if frequency was in the restricted band. Otherwise the frequency was out of restricted band, only peak detector should be used.
4. Emissions out of restricted band are limited below 20㏈ of fundamental level in 100㎑ resolution bandwidth.
5. Actual = Reading + AF + AMP + CL

*The results shown in this test report refer only to the sample(s) tested unless otherwise stated. This test report cannot be reproduced, except in full, without prior written permission of the Company.*

### 2.4.3. Spurious RF Conducted Emissions: Plot of Spurious RF Conducted Emission

**Operating Mode : GFSK(1 Mbps)**

Low Channel

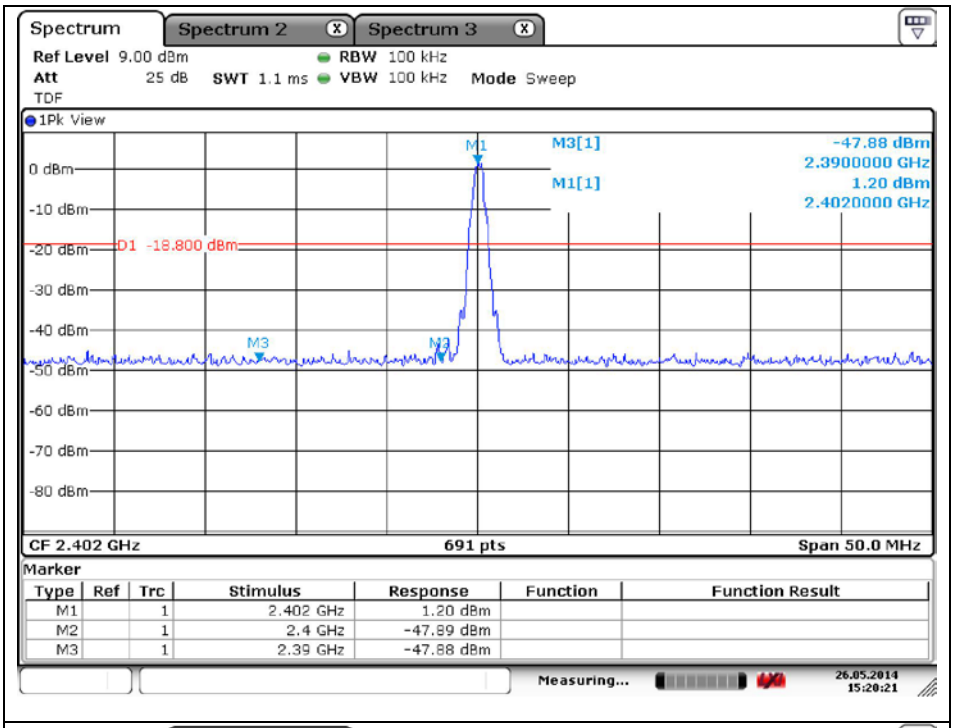


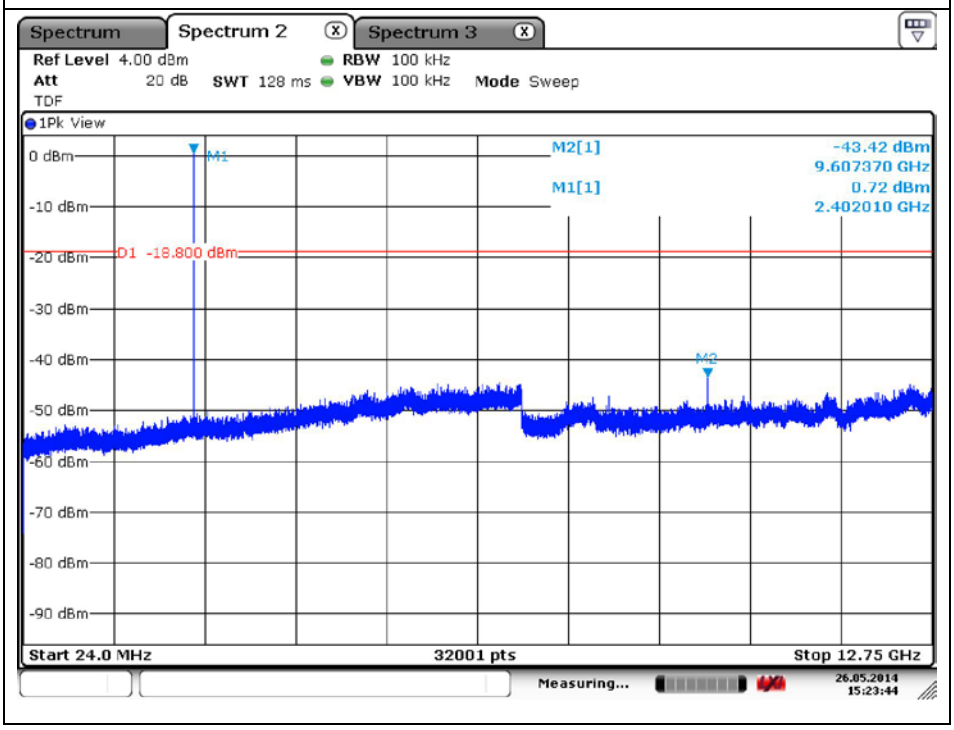

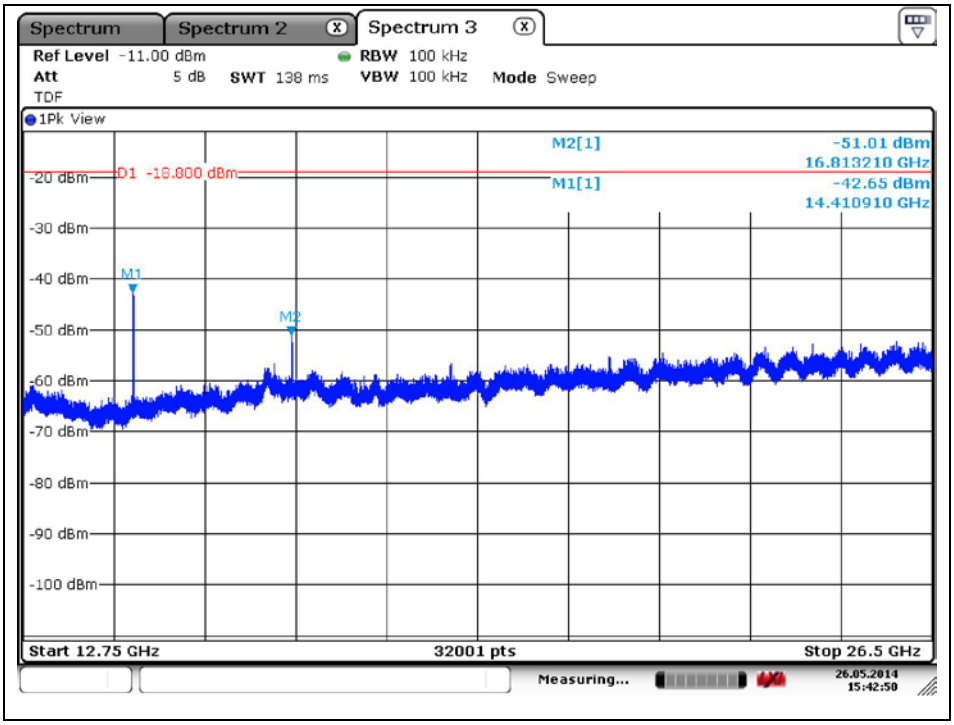
Spectrum
Spectrum 2
Spectrum 3
Ref Level -11.00 dBm
RBW 100 kHz
Att 5 dB
SWT 138 ms
VBW 100 kHz
Mode Sweep
TDF
1Pk View
M2[1] -51.01 dBm 16.813210 GHz
D1 -18.000 dBm
M1[1] -42.65 dBm 14.410910 GHz
-20 dBm
-30 dBm
-40 dBm
-50 dBm
-60 dBm
-70 dBm
-80 dBm
-90 dBm
-100 dBm
M1
M2
Start 12.75 GHz
32001 pts
Stop 26.5 GHz
Measuring...
26.05.2014
15:42:50

Middle Channel

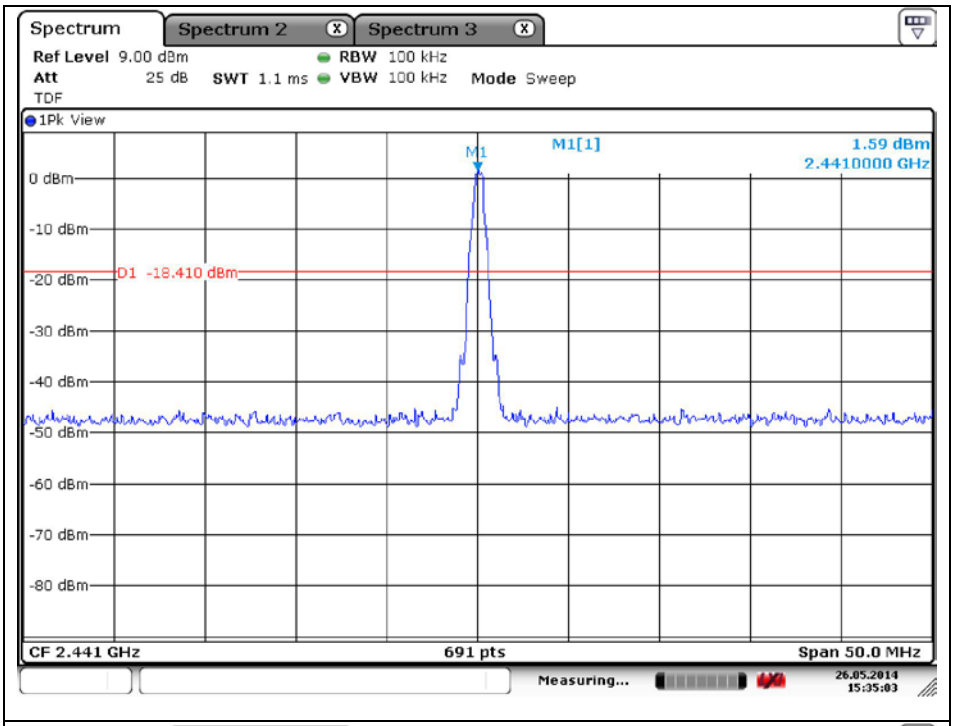


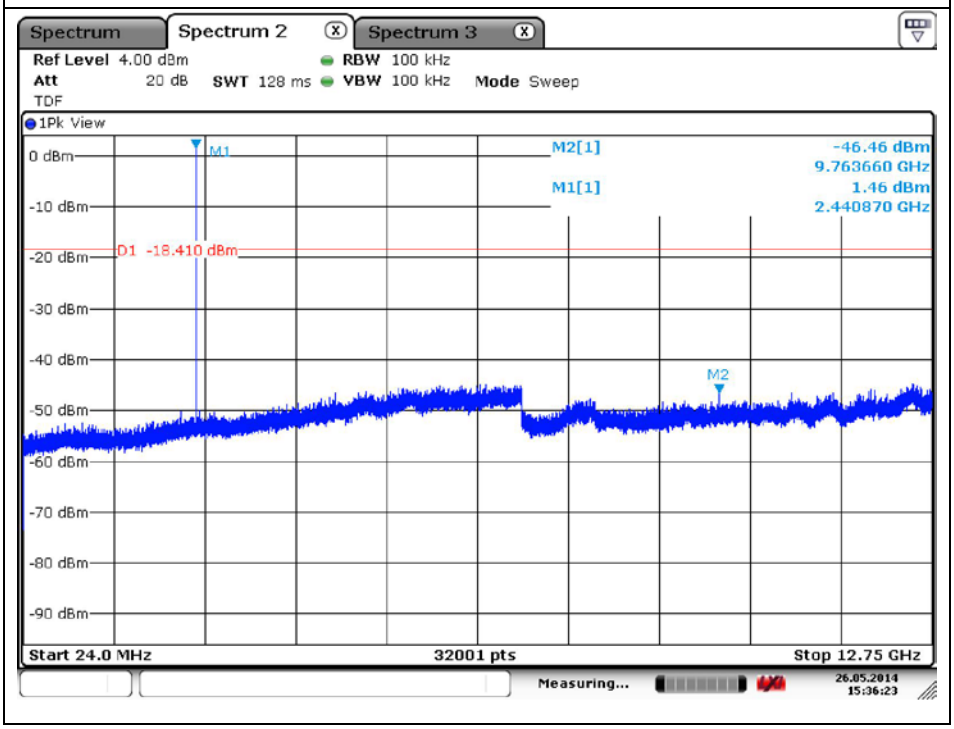


*The results shown in this test report refer only to the sample(s) tested unless otherwise stated. This test report cannot be reproduced, except in full, without prior written permission of the Company.*

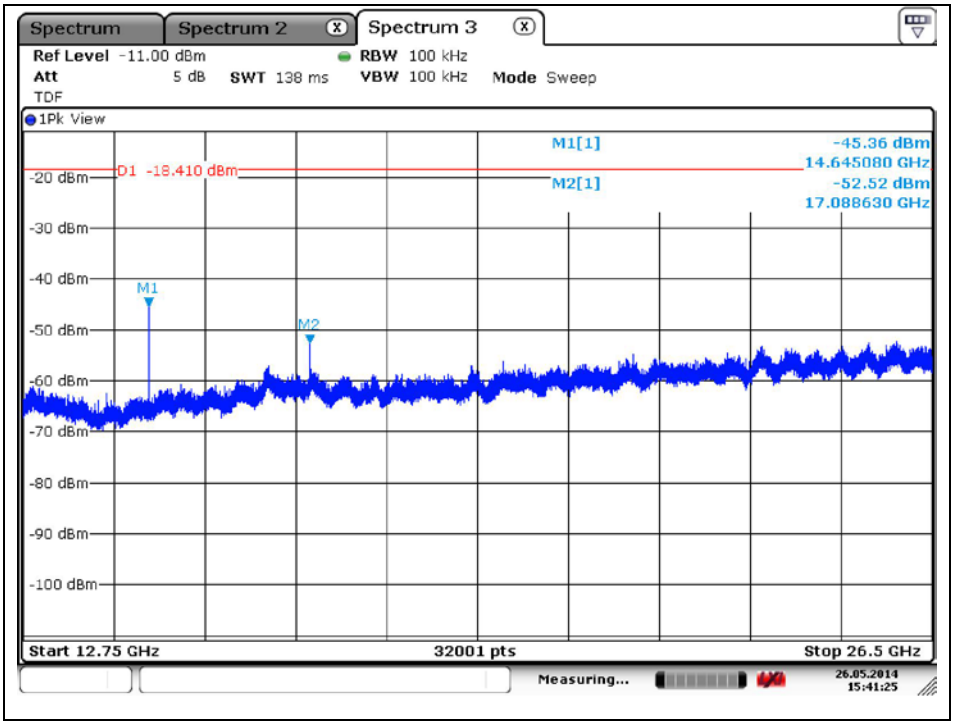
Spectrum
Spectrum 2
Spectrum 3
Ref Level -11.00 dBm
RBW 100 kHz
Att 5 dB
SWT 138 ms
VBW 100 kHz
Mode Sweep
TDF
1Pk View
M1[1] -45.36 dBm
14.645080 GHz
D1 -18.410 dBm
M2[1] -52.52 dBm
17.088630 GHz
-20 dBm
-30 dBm
-40 dBm
-50 dBm
-60 dBm
-70 dBm
-80 dBm
-90 dBm
-100 dBm
M1
M2
Start 12.75 GHz
32001 pts
Stop 26.5 GHz
Measuring...
26.05.2014
15:41:25

High Channel

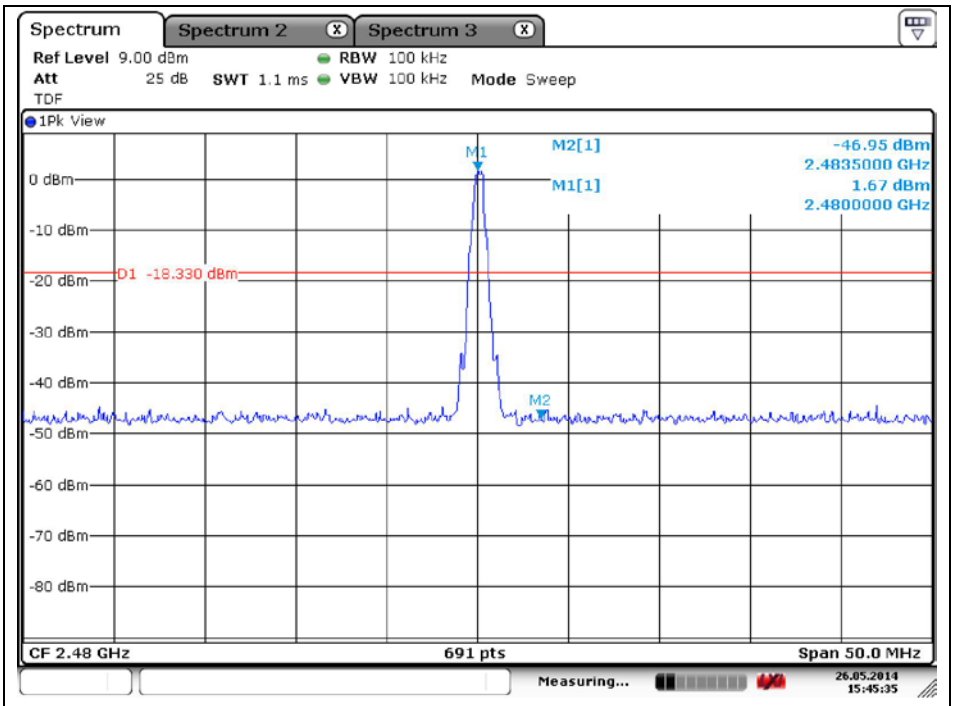


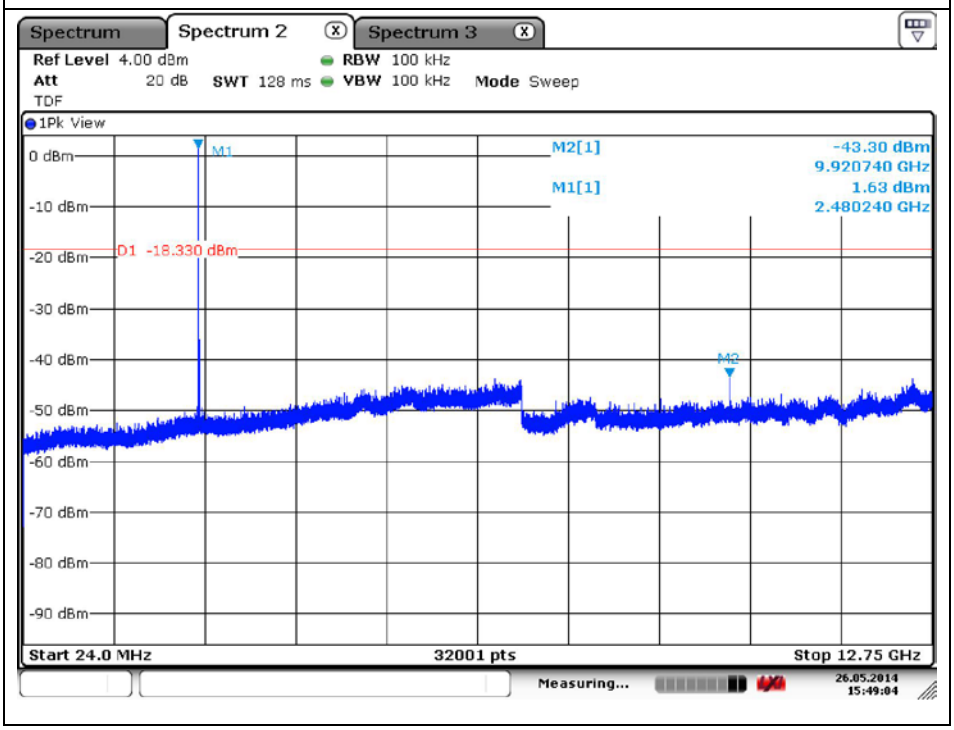


*The results shown in this test report refer only to the sample(s) tested unless otherwise stated. This test report cannot be reproduced, except in full, without prior written permission of the Company.*

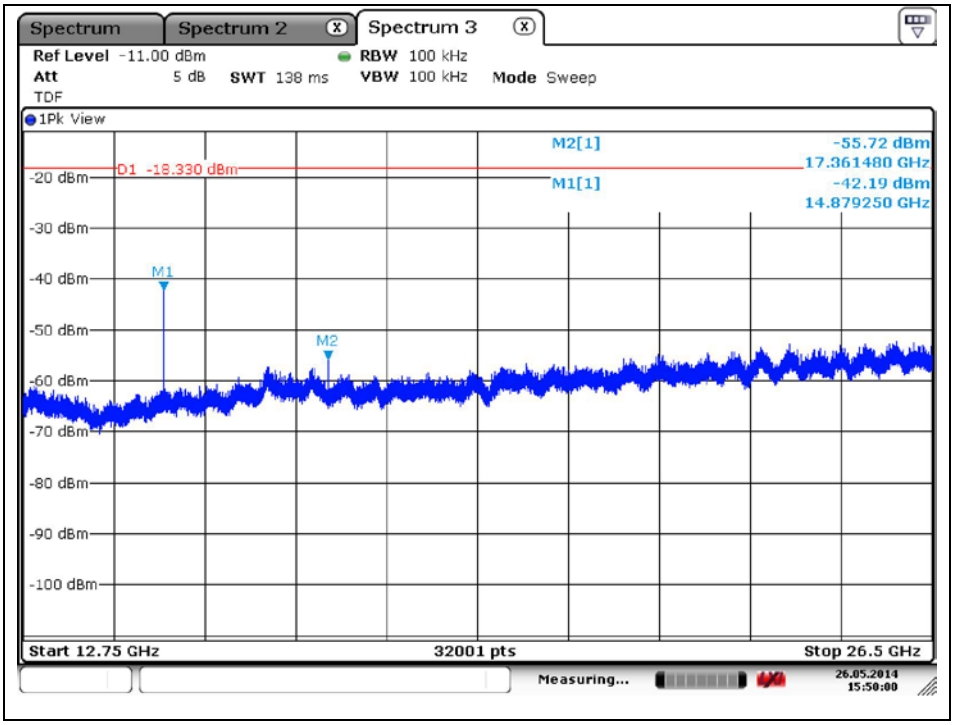
Spectrum
Spectrum 2
Spectrum 3
Ref Level -11.00 dBm
RBW 100 kHz
Att 5 dB
SWT 138 ms
VBW 100 kHz
Mode Sweep
TDF
1Pk View
M2[1] -55.72 dBm
17.361480 GHz
D1 -18.330 dBm
M1[1] -42.19 dBm
14.879250 GHz
-20 dBm
-30 dBm
-40 dBm
-50 dBm
-60 dBm
-70 dBm
-80 dBm
-90 dBm
-100 dBm
M1
M2
Start 12.75 GHz
32001 pts
Stop 26.5 GHz
Measuring...
26.05.2014
15:50:00

Band edge at Hopping

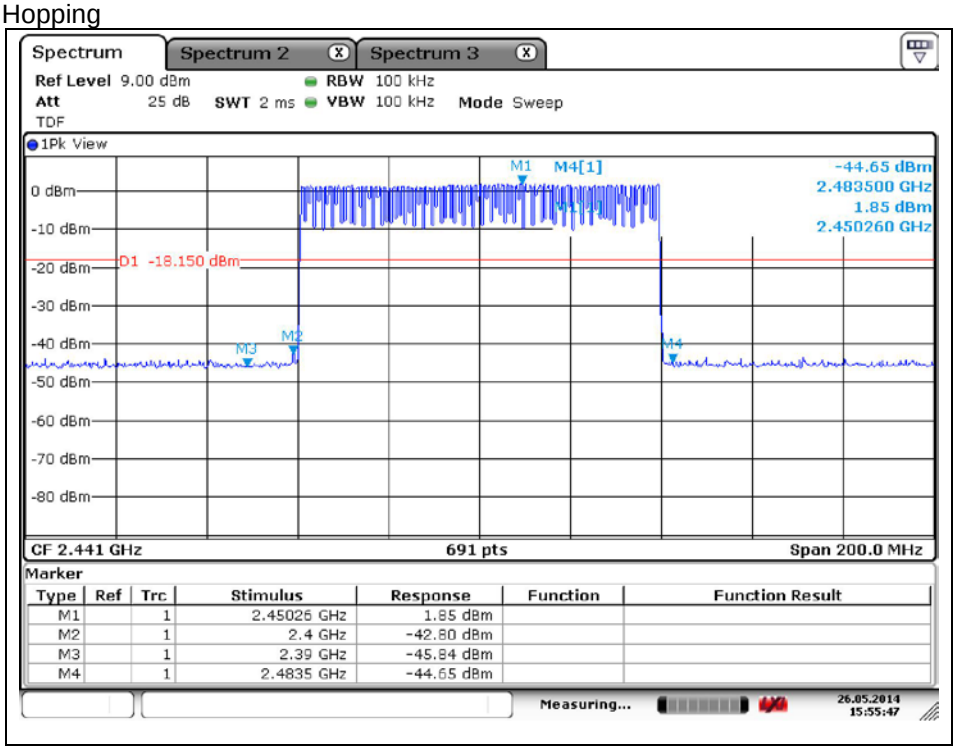

# 3. 20 ㎧ Bandwidth Measurement and 99 % BW

## 3.1. Test Setup

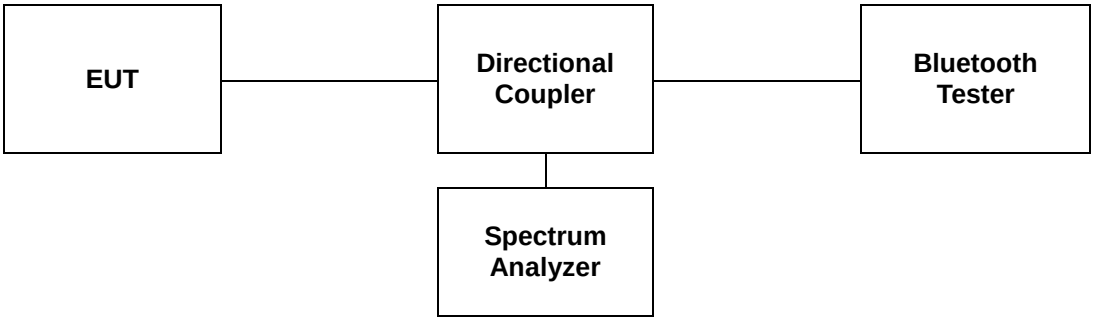


## 3.2. Limit

Limit: Not Applicable

## 3.3. Test Procedure

### 3.3.1. 20 ㎧ Bandwidth

All data rates and modes were investigated for this test. The full data for the worst case data rate are reported in this section.
The test follows DA000705
The 20 ㎧ band width was measured with a spectrum analyzer connected to RF antenna connector (conducted measurement) while EUT was operating in transmit mode at the appropriate center frequency.
Use the following spectrum analyzer setting :
Span = approximately 2 to 3 times the 20 ㎧ bandwidth, centered on a hopping channel.
RBW = greater than 1 % of the 20 ㎧ bandwidth
VBW = RBW
Sweep = auto
Detector = peak
Trace = max hold
The marker-to-peak function to set the mark to the peak of the emission. Use the marker-delta function to measure 20 ㎧ down one side of the emission. Reset the function, and move the marker to the other side of the emission, until it is (as close as possible to) even with the reference marker level. The marker-delta reading at this point is 20 ㎧ bandwidth of the emission.

### 3.3.2. 99 % Bandwidth

Set the spectrum analyzer as SPAN = 2 or 3 times necessary bandwidth, RBW = approximately 1 % of the SPAN, VBW is set to 3 times RBW, Detector = sampling, Trace mode = max hold.
Measure lowest and highest frequencies are placed in a running sum until 0.5 % and 99.5 % of the total is reached.
Record the SPAN between the lowest and the highest frequencies for the 99 % occupied bandwidth.
Repeat until all the test channels are investigated.

*The results shown in this test report refer only to the sample(s) tested unless otherwise stated. This test report cannot be reproduced, except in full, without prior written permission of the Company.*

## 3.4. Test Results

Ambient temperature : (23 ± 1) ℃
Relative humidity : 47 % R.H.

| Operation Mode | Data Rate | Channel | Channel Frequency (㎒) | 20 ㏈ Bandwidth(㎒) | 99 % Bandwidth(㎒) |
|---|---|---|---|---|---|
| GFSK | 1 Mbps | Low | 2 402 | 1.033 | 0.968 |
| | | Middle | 2 441 | 1.039 | 0.964 |
| | | High | 2 480 | 1.038 | 0.955 |

*The results shown in this test report refer only to the sample(s) tested unless otherwise stated. This test report cannot be reproduced, except in full, without prior written permission of the Company.*

## 20 dB Bandwidth

**Operating Mode: GFSK**

Low Channel

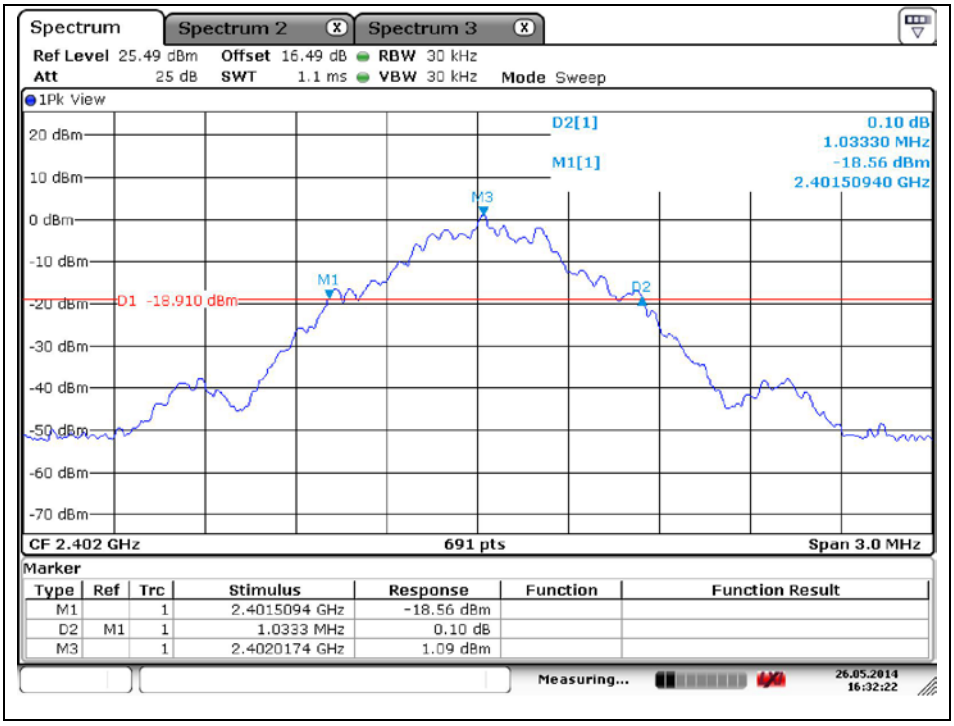


Middle Channel

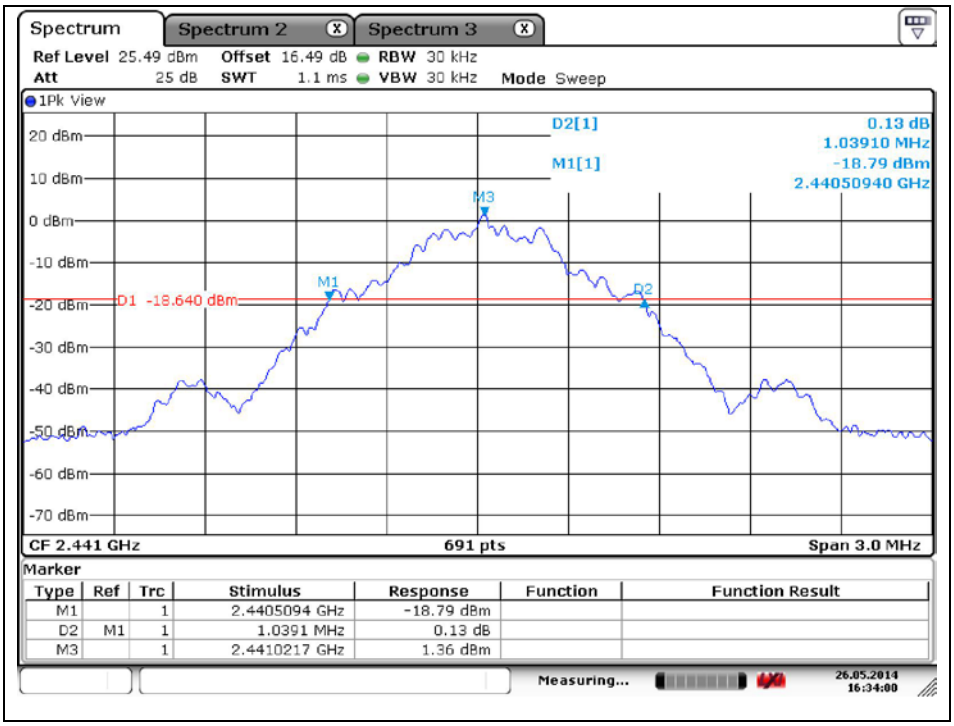

High Channel

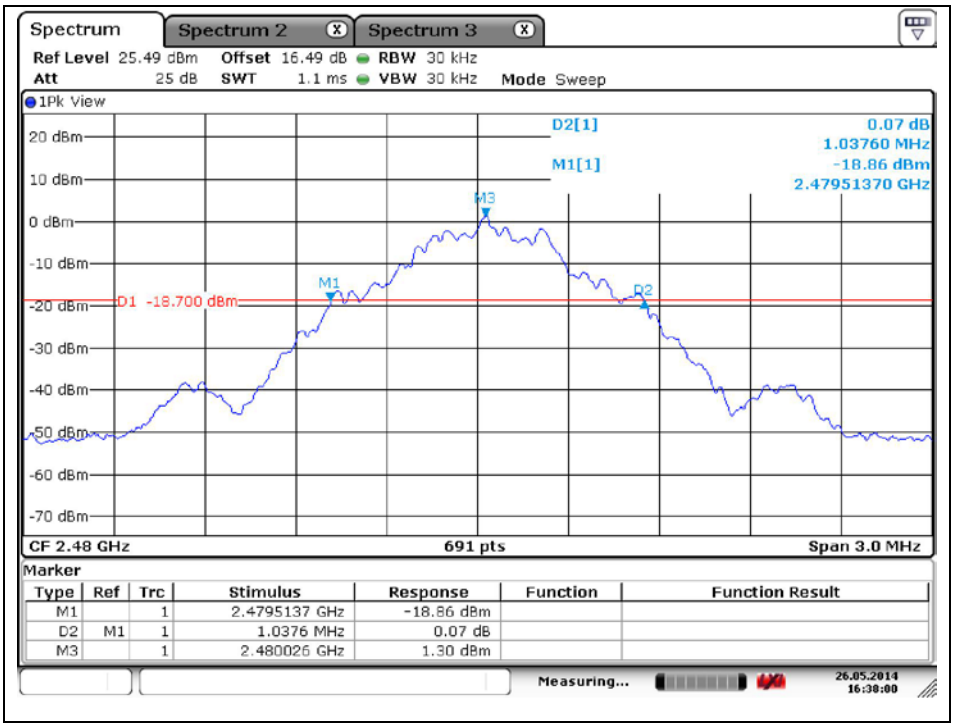

**99 % Bandwidth**

**Operating Mode: GFSK**

Low Channel

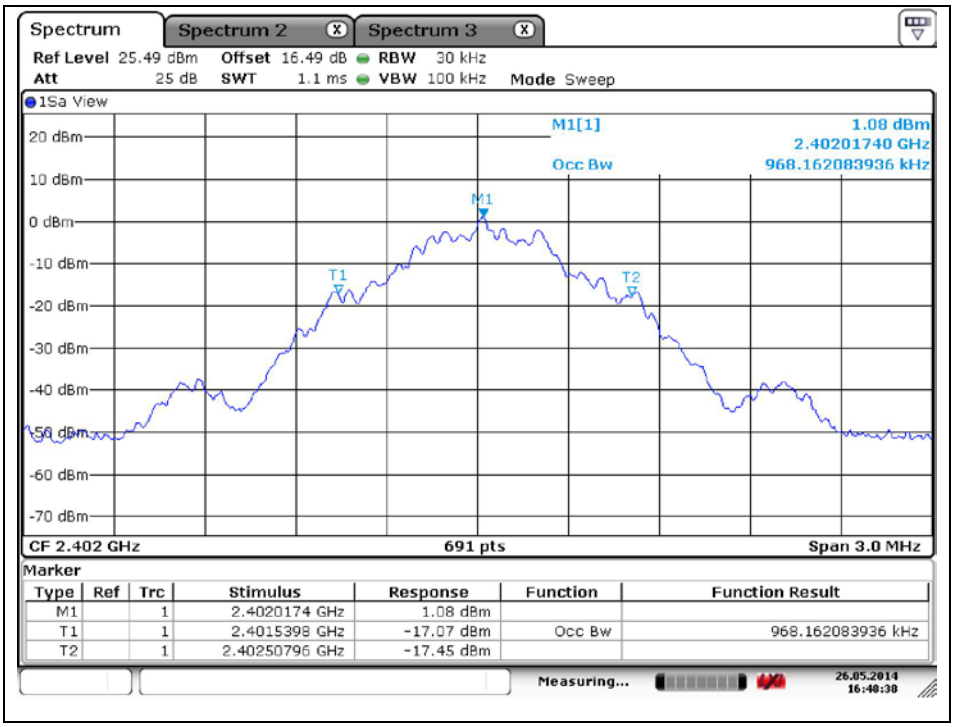


Middle Channel

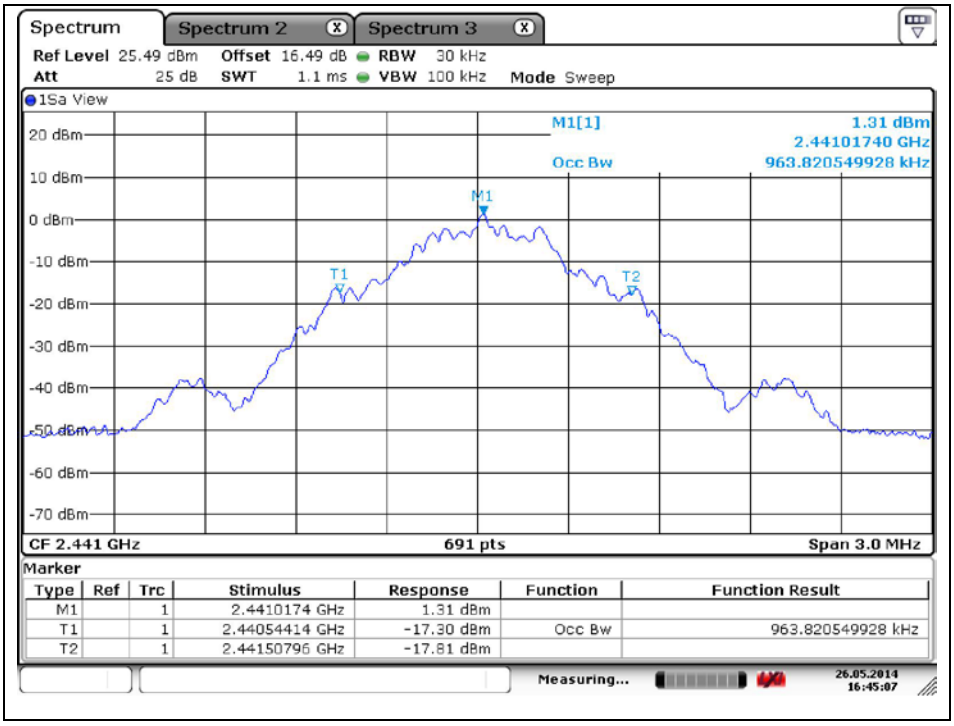


*The results shown in this test report refer only to the sample(s) tested unless otherwise stated. This test report cannot be reproduced, except in full, without prior written permission of the Company.*

High Channel

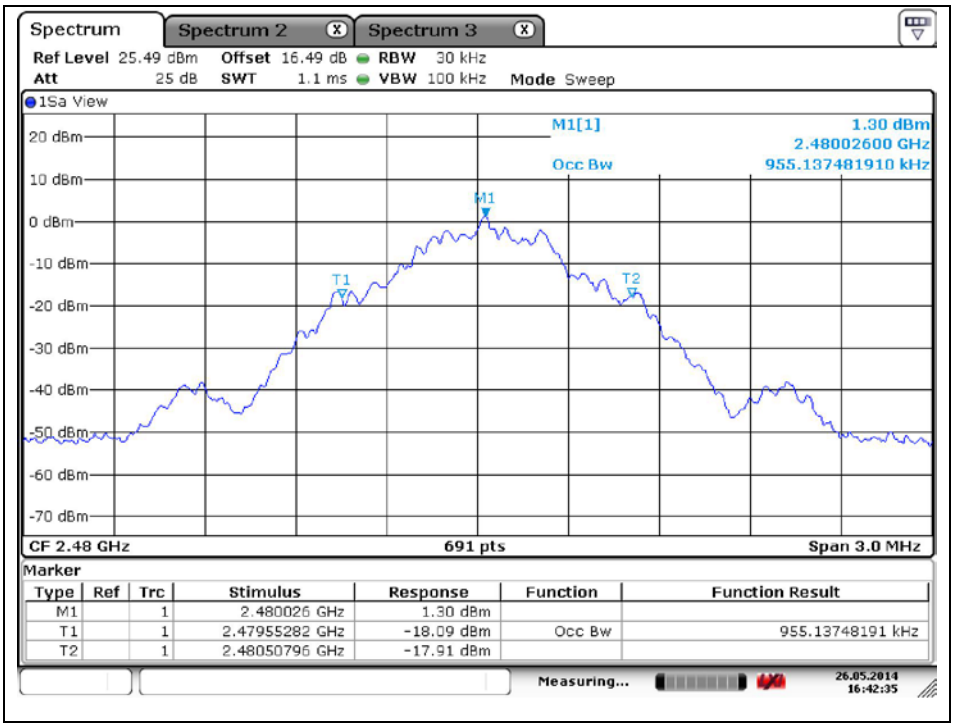

# 4. Maximum Peak Output Power Measurement

## 4.1. Test Setup

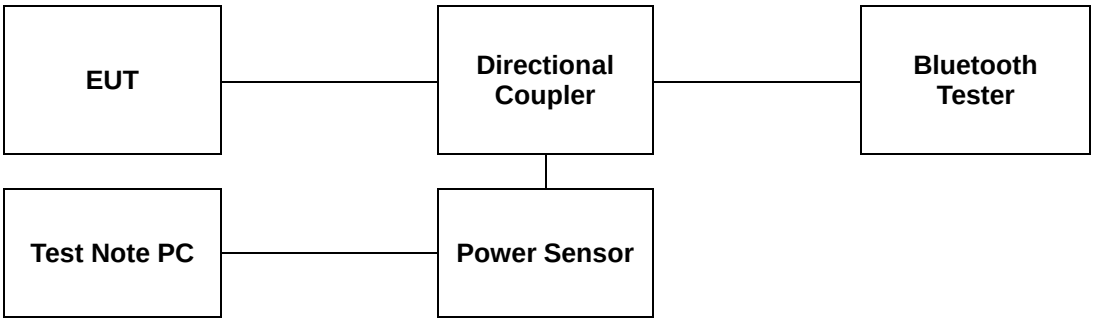


## 4.2. Limit

The maximum peak output power of the intentional radiator shall not exceed the following :

1. §15.247(a)(1), Frequency hopping systems shall have hopping channel carrier frequencies separated by a minimum of 25 ㎑ or the 20 ㏈ bandwidth of the hopping channel, whichever is greater, provided the systems operate with an output power no greater than 125 ㎽.
2. §15.247(b)(1), For frequency hopping systems operating in the 2 400 – 2 483.5 ㎒ employing at least 75 non-overlapping hopping channels, and all frequency hopping systems in the 5 725 – 5 805 ㎒ band: 1 Watt.

## 4.3. Test Procedure

All data rates and modes were investigated for this test. The test follows DA000705. Using the power sensor instead of a spectrum analyzer.

1. Place the EUT on the table and set it in the transmitting mode.
2. Remove the antenna from the EUT and then connect a low loss RF cable from the antenna port to the Power sensor.
3. Test program : (S/W name : R&S Power Viewer, Version : 3.2.0)
4. Measure peak & average power each channel.

*The results shown in this test report refer only to the sample(s) tested unless otherwise stated. This test report cannot be reproduced, except in full, without prior written permission of the Company.*

## 4.4. Test Results

Ambient temperature : (23 ± 1) ℃
Relative humidity : 47 % R.H.

| Operation Mode | Data Rate | Channel | Channel Frequency (㎒) | Attenuator + Cable offset (㏈) | Average Power Result (㏈ m) | Peak Power Result (㏈ m) | Peak Power Limit (㏈ m) |
|---|---|---|---|---|---|---|---|
| GFSK | 1 Mbps | Low | 2 402 | 16.43 | 0.94 | 2.52 | 20.97 |
| | | Middle | 2 441 | 16.47 | 1.06 | 2.64 | 20.97 |
| | | High | 2 480 | 16.54 | 0.92 | 2.49 | 20.97 |

Remark:
In the case of AFH, the limit for peak power is 0.125 W

*The results shown in this test report refer only to the sample(s) tested unless otherwise stated. This test report cannot be reproduced, except in full, without prior written permission of the Company.*

# 5. Hopping Channel Separation

## 5.1. Test Setup

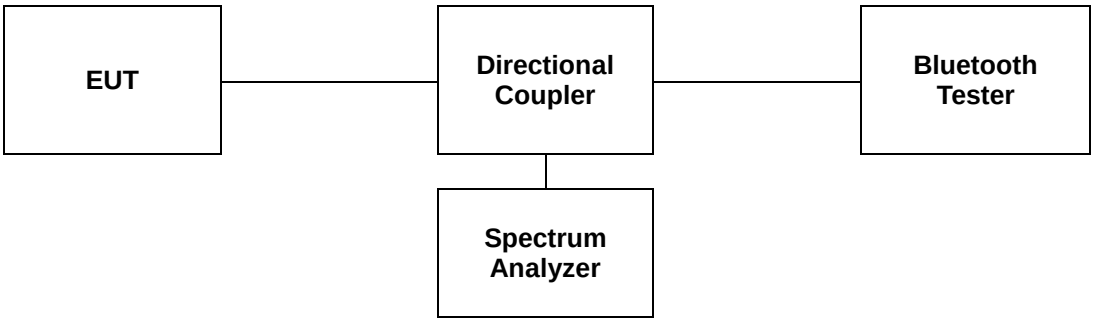


## 5.2. Limit

§15.247(a)(1) Frequency hopping system operating in 2 400 – 2 483.5 ㎒. Band may have hopping channel carrier frequencies that are separated by 25 ㎑ or two-third of 20 ㏈ bandwidth of the hopping channel, whichever is is greater, provided the systems operate with an output power no greater than 125 ㎽.

## 5.3. Test Procedure

All data rates and modes were investigated for this test. The full data for the worst case data rate are reported in this section. The test follows DA000705.

The device is operating in hopping mode between 79 channels and also supporting Adaptive Frequency Hopping with hopping between 20 channels. As compared with each operating mode, 79 channels are chosen as a representative for test.
Use the following spectrum analyzer settings:

Span = wide enough to capture the peaks of two adjacent channels.
RBW = 1 % of the span.
VBW = RBW
Sweep = auto
Detector = peak
Trace = max hold.

Allow the trace to stabilize. Use the marker-delta function to determine the between the peaks of the adjacent channels.

*The results shown in this test report refer only to the sample(s) tested unless otherwise stated. This test report cannot be reproduced, except in full, without prior written permission of the Company.*

## 5.4. Test Results

Ambient temperature : (23 ± 1) ℃
Relative humidity : 47 % R.H.

| Operation Mode | Channel (Middle) | Adjacent Hopping Channel Separation (㎑) | Two-third of 20 ㏈ Bandwidth (㎑) | Minimum Bandwidth (㎑) |
|---|---|---|---|---|
| GFSK | 2 441 ㎒ | 1 000 | 693 | 25 |

Note;
Measurement is made with EUT operating in hopping mode between 79 channels providing a worse case scenario as compared to AFH mode hopping between 20 channels.

**Operating Mode: GFSK**

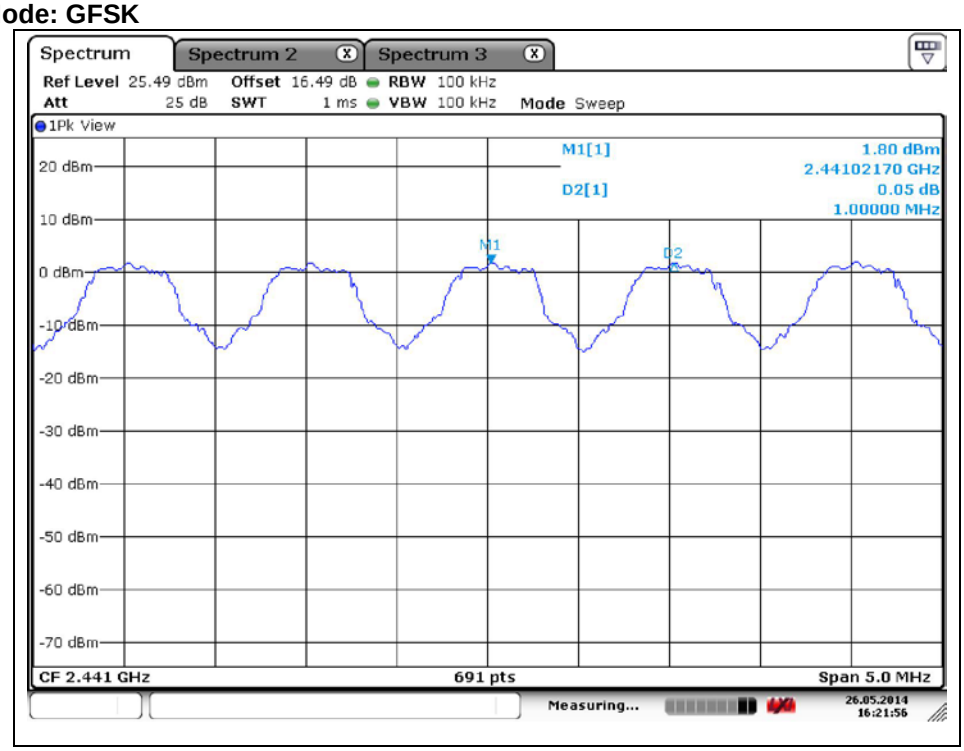

# 6. Number of Hopping Frequency

## 6.1. Test Setup

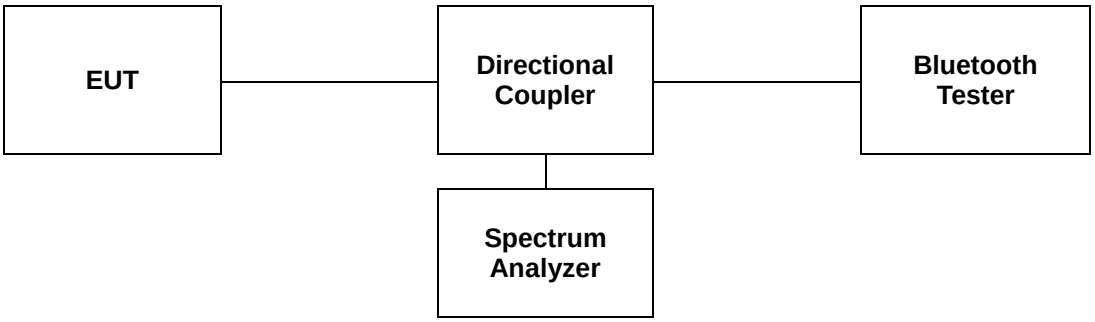


## 6.2. Limit

§15.247(a)(1)(iii), Frequency hopping systems in the 2 400–2 483.5 ㎒ band shall use at least 15 channels. The average time of occupancy on any channel shall not be greater than 0.4 seconds within a period of 0.4 seconds multiplied by the number of hopping channels employed. Frequency hopping systems may avoid or suppress transmissions on a particular hopping frequency provided that a minimum of 15 channels are used.

## 6.3. Test Procedure

All data rates and modes were investigated for this test. The full data for the worst case data rate are reported in this section. The test follows DA000705.

The device supports Adaptive Frequency Hopping and will use a minimum of 20 channels of the 79 available channels.

The EUT must have its hopping function enabled. Use the following spectrum analyzer settings:

1. Remove the antenna from the EUT and then connect a low loss RF cable from the antenna the port to the Spectrum analyzer
2. Set spectrum analyzer Start = 2 400 ㎒, Stop = 2 441.5 ㎒, Sweep=sweep and Start = 2 441.5 ㎒, Stop = 2 483.5 ㎒, Sweep = sweep. Detector = peak.
3. Set the spectrum analyzer as RBW, VBW = 500 ㎑.
4. Max hold, allow the trace to stabilize and count how many channel in the band.

*The results shown in this test report refer only to the sample(s) tested unless otherwise stated. This test report cannot be reproduced, except in full, without prior written permission of the Company.*

## 6.4. Test Results

Ambient temperature : (23 ± 1) ℃
Relative humidity : 47 % R.H.

| Operation Mode | Number of Hopping Frequency | Limit |
|---|---|---|
| GFSK | 79 | ≥ 15 |

Remark:
Measurement is made with EUT operating in hopping mode between 79 channels providing a worse case scenario as compared to AFH mode hopping between 20 channels.

*The results shown in this test report refer only to the sample(s) tested unless otherwise stated. This test report cannot be reproduced, except in full, without prior written permission of the Company.*

**Operating Mode: GFSK**

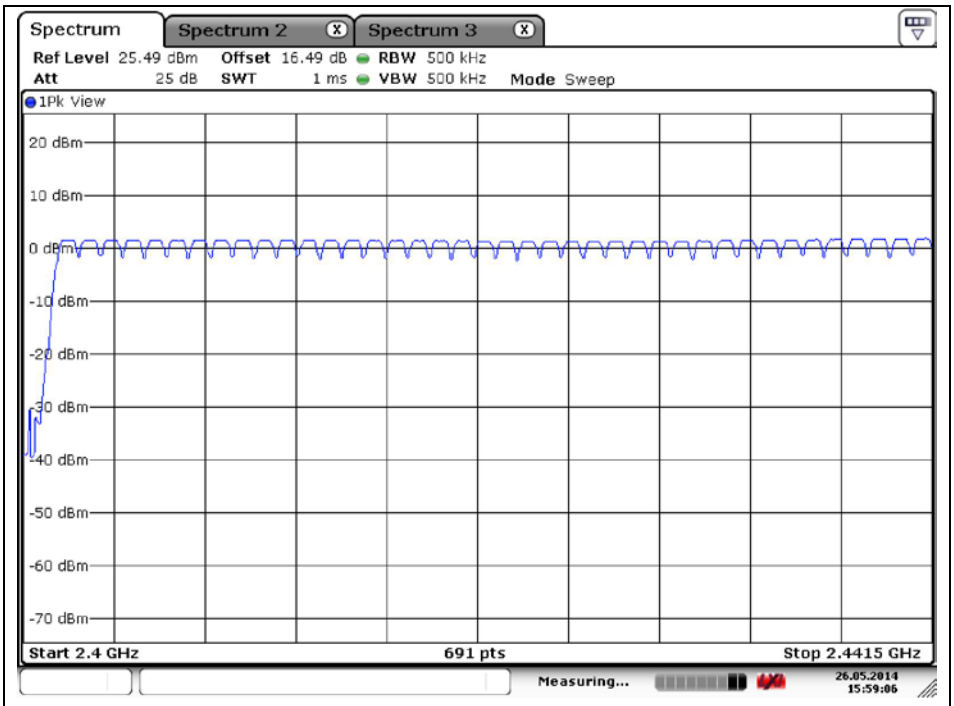


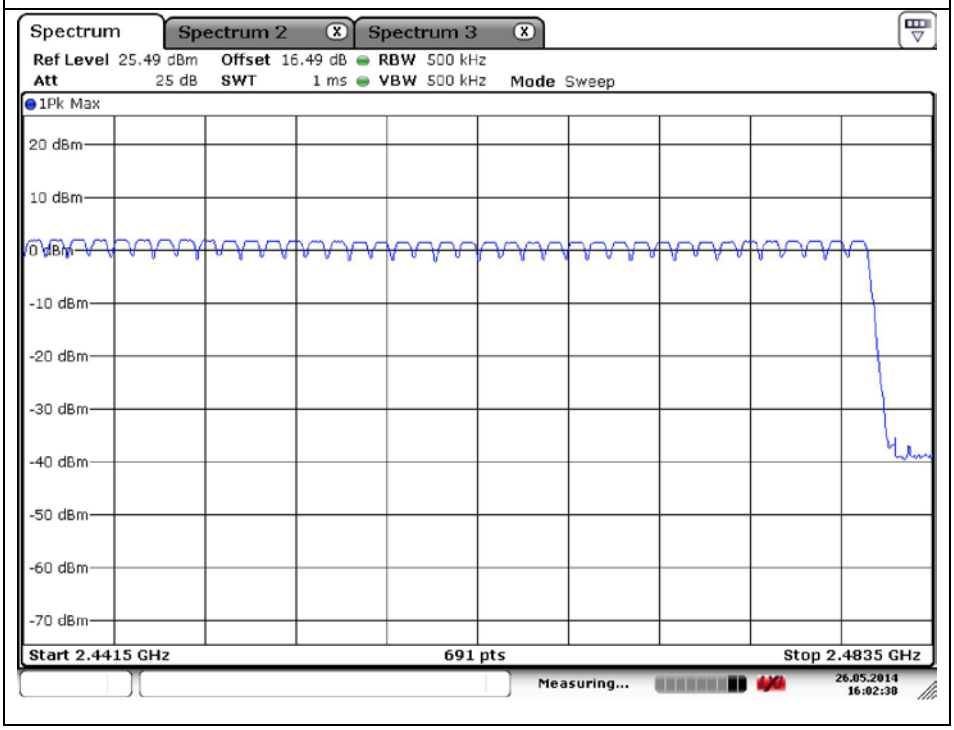


*The results shown in this test report refer only to the sample(s) tested unless otherwise stated. This test report cannot be reproduced, except in full, without prior written permission of the Company.*

# 7. Time of Occupancy (Dwell Time)

## 7.1. Test Set up

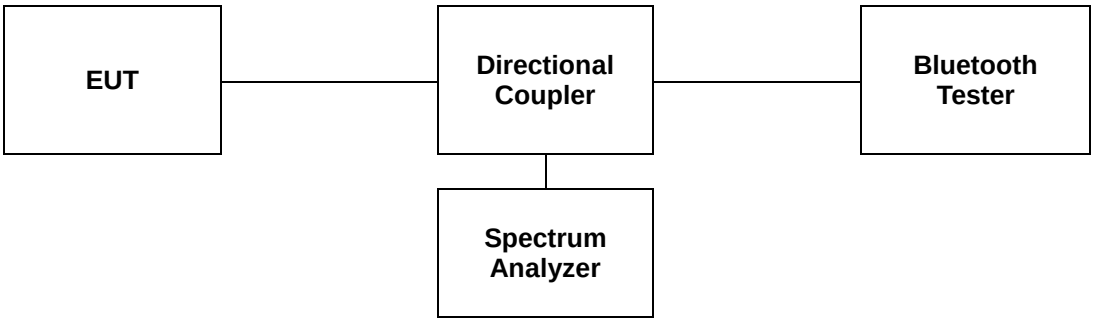


## 7.2. Limit

§15.247(a)(1)(iii) For frequency hopping system operating in the 2 400 – 2 483.5 ㎒ band, the average time of occupancy on any frequency shall not be greater than 0.4 second within a 31.6 second period.

A period time = 0.4(s) * 79 = 31.6(s)

***Adaptive Frequency Hopping**

A period time = 0.4(s) * 20 = 8 (s)

## 7.3. Test Procedure

All data rates and modes were investigated for this test. The full data for the worst case data rate are reported in this section. The test follows DA000705.

1. Check the calibration of the measuring instrument using either an internal calibrator or a known signal from an external generator.
2. Position the EUT as shown in test setup without connection to measurement instrument. Turn on the EUT and connect its antenna terminal to measurement instrument via a low loss cable.
3. Measure the time duration of one transmission on the measured frequency. And then plot the result with time difference of this time duration.
4. The Bluetooth has 3 type of payload, DH1, DH3, DH5.The hopping rate is insisted of 1 600 per second.

The EUT must have its hopping function enabled. Use the following spectrum analyzer setting:

Span = zero span, centered on a hopping channel
RBW = 1 ㎒
VBW = RBW
Sweep = as necessary to capture the entire dwell time per hopping channel
Detector = peak
Trace = max hold
Use the marker-delta function to determine the dwell time. If this value varies with different modes of operation repeat this test for each variation.

*The results shown in this test report refer only to the sample(s) tested unless otherwise stated. This test report cannot be reproduced, except in full, without prior written permission of the Company.*

## 7.4. Test Results

Ambient temperature : (23 ± 1) ℃
Relative humidity : 47 % R.H.

### 7.4.1. Packet Type: DH1

| Operation Mode | Frequency | Dwell Time (㎳) | Time of occupancy on the Tx Channel in 31.6 sec (㎳) | Limit for time of occupancy on the Tx Channel in 31.6 sec (㎳) |
|---|---|---|---|---|
| GFSK | 2 441 ㎒ | 0.43 | 137.60 | 400 |

Note:
Time of occupancy on the TX channel in 31.6 sec
In case of GFSK, 0.43 × {(1 600 ÷ 2) / 79} × 31.6 = 137.60 ㎳

**Operating Mode: GFSK**

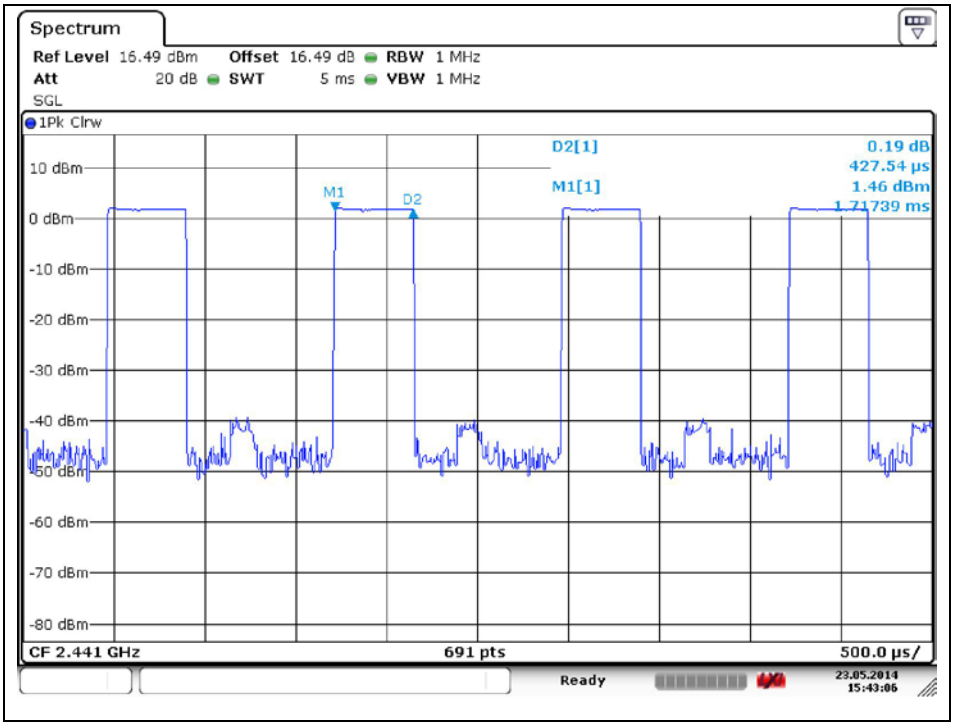

### 7.4.2. Packet Type: DH3

| Operation Mode | Frequency | Dwell Time (㎳) | Time of occupancy on the Tx Channel in 31.6 sec (㎳) | Limit for time of occupancy on the Tx Channel in 31.6 sec (㎳) |
|---|---|---|---|---|
| GFSK | 2 441 ㎒ | 1.69 | 270.40 | 400 |

Note:
Time of occupancy on the TX channel in 31.6 sec
In case of GFSK, 1.69 × {(1 600 ÷ 4) / 79} × 31.6 = 270.40 ㎳

**Operating Mode: GFSK**

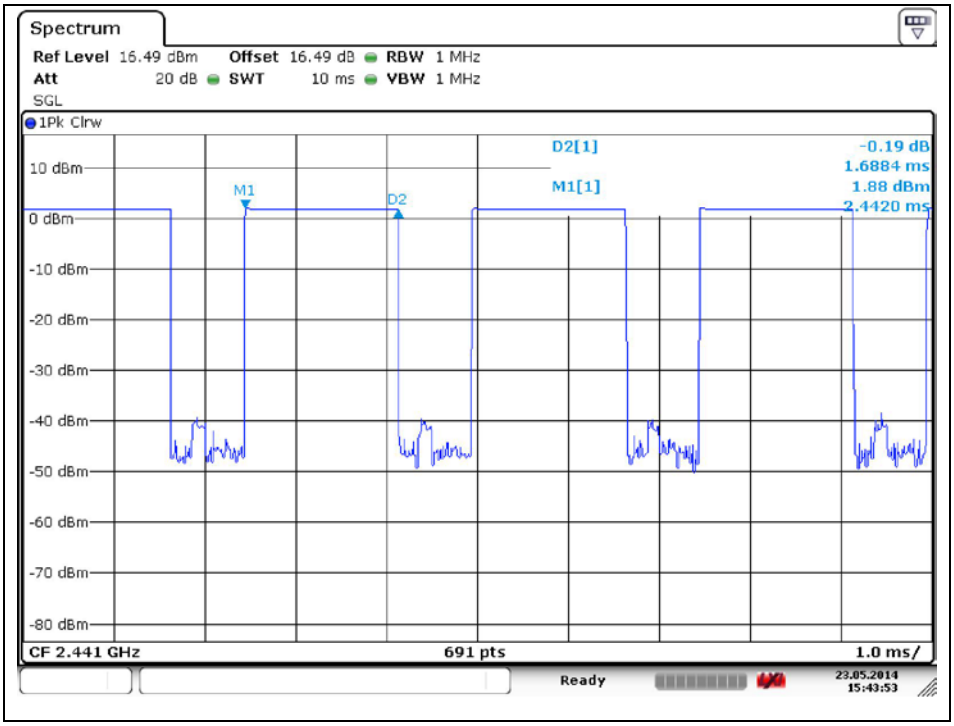

### 7.4.3. Packet Type: DH5

| Operation Mode | Frequency | Dwell Time (㎳) | Time of occupancy on the Tx Channel in 31.6 sec (㎳) | Limit for time of occupancy on the Tx Channel in 31.6 sec (㎳) |
|---|---|---|---|---|
| GFSK | 2 441 ㎒ | 2.93 | 312.53 | 400 |

Note:
Time of occupancy on the TX channel in 31.6 sec
In case of GFSK, 2.93 × {(1 600 ÷ 6) / 79} × 31.6 = 312.53 ㎳

**Operating Mode: GFSK**

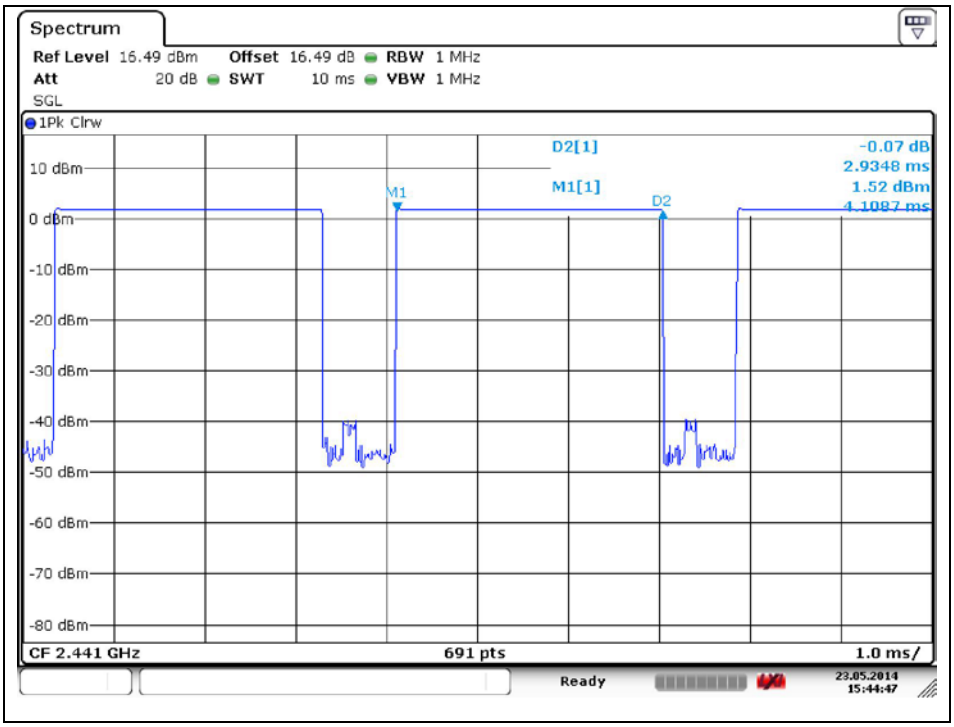

### 7.4.4. Packet Type: DH1 (Adaptive Frequency Hopping)

| Operation Mode | Frequency | Dwell Time (㎳) | Time of occupancy on the Tx Channel in 8 sec (㎳) | Limit for time of occupancy on the Tx Channel in 8 sec (㎳) |
|---|---|---|---|---|
| GFSK | 2 441 ㎒ | 0.42 | 67.20 | 400 |

Note:
Time of occupancy on the TX channel in 8 sec
In case of GFSK, 0.42 × {(800 ÷ 2) / 20} × 8 = 67.20 ㎳

**Operating Mode: GFSK**

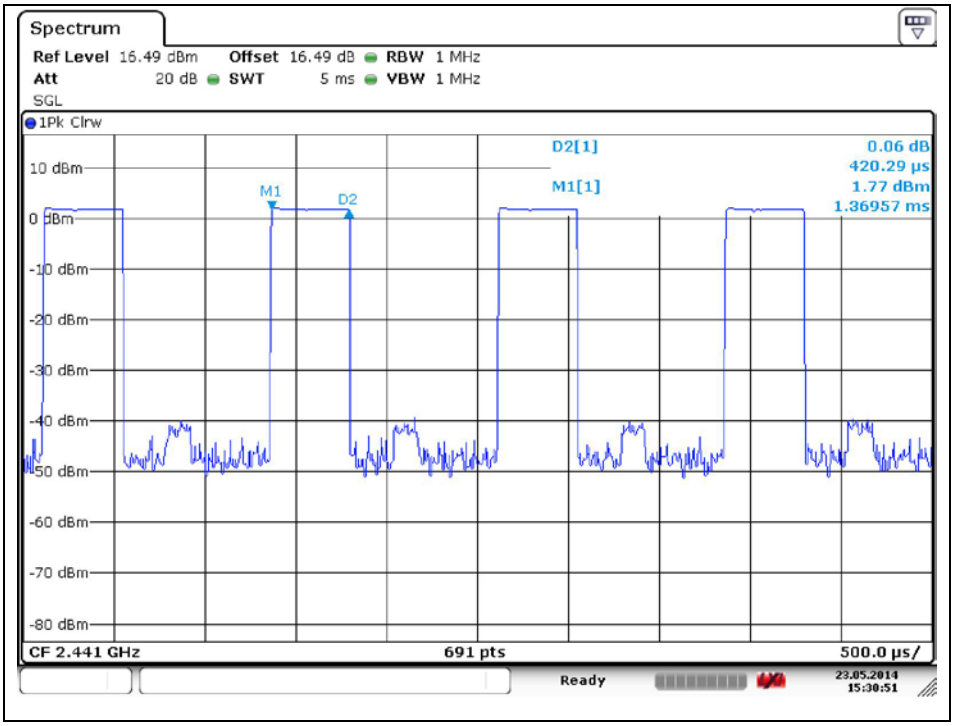

### 7.4.5. Packet Type: DH3 (Adaptive Frequency Hopping)

| Operation Mode | Frequency | Dwell Time (㎳) | Time of occupancy on the Tx Channel in 8 sec (㎳) | Limit for time of occupancy on the Tx Channel in 8 sec (㎳) |
|---|---|---|---|---|
| GFSK | 2 441 ㎒ | 1.68 | 134.40 | 400 |

Note:
Time of occupancy on the TX channel in 8 sec
In case of GFSK, 1.68 × {(800 ÷ 4) / 20} × 8 = 134.40 ㎳

**Operating Mode: GFSK**

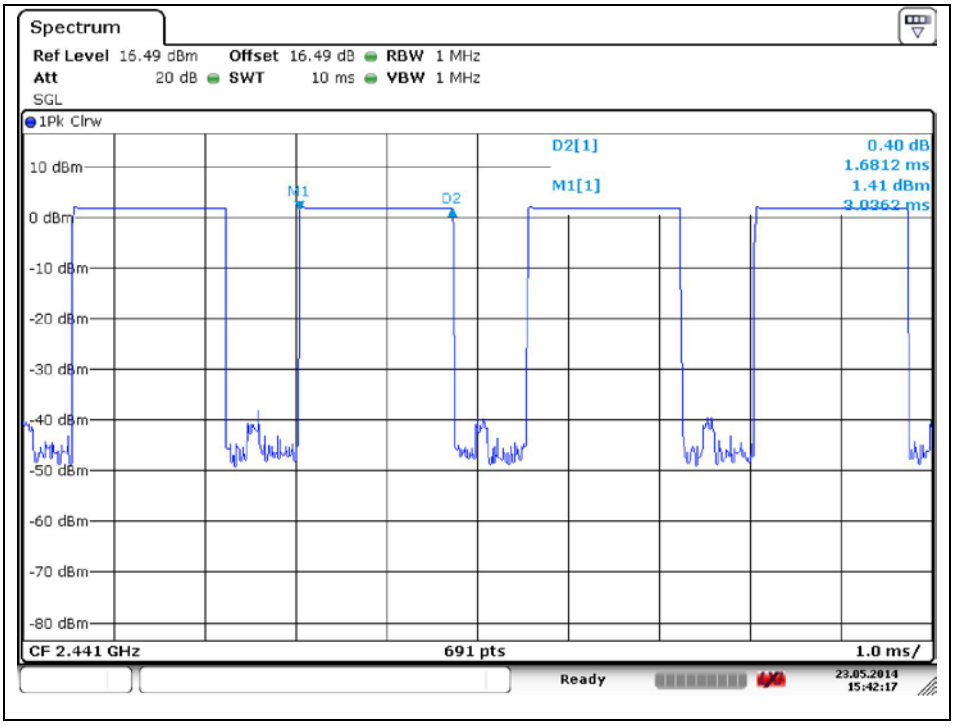

### 7.4.6. Packet Type: DH5 (Adaptive Frequency Hopping)

| Operation Mode | Frequency | Dwell Time (㎳) | Time of occupancy on the Tx Channel in 8 sec (㎳) | Limit for time of occupancy on the Tx Channel in 8 sec (㎳) |
|---|---|---|---|---|
| GFSK | 2 441 ㎒ | 2.93 | 156.27 | 400 |

Note:
Time of occupancy on the TX channel in 8 sec
In case of GFSK, 2.93 × {(800 ÷ 6) / 20} × 8 = 156.27 ㎳

**Operating Mode: GFSK**

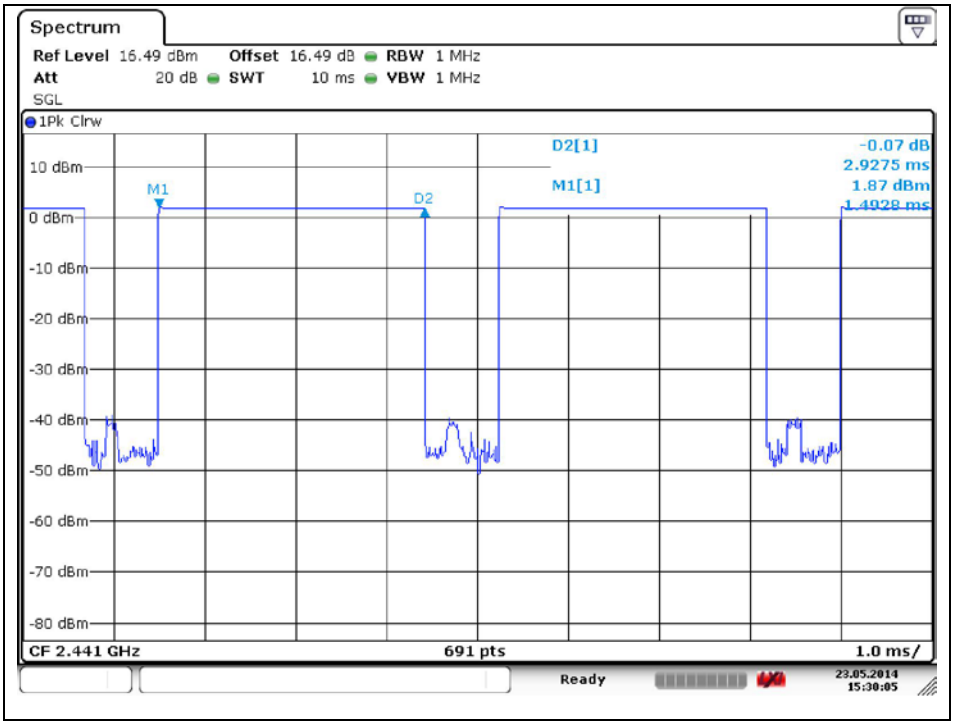

# 8. Transmitter AC Power Line Conducted Emission

## 8.1. Test Setup

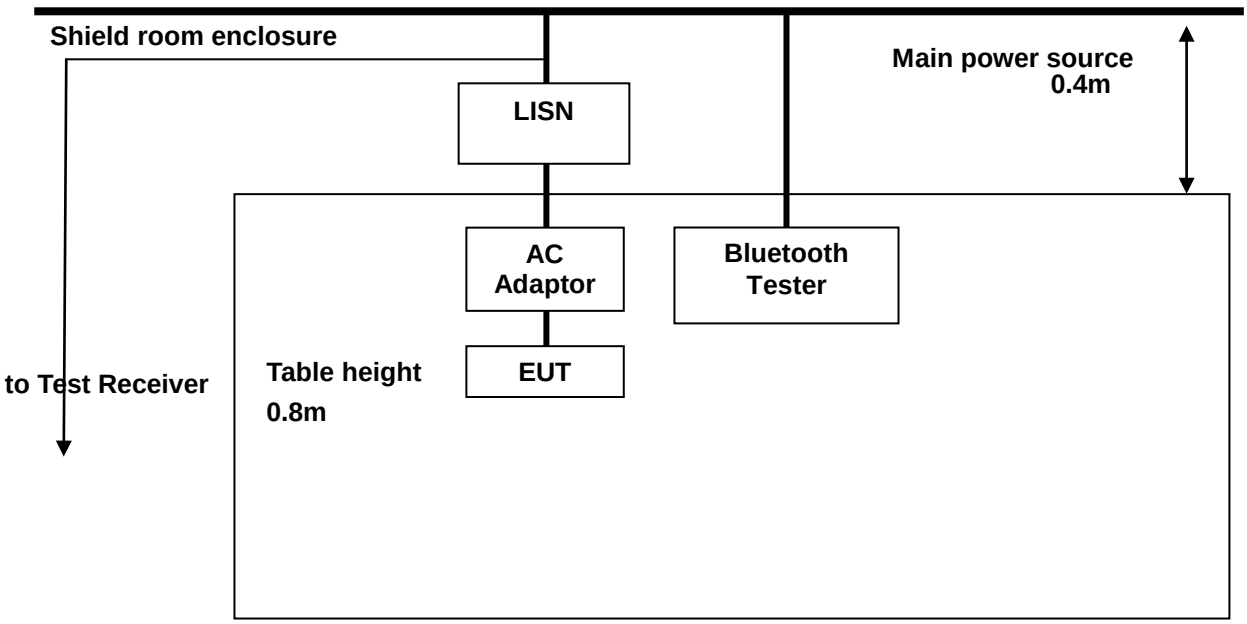


## 8.2. Limit

According to §15.207(a) for an intentional radiator that is designed to be connected to the public utility (AC) power line, the radio frequency voltage that is conducted back onto the AC power line on any frequency or frequencies, within the band 150 ㎑ to 30 ㎒, shall not exceed the limits in the following table, as measured using a 50 uH/50 ohm line impedance stabilization network(LISN).
Compliance with the provision of this paragraph shall on the measurement of the radio frequency voltage between each power line and ground at the power terminal. The lower applies at the boundary between the frequency ranges.

| Frequency of Emission (㎒) | Conducted limit (㏈㎶) | |
|---|---|---|
| | Quasi-peak | Average |
| 0.15 – 0.50 | 66 - 56* | 56 - 46* |
| 0.50 – 5.00 | 56 | 46 |
| 5.00 – 30.0 | 60 | 50 |

* Decreases with the logarithm of the frequency.

*The results shown in this test report refer only to the sample(s) tested unless otherwise stated. This test report cannot be reproduced, except in full, without prior written permission of the Company.*

## 8.3. Test Procedures

AC power line conducted emissions from the EUT were measured according to the dictates of ANSI C63.4:2003

All data rates and modes were investigated for this test. The full data for the worst case data rate are reported in this section.

1. The test procedure is performed in a 6.5 m × 3.5 m × 3.5 m (L × W × H) shielded room. The EUT along with its peripherals were placed on a 1.0 m (W) × 1.5 m (L) and 0.8 m in height wooden table and the EUT was adjusted to maintain a 0.4 meter space from a vertical reference plane.
2. The EUT was connected to power mains through a line impedance stabilization network (LISN) which provides 50 ohm coupling impedance for measuring instrument and the chassis ground was bounded to the horizontal ground plane of shielded room.
3. All peripherals were connected to the second LISN and the chassis ground also bounded to the horizontal ground plane of shielded room.
4. The excess power cable between the EUT and the LISN was bundled. The power cables of peripherals were unbundled. All connecting cables of EUT and peripherals were moved to find the maximum emission.

*The results shown in this test report refer only to the sample(s) tested unless otherwise stated. This test report cannot be reproduced, except in full, without prior written permission of the Company.*

## 8.4. Test Results (Worst case configuration_GFSK mode, 1 Mbps, Low channel)

The following table shows the highest levels of conducted emissions on both phase of Hot and Neutral line.

Ambient temperature : (23 ± 1) ℃
Relative humidity : 47 % R.H.

Frequency range : 0.15 ㎒ – 30 ㎒
Measured Bandwidth : 9 ㎑

| FREQ. | LEVEL(dBμV) | | LINE | LIMIT(dBμV) | | MARGIN(dB) | |
|---|---|---|---|---|---|---|---|
| (㎒) | Q-Peak | Average | | Q-Peak | Average | Q-Peak | Average |
| 0.52 | 13.90 | 8.10 | H | 56.00 | 46.00 | 42.10 | 37.90 |
| 1.35 | 26.70 | 18.50 | H | 56.00 | 46.00 | 29.30 | 27.50 |
| 3.13 | 20.10 | 8.70 | H | 56.00 | 46.00 | 35.90 | 37.30 |
| 6.23 | 27.90 | 16.10 | H | 60.00 | 50.00 | 32.10 | 33.90 |
| 14.29 | 41.40 | 25.50 | H | 60.00 | 50.00 | 18.60 | 24.50 |
| 17.95 | 34.00 | 22.90 | H | 60.00 | 50.00 | 26.00 | 27.10 |
| 0.53 | 15.00 | 6.20 | N | 56.00 | 46.00 | 41.00 | 39.80 |
| 1.00 | 9.00 | 5.50 | N | 56.00 | 46.00 | 47.00 | 40.50 |
| 1.38 | 8.60 | 5.50 | N | 56.00 | 46.00 | 47.40 | 40.50 |
| 2.47 | 10.80 | 4.40 | N | 56.00 | 46.00 | 45.20 | 41.60 |
| 4.56 | 20.30 | 15.60 | N | 56.00 | 46.00 | 35.70 | 30.40 |
| 14.29 | 29.20 | 8.30 | N | 60.00 | 50.00 | 30.80 | 41.70 |

Note ;

1. Line ( H ): Hot, Line ( N ): Neutral
2. All modes of operation were investigated and the worst-case emissions are reported using GFSK 1Mbps
3. The limit for Class B device(s) from 150 ㎑ to 30 ㎒ are specified in Section of the Title 47 CFR.
4. Traces shown in plot mad using a peak detector and average detector
5. Deviations to the Specifications: None.

*The results shown in this test report refer only to the sample(s) tested unless otherwise stated. This test report cannot be reproduced, except in full, without prior written permission of the Company.*

**Plot of Conducted Power line**

Test mode: (Hot)

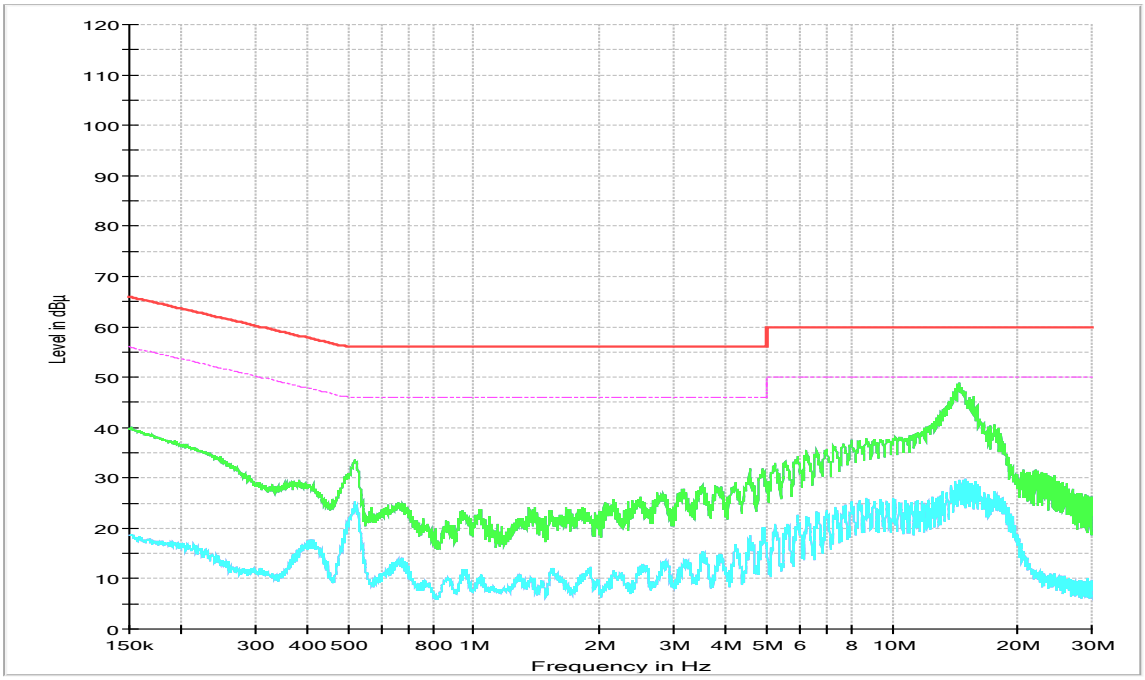

Test mode: (Neutral)

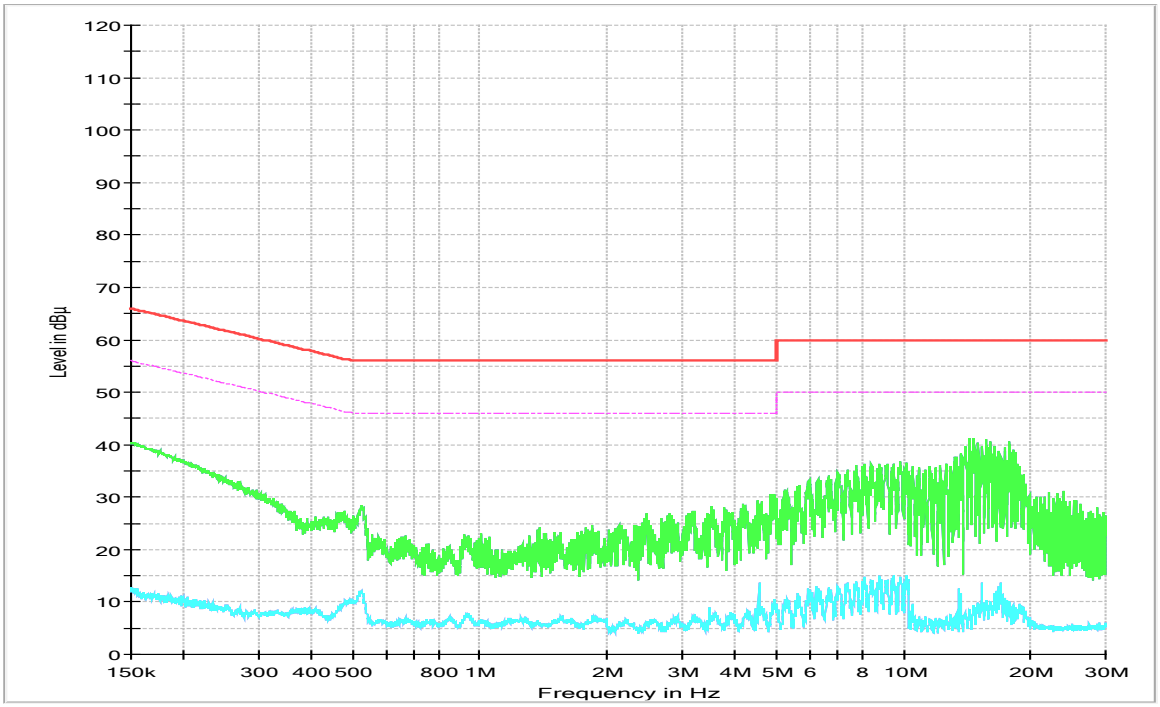

# 9. Antenna Requirement

## 9.1. Standard Applicable

For intentional device, according to FCC 47 CFR Section §15.203, an intentional radiator shall be designed to ensure that no antenna other than that furnished by the responsible party shall be used with the device. And according to FCC 47 CFR Section §15.247 (b) if transmitting antennas of directional gain greater than 6 dBi are used, the power shall be reduced by the amount in dB that the gain of the antenna exceeds 6 dBi.

## 9.2. Antenna Connected Construction

Antenna used in this product is PCB Pattern Antenna type with gain of 4.69 dBi.

*The results shown in this test report refer only to the sample(s) tested unless otherwise stated. This test report cannot be reproduced, except in full, without prior written permission of the Company.*