SAMSUNG
ELECTRONICS

Printed in Korea
Type E. 2014/06
GH68-41758A Rev.1.0

SAMSUNG

Galaxy Tab S 10.5 Bluetooth Keyboard

MODEL: EJ-CT800

www.samsung.com

Copyright © 2014 Samsung Electronics

- Please read this manual before using the device to ensure safe and proper use.
- Images may differ in appearance from the actual product. Content is subject to change without prior notice.

Trademarks

- SAMSUNG and the SAMSUNG logo are registered trademarks of Samsung Electronics.
- Bluetooth® is a registered trademark of Bluetooth SIG, Inc. worldwide.
- All other trademarks and copyrights are the property of their respective owners.

Device layout

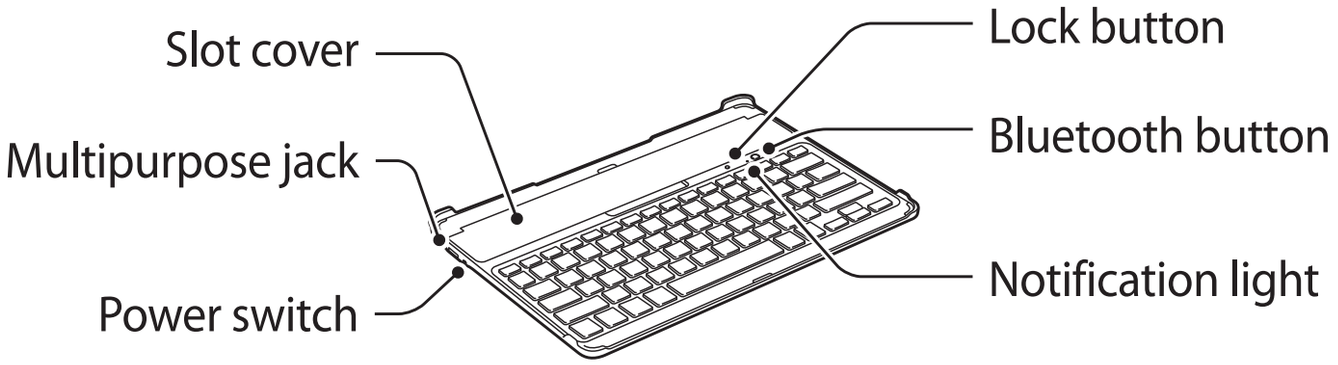

Charging the battery

This device has a built-in battery. Before using the device for the first time or when the battery has been unused for extended periods, you must charge the battery.

Use only Samsung-approved chargers and cables. Unapproved chargers or cables can cause the battery to explode or damage the device.

Charge the device by connecting it to the computer or the USB power adaptor via the USB cable.

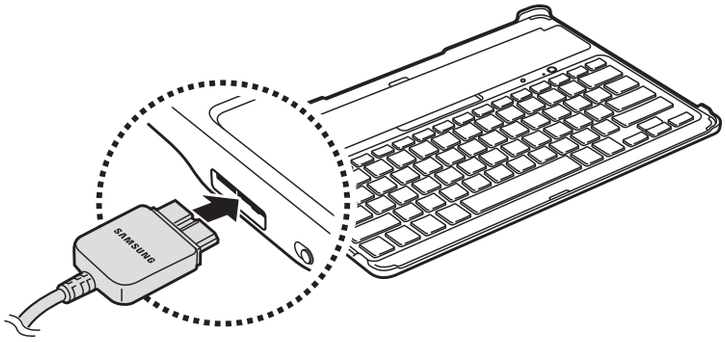

- The notification light turns red while the device is being charged. The notification light turns green when charging is complete.

After fully charging, disconnect the device from the charger. First unplug the charger from the device, and then unplug it from the electric socket.

- Charging the battery is only possible by connecting the provided USB cable into the multipurpose jack. HDTV adaptors and regular USB connectors are not supported.

- To save energy, unplug the charger when not in use. The charger does not have a power switch, so you must unplug the charger from the electric socket when not in use to avoid wasting power. The charger should remain close to the electric socket and easily accessible while charging.
- The socket-outlet shall be installed near the equipment and shall be easily accessible.

Charging time and standard run time (200 mAh)

Charging time	Approx. 2 hrs
Standard run time	Approx. 120 hrs

- Charging time is measured after charging with a Samsung-approved charger.

- Battery run time is results of tests performed in the manufacturer's laboratory. Standby time was measured at the time of the first shipment.
- The battery charging time and run time may vary depending on the environment the device is used in.

Turning the device on or off

Slide the Power switch to **ON** to turn on the device.

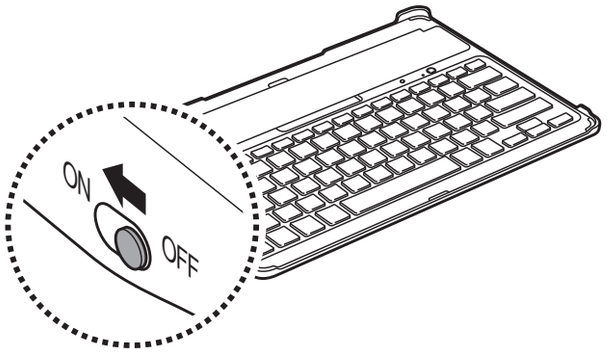

Slide the Power switch to **OFF** to turn off the device.

Using a tablet

Mounting the tablet

Place the tablet into the slot.

To remove the tablet from device, lift the tablet upwards.

Follow the instructions when removing the tablet from the device. Otherwise, the tablet or the device may be damaged.

Stowing the tablet

Completely open the fastener clip located on the front edge of the device. Place the tablet in the slot with the touch screen facing the device.

Then, use the clip to fasten the tablet to the device.

- First align the edges of the tablet with the device, and then lower the tablet into the slot of the device.

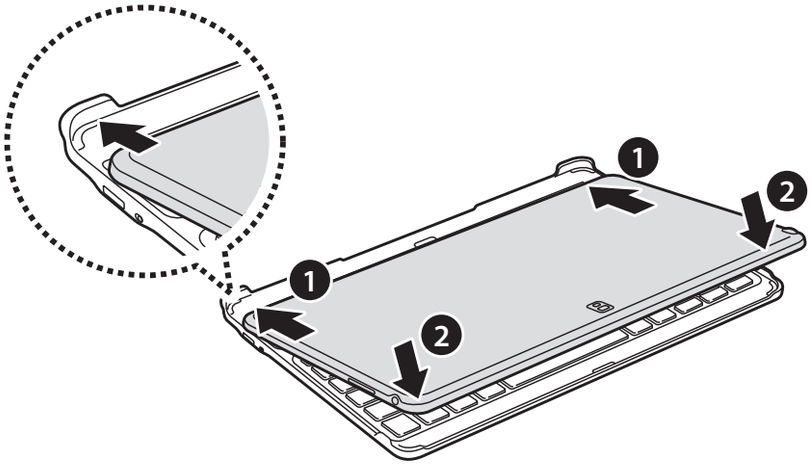

To separate the tablet from the device, completely open the fastener clip, and then pull the tablet upwards.

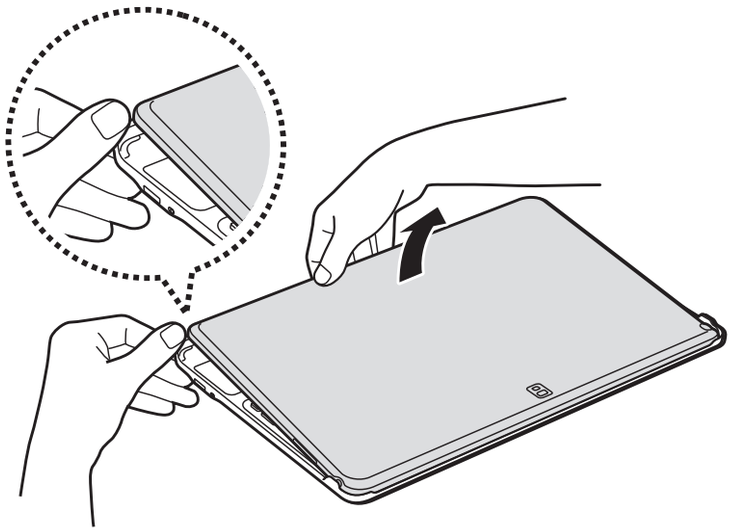

Connecting to other devices

After turning on the device, you can connect the device to other Bluetooth-enabled devices. The device automatically connects to previously connected devices.

1 On the connected device, turn on the Bluetooth feature.

The connected device searches for Bluetooth devices.

2 From the search results, select the device name.

If the device is not on the list, turn on the device and press and hold the Bluetooth button for more than 3 seconds.

3 When requested, enter the passkey on the connected device's screen and press the Enter key.

When pairing is complete, the device's name appears in the device list.

- Keys cannot be used if the Lock button is pressed.
- When the tablet and device are closed and the Lock button is pressed, the Bluetooth connection is deactivated. When you open the tablet, the Bluetooth connection is automatically restored.

Notices for using Bluetooth

- Ensure that there are no obstacles between your device and a connected mobile device, including human bodies.
- Bluetooth uses the same frequency as some industrial, scientific, medical, and low power products. Interference may occur when making connections near these types of products.
- Obstructions between the two devices, such as walls, corners, or partitions, may cause a weak connection.

Some devices, especially those that are not tested or approved by the Bluetooth SIG, may be incompatible with your device.

Disconnecting from other devices

Use one of the following methods to disconnect a device:

- Turn off the device.
- Turn off the Bluetooth feature on the connected device.

You can connect to another device only after disconnecting a previously connected device.

Press and hold the Bluetooth button for more than 3 seconds to connect to another device.

Using the keyboard

Before using the keyboard, select a display language on the connected device. For more information about language settings, refer to the user manual of the connected device.

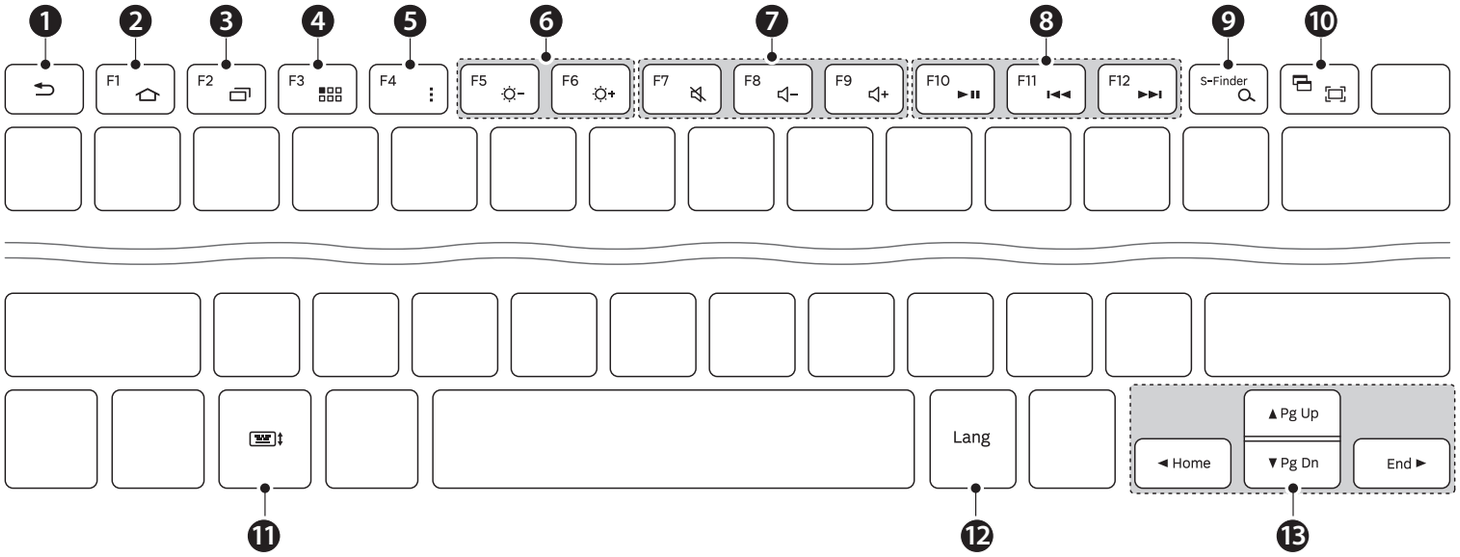

- Some key functions may not work properly depending on the connected device's operating system. The device is compatible with Samsung mobile devices running the Android 4.4 OS or above. For more information about upgrading device software, refer to each device's user manual.
- The S-Finder key is only available when connected to a tablet that supports the S-Finder feature.

No.	Key	Function
❶	↩	• Press to return to previous screen.
❷	⌂	• Press to return to the Home screen.
❸	▭	• Press to open the list of recently-used applications.
❹	▦	• Press to open the Applications screen.
❺	⋮	• Press to open a list of options available for the current screen.
❻	☼− / ☼+	• Press to adjust the brightness.
❼	🔇 / 🔈− / 🔈+	• Press to adjust the volume.
❽	►II / I◄◄ / ►►I	• Press to control media file playbacks.
❾	🔍	• Press on the Home screen to launch Google search. • Fn + 🔍 : Press on the Home screen to launch **S Finder**.
❿	⛶	• Press to capture a screenshot. • Fn + ⛶ : Press to activate or deactivate Multi Window.

No.	Key	Function
⓫	⌨↕	• Press to show or hide the keyboard on the touch screen.
⓬	Lang	• Press to show the display language. • Press on the keyboard to change language keyboards.
⓭	▲/▼/◄/►	Press to move the page or cursor. • Fn + ▲ : Page up • Fn + ▼ : Page down • Fn + ◄ : Move the cursor to the start. • Fn + ► : Move the cursor to the end.

Safety information

To prevent injury to yourself and others or damage to your device, read the safety information about your device before using the device. Some content may be not applicable to your device.

Use only Samsung-approved chargers

Unapproved chargers can cause the device to malfunction or damage the device.

Do not touch the power cord with wet hands or disconnect the charger by pulling the cord

Use the device for its intended purpose only

Do not store your device in very hot or very cold areas

It is recommended to use your device at temperatures from -20 °C to 60 °C

Do not store your device or charger near or in heaters, microwaves, hot cooking equipment

Prevent conductive materials from entering the multipurpose jack

Loose connections can cause explosion or fire.

Do not drop or cause an impact to the charger or the device

Do not bite or suck the device

Children or animals can choke on small parts.

Keep your device dry

If the device is wet, dry the device with a towel and take it to a service centre.

Do not use or store your device in areas with high concentrations of dust or airborne materials

Dust or foreign materials can cause your device to malfunction and may result in fire or electric shock.

Do not paint or put stickers on your device

- Paint and stickers can clog moving parts and prevent proper operation.
- If you are allergic to paint or metal parts of the device, you may experience itching, eczema, or swelling of the skin.

Do not disassemble, modify, or repair your device

Any changes or modifications to your device can void your manufacturer's warranty. If your device needs servicing, take your device to a Samsung Service Centre.

Correct disposal of this product

(Waste Electrical & Electronic Equipment)

(Applicable in countries with separate collection systems)

This marking on the product, accessories or literature indicates that the product and its electronic accessories (e.g. charger, headset, USB cable) should not be disposed of with other household waste.

To prevent possible harm to the environment or human health from uncontrolled waste disposal, please separate these items from other types of waste and recycle them responsibly to promote the sustainable reuse of material resources.

Household users should contact either the retailer where they purchased this product, or their local government office, for details of where and how they can take these items for environmentally safe recycling.

Business users should contact their supplier and check the terms and conditions of the purchase contract. This product and its electronic accessories should not be mixed with other commercial wastes for disposal.

This EEE is compliant with RoHS.

Correct disposal of batteries in this product

(Applicable in countries with separate collection systems)

This marking on the battery, manual or packaging indicates that the batteries in this product should not be disposed of with other household waste.

Where marked, the chemical symbols Hg, Cd or Pb indicate that the battery contains mercury, cadmium or lead above the reference levels in EC Directive 2006/66.

The battery incorporated in this product is not user replaceable. For information on its replacement, please contact your service provider. Do not attempt to remove the battery or dispose it in a fire. Do not disassemble, crush, or puncture the battery. If you intend to discard the product, the waste collection site will take the appropriate measures for the recycling and treatment of the product, including the battery.

FCC ID: A3LEJ-CT800

FCC Part 15.19

This device complies with part 15 of the FCC Rules. Operation is subject to the following two conditions: (1) This device may not cause harmful interference, and (2) this device must accept any interference received, including interference that may cause undesired operation.

FCC Part 15.21

Any changes or modifications (including the antennas) to this device that are not expressly approved by the manufacturer may void the user's authority to operate the equipment.

FCC Part 15.105 (B)

Note : This equipment has been tested and found to comply with the limits for a Class B digital device, pursuant to part 15 of the FCC Rules. These limits
are designed to provide reasonable protection against harmful interference in a residential installation This equipment generates, uses and can radiate
radio frequency energy and, if not installed and used in accordance with the instructions, may cause harmful interference to radio communications,
However, there is no guarantee that interference will not occur in a particular installation. If this equipment does cause harmful interference to radio or
television reception, which can be determined by turning the equipment off and on, the user is encouraged to try to correct the interference by one or
more of the following measures:
- Reorient or relocate the receiving antenna.
- Increase the separation between the equipment and receiver.
- Connect the equipment into an outlet on a circuit different from that to which the receiver is connected. - Consult the dealer or an experienced radio/
TV technician for help.

Modifications not expressly approved by the manufacturer could void the user a uthority to operated the equipment under FCC rules.

IC: 649E-EJCT800

This device complies with Industry Canada licence-exempt RSS standard(s).
Operation is subject to the following two conditions: (1) this device may not cause interference, and (2) this device must accept any interference, including interference that may cause undesired operation of the device.

Le présent appareil est conforme aux CNR d'Industrie Canada applicables aux appareils radio exempts de licence.
L'exploitation est autorisée aux deux conditions suivantes : (1) l'appareil ne doit pas produire de brouillage, et (2) l'utilisateur de l'appareil doit accepter tout brouillage radioélectrique subi, même si le brouillage est susceptible d'en compromettre le fonctionnement.