SAMSUNG

QUICK START GUIDE

EJ-PW700

Bluetooth C Pen

SAMSUNG

Printed in Korea
XXXXX Rev.1.0
E Type 03/2016

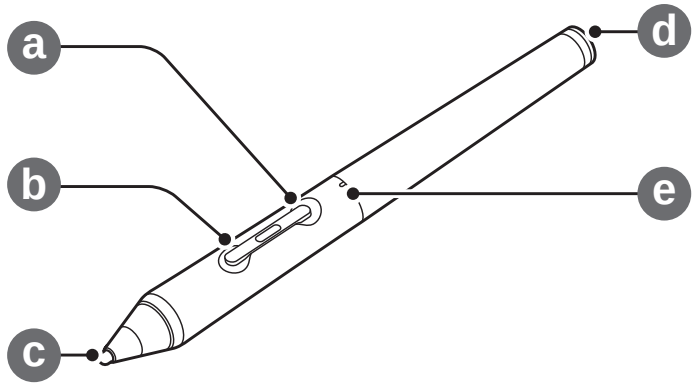

Copyright © 2016 Samsung Electronics

Bluetooth® is a registered trademark of Bluetooth SIG, Inc. worldwide.

- Please read this manual before using the device to ensure safe and proper use.
- Images may differ in appearance from the actual product. Content is subject to change without prior notice. You can access the full user manual for more information. Visit *www.samsung.com* to view device information, the user manual, and more.
- Your consumer rights are governed by the law of the country in which you purchased the product. Please contact your service provider for more information.

Device layout

a	Up button	d	Charger port
b	Down button	e	Indicator light
c	Pen nib		

Charging the battery

Charge the battery before using the BT C Pen for the first time or when the BT C Pen has been unused for extended periods.

Connect the BT C Pen to a charger.

- Chargers are sold separately.
- The charger should remain close to the electric socket and easily accessible while charging.
- The socket-outlet shall be installed near the equipment and shall be easily accessible.

3. Reattach the lid by aligning the clip on the lid with the buttons.

- If the clip and the buttons are not aligned, the lid cannot be reattached properly.
- Do not apply excessive pressure on the nib. Doing so may cause damage to the C Pen and the nib.

Checking the remaining battery power

Press and hold the Up button and the Down button simultaneously for three seconds. The indicator lights alerts you to the remaining battery power.

Colour	Battery power
Red	Less than 30%
Violet	30–60%
Blue	More than 60%

Connecting devices via Bluetooth

1. Press and hold the Up button or the Down button for approximately three seconds to enter Bluetooth pairing mode.
   The indicator light will flash red and blue.
2. On your other device, activate the Bluetooth feature and tap **Bluetooth C-Pen** from the list of available devices.

Using the C Pen

Various features, such as performing touch actions, writing on a connected device's screen, or launching apps, are available when the C Pen is connected to another device.

Refer to the user manual for more information.

Safety information

Read all safety information before using the device to ensure safe and proper use. To view the full safety information, refer to the Samsung website.

Use manufacturer-approved batteries, chargers, accessories, and supplies

Do not touch the device with wet hands

Do not drop or cause an impact to the charger or the device

The device can be used in locations with an ambient temperature of 0°C to 35°C. You can store the device at an ambient temperature of -20°C to 50°C. Using or storing the device outside of the recommended temperature ranges may damage the device or reduce the battery's lifespan

Do not allow children or animals to chew or suck the device

Do not disassemble, modify, or repair your device

Correct disposal

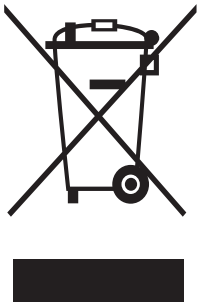

This marking on the product, accessories or literature indicates that the product and its electronic accessories (e.g. charger, headset, USB cable) should not be disposed of with other household waste.

This product is RoHS compliant.

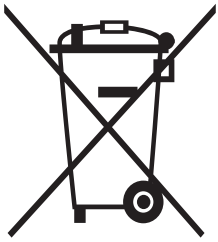

This marking on the battery, manual or packaging indicates that the batteries in this product should not be disposed of with other household waste.

For information on Samsung's environmental commitments and product-specific regulatory obligations, e.g. REACH, WEEE, Batteries, visit *samsung.com/uk/aboutsamsung/samsungelectronics/corporatecitizenship/data_corner.html*

FCC Statement

This device complies with part 15 of the FCC Rules. Operation is subject to the following two conditions: (1) This device may not cause harmful interference, and (2) this device must accept any interference received, including interference that may cause undesired operation.

Caution: Any changes or modifications not expressly approved by Samsung Electronics Co., Ltd. could void the user's authority to operate the equipment.

FCC Radiation Exposure Statement

This equipment complies with FCC Radiation exposure limits set forth for an uncontrolled environment. This equipment must not be co-located or operating in conjunction with any other antenna or transmitter.

Industry Canada Statement

This device complies with Industry Canada licence-exempt RSS standard(s). Operation is subject to the following two conditions: (1) this device may not cause interference, and (2) this device must accept any interference, including interference that may cause undesired operation of the device.

IC Radiation Exposure Statement

This equipment complies with IC radiation exposure limits set forth for an uncontrolled environment. This equipment must not be co-located or operating in conjunction with any other antenna or transmitter.

Le présent appareil est conforme aux CNR d'Industrie Canada applicables aux appareils radio exempts de licence. 'exploitation est autorisée aux deux conditions suivantes : (1) l'appareil ne doit pas produire de brouillage, et (2) l'utilisateur de l'appareil doit accepter tout brouillage radioélectrique subi, même si le brouillage est susceptible d'en compromettre le fonctionnement.

Déclaration d'Industrie Canada sur l'exposition aux radiations

Cet équipement est conforme aux limites établies par Industrie Canada en matière d'exposition aux radiations dans un environnement non contrôlé. Cet équipement ne doivent pas être colocalisés ou fonctionner en conjonction avec tout autre antenne ou émetteur.

Samsung Electronics (UK) Ltd, Euro QA Lab. Blackbushe Business Park. Saxony Way, Yateley, Hampshire, GU46 6GG, United Kingdom

CE