Contens (CD-ROM)

Before You Start 5

Charging with the Cradle 5
Charging without the Cradle 6
Connecting to External Equipment Using the Cradle . . . 7
Connecting GADGET and External Equipment 9
Time Display 10
Identifying the Parts (the main unit) 12
Inserting Memory Stick/
Operating Delete-Protection switch 14
Identifying the Parts (Cradle and Remote Control) 16
Selecting a Mode [Play] 18
Setting Menu Items 19
Quick Access 20
LCD Screen 23

Basic Usage 25

Reference Recordable Hours and Photo Count 25
Recording Movies (MPEG4 Video Recording) 27
Playing Back Movies (MPEG4 Video Playback) 28
Recording Still Images 29
Playing Back Still Images 29
Recording from a TV or VCR 30
Viewing on TV 31
Recording Sounds 32
Listening to Sounds in an Audio File 33
Listening to MP3 Music 34

Connecting to a PC 36

USB's Functions 36
PC Camera Function 36
Removable Disk Function 43
Connecting to a Printer 44

Enjoy Variety of Usages 45

Different Menu Settings 45

Precautions for Use 51

Precautions for Handling the Internal Hard Disk 51
Precautions on Handling the Camera 51
Precautions for Use - Concerning the Operating
Environment of the Supplied Software 52
Precautions for Cleaning the Unit and Handling
the Internal Lithium Cell 53
Precaution for Using “Memory Stick”/
“Memory Stick Pro” 54
Precautions for Handling the Lens and
the LCD Screen 56
Precautions for Charging and Handling
the Battery 57
Using GADGET Overseas 59

Troubleshooting 62

Troubleshooting 62

Additional Information 69

Major Specifications 69
Guarantee and Services 72

Before You Start

■ Charging with the Cradle

Using the cradle, you can charge GADGET's main and additional battery packs at the same time.

● Charging GADGET's Main Battery Pack

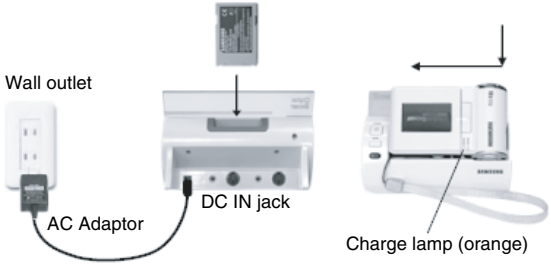

1 Connect the AC Adaptor to the cradle and then connect it to a wall outlet.
- The cradle's panel lights up blue.

2 Connect the GADGET unit to the cradle and power off the cradle.
- Charging starts.
- When completed, the charge lamp goes off.

● Charging the Additional Battery Pack

1 Insert the additional battery pack into the battery charging slot located on the cradle's rear panel.
- Charging of the additional battery pack starts.

NOTES

- At the time of purchase, the battery packs are not charged. Charge them before you start using this device.
- Charge time: about 90 minutes (for either the main or additional battery pack)
- You can charge the main battery pack only, the additional battery pack only or both battery packs at the same time.

■ Charging without the Cradle

You can charge the battery pack installed in the GADGET unit as it is.

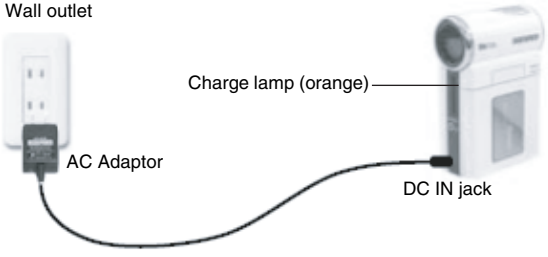

1 Connect the AC Adaptor to the GADGET unit and then connect it to a wall outlet.

2 Turn off the power.
- Charging starts.
- When completed, the charge lamp goes off.

Notes

- At the time of purchase, the battery packs are not charged. Charge them before you start using this device.
- Batteries cannot be charged when the GADGET unit is powered on. When charging, turn the Power switch to [OFF].

Installing a Battery Pack

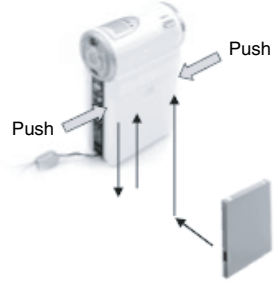

1 Push the upper section of both sides of the battery cover and slide the cover down to remove it.

2 Install a battery pack and reattach the cover in place.

■ Connecting to External Equipment Using the Cradle

The cradle can be useful for charging or connecting the device to external equipment (such as a TV set or a VCR).

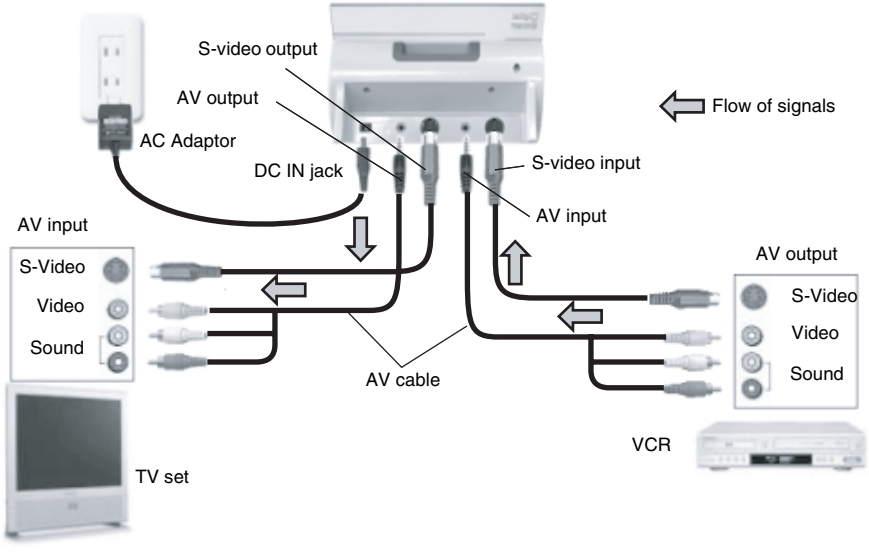

1 As shown in the diagram on the previous page, connect the GADGET unit to external equipment with the cable shipped with the device.

2 Connect the AC Adaptor to the GADGET unit and then connect it to a wall outlet.

- After that, go to the pages on the respective operations.
  - Charging ☛ Page xx
  - Basic operations (power on and selection of operating mode) ☛ Page xx
  - Menu operation ☛ Page xx
  - Recording from TV or video ☛ Page xx
  - Viewing on a TV set ☛ Page xx

Using the Connected External Equipment

You can use the connected external equipment as usual even when the GADGET unit is removed from the cradle or when it is powered off.

NOTE

- To record movies and/or still images recorded by GADGET on a video, output images from the GADGET unit to a VCR.

■ Connecting GADGET and External Equipment

Connect the GADGET unit and external equipment (such as a TV set or a VCR) using the multi-AV cable shipped with the device.

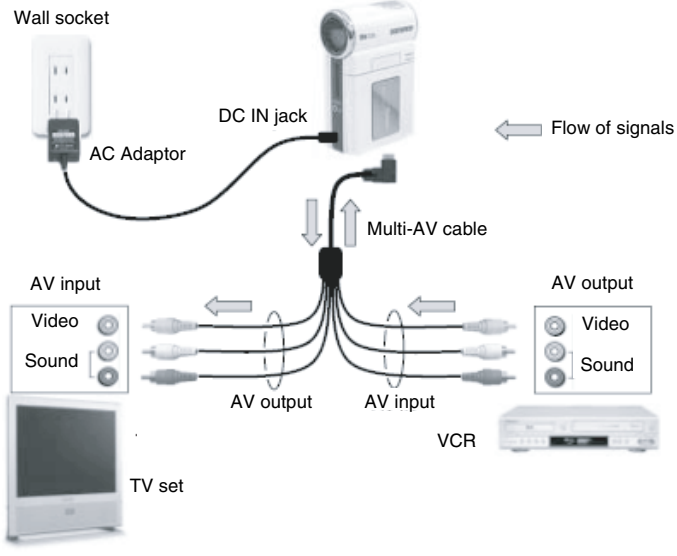

1 As shown in the diagram on the previous page, connect the GADGET unit and external equipment with the multi-AV cable shipped with the device.

2 Connect the AC Adaptor to the GADGET unit and then connect it to a wall outlet.

- After that, go to the pages on the respective operations.
  - Charging ☛ Page xx
  - Basic Operations (power on and selection of operating mode) ☛ Page xx
  - Menu Operation ☛ Page xx
  - Recording from TV or VCR ☛ Page xx
  - Viewing on TV ☛ Page xx

Notes

- To copy movies and/or still images recorded by GADGET to a video, output images from the GADGET unit to a VCR.

■ Time Display

You can check the current time any time except during image/video recording.

● When Connected to the Cradle

1 Turn off GADGET's power and connect it to the cradle with its LCD screen faced outward. (☛ Page xx)

- Powering on terminates the time display.

● When Using GADGET Alone

1 Hold down the Mode button for one second or longer.
- The current time appears on the LCD screen.
- Pressing a button restores the initial state.

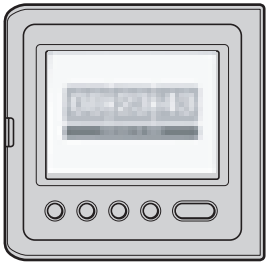

Notes

- Time display is disabled at the time of purchase. To use the time display function, set Time Display to [On] from the menu. (☛ Page xx)
- Two types of time display are available: analog and digital. You can choose the type you prefer from the menu.

■Identifying the Parts (the main unit)

Identifying the Parts - Main Unit

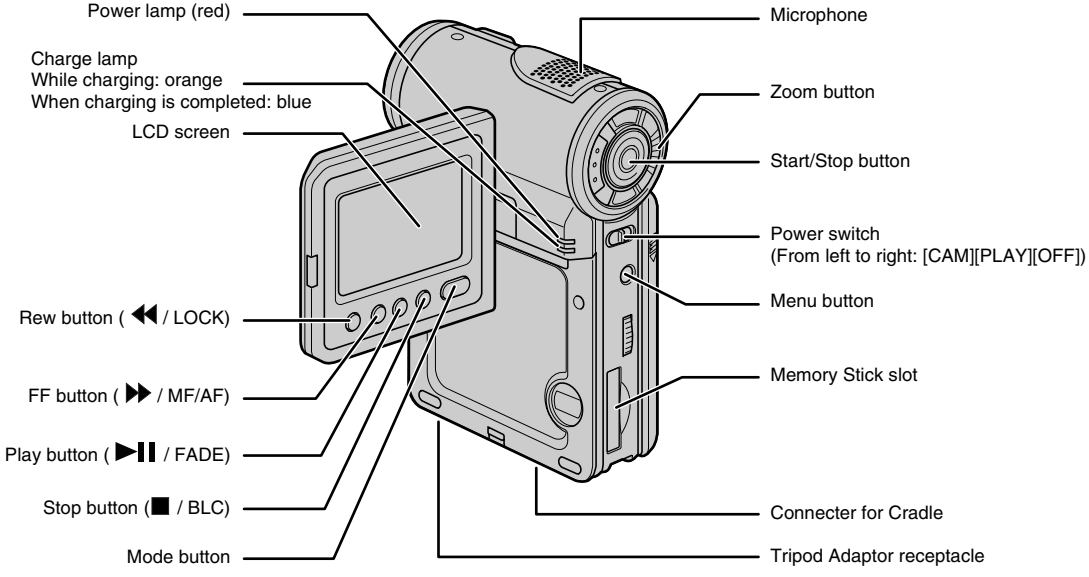

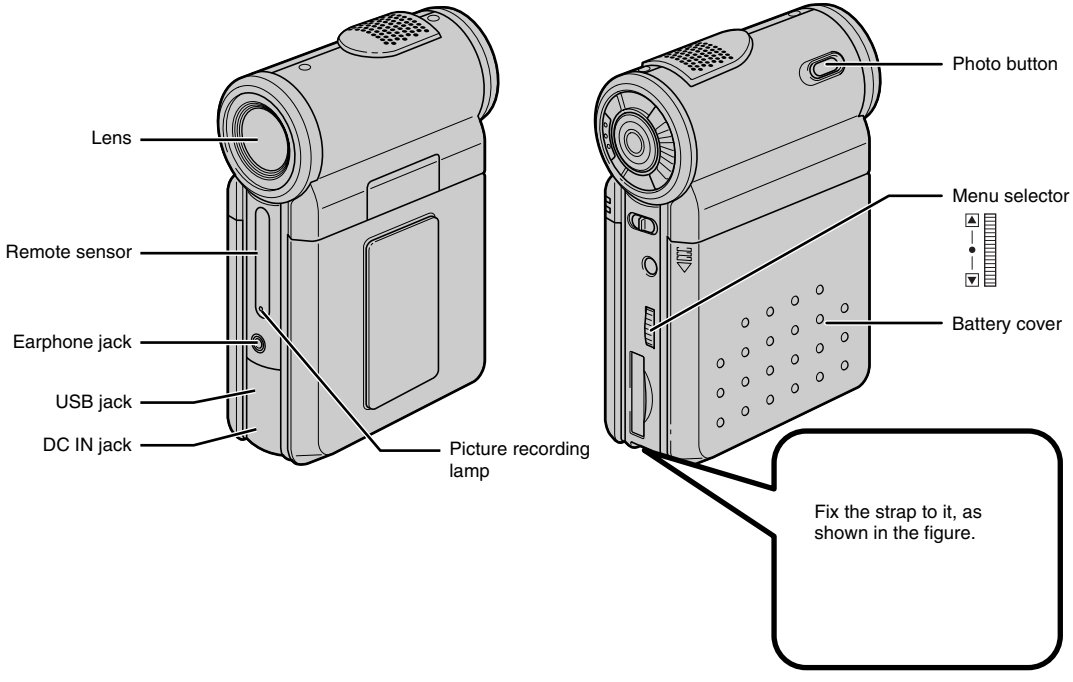
Lens
Remote sensor
Earphone jack
USB jack
DC IN jack
Picture recording lamp
Photo button
Menu selector
Battery cover
Fix the strap to it, as shown in the figure.

■ Inserting Memory Stick/Operating Delete-Protection switch

When handling the "Memory Stick"/"Memory Stick Pro", be sure to turn the Power switch to [OFF].

● Inserting

[014-i1]

(The lower section of the main unit's rear panel. Near the slot for the Memory Stick.
The Memory Stick is being inserted. The arrow indicates the inserting direction.)

1 Check the inserting direction indicated by the ▲ mark, and insert the Memory Stick as far as possible.

Notes

- Check the direction carefully. An attempt to insert the stick up-side-down or by placing it in the opposite orientation may damage the "Memory Stick"/"Memory Stick Pro" or the unit body.

● Removing

[014-i2]

(The same figure as the above. However, the arrow points to the opposite direction.)

1 Press down the "Memory Stick"/"Memory Stick Pro" softly and release it.
- The "Memory Stick"/"Memory Stick Pro" is pushed out.
- Do not attempt to pull it out without pressing it down.

2 Hold the "Memory Stick"/"Memory Stick Pro" by its tip and pull it out.

● Using the Delete-Protection switch

[014-i3]

(Memory Stick. The upper half of the rear section.
With a right arrow, pointing to the LOCK side.)

- Delete-Protection switch

1 Turn the Delete-Protection switch to “LOCK”.
- Only playback is enabled with all other functions (recording, deleting, and formatting) disabled.
- Resetting the switch enables the other functions, such as recording, again.

Notes

- Depending on the model, the location and/or appearance of the Dele-Protection switch may differ from those shown here.

■ Identifying the Parts (Cradle and Remote Control)

Cradle

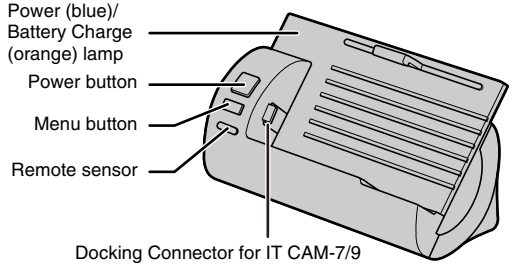

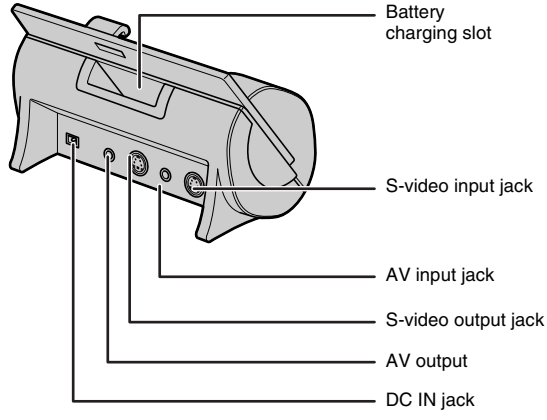

Remote Control

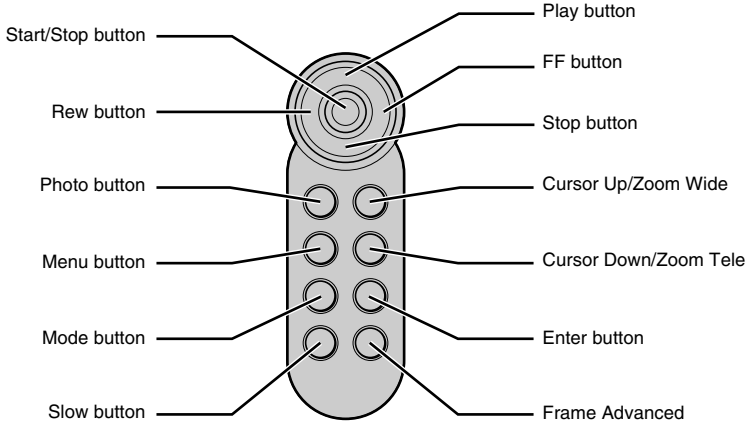

NOTE

- When using the Remote Control, check that the supplied lithium cell is installed in it.

■ Selecting a Mode [Play]

● When Connected to the Cradle (only for the Play Mode):

Select an operating mode with the GADGET unit connected to the cradle.

1 Turn on the power and press the Mode button.
• The operating mode selection screen appears.

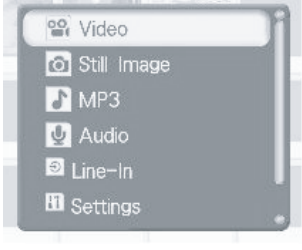

[Video]: Plays back movie files.
[Still Image]: Plays back still images.
[MP3]: Plays back music (in the MP3 format).
[Audio]: Plays back sounds recorded (in the WAV format) via the internal microphone.
[Line-In]: Records images from connected external equipment.
[Settings]: Sets the functions common to all modes.
[File Browser]: Checks the contents of the internal hard disk drive/“Memory Stick”/“Memory Stick Pro”.

2 Select an operating mode with the Rew button or the FF button on the LCD screen and finalize the selection with the Play button.

● When Using GADGET Alone

1 Set the Power switch to [CAM] or [PLAY], and press the Mode button.
• The operation selection screen appears.

◆In recording mode:

[Camera]: Records movies or still images.
[Line-In]: Records images from connected external equipment.
[Audio]: Records sounds via the via the internal microphone (in the WAV format).
[Settings]: Sets the functions common to all modes.
[File Browser]: Checks the contents of the internal hard disk drive/“Memory Stick”/“Memory Stick Pro”.

◆In playback mode:
[Video]: Plays back movie files.
[Still Image]: Plays back still images.
[MP3]: Plays back music (in the MP3 format).
[Audio]: Plays back sounds recorded (in the WAV format) via the internal microphone.
[Settings]: Sets the functions common to all modes.
[File Browser]: Checks the contents of the internal hard disk drive/“Memory Stick”/“Memory Stick Pro”.

2 Finalize the selection with the Menu selector.

■Setting Menu Items

Set menu items as follows:First, switch the operating mode and then display the Menu screen.

1 Set the Power switch to [CAM] or [PLAY].
- When the unit is connected to the cradle, press the Power button.

2 Using the Mode button, switch the operating mode and then press the Menu button.
- Menus that can be set up appear.

- Setting example for the [CAM] - [Camera] mode:

3 On the LCD screen, using the Rew button, FF button or Play button, finalize the selection (with the Menu selector when using GADGET's main unit alone). ([Example] [Still Photo Quality])

■ Quick Access

You can change the white balance or exposure through one-touch operation during image/video recording.

1 Set up for recording movies or still images. (☛ Page xx)
- Camera images appear on the LCD screen.

2 Press the Menu selector.
- The quick access menu items appear.

3 By moving the Menu selector up/down, select the item that you want to change. ([Example] Exposure)

- The settings for the selected item are displayed on the screen for several seconds.

4 Move the Menu selector up/down again to select a new setting item.

- Even if nothing is displayed on the screen, operating the Menu selector displays menu items.
- The display goes off several seconds after setting.

Notes

- [Focus] can be selected after switching to manual focusing using the FF button (MF/AF) on the LCD screen. Auto focusing cannot be used for selecting it.

Items Available for Quick Access

- [Volume]: Adjusts the earphone volume during recording.
- [Focus]: Enables focus to be adjusted manually. (You need to switch to manual focusing.)
- [Exposure]: Adjusts exposure.
- [White Balance]: Adjusts the color shade. Selecting [HOLD] for the set value displays a [ ] mark in the middle of the screen, enabling the color shade to be fixed to the current value. In this state, move the Menu selector downward to fix the color shade to whatever is displayed in the [ ] at that moment.

■ LCD Screen

● Identifying the Parts

[REC] mode

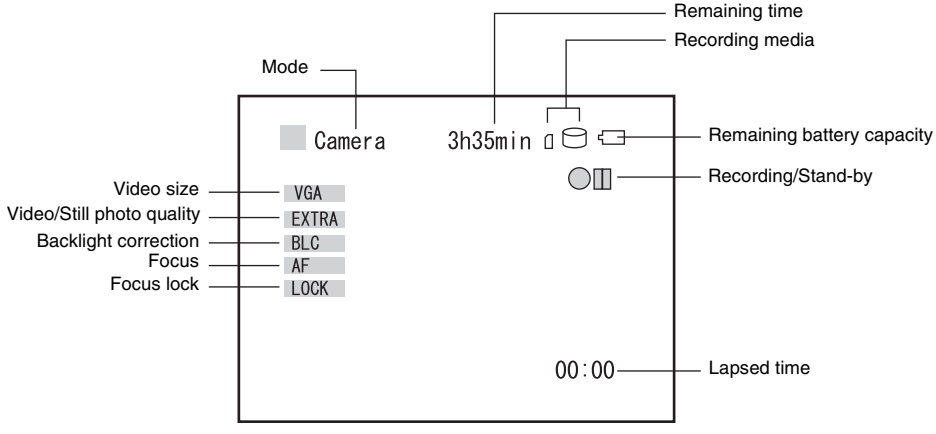

Notes

- The remaining time, remaining battery capacity, mode (record/stand-by) and lapsed time are displayed even after [Display] is set to [OFF].
- Recording media: hard disk/Memory StickThe one you have selected is displayed on the right in a larger size, while the one that is not selected is shown on the left in a smaller size. (If you have selected the hard disk and the Memory Stick has been inserted, the Memory Stick icon appears on the left in a smaller size. If it has not been inserted, the icon does not appear.)
- Video size: Indicates the size of the video to be displayed. VGA (640 x 480)/QVGA (320 x 240). You can switch over the size from the menu.
- Video/Still Photo Quality: Indicates the photo quality at the time of recording. [EXTRA]: Extra (for video)/Super Fine (for still images), [S-FINE]: Super Fine (for video)/Fine (for still images), [FINE]: Fine (for

video)/- (not applicable to still images). Use the menu to switch over the setting.

- Backlight Correction: BLC (enabled)/blank (disabled). You can switch over the setting with the Stop button on the LCD screen.
- Focus: AF (auto focus)/MF (manual focus). You can switch the setting with the FF button on the LCD screen.
- Focus Lock: LOCK (enabled)/blank (disabled). You can switch over the setting with the Rew button on the LCD screen.

[PLAY] mode

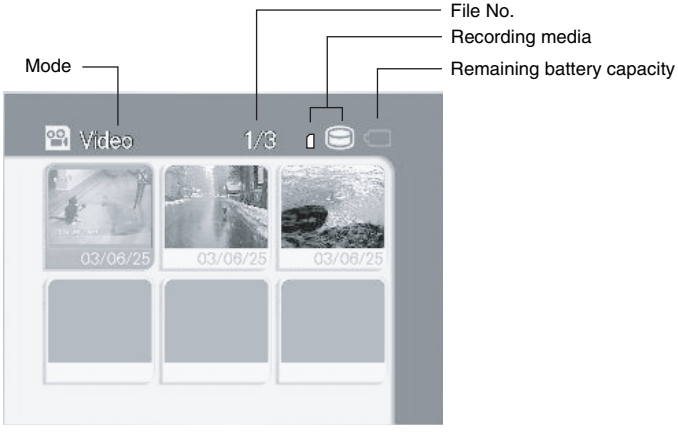

Notes

- These are displayed even after [Display] is set to [OFF].

Reference Recordable Hours and Photo Count

These values provide references for the time and the number of photos that the internal hard disk drive (1.5 GB) and the "Memory Stick"/"Memory Stick Pro" can record.

Notes

- "Memory Stick"/"Memory Stick Pro" may not be useable if it has been formatted on a device other than GADGET. Similarly, "Memory Stick"/ "Memory Stick Pro" that has been formatted in Explorer on a PC cannot be used. Re-format it on GADGET.

Notes

- When shooting movies in EXTRA mode, the compression ratio is automatically adjusted from scene to scene in order to achieve high photo quality. This in turn affects the recordable time, resulting in different recording times for different scenes.
- When using Memory Stick, recording cannot be guaranteed for VGA-sized movies. This is because the data transfer rate would fail to satisfy the minimum value specified for Memory Stick.

● Movies

		Extra		Super Fine		Fine	
		VGA (640×480)	QVGA (320×240)	VGA (640×480)	QVGA (320×240)	VGA (640×480)	QVGA (320×240)
Hard Disk	1.5 GB	About 20 - 120 minutes	About 150 - 250 minutes	About 60 minutes	About 150 minutes	About 90 minutes	About 200 minutes
Memory Stick	8 MB	×	About xx minutes	×	About xx minutes	×	About xx minutes
	16 MB	×	About xx minutes	×	About xx minutes	×	About xx minutes
	32 MB	×	About xx minutes	×	About xx minutes	×	About xx minutes
	64 MB	×	About xx minutes	×	About xx minutes	×	About xx minutes
	128 MB	×	About xx minutes	×	About xx minutes	×	About xx minutes

		Extra		Super Fine		Fine	
Memory Stick F	256 MB	About xx minutes	About xx minutes	About xx minutes	About xx minutes	About xx minutes	About xx minutes
	512 MB	About xx minutes	About xx minutes	About xx minutes	About xx minutes	About xx minutes	About xx minutes
	1 GB	About xx minutes	About xx minutes	About xx minutes	About xx minutes	About xx minutes	About xx minutes

● Still Images

		Super Fine	Fine
Hard Disk	1.5 GB	About 8,738 photos	About 17,476 photos
Memory Stick	8 MB	About 45 photos	About 91 photos
	16 MB	About 91 photos	About 182 photos
	32 MB	About 182 photos	About 364 photos
	64 MB	About 364 photos	About 728 photos
	128 MB	About 728 photos	About 1,456 photos
Memory Stick F	256 MB	About 1,456 photos	About 2,912 photos
	512 MB	About 2,912 photos	About 5,825 photos
	1 GB	About 5,825 photos	About 11,650 photos

● Sound

Hard Disk	1.5 GB	About 8 hours and 44 minutes
Memory Stick	8 MB	About 2 minutes
	16 MB	About 5 minutes
	32 MB	About 10 minutes
	64 MB	About 21 minutes
	128 MB	About 43 minutes
Memory Stick PF	256 MB	About 1 hour and 27 minutes
	512 MB	About 2 hours and 54 minutes
	1 GB	About 5 hours and 49 minutes

■ Recording Movies (MPEG4 Video Recording)

You can record movies in the MPEG4 format.

1 Turn the Power switch to [CAM] and press the Mode button to select [Camera].

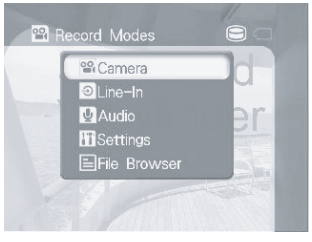

- Camera images appear on the LCD screen.

2 Press the Start/Stop button.
- Video recording starts.
- To stop recording, press the Start/Stop button again.

NOTE

- Image recording is disabled when GADGET is set in the cradle. Remove the main unit from the cradle before image recording.
- Recording movies again after you stop recording them once causes them to be saved in a new file.
- Press the Menu button to set the picture quality and other items.
- You can set the volume, focus, exposure, and white balance via the Quick Access function.

■ Playing Back Movies (MPEG4 Video Playback)

Play back MPEG4 video files in which you have recorded movies.

1 Turn the Power switch to [PLAY] and press the Mode button to select [Video].

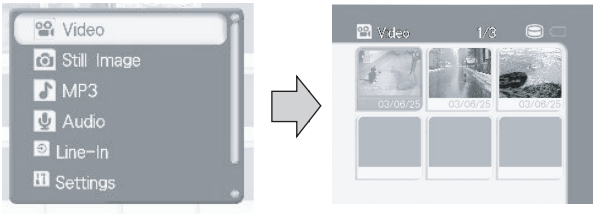

- A file list screen appears.

2 Move the Menu selector up or down to select the file you want to play back.

3 Press ▶II.

Operations

▶II: Playback/pause
■: Stop (returns to the file list)
◀◀/▶▶: Fast-rewind/fast-forward

To Play to End/Repeat:

While stopping, press the Menu button and set [Play Mode] under [Options] to either [Single Video], [Play to End], [Repeat] or [Repeat All].

Notes

- To play back audio files, connect earphones.
- You can adjust the volume with the Menu selector.

■ Recording Still Images

You can record still images.

1 Turn the Power switch to [CAM] and press the Mode button to select [Camera].

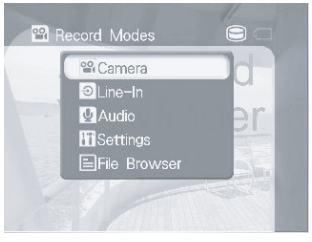

- A camera image appears on the LCD screen.

2 Press the Photo button.
- This records a still image.

Notes

- Image recording is disabled when GADGET is set in the cradle. Remove the main unit from the cradle before image recording.
- Press the Menu button to set picture quality and other items.
- You can set the focus, exposure and white balance via the Quick Access function.
- Sounds are not recorded.

■ Playing Back Still Images

Play back still images you have recorded.

1 Turn the Power switch to [PLAY] and press the Mode button to select [Still Image].

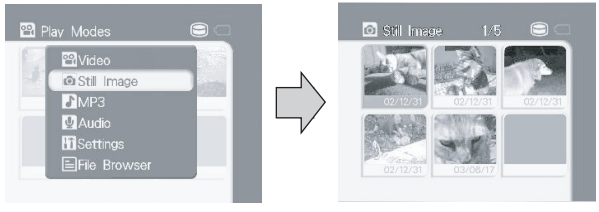

- A file list screen appears.

2 Move the Menu selector up or down to select the file you want to play back.

3 Press ▶II.
- The selected still image is displayed.

Playing Back All Still Images in Sequence (Slide Show)

While stopping, press the Menu button to select [Slide Show] under [Options]. You can change the switching time (☛ Page xx).

Operations

▶❚❚: Play/pause
■: Stop (Return to the file list)
◀◀/▶▶: Previous/next image

■ Recording from a TV or VCR

Record images from external equipment in GADGET.

1 Connect the GADGET unit to the cradle. Alternatively, connect the GADGET unit to external equipment with Multi-AV cables.
- When connecting to the cradle, turn the Power switch of the GADGET unit to [OFF].

2 Turn on the power and press the Mode button to select [Line-In].

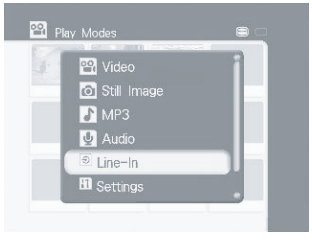

- The external equipment's image appears on the LCD screen.

3 Press the Start/Stop button on the Remote Control.
- Recording starts.
- To stop recording, press the Start/Stop button again.

NOTE
- Videos that contain a copyright signal (copy guard) cannot be recorded.

Automatic Recording

This function enables automatic video recording when timer recording is set.
In the state 3, if the external equipment is deactivated, the GADGET unit enters Recording Standby state. At the time set with the timer function, recording starts automatically as a video signal is received. When the video signal is lost, recording ends automatically.

NOTE
- Do not turn off the power in Standby state.
- Since recording starts on GADGET after receiving a video signal from external equipment, the first part of the video cannot be recorded for several seconds.

■ Viewing on TV

You can enjoy videos and still images on TV.

1 Connect the GADGET unit to the cradle.
Alternatively, connect the GADGET unit to external equipment with Multi-AV cables.
- When connecting to the cradle, turn the Power switch of the GADGET unit to [OFF].

2 Turn on the power and press the Mode button to select a desired playback mode.

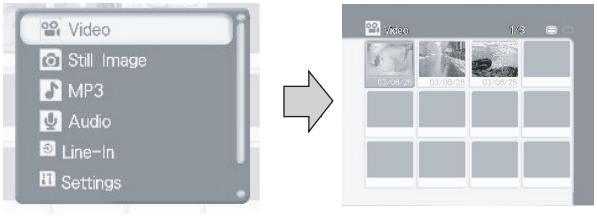

- When Selecting Video Mode:

- A file list screen appears.

3 Press [Cursor Up]/[Cursor Down] on the Remote Control to select the file you want to play back.

4 Press ▶II.
- Video playback starts.

■ Recording Sounds

Use the internal microphone to record sounds. You can also record still images while recording sounds.

1 Turn the Power switch to [CAM] and press the Mode button to select [Audio].

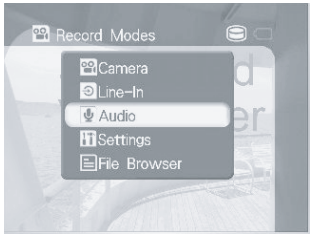

2 Press the Start/Stop button.
- Audio recording starts.
- To stop recording, press the Start/Stop button again.
- If still image recording is enabled, pressing the Photo button enables you to record still images.

NOTE

- Audio recording is disabled when GADGET is set in the cradle. Remove the main unit from the cradle before audio recording.
- Recording sounds again after you stop recording them once causes them to be saved in a new file.
- By setting the menu, you can record still images while recording sounds (☛ Page xx).
- Audio input from external equipment is disabled.

■ Listening to Sounds in an Audio File

You can play back audio files in which you have recorded sounds using GADGET.

1 Connect the earphones.

2 Turn the Power switch to [PLAY] and press the Mode button to select [Audio].

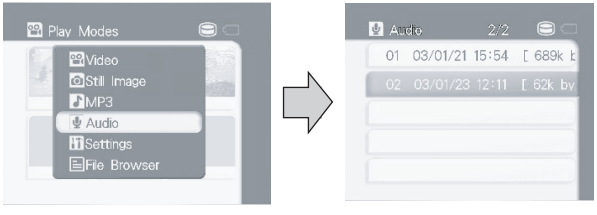

- An audio file list appears.

3 Move the Menu selector up or down to select the file you want to play back.

4 Press ▶II.
- Audio playback starts.

NOTE

• You can adjust the volume with the Menu selector.

Operations

▶❚❚: Playback/pause
■: Stop (returns to the file list)
◀◀/▶▶: Fast-rewind/fast-forward

To Play to End/Repeat:

While stopping, press the Menu button and set [Repeat] under [Options] to either [Single Audio File], or [Repeat All].

■ Listening to MP3 Music

You can listen to music by copying MP3 music files from a PC to GADGET.

1 Turn the GADGET unit's Power switch to [PLAY] and connect to a PC (☛ Page xx). Then copy MP3-format files to GADGET's hard disk or to "Memory Stick"/"Memory Stick PRO".
• Copy MP3 files to the [free] folder under the [MP3] folder (☛ Page xx).

2 Disconnect GADGET from the PC (☛ Page xx) and press the Mode button to select [MP3].

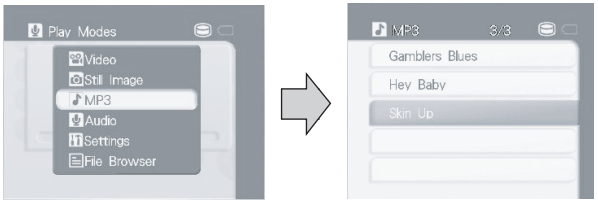

3 Move the Menu selector up or down to select the file you want to play back.

4 Press ▶❚❚.
- Music playback starts.
- GADGET supports MP3 ID3 tags. During playback, the song title, album title, and artist name listed in the ID3 tag appear on the screen.

Operations

▶❚❚: Playback/pause
■: Stop (returns to the file list)
◀◀/▶▶: Previous/next file

Changing Display

You can change the display to still image display (Slide Show).
After selecting [MP3] with the Mode button, set display from the [Options] menu.

Notes

- Song title information may be incorrectly displayed in part.
- You can create up to three folders under the MP3 folder.
- Example: Naming a folder
  [MP3] - [Genre] - [Artist] - [Album] - 01 - Song title .mp3
  [MP3] - [Artist] - [Album] - 01 - Song title .mp3

Connecting to a PC

GADGET can be connected to a PC or a printer that has direct printing capability via the USB interface.

■ USB's Functions

The USB interface provides the following three functions:

● PC camera function
When connected to a PC with its Power switch set to [CAM], GADGET functions as a PC camera. This function enables transmission of current videos to a communications application such as Windows Messenger (which requires a specified USB driver, Image Mixer and DviX to be installed).

● Removable disk function
When connected to a PC with its Power switch set to [PLAY], GADGET can function as an external hard disk for a PC, reading and writing data.

● USB direct printing function
When connected to a to a printer that has a USB direct print function with its Power switch set to [PLAY], GADGET can print still images selected on it without a PC.

■ PC Camera Function

When connected to a PC, GADGET can function as external storage or a PC camera. This function requires the specified USB driver and software to be installed.

Note

• For the power supply, be sure to use the AC adaptor.

● Installing the USB driver [Windows]
Install the USB driver onto a PC to prepare for connecting the GADGET unit to the PC.

1 Terminate other applications and insert the supplied CD-ROM.
• Do not connect the USB cable before installing the USB driver.

2 Select [Install USB driver] from [Software Installation].

3 Complete the installation, following the instructions on the screen.
• Restart the machine to enable the USB driver.

NOTE

- In the following cases, uninstall (☛ Page xx) the USB driver, and then reinstall it.
  - You have connected the USB cable before completing the installation.
  - You have canceled the installation before its completion.

● Installing the USB driver [Macintosh]

Install the USB driver onto Macintosh to prepare for connecting the GADGET unit to the Macintosh.

1 Terminate other applications and insert the supplied CD-ROM into the CD slot.
- Do not connect the USB cable before installing the USB driver.

2 From [Software Installation], click on [Installing USB Driver] and install the USB driver to the Macintosh [System Folder] by the drag-and-drop technique.
- Restart the machine to enable the USB driver.

NOTE

- In the following cases, uninstall (☛ Page xx) the USB driver, and then reinstall it.
  - You have connected the USB cable before completing the installation.
  - You have canceled the installation before its completion.

● Uninstalling the USB Driver

When the USB driver cannot be installed normally, uninstall the driver, and then reinstall it.

● Windows

1 Power on the PC and start Windows.

2 Connect the AC adaptor to GADGET and turn the Power switch to [CAM] or [PLAY].

3 Connect GADGET's USB jack to the PC's USB jack with the supplied USB cable.

4 Open the PC's [Device Manager].

◆For Windows 2000 Professional:

Open [My Computer] →[Control Panel] → [System] →[Hardware], in this order, and click on [Device Manager].

◆For other Windows OS's

Open [My Computer] →[Control Panel] → [System], in this order, and click on [Device Manager].

5 Delete devices marked “?” from the entries under [Other Devices].

6 Power off GADGET and remove the USB cable.

7 Restart the PC.

8 Reinstall the USB driver (☛ Page xx).

● Macintosh

1 From the Extensions folder inside the System folder, select the two files installed on Page xx and put them into the Trash.

2 Restart your Macintosh.

3 Reinstall the USB driver (☛ Page xx).

● Installing DivX [Windows]

The DivX software enables GADGET to function as a PC camera, displaying images on the screen of the PC.

1 Terminate other applications.

2 Insert the supplied CD-ROM into the PC's CD slot.
- The installation screen appears. If the installation screen does not appear, open the CD-ROM drive icon under [My Computer], and double-click on [DivX Installation].

3 Click on [DivX Installation].

[037-s1]

4 Follow the instructions on the screen to proceed with the installation procedure.

5 Click on [Finish].

6 Restart the PC.
- DivX is enabled after restarting the PC.

Notes

- To uninstall DivX, use [Adding/Removing Programs (Applications)] from the [Control Panel].
- For details on how to use DivX, see the online help.

● Installing DivX [Macintosh]

1 Terminate other applications.

2 Insert the supplied CD-ROM into the Macintosh CD slot.
- The installation screen appears. If it does not appear, open the CD-ROM icon and double-click on the installation menu icon to go to the installation screen.

3 Click on [DivX Installation].

[038-s1]

4 Double-click the installer icon.

5 Follow the instructions on the screen to proceed with the installation procedure.

6 Restart your Macintosh after completing the installation.
- DivX is enabled after restarting the Macintosh.

Notes
- To uninstall DivX, put the folder containing the installed DivX into the Trash.
- For details on how to use DivX, see the online help.

● Installing PIXELA ImageMixer [Windows]

The PIXELA ImageMixer software is used to edit video or audio files.

1 Terminate other applications.

2 Insert the supplied CD-ROM into the PC's CD slot.
- The installation screen appears. If the installation screen does not appear, open the CD-ROM drive icon under [My Computer], and double-click on [PIXELA ImageMixer Installation].

3 Click on [PIXELA ImageMixer Installation].

[040-s1]

4 Select the language to be used from the list.

5 Follow the instructions on the screen to proceed with the installation procedure.

6 Click on [Finish].

Notes
- To uninstall PIXELA ImageMixer, use [Adding/Removing Programs (Applications)] from the [Control Panel].
- For details on how to use PIXELA ImageMixer, see the online help.

● Installing PIXELA ImageMixer [Macintosh]

1 Terminate other applications.

2 Insert the supplied CD-ROM into the Macintosh CD slot.
- The installation screen appears. If it does not appear, open the CD-ROM icon and double-click on the installation menu icon to go to the installation screen.

3 Click on [PIXELA ImageMixer Installation].

[038-s1]

4 Double-click the installer icon for the language to be used.

5 Follow the instructions on the screen to proceed with the installation procedure.

6 Restart your Macintosh after completing the installation.
- PIXELA ImageMixer is enabled after restarting the Macintosh.

Notes

- To uninstall PIXELA ImageMixer, put the folder containing the installed PIXELA ImageMixer into the Trash.
- For details on how to use PIXELA ImageMixer, see the online help.

● Using as a PC Camera

1 Start the PC.

2 Turn the Power switch to [CAM].

3 Connect the GADGET unit to the PC.

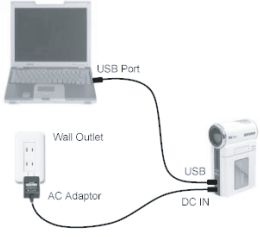

- GADGET can be used as a PC camera for programs such as Windows Messenger. Its usage may vary depending on the software. See the documentation of the respective software products.

Notes

- Complete installation of the USB driver on the PC beforehand. Connecting the USB cable before driver installation causes the USB driver installation to fail (☛ Page xx).
- The PC camera function cannot be used while the device is connected to the cradle. Remove the device from the cradle and connect it to the PC.
- Using a USB hub or connecting two or more USB devices at a time may hinder GADGET's normal operation. In that case, disconnect all USB devices from the PC, and then reconnect GADGET to the PC.
- After installing the USB driver, follow the message displayed to complete installation of the USB driver when connecting the GADGET unit to a PC with the USB cable for the first time.
- A PC that supports USB 2.0 enables fast data transfer.
- When cables, other than the supplied ones, that do not support the USB specifications are used, no guarantee of proper operation is provided.
- When connected to a PC, the GADGET operates in PC-only mode. To operate the GADGET unit, disconnect it from the PC.

Disconnecting the USB Cable without Powering Off

● For Windows

Click the “Removing hardware” icon in the task tray and check that the “USB high-volume storage device can be removed safely” message is displayed before disconnecting the cable. (No icon is displayed on Windows 98 Second Edition. Check that data transfer has been completed before disconnecting the cable.)

● For Macintosh

Put the icon for GADGET into the Trash before disconnecting the cable.

■ Removable Disk Function

You can use GADGET's internal hard disk and “Memory Stick”/ “Memory Stick Pro” as a PC's external storage.

● Using as External Storage

1 Connect the GADGET unit to a PC (☛ Page xx).

2 Set the Power switch to [PLAY].
- The PC recognizes GADGET's internal hard disk or “Memory Stick”/“Memory Stick Pro” as external storage (that is a removable disk), and the drive icon appears in [My Computer] (for Windows). Or, the desk top displays the drive icon (for Macintosh).

3 Execute operations such as moving/copying/ deleting a file.

4 Power off the PC, and then turn GADGET's Power switch to [OFF].

NOTE

- Do not disconnect the USB cable during data transmission.
- When using the device as external storage, you do not need to install any specified USB driver or software.

● Folder Structure

Recorded data are stored in the internal hard disk drive or “Memory Stick”/“Memory Stick Pro”, as illustrated below.

● Folder structure at a glance

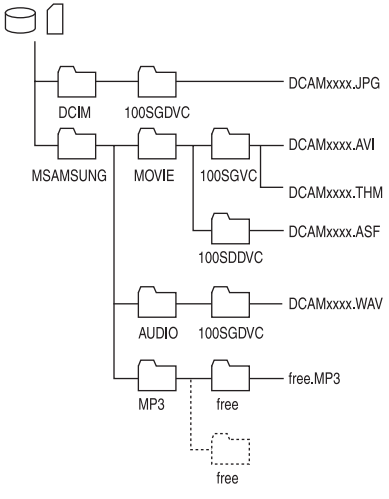

Note

- DCAMxxxx. JPG: still images, DCAMxxxx. AVI: movies, DCAMxxxx. THM: thumbnails, DCAMxxxx. ASF: video files created on Samsung or other models, DCAMxxxx. WAV: audio files.
- The xxxx portion represents an assigned number.
- Except for the [free] folder, do not rename or delete any folders. GADGET's normal operation might fail if you do.
- You can assign any desired name to [free].
- One folder can contain up to 100 files or folders.

■ Connecting to a Printer

Connecting to a printer that has a USB direct printing function enables printing of still images selected on your GADGET unit to be printed without a PC.

1 Connect GADGET to a printer with a USB cable and turn GADGET's Power switch to [PLAY].

2 Press the Mode button and select a still image.

3 Using the Menu button, select [Print].

Note

- To use the device while it is being connected to the cradle, power on the cradle in step 1.

Enjoy Variety of Usages

■ Different Menu Settings

You can change menu settings from their states at the time of purchase.

● Power switch: [CAM]

		★ FInitial settings.
Camera		
Video Quality		Extra ★ Super Fine Fine
Video Size		★ VGA (640×480) QVGA (320×240)
Still Photo Quality		★ Super Fine Fine
Options	Self Timer	Time: ★ Off 5 Seconds 10 Seconds
	Video Effects	★ Off Art (Rough) Black & White Negative (Inverted) Sepia
	Program AE	★ Auto Sports (Blurring-proof) Spotlight (Overexposure-proof)
Exposure		★ Auto –7 - +7
Shutter		★ Auto 1/60 - 1/10000
White Balance		★ Auto Indoor Outdoor Hold (Fixed at the current white balance)
Line-In		
Video Quality		Extra ★ Super Fine Fine
Video Size		★ VGA (640 x 480) QVGA (320 x 240)
Audio Recording		
Enable Photo		★ Off On
Still Photo Quality		★ Super Fine Fine
White Balance		★ Auto Indoor Outdoor Hold (Fixed at the current white balance)

Settings	(Menu items are common to [CAM] and [PLAY].)	
Select Storage		★ Hard Disk Memory Stick
Display	Display	Off ★ On Auto Off
	Back Light	Off ★ On Auto Off
	LCD Brightness	–(0)+
	LCD Color	–(0)+
	Display Mode	★ Auto LCD (Large-size characters) TV (Small-size characters)
	Color Scheme	★ Orange Blue Green Pink
	Time Display	Off ★ On
	Boot Screen	Off ★ Default Select Photo
Setup	Set Date/Time	Internal clock settings
	Date Format	★ YY/MM/DD DD/MM/YY MM/DD/YY
	Auto Shutoff	Off (Auto Shutoff disabled) 30 Seconds ★ 1 Minute 5 Minutes

* Auto Shutoff is enabled when running on the internal battery. When running on an external battery, the power cannot be turned off automatically.

Remote Control	★ Off (Disabled) On (Enabled)
Language	★ English Korean Japanese
Video System	★ NTSC (Japan, Korea, USA, etc.) PAL (Europe, China, Africa, etc.)
Version Info	GADGET version

Format		★ Hard Disk Memory Stick

* Formatting deletes all files including protected ones, and they can never be restored. Consider carefully before formatting.
* While formatting, do not change the Power switch position, operate GADGET, or remove the Memory Stick.
* "Memory Stick"/"Memory Stick Pro" can not be used if it has been formatted on a PC. Reformat it on GADGET.
* Formatting cannot be performed when the Delete-Protection switch on the Memory Stick is set to [LOCK].

Demo Mode		Off ★ On Start Now
File Browser	(Check the data stored on the hard disk or Memory Stick.)	
		Audio DCIM Movie MP3

● Power switch: [PLAY]

		★ FInitial settings.
Video		
Options	Play Mode	★ Single Video Play to End Repeat Repeat All
	Play Multiple	Display Multiple Movie Files
	Display Screen Size	Actual Size ★ Full Screen
Delete		★ Delete This Video Delete All Video Files File Number Reset (Reassigns by starting with 0001.) ★ No Yes Select Multiple
Protect		★ Protect This Video (Cancels protection if it is protected.) Protect All Video Files Cancel Protection of All Video Files Select Multiple

* When listed in a table, protected files appear with a key icon. When checked in File Browser, they are marked “Protected.”
* Setting the Delete-Protection switch on Memory Stick to [LOCK] causes all files on the Memory Stick to be protected.
* When the Delete-Protection switch on the Memory Stick is set to [LOCK], no key icon appears.

Copy to Memory Stick (Or Copy to Hard Disk)	★ Copy This Video Copy All Video Files Select Multiple Copy All Files

Still Images

Select Storage		★ Hard Disk Memory Stick
Options	Slide Show	On ★ Off
	Play Multiple	Display Still Image
	Repeat	On ★ Off
	Slide Show Switching Time	★ 3 Seconds 5 Seconds 10 Seconds

* It takes longer than the set time for large-size still images recorded on other digital cameras to be displayed. (Reference: It takes about 10 seconds to display an image of about 3 mega (million) pixels.)
* The still image display function supports images ranging from QQVGA (162 x 120 dots) up to 5 mega pixels.

Delete	Still image files to be deleted: ★ Delete This Image Delete All Images File Number Reset (Reassigns by starting with 0001.) ★ No Yes Select Multiple
Protect	★ Protect This Still Photo Protect All Still Photos Cancel Protection of All Still Photos Select Multiple

* Setting the Delete-Protection switch on Memory Stick to [LOCK] causes all files on the Memory Stick to be protected.

Print

★ Print This Still Photo

Enter the number of copies to print out.

↓

When the unit is connected to a USB direct printing-enabled printer:

Select “Save to DPOF file” or “Start Print.”

When the unit is not connected to a USB direct printing-enabled printer:

The number of copies to be printed out is saved in the DPOF file.

Print All Still Photos
Enter the number of copies to print out.
↓
When the unit is connected to a USB direct printing-enabled printer:
Select “Save to DPOF file” or “Start Print.”
When the unit is not connected to a USB direct printing-enabled printer:
The number of copies to be printed out is saved in the DPOF file.

Select Photo
Save Number of Copies to DPOF File
Or
Start Print (This setting cannot be selected when not connected to a printer that supports USB direct printing.)
Or
Cancel

DPOF Print (Cannot be selected if no DPOF file exists.)

Clear DPOF File (Cannot be selected if no DPOF file exists.)

GADGET is compliant with the DPOF (Digital Print Order Format) standards. A DPOF-compliant printer can be used to automatically print out photos specified on GADGET. You can select the still photo you want to print and specify the number of copies needed. Or you can choose to print all still photos in the number you specify.
What you have specified is saved in the DPOF file.
Additionally, GADGET supports USB direct printing. You can connect the device to a printer that supports USB direct printing to directly print from the printer without using a PC.

Copy to Memory Stick (Or Copy to Hard Disk)	★ Copy This Still Image Copy All Images Select Multiple Copy All Files

MP3

Song Selection		★ Select Title Select Artist Select Album Select Genre Select Folder

* Tag information in the MP3 file is used for Select Artist, Select Album, and Select Genre. For Select Folder, folder information is used.

Options	Random	★ Off On
	Play Multiple	Play Song
	Repeat	★ Off Song All (All songs associated with the current folder, artist, album, genre or all)
	Display	★ Song Information Slide Show: All still images Slide Show: Selected still images Slide Show switching time ★3 Seconds 5 Seconds 10 Seconds
Delete		★ Delete This MP3 File Delete All MP3 Files Select Multiple

Protect	★ Protect This MP3 File Protect All MP3 Files Cancel Protection of All MP3 Files Select Multiple

* Setting the Delete-Protection switch on Memory Stick to [LOCK] causes all files on the Memory Stick to be protected.

Copy to Memory Stick (Or Copy to Hard Disk)	★ Copy This MP3 File Copy All MP3 Files Select Multiple Copy All Files

Audio		
Options	Play Multiple	Play Multiple Audio Files
	Repeat	★ Off Audio File Repeat All Audio Files
Delete		★ Delete This Audio File Delete All Audio Files File Number Reset (Reassigns by starting with 0001.) ★No Yes

Protect	★ Protect This Audio File Protect All Audio Files Cancel Protection of All Audio Files Select Multiple

* Setting the Delete-Protection switch on Memory Stick to [LOCK] causes all files on the Memory Stick to be protected.

Copy to Memory Stick (Or Copy to Hard Disk)	★ Copy This Audio File Copy All Audio Files Select Multiple Copy All Files

Settings	
The menu items are the same as those when the Power switch is set to [CAM].	
File Browser	(Check the data stored in the hard disk or Memory Stick.)
	Audio DCIM Movie MP3

Precautions for Use

Precautions for Handling the Internal Hard Disk

- Using hard disk management tools (such as a partition management tool) for a PC may disable the hard disk.
- High-precision manufacturing technology is applied to fabrication of the hard disk. Therefore it is highly sensitive to impact, temperature, and humidity, and it can become faulty due to such factors.
- Do not cause impact to the device while it is operating. That may damage the hard disk head or the magnetic disk that records and plays data to and from the hard disk. If damaged, the hard disk needs to be replaced.
- Any hard disk failure disables the reading of any data recorded on it.
- Even when the hard disk has been used correctly, we cannot recover data loss due to hard disk failure nor can we compensate for it.
  Be sure to copy any valuable data to your Memory Stick or make a backup copy of such data.

Precautions on Handling the Camera

- Use GADGET away from other equipment. Strong magnetism from a speaker or a large-sized motor may distort images on the display. Also, radio interference between a TV set/game machine and GADGET may lead to poor image reception on either or both of these devices.
- In case GADGET does not operate normally because of magnetism or radio waves, remove the battery and the AC adaptor. Then reconnect them and turn on the power again.
- If a radio tower or high-voltage cable exists in the surrounding area, the quality of recorded images and sounds may be affected by the radio waves and/or high voltages involved.
- When using insecticide or any volatile substances around the GADGET unit, take care to prevent the substance form being sprayed on the GADGET unit. Such substances may deteriorate its outer jacket or cause paint to peel off.
- Do not allow rubber or vinyl products to be in contact with the GADGET unit for a long time.
- When using GADGET on a beach or any other places exposed to sand or dust, take care not to allow sand/dust to enter inside the device or the jack sections. Intrusion of sand/dust may cause failure.

- Do not allow the device to come in contact with seawater or any water. If that ever happens, wipe the device body with a wet cloth after fully wringing it out. Then wipe it with a dry cloth.
- When carrying the GADGET unit, take care not to drop or hit it against any object. High impact may damage the outer jacket, leading to failure.
- Do not use the device for business purposes such as monitoring. GADGET is not designed to serve such business purposes. Using it at length may cause heat to accumulate inside the device, resulting in failure.

● When GADGET is not used for long periods:

When GADGET is not used for a long time, follow the instructions below for storing it.

- Set the Power switch to [OFF].
- Remove the power source such as the battery or the AC adaptor.
- Avoid storing it in such places as follows:
  - Places that are exposed to dust or sand
  - Places that are affected by magnetism, radio waves or static electricity
  - Places that are exposed to high temperature, high humidity or direct sunlight

■ Precautions for Use - Concerning the Operating Environment of the Supplied Software

● Windows environment

- CPU: Pentium xx, xx MHz or above.
- OS: Windows 98SE/ME/2000/XP. (PC/AT compatible computer with the Japanese version preinstalled.)
- Memory: xx MB or more
- Free space on the hard disk: xx MB or more (Space of xx MB or more is recommended.)
- Display resolution: 800 x 600 dots or higher
- Provided with a USB port.
- With Windows Media Player xx or later installed
- With DirectX xx or later installed

● Macintosh environment

- OS: MacOS 9.1 - 9.22 (Macintosh with one of these versions preinstalled)
- Memory: xx MB or more
- Free space on the hard disk: xx MB or more (Space of xx MB or more is recommended.)
- Display resolution: 800 x 600 dots or higher
- Provided with a USB port

NOTE

- Not all PCs configured with the above environment are subject to guarantee of proper operation.
- PCs used via a USB hub or with a USB card are out of the scope of guarantee.
- If your OS is Windows 2000/XP, log in as the [Administrator (administrator of the PC)] (or a user with the equivalent privileges) to install the OS.

Precautions for Cleaning the Unit and Handling the Internal Lithium Cell

Cleaning

- Wipe dust off the main unit using a soft, dry cloth. Do not use a solvent such as benzine or thinner. Such solvents may deteriorate the outer jacket or cause paint to peel off. If the jacket is heavily soiled, soak a wipe in thinned kitchen detergent, wring it out well, and wipe the jacket with it. Then, finish with a dry cloth.
- When using a chemically treated wipe, follow the accompanying instructions.
- If fingerprints are left on the lens or if you used GADGET in a highly humid place or in a place that may be affected by salt, such as a seashore, be sure to wipe the lens surface with a soft wipe.
- If the LCD screen is soiled with fingerprints or dirt, wipe it with the supplied wiper (for ITCAM-9 only) or with a dry, soft wipe.

● Internal Rechargeable Lithium Cell

GADGET incorporates a rechargeable lithium cell that stores the date and other settings even when the AC adaptor and the battery are removed.
The rechargeable lithium cell is automatically recharged when GADGET is used. If the device is not used at all, the cell runs down in a week, and the time is displayed like this: .“- - -.” In this case, connect the AC adaptor to GADGET or install a battery into it, then turn the Power switch to [PLAY] or [CAM]. Then leave it for xx hours or longer. After that, set the date again (☛ Page xx).
Note, however, that GADGET operates normally even when the lithium cell has drained if you do not need date recording.

Notes

- If date setting fails even after the internal rechargeable lithium cell is fully charged, contact our service agent available to you (☛ Page xx).
- Recycling of lithium cells is encouraged since they contain precious resources of which only small deposits have been identified. As for disposal of GADGET after you have finished using it, bring it to our recycling agent.

■ Precaution for Using “Memory Stick”/ “Memory Stick Pro”

● Using and Storing

- Do not make contact with the jacks or allow any metal to make contact with them.
- Do not affix any item other than the prepared labels.
- Do not cause high impact to it, bend it, or drop it.
- Do not disassemble or alter it.
- Keep it off water.
- Avoid using or storing it in places as described below:
  - In a heated car, under the blazing sun, or in any place exposed to high temperature
  - Under direct sunlight
  - In a place exposed to high humidity or corrosive effect
  - When carrying or storing GADGET, keep it in the case supplied with your “Memory Stick”/“Memory Stick Pro”.
- Data may be destroyed if GADGET is used in any of the following ways:
  - If the “Memory Stick” or “Memory Stick Pro” is removed or the unit's power is shut off while writing or reading data.
  - If the unit is used under the influence of static electricity or electrical noise.

- If data in your “Memory Stick” or “Memory Stick Pro” has been destroyed or lost due to inappropriate usage, Samsung shall not be liable for any loss whatsoever.
- We recommend that you back up important data by copying them to your PC'S hard disk.

Image Compatibility

- GADGET is compliant with the “Design rules for Camera File systems” standard, a unified standard established by the Japan Electronics and Information Technology Industries Association. Static images recorded on devices not compliant with the unified standard cannot be displayed on GADGET.
- If a “Memory Stick”/“Memory Stick Pro” used on another device will not operate, format the “Memory Stick”/“Memory Stick Pro” on your GADGET (☛ Page xx). Note that formatting erases all data recorded on the “Memory Stick”/“Memory Stick Pro”.

Formatting “Memory Stick”/“Memory Stick Pro”

“Memory Stick”/“Memory Stick Pro” formatted on a PC is not guaranteed to operate on GADGET. Formatting must be performed on GADGET (☛ Page xx).

Notes

- “Memory Stick”/“Memory Stick Pro” is a trademark of Sony Corporation.
- Other system names and product names used in this document may be trademarks or registered trademarks of the respective owners. Note that the symbols for trademarks/registered trademarks, such as “TM” or “(R),” may not be explicitly used in this document.

■ Precautions for Handling the Lens and the LCD Screen

● Handling the Lens

- When the lens is cloudy, turn off the Power switch and let the device stand for about an hour. The cloudiness will disappear when the unit has caught up with the ambient temperature.
- In order to prevent fungi, keep the device in a clean place with adequate ventilation. We recommend that you operate GADGET with the power on about once a month, which helps your GADGET to operate in good condition for an extended period.

● Handling the LCD Screen

- Dark dots may appear on the LCD screen or they may stay on (in red, blue or green). This phenomenon is not an LCD malfunction. Even though our LCD screens are manufactured using high-precision technology, at a ratio of 0.01% or less, some may be subject to pixel loss or persisting dots on the screen. You can be reassured, however, that these dots will not be recorded in your data.
- In a cold district, or when the main unit is excessively cold, the LCD screen may become slightly darker than usual immediately after powering on. As the temperature rises, the normal brightness comes back.
- Under accute changes in temperature, condensation may occur on the LCD screen. In that case, only use the supplied wiper (only for ITCAM-9) or a soft sloth to wipe it off.

■ Precautions for Charging and Handling the Battery

● Charging

- Before starting, be sure to charge the battery (☛ Page xx).
- Keep charging until the CHARGE lamp goes off at an ambient temperature between 0 and 40 degrees centigrade. Outside this temperature range, charging may be more time-consuming.
- After charging is finished, remove the AC adaptor from the unit's DC IN jack or disconnect the battery from the GADGET unit.

● Using the Battery Efficiently

- Use the battery at an ambient temperature between 0 and 40 degrees centigrade. Under 0 degrees centigrade, the operating hours may be reduced. Under such conditions, you can extend the operating hours by warming the battery beforehand in your pocket.
- The battery keeps going down even in the standby state or when playing is paused. Turning off the power whenever possible helps extend the operating hours.
- The battery is not waterproof. Take care to keep it away from water.

● Storing Battery

- Leaving the battery installed in your GADGET slowly leads to battery drain even when the Power switch is set to [OFF]. Be sure to disconnect the battery from the main unit after charging or when you will not use the device for hours. This procedure enables you to prevent battery drain and reduction in battery life.
- Store the battery in a cool place with low humidity, at a fixed temperature if possible. An excessively low or high ambient temperature may reduce the battery life.
- When you are storing the battery at length, we recommend that you charge the battery at least once a year and put it back in storage after completely letting it discharge.

Checking Remaining Battery Capacity

When the display indicates that the remaining battery capacity is adequate but the power shuts off shortly, charge the battery to its full capacity.again. The remaining battery capacity should now be displayed correctly. Note, however, that correct indication may not be recovered after the unit has been used at a high temperature at length, after the unit has stood with the battery fully charged, or after the battery has been heavily used. Use the information above to plan your shooting hours.

Battery Life

- A battery has a life. The battery capacity slowly goes down as it is repeatedly used or used over time. When the operating time has become significantly short, the battery has reached the end of its life, requiring you to replace it with a new one.
- When disposing of a battery pack that you no longer need, do not burn or disassemble it. Cover the jack section with tape or the like and bring it to a recycle shop available to you.

Short-circuiting of the Battery Jack Section

Do not allow any metal items (such as a necklace or a hair pin) to make contact with the battery's jacks (plus and minus pins). Doing so may cause short-circuiting, which may result in an electric shock, liquid leakage, overheating, ignition, or blow-out.

■ Using GADGET Overseas

With GADGET, you can record and play back data anywhere around the world. Keep the following notes in mind when you do so.

● Power Supply

The AC adaptor shipped with the GADGET unit is designed to automatically switch to the appropriate supply voltage among those used around the world (100 V, 120 V, 220 V or 240 V) and to an appropriate frequency (50 Hz or 60 Hz). However, the shape of the power receptacle may differ , depending on your destination country, region, or district. When using your GADGET overseas, check the shape of the power receptacle of your destination and prepare a suitable plug. For purchase of an outlet adaptor plug, contact our service agent or your travel agency. The same charging procedure applies as that for domestic use.

The supplied AC adaptor is designed to support all supply voltages (100 V, 120 V, 220 V and 240 V) and frequencies (50 Hz and 60 Hz) used in the world.
Do not use a commercially available transformer; it may cause failure.

Types of Power Receptacles in Major Countries and Regions

Type	A	B	BF	C	S
Shape					
Outlet Adaptor Plug	Not needed				
Major Countries and Regions	Japan, North America	Europe, Asia, Africa		Europe	Oceania, China

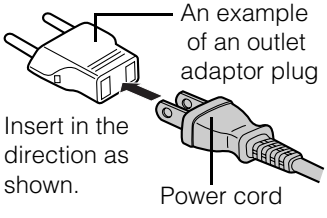

● Watching TV

Ground wave analog color TV broadcasting is performed in three systems: NTSC, PAL (PAL/PAL-M/PAL-N), and SECAM. These systems are related to devices such as TVs, VCRs, and video cameras. To play recorded videos, the color systems of the recording and playing devices must match. The GADGET unit can be connected to an NTSC or PAL-system TV set, you need to prepare either an NTSC- or PAL-system TV.

Major countries and regions using the NTSC system

· USA
· American Samoa
· Antigua and Babuda
· Yemen (some districts)
· British Bermuda
· Ecuador
· El Salvador
· Guyana
· Canada
· Cuba
· Guatemala
· Guam
· Grenada
· Costa Rica
· Columbia
· Jamaica
· Surinam
· Saint Christopher and Nevis
· Saint Vincent and the Grenadines
· Saint Lucia
· Taiwan
· Korea
· Chile
· Trinidad and Tobago
· Commonwealth of Dominica
· Dominican Republic
· Nicaragua
· Venezuela
· Haiti
· Panama
· Bahamas and Marshall
· Barbados
· Fiji
· Philippines
· Puerto Rico
· Vietnam (some districts)
· Belize
· Peru
· Bolivia
· Honduras
· Mariana Islands
· Federated States of Micronesia

· Myanmar
· Mexico

Major countries and regions using the PAL system
[PAL]
· UK
· Italy
· Australia
· Austria
· The Netherlands
· Kuwait
· Singapore
· Switzerland
· Sweden
· Spain
· Slovakia
· Thailand
· Czech
· China
· Denmark
· Germany
· New Zealand
· Norway
· Hungary
· Finland
· Belgium
· Hong Kong
· Poland
· Portugal
· Malaysia

[PAL-M]
· Brazil

[PAL-N]
· Argentina
· Uruguay
· Paraguay

Major countries and regions using the SECAM system
· Iraq
· Iran
· Ukraine
· Guyana
· France
· Bulgaria
· Monaco
· Russia

Notes

• Prepare a TV set that has video/audio jacks.

Troubleshooting

■Troubleshooting

While Recording

[Symptom]
Recording is disabled.
[Cause]
The hard disk, or “Memory Stick”/“Memory Stick Pro” does not have enough free space.
[Action]
Delete unnecessary data.

[Symptom]
The recordable time/photo count for movies or still images significantly differs from the value stated in this document.
[Cause]
The recordable time/photo count varies depending on the subject images. This is not a failure.
[Action]
-

[Cause]
The recordable time and photo count become less than the stated values when movies, still images, and audio/music files are used in a single “Memory Stick”/“Memory Stick Pro”.
[Action]
-

While Playing

[Symptom]
Movies and/or sounds are not played normally.
[Cause]
Data may have been destroyed because of static electricity or radio waves.
[Action]
Create backup copies of important data on a PC or other media.

[Symptom]
Sounds are not heard through earphones while displaying still images.
[Cause]
While displaying still images, it is normal that sounds are not heard.
[Action]
-

[Symptom]
The LCD screen displays movies in a small size.

[Cause]
The movies were recorded in QVGA (320 x 240) mode and played with [Display Screen Size] set to [Actual Size].
[Action]
From the menu, set [Display Screen Size] to [Full Screen].

[Symptom]
While recording fast motions, sometimes mosaic type noise occurs.
[Cause]
The phenomenon occurs from the inherent nature of MPEG4 movies. This is not an abnormality.
[Action]
Record in [Extra] mode.

[Symptom]
Files recorded on other devices or using third-party software cannot be played.
[Cause]
GADGET cannot always play files recorded on other devices or using third-party software. This is not an abnormality.
[Action]
-

[Symptom]
Files recorded on GADGET cannot be played on another device or images in the files cannot be displayed in the correct size.
[Cause]
Other devices cannot always play files recorded on GADGET or cannot always play images in such files in the correct size. This is not an abnormality.
[Action]
-

[Symptom]
Data recorded on a PC cannot be read on GADGET.
[Cause]
GADGET cannot read data that are incompatible with GADGET.
[Action]
-

[Symptom]
MPEG4 movies recorded on GADGET cannot be played on a PC.
[Cause]
A PC without movie-playing software installed cannot play movies recorded on GADGET.

[Action]
Install the supplied software.

[Symptom]
Black boarders appear at the top and bottom of the screen while playing movies on a PC.
[Cause]
If top and bottom black boarders were included in the original video/broadcasting screen, they are naturally included in movies, recorded or played on GADGET. When playing such movies on a PC, those black boarders appear as well. This is not an abnormality.
[Action]
-

[Symptom]
MP3 files cannot be played on GADGET.
[Cause]
1. An MP3 file cannot be played if its folder/file name includes characters other than Japanese or English characters. (When Japanese has been selected from the “Display Language” menu item)
2. An MP3 file cannot be played if its encoding format is not compatible.
3. An MP3 folder cannot be played if it has more than 100 folders and files in all.
4. An MP3 folder cannot be played if it has a hierarchical structure with more than three or more sub-folder layers.

[Action]
1. Use Japanese or English characters for the name.
2. An incompatible file cannot be played by design.
3. Delete unnecessary folders and files to reduce the total number to 100 or less.
4. Restructure the sub-folders under the MP3 folder into a hierarchy with three layers or fewer.

[Symptom]
The title/artist name does not appear for the MP3 file being played.
[Cause]
Although GADGET supports the MP3 ID tags, they may not always be displayed in the following cases:
- The folder/file name includes characters other than Japanese or English characters. (When Japanese has been selected from the [Display Language] menu item)
- The ID tag includes characters other than Japanese or English characters.
  (When Japanese has been selected from the “Display Language” menu item)

[Action]
-

While Operating "Memory Stick"

[Symptom]
Data cannot be written, deleted, or formatted to/from/on the "Memory Stick"/"Memory Stick Pro".
[Cause]
The Delete-Protection switch has been locked.
[Action]
Unlock the Delete-Protection switch.

[Symptom]
"Memory Stick"/"Memory Stick Pro" formatted on a device other than GADGET is not useable.
[Cause]
"Memory Stick"/"Memory Stick Pro" formatted on a device other than GADGET cannot be used.
[Action]
Reformat it on GADGET.

[Symptom]
"Memory Stick"/"Memory Stick Pro" formatted on GADGET is not useable on other devices.
[Cause]
-
[Action]
Format it on the device it will be used with.

[Symptom]
"Memory Stick"/"Memory Stick Pro" cannot be read on GADGET.
[Cause]
A certain folder has been deleted from the "Memory Stick"/"Memory Stick Pro" on the PC that is running it.
[Action]
Do not delete any folder from "Memory Stick"/"Memory Stick Pro".

[Symptom]
"Memory Stick"/"Memory Stick Pro" formatted in the NTFS format cannot be detected on GADGET.
[Cause]
GADGET does not support NTFS-formatted "Memory Stick"/"Memory Stick Pro".
[Action]
Use GADGET to format any "Memory Stick"/"Memory Stick Pro" to be used on GADGET.

[Symptom]
GADGET-formatted "Memory Stick"/"Memory Stick Pro" is not useable.
[Cause]
GADGET or the "Memory Stick"/"Memory Stick Pro" may be faulty.

[Action]
Contact our service center (☛ Page xx).

Connecting to a TV Set or VCR

[Symptom]
No images or sounds are generated after connecting to a TV set.
[Cause]
Connection may be faulty.
[Action]
Re-connect using the supplied cable.

[Cause]
The Power switch may not be set to [PLAY], disabling image and sound playback.
[Action]
Set the Power switch to [PLAY].

[Symptom]
Connecting to external equipment using the cradle disturbs the display.
[Cause]
Connecting GADGET to both video/audio input and output jacks of a single external device may disturb the display.
[Action]
Connect GADGET to either the video/audio input or output jack, not to both.

[Symptom]
Part of the display characters do not appear.
[Cause]
Part of the display characters may be suppressed depending on the TV type. This is not a failure.
[Action]
-

[Symptom]
Panoramic images (16.9) cannot be recorded normally.
[Cause]
GADGET does not support panoramic images.
[Action]
-

[Symptom]
Automatic recording fails to record the top portion.
[Cause]
GADGET's automatic recording function starts after detecting video signal input. Thus , it may not record the portion immediately after the start of automatic recording.

[Action]
Give a one-minute allowance or so for timer setting on the external equipment.

Connecting to a PC

[Symptom]
After connecting the USB cable, a green [?] mark appears for [USB High-Volume Storage Device] in [Device Manager] on Windows.
[Cause]
Depending on the OS, [?] may appear if the cable was connected without installing the supplied USB driver.
[Action]
Disconnect the USB cable from GADGET and install the USB driver.

[Symptom]
While using Windows Me, [Warning on device removal] appeared after the USB cable was disconnected.
[Cause]
This warning appears if the cable was connected without installing the supplied USB driver.
[Action]
Install the USB driver.

[Symptom]
The PC that has been recovered from suspension does not detect GADGET.
[Cause]
-
[Action]
Restart the PC.

Other Trouble

[Symptom]
GADGET cannot be powered on.
[Cause]
GADGET cannot be powered on unless the battery and/or AC adaptor is/are connected correctly.
[Action]
Check the connections.

[Cause]
The battery is run down.
[Action]
Charge the battery, or replace the battery with a fully charged one.

[Symptom]
The power is suspended immediately after it is turned on.
[Cause]
The remaining battery capacity is not sufficient.
[Action]
Charge the battery, or replace the battery with a fully charged one.

[Symptom]
Recording/playing failed, followed by screen freeze.
[Cause]
-
[Action]
Press the reset switch inside the battery case. After pressing the reset switch, check any desired settings.

[Symptom]
Red, blue, green, or white dots appeared on the screen.
[Cause]
At a ratio of less than 0.01%, LCD screens are subject to pixel loss or dots that are permanently lit, which is not a failure.
[Action]
-

[Symptom]
GADGET does not detect DPOF information that has been set on another device.
[Cause]
GADGET may not detect DPOF information that has been set on another device. This is not a failure.
[Action]
Re-enter the information on GADGET.

[Symptom]
DPOF setting/resetting is time-consuming.
[Cause]
Setting/resetting is naturally time-consuming if there are numerous files to be set or reset. This is not an abnormality.
[Action]
-

[Symptom]
DPOF information that has been set on another device is deleted.
[Cause]
Deleting a file on GADGET may delete DPOF information set on an another device. This is not a failure.
[Action]
-

Additional Information

■ Major Specifications

● ITCAM-7/9

System	
Recording method	Hard disk drive/Memory Stick recording system (with MPEG4 video compression and ADPCM audio compression)
Video signal	NTSC/PAL color, CCIR-compliant method
Audio recording method	ADPCM method, 44.1 kHz/16 bits (stereo)
Recording media	Internal 1-inch hard disk drive: 1.5 GB Memory Stick: 16 - 128 MB Memory Stick Pro: 256 MB - 32 GB
Recording/playing time (for the internal hard disk)	
	20 - 120 minutes: VGA, Extra (VBR) 60 minutes: Super Fine (CBR, 3.0 Mbps) 150 minutes: QVGA, Super Fine (CBR, 1.2 Mbps)
Video file format	AVI format, MPEG4 video compression and ADPCM audio compression
Bit rate	Video: 0.5 Mbps (QVGA)- 2.5 Mbps (VGA), supporting CBR and VBR Audio: 352.8 Kbps
Image pickup device	1/6 type CCD, about 350,000 pixels (total), progressive scanning
Zoom lens	Optical magnification: 10
Focal length	f = 3.15 - 31.5 mm, F = 1.8 - 2.0
Filter diameter	30 mm
Minimum object intensity	0.5 lux
LCD screen	Model 2 semi-transmissive color LCD, about 211,000 pixels

General Specifications

Input/output jacks	Input/output jacks for USB 2.0 (5-pin, mini-B type) (shared for S-video, composite video, and audio) Earphone jack
Input/output jacks	
USB jack	USB 2.0-compliant
Special connector for connecting the cradle (for video, audio, power supply, etc.)	
Headphone jack	3.5 ∅, 3-pin mini jack
Allowable operating temperature	0° C - 40° C
Allowable relative temperature	10% - 80%
Supply voltage	7.2 V (when operating on a battery) 8.4 V (when operating via the AC adaptor)
Power consumption	About 5.0 W
External dimensions	33×103×63 mm (width x height x depth)
Mass	About 220 g (including the battery)

● Cradle Specifications (only for ITCAM-9)

Input/output jacks

S-video input jack	Mini Din 4-pin Y input: 1 Vp-p, 75Ω unbalanced, negative sync C input: 0.286 mV, 75Ω unbalanced

S-video output jack	Mini Din 4-pin
	Y output: 1 Vp-p, 75Ω unbalanced, negative sync
	C output: 0.286 mV, 75Ω unbalanced
AV input	3.5 ∅, 4-pin mini jack
	Video input: 1 Vp-p, 75Ω unbalanced, negative sync
	Audio input: 327 mV, 10 kΩ, stereo
AV output	3.5 ∅, 4-pin mini jack
	Video output: 1 Vp-p, 75Ω unbalanced, negative sync
	Audio output: 327 mV, 2.2 kΩ, stereo
Special connector for connecting ITCAM-7/9 (for video, audio, power supply, etc.)	
DC input	DC 8.4 V
Dimensions (width x height x depth)	127 mm x 80 mm x 68 mm
Weight	About 170 g

● AC Adaptor Specifications

Input voltage	AC 100 - 240 V, 50/60 Hz
Output voltage	DC 8.4 V, 1.6 A
Allowable operating temperature	0° C - 40° C
Dimensions (width x height x depth)	60 mm x 44 mm x 26 mm
Weight	110 g

■ Guarantee and Services

1. Guarantee (attached as a separate document)
   When receiving the guarantee from your dealer, be sure to check the entries for "Dealer Name and Guarantee Period," and keep the gurantee in a safe place.
2. Guarantee period: For one year after the date of purchase
   If the unit is used for business or special purposes, it is subject to pay repair services even during the guarantee period.
3. Requesting repair services during the guarantee period
   First, refer to the "Troubleshooting" section in this manual and check the device again. If the problem still persists, then present the guarantee certificate to your dealer and make a request for repair. For this product, repair services are only supported for items that can be brought in.
4. Requesting repair services after the guarantee period has expired
   First, contact your dealer. If it is possible to maintain the product's functionality by repairing it, we provide pay repair services upon request.
5. Minimum retaining period for replacement performance components
   The repair performance components (parts needed for maintaining the defined functionality) for this digital video camera will be retained in stock for eight years after the production is discontinued.
6. Feel free to make inquiries to your dealer about our after-the-sale services, including repair services during the guarantee period. You can also contact the following:

Information we need:

- Your name, address, and phone number
- The product name (ITCAM-7/9), Item No., and date of purchase
- Description of the trouble or abnormality

長期間ご使用中のデジタルビデオカメラは、点検を!!

愛情点検

●電源コードやプラグが異常に熱い。
●スイッチを入れても動作しない。
●映像が乱れたり、色がきれいに出ない。
●画面が途中で消えたり、一部が欠けて映る。
●その他の異常や故障がある。

● ご使用中止 ●
電源を切り、プラグをはずして
必ずサービスセンターにご相談ください。

List of Service Agents

The agents listed below can also provide repair services. Please contact our service agent nearest you.
* Request: Please be sure to contact our service center for advisory or handling-related information concerning this product.
* Note that the information on service agents, including their phone numbers and addresses, are subject to change.

District	Shop Name	Prefecture	Address	Phone Number	Fax Number
Hokkaido	››››	Hokkaido	››››, Sapporo-shi	011-xxx-xxx	011-xxx-xxx
	››››	Hokkaido	››››, Sapporo-shi	011-xxx-xxx	011-xxx-xxx
	››››	Hokkaido	››››, Sapporo-shi	011-xxx-xxx	011-xxx-xxx
	››››	Hokkaido	››››, Sapporo-shi	011-xxx-xxx	011-xxx-xxx
Tohoku	››››	Aomori	››››, Hachinohe-shi	0178-xxx-xxx	0178-xxx-xxx
	››››	Aomori	››››, Hachinohe-shi	0178-xxx-xxx	0178-xxx-xxx
	››››	Aomori	››››, Hachinohe-shi	0178-xxx-xxx	0178-xxx-xxx
	››››	Aomori	››››, Hachinohe-shi	0178-xxx-xxx	0178-xxx-xxx