Calibration Laboratory of
Schmid & Partner
Engineering AG
Zeughausstrasse 43, 8004 Zurich, Switzerland

S Schweizerischer Kalibrierdienst
C Service suisse d'étalonnage
Servizio svizzero di taratura
S Swiss Calibration Service

Accredited by the Swiss Accreditation Service (SAS)
The Swiss Accreditation Service is one of the signatories to the EA Multilateral Agreement for the recognition of calibration certificates

Accreditation No.: SCS 108

Client PC Test

Certificate No: D1765V2-1008_May09

CALIBRATION CERTIFICATE

Object	D1765V2 - SN: 1008
Calibration procedure(s)	QA CAL-05.v7 Calibration procedure for dipole validation kits
Calibration date:	May 19, 2009
Condition of the calibrated item	In Tolerance

OK
SZ
5/26/09

This calibration certificate documents the traceability to national standards, which realize the physical units of measurements (SI).
The measurements and the uncertainties with confidence probability are given on the following pages and are part of the certificate.

All calibrations have been conducted in the closed laboratory facility: environment temperature (22 ± 3)°C and humidity < 70%.

Calibration Equipment used (M&TE critical for calibration)

Primary Standards	ID #	Cal Date (Calibrated by, Certificate No.)	Scheduled Calibration
Power meter EPM-442A	GB37480704	08-Oct-08 (No. 217-00898)	Oct-09
Power sensor HP 8481A	US37292783	08-Oct-08 (No. 217-00898)	Oct-09
Reference 20 dB Attenuator	SN: 5086 (20g)	31-Mar-09 (No. 217-01025)	Mar-10
Type-N mismatch combination	SN: 5047.2 / 06327	31-Mar-09 (No. 217-01029)	Mar-10
Reference Probe ES3DV2	SN: 3025	30-Apr-09 (No. ES3-3025_Apr09)	Apr-10
DAE4	SN: 601	07-Mar-09 (No. DAE4-601_Mar09)	Mar-10

Secondary Standards	ID #	Check Date (in house)	Scheduled Check
Power sensor HP 8481A	MY41092317	18-Oct-02 (in house check Oct-07)	In house check: Oct-09
RF generator R&S SMT-06	100005	4-Aug-99 (in house check Oct-07)	In house check: Oct-09
Network Analyzer HP 8753E	US37390585 S4206	18-Oct-01 (in house check Oct-08)	In house check: Oct-09

	Name	Function	Signature
Calibrated by:	Mike Meili	Laboratory Technician	
Approved by:	Katja Pokovic	Technical Manager	

Issued: May 20, 2009

This calibration certificate shall not be reproduced except in full without written approval of the laboratory.

Glossary:

TSL	tissue simulating liquid
ConvF	sensitivity in TSL / NORM x,y,z
N/A	not applicable or not measured

Calibration is Performed According to the Following Standards:

a) IEEE Std 1528-2003, "IEEE Recommended Practice for Determining the Peak Spatial-Averaged Specific Absorption Rate (SAR) in the Human Head from Wireless Communications Devices: Measurement Techniques", December 2003
b) IEC 62209-1, "Procedure to measure the Specific Absorption Rate (SAR) for hand-held devices used in close proximity to the ear (frequency range of 300 MHz to 3 GHz)", February 2005
c) Federal Communications Commission Office of Engineering & Technology (FCC OET), "Evaluating Compliance with FCC Guidelines for Human Exposure to Radiofrequency Electromagnetic Fields; Additional Information for Evaluating Compliance of Mobile and Portable Devices with FCC Limits for Human Exposure to Radiofrequency Emissions", Supplement C (Edition 01-01) to Bulletin 65

Additional Documentation:

d) DASY4/5 System Handbook

Methods Applied and Interpretation of Parameters:

- *Measurement Conditions:* Further details are available from the Validation Report at the end of the certificate. All figures stated in the certificate are valid at the frequency indicated.
- *Antenna Parameters with TSL:* The dipole is mounted with the spacer to position its feed point exactly below the center marking of the flat phantom section, with the arms oriented parallel to the body axis.
- *Feed Point Impedance and Return Loss:* These parameters are measured with the dipole positioned under the liquid filled phantom. The impedance stated is transformed from the measurement at the SMA connector to the feed point. The Return Loss ensures low reflected power. No uncertainty required.
- *Electrical Delay:* One-way delay between the SMA connector and the antenna feed point. No uncertainty required.
- *SAR measured:* SAR measured at the stated antenna input power.
- *SAR normalized:* SAR as measured, normalized to an input power of 1 W at the antenna connector.
- *SAR for nominal TSL parameters:* The measured TSL parameters are used to calculate the nominal SAR result.

Measurement Conditions

DASY system configuration, as far as not given on page 1.

DASY Version	DASY5	V5.0
Extrapolation	Advanced Extrapolation	
Phantom	Modular Flat Phantom V5.0	
Distance Dipole Center - TSL	10 mm	with Spacer
Zoom Scan Resolution	dx, dy, dz = 5 mm	
Frequency	1765 MHz ± 1 MHz	

Head TSL parameters

The following parameters and calculations were applied.

	Temperature	**Permittivity**	**Conductivity**
Nominal Head TSL parameters	22.0 °C	40.1	1.38 mho/m
Measured Head TSL parameters	(22.0 ± 0.2) °C	41.4 ± 6 %	1.36 mho/m ± 6 %
Head TSL temperature during test	(21.4 ± 0.2) °C	----	----

SAR result with Head TSL

SAR averaged over 1 cm^3 (1 g) of Head TSL	condition	
SAR measured	250 mW input power	9.38 mW /g
SAR normalized	normalized to 1W	37.5 mW /g
SAR for nominal Head TSL parameters [1]	normalized to 1W	**38.2 mW/g ± 17.0 % (k=2)**

SAR averaged over 10 cm^3 (10 g) of Head TSL	condition	
SAR measured	250 mW input power	5.02 mW /g
SAR normalized	normalized to 1W	20.1 mW /g
SAR for nominal Head TSL parameters [1]	normalized to 1W	**20.3 W/g ± 16.5 % (k=2)**

[1] Correction to nominal TSL parameters according to d), chapter "SAR Sensitivities"

Body TSL parameters

The following parameters and calculations were applied.

	Temperature	Permittivity	Conductivity
Nominal Body TSL parameters	22.0 °C	53.4	1.50 mho/m
Measured Body TSL parameters	(22.0 ± 0.2) °C	53.8 ± 6 %	1.47 mho/m ± 6 %
Body TSL temperature during test	(21.0 ± 0.2) °C	----	----

SAR result with Body TSL

SAR averaged over 1 cm^3 (1 g) of Body TSL	condition	
SAR measured	250 mW input power	9.19 mW /g
SAR normalized	normalized to 1W	36.6 mW /g
SAR for nominal Body TSL parameters [2]	normalized to 1W	**37.3 mW / g ± 17.0 % (k=2)**

SAR averaged over 10 cm^3 (10 g) of Body TSL	condition	
SAR measured	250 mW input power	4.97 mW /g
SAR normalized	normalized to 1W	19.9 mW /g
SAR for nominal Body TSL parameters [2]	normalized to 1W	**20.0 mW / g ± 16.5 % (k=2)**

[2] Correction to nominal TSL parameters according to d), chapter "SAR Sensitivities"

Appendix

Antenna Parameters with Head TSL

Impedance, transformed to feed point	48.4 Ω - 2.7 jΩ
Return Loss	- 29.9 dB

Antenna Parameters with Body TSL

Impedance, transformed to feed point	44.8 Ω - 2.6 jΩ
Return Loss	- 24.2 dB

General Antenna Parameters and Design

Electrical Delay (one direction)	1.210 ns

After long term use with 100W radiated power, only a slight warming of the dipole near the feedpoint can be measured.

The dipole is made of standard semirigid coaxial cable. The center conductor of the feeding line is directly connected to the second arm of the dipole. The antenna is therefore short-circuited for DC-signals.
No excessive force must be applied to the dipole arms, because they might bend or the soldered connections near the feedpoint may be damaged.

Additional EUT Data

Manufactured by	SPEAG
Manufactured on	October 6, 2005

DASY5 Validation Report for Head TSL

Date/Time: 19.05.2009 13:14:46

Test Laboratory: SPEAG, Zurich, Switzerland

DUT: Dipole 1765 MHz; Type: D1765V2; Serial: D1765V2 - SN1008

Communication System: CW-1750; Frequency: 1765 MHz; Duty Cycle: 1:1
Medium: HSL U11 BB
Medium parameters used: f = 1765 MHz; σ = 1.36 mho/m; ε_r = 41.5; ρ = 1000 kg/m^3
Phantom section: Flat Section
Measurement Standard: DASY5 (IEEE/IEC)

DASY5 Configuration:

- Probe: ES3DV2 - SN3025; ConvF(5.04, 5.04, 5.04); Calibrated: 30.04.2009
- Sensor-Surface: 3mm (Mechanical Surface Detection)
- Electronics: DAE4 Sn601; Calibrated: 07.03.2009
- Phantom: Flat Phantom 5.0 (front); Type: QD000P50AA; Serial: 1001
- Measurement SW: DASY5, V5.0 Build 120; SEMCAD X Version 13.4 Build 45

Pin = 250 mW; d = 10 mm, f = 1765 MHz/Zoom Scan (7x7x7)/Cube 0:

Measurement grid: dx=5mm, dy=5mm, dz=5mm
Reference Value = 95.1 V/m; Power Drift = 0.048 dB
Peak SAR (extrapolated) = 16.7 W/kg
SAR(1 g) = 9.38 mW/g; SAR(10 g) = 5.02 mW/g
Maximum value of SAR (measured) = 11.5 mW/g

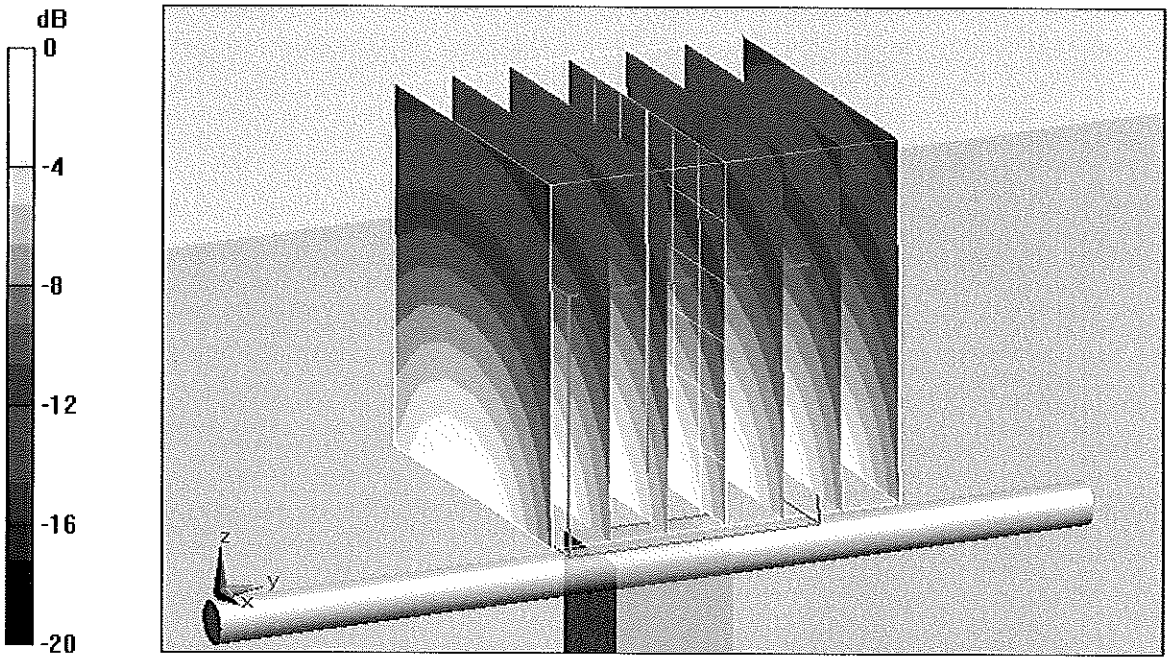

0 dB = 11.5mW/g

Impedance Measurement Plot for Head TSL

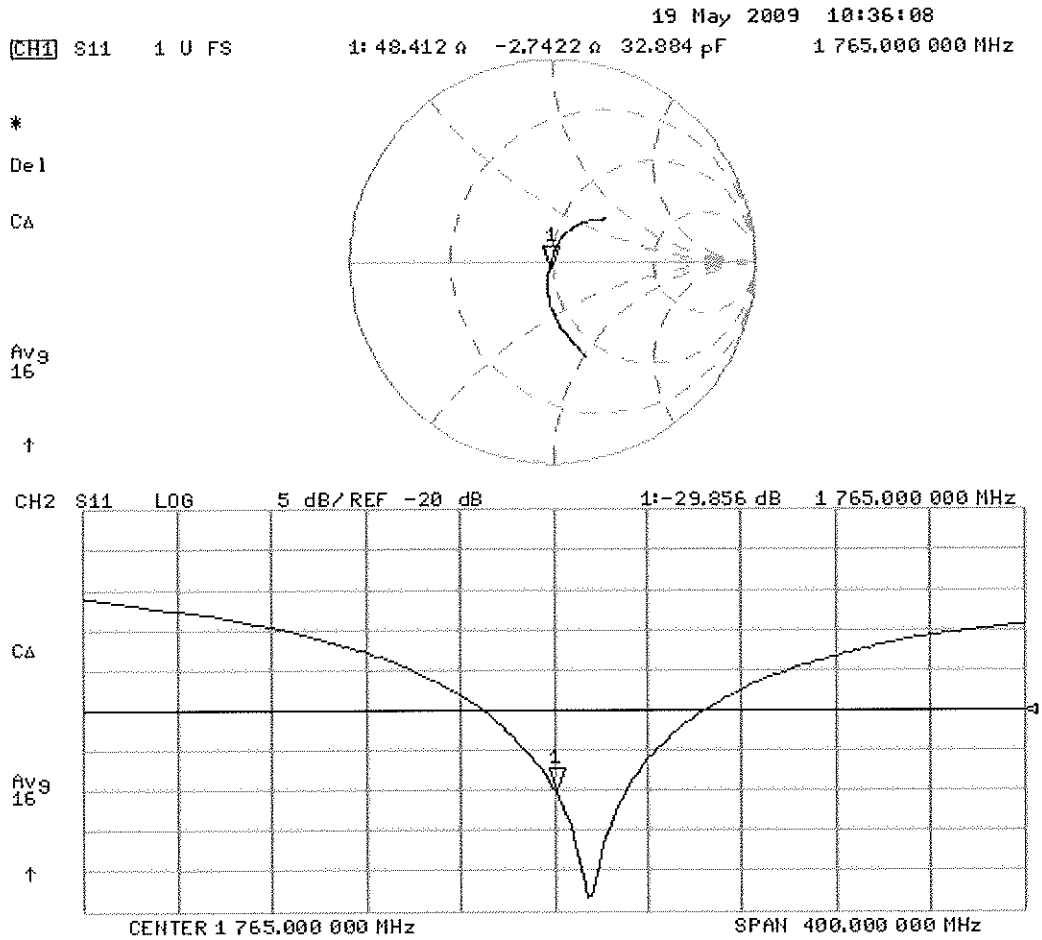

DASY5 Validation Report for Body TSL

Date/Time: 19.05.2009 15:46:05

Test Laboratory: SPEAG, Zurich, Switzerland

DUT: Dipole 1765 MHz; Type: D1765V2; Serial: D1765V2 - SN1008

Communication System: CW-1750; Frequency: 1765 MHz; Duty Cycle: 1:1
Medium: MSL U10 BB
Medium parameters used: f = 1765 MHz; σ = 1.47 mho/m; ε_r = 54; ρ = 1000 kg/m^3
Phantom section: Flat Section
Measurement Standard: DASY5 (IEEE/IEC)

DASY5 Configuration:

- Probe: ES3DV2 - SN3025; ConvF(4.71, 4.71, 4.71); Calibrated: 30.04.2009
- Sensor-Surface: 3mm (Mechanical Surface Detection)
- Electronics: DAE4 Sn601; Calibrated: 07.03.2009
- Phantom: Flat Phantom 5.0 (back); Type: QD000P50AA; Serial: 1002
- Measurement SW: DASY5, V5.0 Build 120; SEMCAD X Version 13.4 Build 45

Pin = 250 mW; d = 10 mm, f = 1765 MHz/Zoom Scan (7x7x7)/Cube 0:

Measurement grid: dx=5mm, dy=5mm, dz=5mm
Reference Value = 92.4 V/m; Power Drift = 0.00676 dB
Peak SAR (extrapolated) = 15.7 W/kg
SAR(1 g) = 9.19 mW/g; SAR(10 g) = 4.97 mW/g
Maximum value of SAR (measured) = 11.5 mW/g

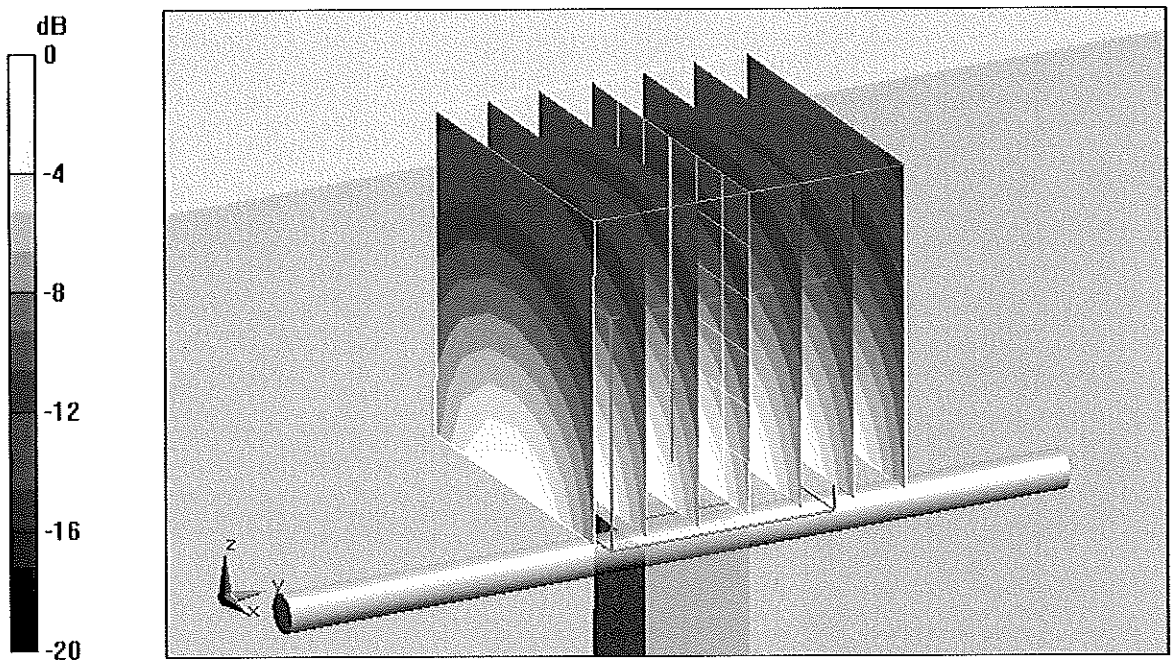

0 dB = 11.5mW/g

Impedance Measurement Plot for Body TSL

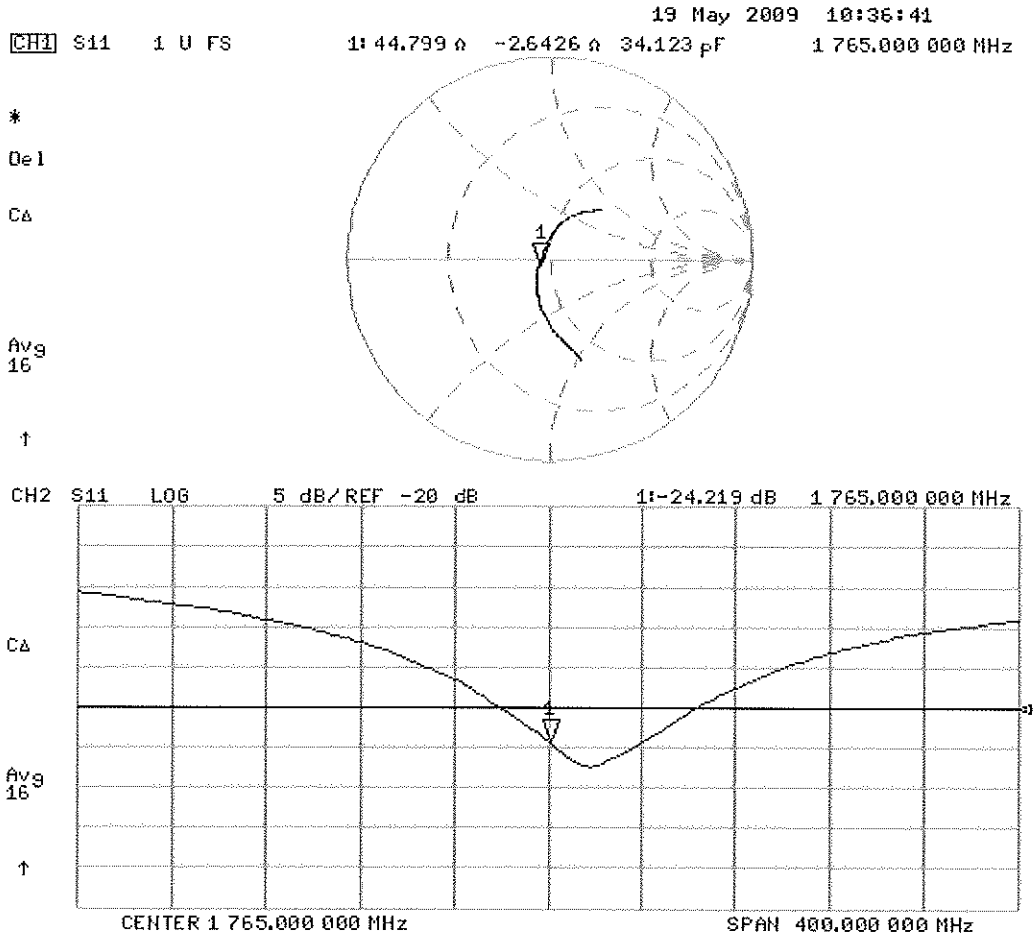

Calibration Laboratory of
Schmid & Partner
Engineering AG
Zeughausstrasse 43, 8004 Zurich, Switzerland

S Schweizerischer Kalibrierdienst
C Service suisse d'étalonnage
Servizio svizzero di taratura
S Swiss Calibration Service

Accredited by the Swiss Accreditation Service (SAS)
The Swiss Accreditation Service is one of the signatories to the EA Multilateral Agreement for the recognition of calibration certificates

Accreditation No.: SCS 108

Client PC Test

Certificate No: D1900V2-5d080-Aug09

CALIBRATION CERTIFICATE

Object	D1900V2 - SN: 5d080
Calibration procedure(s)	QA CAL-05.v7 Calibration procedure for dipole validation kits
Calibration date:	August 18, 2009
Condition of the calibrated item	In Tolerance

OK ✓
8/31/09

This calibration certificate documents the traceability to national standards, which realize the physical units of measurements (SI).
The measurements and the uncertainties with confidence probability are given on the following pages and are part of the certificate.

All calibrations have been conducted in the closed laboratory facility: environment temperature (22 ± 3)°C and humidity < 70%.

Calibration Equipment used (M&TE critical for calibration)

Primary Standards	ID #	Cal Date (Calibrated by, Certificate No.)	Scheduled Calibration
Power meter EPM-442A	GB37480704	08-Oct-08 (No. 217-00898)	Oct-09
Power sensor HP 8481A	US37292783	08-Oct-08 (No. 217-00898)	Oct-09
Reference 20 dB Attenuator	SN: 5086 (20g)	31-Mar-09 (No. 217-01025)	Mar-10
Type-N mismatch combination	SN: 5047.2 / 06327	31-Mar-09 (No. 217-01029)	Mar-10
Reference Probe ES3DV3	SN: 3205	26-Jun-09 (No. ES3-3205_Jun09)	Jun-10
DAE4	SN: 601	07-Mar-09 (No. DAE4-601_Mar09)	Mar-10

Secondary Standards	ID #	Check Date (in house)	Scheduled Check
Power sensor HP 8481A	MY41092317	18-Oct-02 (in house check Oct-07)	In house check: Oct-09
RF generator R&S SMT-06	100005	4-Aug-99 (in house check Oct-07)	In house check: Oct-09
Network Analyzer HP 8753E	US37390585 S4206	18-Oct-01 (in house check Oct-08)	In house check: Oct-09

	Name	Function	Signature
Calibrated by:	Claudio Leubler	Laboratory Technician	
Approved by:	Katja Pokovic	Technical Manager	

Issued: August 19, 2009

This calibration certificate shall not be reproduced except in full without written approval of the laboratory.

Glossary:

TSL	tissue simulating liquid
ConvF	sensitivity in TSL / NORM x,y,z
N/A	not applicable or not measured

Calibration is Performed According to the Following Standards:

a) IEEE Std 1528-2003, "IEEE Recommended Practice for Determining the Peak Spatial-Averaged Specific Absorption Rate (SAR) in the Human Head from Wireless Communications Devices: Measurement Techniques", December 2003
b) CENELEC EN 50361, "Basic standard for the measurement of Specific Absorption Rate related to human exposure to electromagnetic fields from mobile phones (300 MHz - 3 GHz), July 2001
c) Federal Communications Commission Office of Engineering & Technology (FCC OET), "Evaluating Compliance with FCC Guidelines for Human Exposure to Radiofrequency Electromagnetic Fields; Additional Information for Evaluating Compliance of Mobile and Portable Devices with FCC Limits for Human Exposure to Radiofrequency Emissions", Supplement C (Edition 01-01) to Bulletin 65

Additional Documentation:

d) DASY4/5 System Handbook

Methods Applied and Interpretation of Parameters:

- *Measurement Conditions:* Further details are available from the Validation Report at the end of the certificate. All figures stated in the certificate are valid at the frequency indicated.
- *Antenna Parameters with TSL:* The dipole is mounted with the spacer to position its feed point exactly below the center marking of the flat phantom section, with the arms oriented parallel to the body axis.
- *Feed Point Impedance and Return Loss:* These parameters are measured with the dipole positioned under the liquid filled phantom. The impedance stated is transformed from the measurement at the SMA connector to the feed point. The Return Loss ensures low reflected power. No uncertainty required.
- *Electrical Delay:* One-way delay between the SMA connector and the antenna feed point. No uncertainty required.
- *SAR measured:* SAR measured at the stated antenna input power.
- *SAR normalized:* SAR as measured, normalized to an input power of 1 W at the antenna connector.
- SAR for nominal TSL parameters: The measured TSL parameters are used to calculate the nominal SAR result.

Measurement Conditions

DASY system configuration, as far as not given on page 1.

DASY Version	DASY5	V5.0
Extrapolation	Advanced Extrapolation	
Phantom	Modular Flat Phantom V5.0	
Distance Dipole Center - TSL	10 mm	with Spacer
Zoom Scan Resolution	dx, dy, dz = 5 mm	
Frequency	1900 MHz ± 1 MHz	

Head TSL parameters

The following parameters and calculations were applied.

	Temperature	**Permittivity**	**Conductivity**
Nominal Head TSL parameters	22.0 °C	40.0	1.40 mho/m
Measured Head TSL parameters	(22.0 ± 0.2) °C	40.8 ± 6 %	1.45 mho/m ± 6 %
Head TSL temperature during test	(22.0 ± 0.2) °C	----	----

.

SAR result with Head TSL

SAR averaged over 1 cm^3 (1 g) of Head TSL	condition	
SAR measured	250 mW input power	10.2 mW / g
SAR normalized	normalized to 1W	40.8 mW / g
SAR for nominal Head TSL parameters [1]	normalized to 1W	**40.1 mW / g ± 17.0 % (k=2)**

SAR averaged over 10 cm^3 (10 g) of Head TSL	Condition	
SAR measured	250 mW input power	5.30 mW / g
SAR normalized	normalized to 1W	21.2 mW / g
SAR for nominal Head TSL parameters [1]	normalized to 1W	**21.0 mW / g ± 16.5 % (k=2)**

[1] Correction to nominal TSL parameters according to d), chapter "SAR Sensitivities"

Body TSL parameters

The following parameters and calculations were applied.

	Temperature	Permittivity	Conductivity
Nominal Body TSL parameters	22.0 °C	53.3	1.52 mho/m
Measured Body TSL parameters	(22.0 ± 0.2) °C	53.9 ± 6 %	1.57 mho/m ± 6 %
Body TSL temperature during test	(22.0 ± 0.2) °C	----	----

SAR result with Body TSL

SAR averaged over 1 cm^3 (1 g) of Body TSL	Condition	
SAR measured	250 mW input power	10.3 mW / g
SAR normalized	normalized to 1W	41.2 mW / g
SAR for nominal Body TSL parameters [2]	normalized to 1W	**40.5 mW / g ± 17.0 % (k=2)**

SAR averaged over 10 cm^3 (10 g) of Body TSL	condition	
SAR measured	250 mW input power	5.41 mW / g
SAR normalized	normalized to 1W	21.6 mW / g
SAR for nominal Body TSL parameters [2]	normalized to 1W	**21.5 mW / g ± 16.5 % (k=2)**

[2] Correction to nominal TSL parameters according to d), chapter "SAR Sensitivities"

Appendix

Antenna Parameters with Head TSL

Impedance, transformed to feed point	50.0 Ω + 6.1 jΩ
Return Loss	- 24.3 dB

Antenna Parameters with Body TSL

Impedance, transformed to feed point	47.1 Ω + 5.7 jΩ
Return Loss	- 23.6 dB

General Antenna Parameters and Design

Electrical Delay (one direction)	1.193 ns

After long term use with 100W radiated power, only a slight warming of the dipole near the feedpoint can be measured.

The dipole is made of standard semirigid coaxial cable. The center conductor of the feeding line is directly connected to the second arm of the dipole. The antenna is therefore short-circuited for DC-signals.
No excessive force must be applied to the dipole arms, because they might bend or the soldered connections near the feedpoint may be damaged.

Additional EUT Data

Manufactured by	SPEAG
Manufactured on	June 28, 2006

DASY5 Validation Report for Head TSL

Date/Time: 05.08.2009 14:25:51

Test Laboratory: SPEAG, Zurich, Switzerland

DUT: Dipole 1900 MHz; Type: D1900V2; Serial: D1900V2 - SN:5d080

Communication System: CW; Frequency: 1900 MHz; Duty Cycle: 1:1
Medium: HSL U11 BB
Medium parameters used: f = 1900 MHz; σ = 1.45 mho/m; ε_r = 40.8; ρ = 1000 kg/m^3
Phantom section: Flat Section
Measurement Standard: DASY5 (IEEE/IEC)

DASY5 Configuration:

- Probe: ES3DV3 - SN3205; ConvF(5.09, 5.09, 5.09); Calibrated: 26.06.2009
- Sensor-Surface: 3mm (Mechanical Surface Detection)
- Electronics: DAE4 Sn601; Calibrated: 07.03.2009
- Phantom: Flat Phantom 5.0 (front); Type: QD000P50AA; Serial: 1001
- Measurement SW: DASY5, V5.0 Build 120; SEMCAD X Version 13.4 Build 45

Pin = 250 mW; dip = 10 mm, scan at 3.0 mm/Zoom Scan (dist=3.0 mm, probe 0deg) (7x7x7)/Cube 0: Measurement grid: dx=5mm, dy=5mm, dz=5mm
Reference Value = 94.9 V/m; Power Drift = 0.040 dB
Peak SAR (extrapolated) = 18.7 W/kg
SAR(1 g) = 10.2 mW/g; SAR(10 g) = 5.3 mW/g
Maximum value of SAR (measured) = 12.6 mW/g

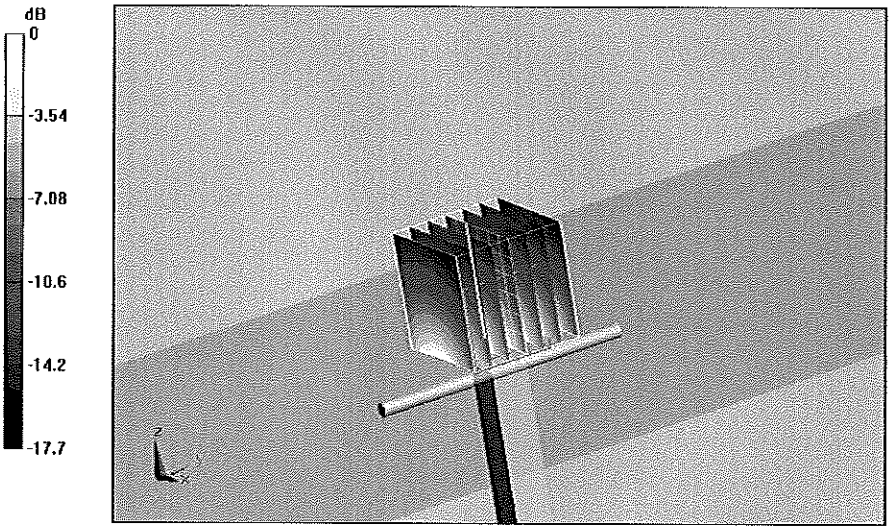

0 dB = 12.6mW/g

Impedance Measurement Plot for Head TSL

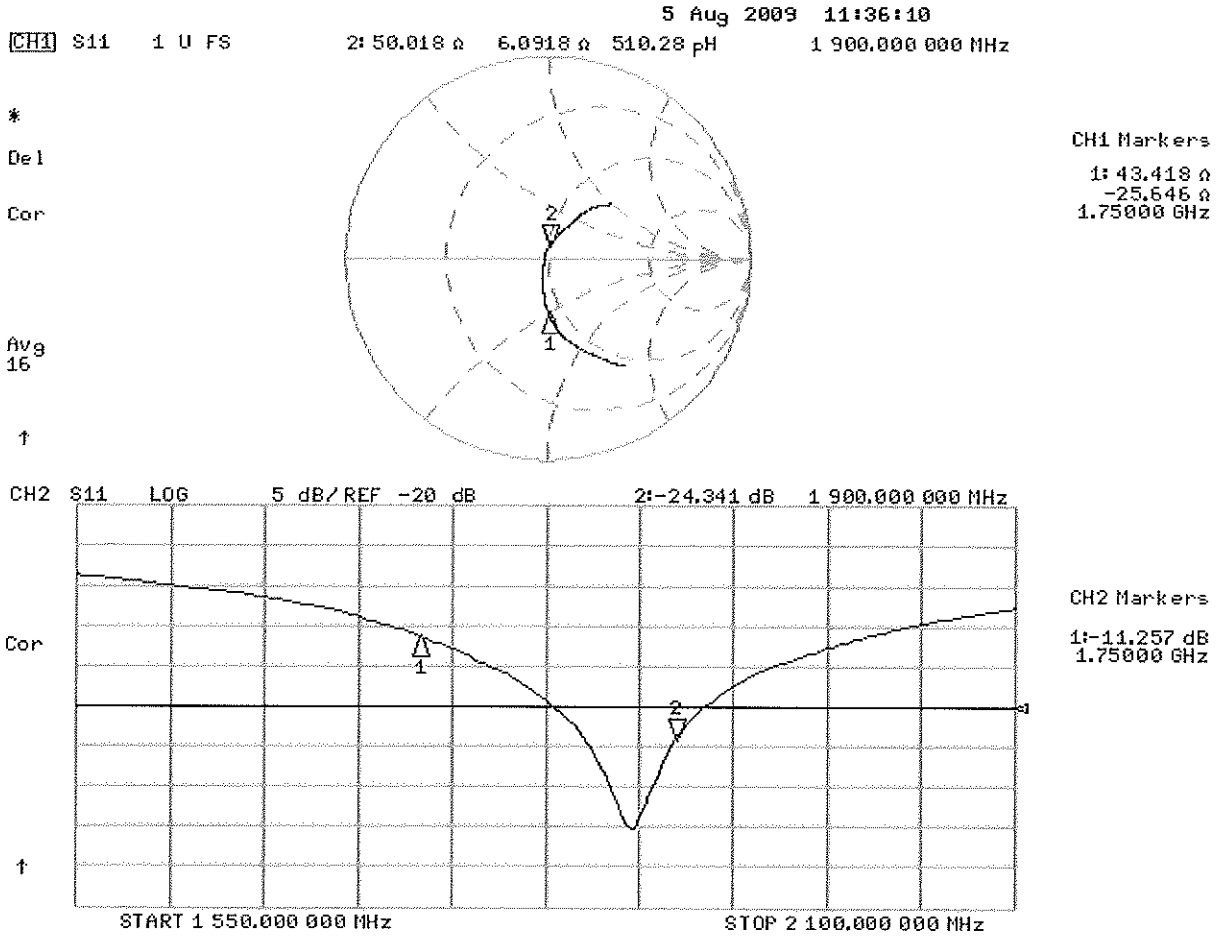

DASY5 Validation Report for Body TSL

Date/Time: 18.08.2009 14:14:25

Test Laboratory: SPEAG, Zurich, Switzerland

DUT: Dipole 1900 MHz; Type: D1900V2; Serial: D1900V2 - SN:5d080

Communication System: CW; Frequency: 1900 MHz; Duty Cycle: 1:1
Medium: MSL U10 BB
Medium parameters used: f = 1900 MHz; σ = 1.57 mho/m; ε_r = 53.9; ρ = 1000 kg/m^3
Phantom section: Flat Section
Measurement Standard: DASY5 (IEEE/IEC)

DASY5 Configuration:

- Probe: ES3DV3 - SN3205; ConvF(4.59, 4.59, 4.59); Calibrated: 26.06.2009
- Sensor-Surface: 3mm (Mechanical Surface Detection)
- Electronics: DAE4 Sn601; Calibrated: 07.03.2009
- Phantom: Flat Phantom 5.0 (back); Type: QD000P50AA; Serial: 1002
- Measurement SW: DASY5, V5.0 Build 120; SEMCAD X Version 13.4 Build 45

Pin = 250 mW; dip = 10 mm, scan at 3.0mm/Zoom Scan (dist=3.0mm, probe 0deg) (7x7x7)/Cube 0: Measurement grid: dx=5mm, dy=5mm, dz=5mm
Reference Value = 96.7 V/m; Power Drift = -0.00545 dB
Peak SAR (extrapolated) = 17.7 W/kg
SAR(1 g) = 10.3 mW/g; SAR(10 g) = 5.41 mW/g
Maximum value of SAR (measured) = 13.1 mW/g

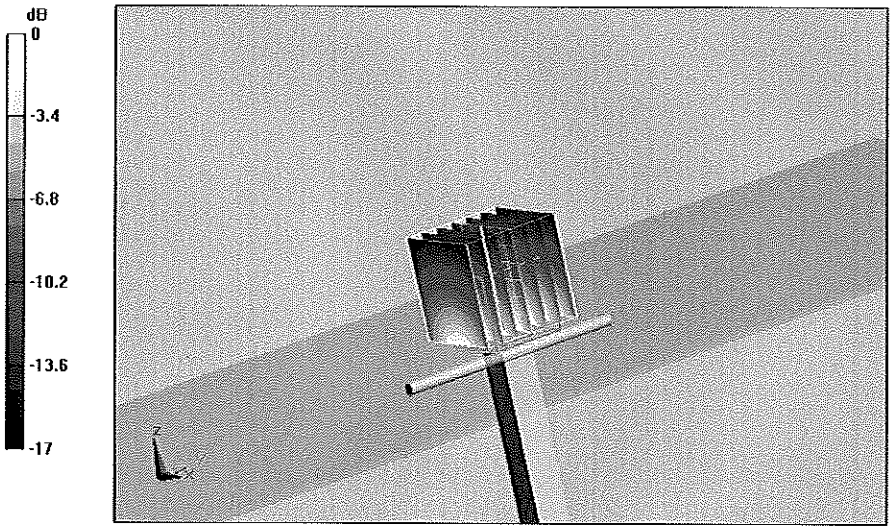

0 dB = 13.1mW/g

Impedance Measurement Plot for Body TSL

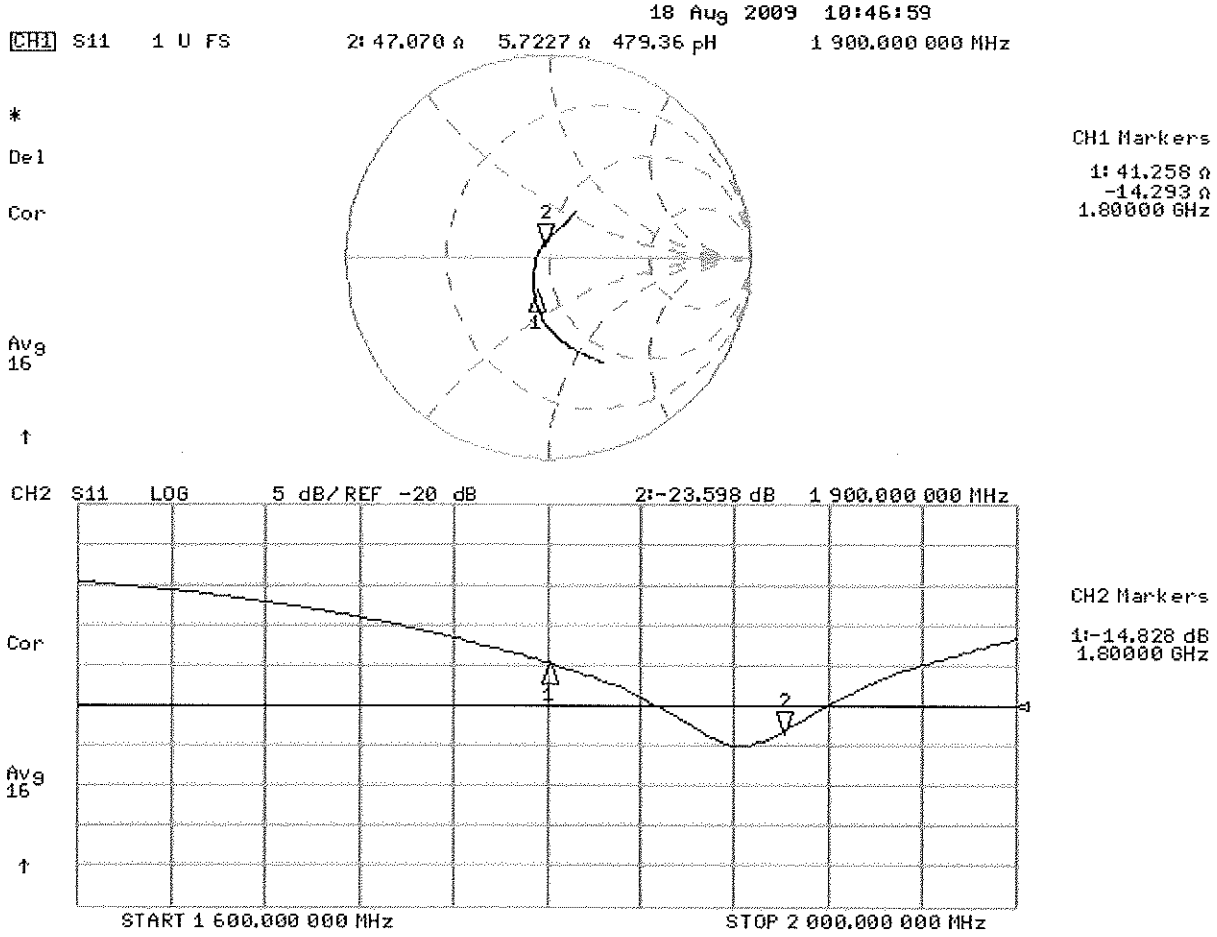

Calibration Laboratory of
Schmid & Partner
Engineering AG
Zeughausstrasse 43, 8004 Zurich, Switzerland

S Schweizerischer Kalibrierdienst
C Service suisse d'étalonnage
Servizio svizzero di taratura
S Swiss Calibration Service

Accredited by the Swiss Accreditation Service (SAS)
The Swiss Accreditation Service is one of the signatories to the EA Multilateral Agreement for the recognition of calibration certificates

Accreditation No.: **SCS 108**

Client **PC Test**

Certificate No: **D2450V2-797_Jan09**

CALIBRATION CERTIFICATE

Object	D2450V2 - SN: 797
Calibration procedure(s)	QA CAL-05.v7 Calibration procedure for dipole validation kits
Calibration date:	January 08, 2009
Condition of the calibrated item	In Tolerance

This calibration certificate documents the traceability to national standards, which realize the physical units of measurements (SI). The measurements and the uncertainties with confidence probability are given on the following pages and are part of the certificate.

All calibrations have been conducted in the closed laboratory facility: environment temperature (22 ± 3)°C and humidity < 70%.

Calibration Equipment used (M&TE critical for calibration)

Primary Standards	ID #	Cal Date (Certificate No.)	Scheduled Calibration
Power meter EPM-442A	GB37480704	08-Oct-08 (No. 217-00898)	Oct-09
Power sensor HP 8481A	US37292783	08-Oct-08 (No. 217-00898)	Oct-09
Reference 20 dB Attenuator	SN: S5086 (20g)	01-Jul-08 (No. 217-00864)	Jul-09
Type-N mismatch combination	SN: 5047.2 / 06327	01-Jul-08 (No. 217-00867)	Jul-09
Reference Probe ES3DV2	SN: 3025	28-Apr-08 (No. ES3-3025_Apr08)	Apr-09
DAE4	SN: 601	14-Mar-08 (No. DAE4-601_Mar08)	Mar-09

Secondary Standards	ID #	Check Date (in house)	Scheduled Check
Power sensor HP 8481A	MY41092317	18-Oct-02 (in house check Oct-07)	In house check: Oct-09
RF generator R&S SMT-06	100005	4-Aug-99 (in house check Oct-07)	In house check: Oct-09
Network Analyzer HP 8753E	US37390585 S4206	18-Oct-01 (in house check Oct-08)	In house check: Oct-09

	Name	Function	Signature
Calibrated by:	Jeton Kastrati	Laboratory Technician	
Approved by:	Katja Pokovic	Technical Manager	

Issued: January 12, 2009

This calibration certificate shall not be reproduced except in full without written approval of the laboratory.

Glossary:

TSL	tissue simulating liquid
ConvF	sensitivity in TSL / NORM x,y,z
N/A	not applicable or not measured

Calibration is Performed According to the Following Standards:

a) IEEE Std 1528-2003, "IEEE Recommended Practice for Determining the Peak Spatial-Averaged Specific Absorption Rate (SAR) in the Human Head from Wireless Communications Devices: Measurement Techniques", December 2003
b) IEC 62209-1, "Procedure to measure the Specific Absorption Rate (SAR) for hand-held devices used in close proximity to the ear (frequency range of 300 MHz to 3 GHz)", February 2005
c) Federal Communications Commission Office of Engineering & Technology (FCC OET), "Evaluating Compliance with FCC Guidelines for Human Exposure to Radiofrequency Electromagnetic Fields; Additional Information for Evaluating Compliance of Mobile and Portable Devices with FCC Limits for Human Exposure to Radiofrequency Emissions", Supplement C (Edition 01-01) to Bulletin 65

Additional Documentation:

d) DASY4/5 System Handbook

Methods Applied and Interpretation of Parameters:

- *Measurement Conditions:* Further details are available from the Validation Report at the end of the certificate. All figures stated in the certificate are valid at the frequency indicated.
- *Antenna Parameters with TSL:* The dipole is mounted with the spacer to position its feed point exactly below the center marking of the flat phantom section, with the arms oriented parallel to the body axis.
- *Feed Point Impedance and Return Loss:* These parameters are measured with the dipole positioned under the liquid filled phantom. The impedance stated is transformed from the measurement at the SMA connector to the feed point. The Return Loss ensures low reflected power. No uncertainty required.
- *Electrical Delay:* One-way delay between the SMA connector and the antenna feed point. No uncertainty required.
- *SAR measured:* SAR measured at the stated antenna input power.
- *SAR normalized:* SAR as measured, normalized to an input power of 1 W at the antenna connector.
- *SAR for nominal TSL parameters:* The measured TSL parameters are used to calculate the nominal SAR result.

Measurement Conditions

DASY system configuration, as far as not given on page 1.

DASY Version	DASY5	V5.0
Extrapolation	Advanced Extrapolation	
Phantom	Modular Flat Phantom V5.0	
Distance Dipole Center - TSL	10 mm	with Spacer
Zoom Scan Resolution	dx, dy, dz = 5 mm	
Frequency	2450 MHz ± 1 MHz	

Head TSL parameters

The following parameters and calculations were applied.

	Temperature	**Permittivity**	**Conductivity**
Nominal Head TSL parameters	22.0 °C	39.2	1.80 mho/m
Measured Head TSL parameters	(22.0 ± 0.2) °C	38.3 ± 6 %	1.83 mho/m ± 6 %
Head TSL temperature during test	(21.5 ± 0.2) °C	---	---

SAR result with Head TSL

SAR averaged over 1 cm³ (1 g) of Head TSL	Condition	
SAR measured	250 mW input power	13.1 mW / g
SAR normalized	normalized to 1W	52.4 mW / g
SAR for nominal Head TSL parameters [1]	normalized to 1W	**51.7 mW /g ± 17.0 % (k=2)**

SAR averaged over 10 cm³ (10 g) of Head TSL	condition	
SAR measured	250 mW input power	6.10 mW / g
SAR normalized	normalized to 1W	24.4 mW / g
SAR for nominal Head TSL parameters [1]	normalized to 1W	**24.2 mW /g ± 16.5 % (k=2)**

[1] Correction to nominal TSL parameters according to d), chapter "SAR Sensitivities"

Body TSL parameters

The following parameters and calculations were applied.

	Temperature	Permittivity	Conductivity
Nominal Body TSL parameters	22.0 °C	52.7	1.95 mho/m
Measured Body TSL parameters	(22.0 ± 0.2) °C	53.8 ± 6 %	2.01 mho/m ± 6 %
Body TSL temperature during test	(21.0 ± 0.2) °C	---	---

SAR result with Body TSL

SAR averaged over 1 cm³ (1 g) of Body TSL	Condition	
SAR measured	250 mW input power	13.4 mW / g
SAR normalized	normalized to 1W	53.6 mW / g
SAR for nominal Body TSL parameters [2]	normalized to 1W	**53.0 mW /g ± 17.0 % (k=2)**

SAR averaged over 10 cm³ (10 g) of Body TSL	condition	
SAR measured	250 mW input power	6.28 mW / g
SAR normalized	normalized to 1W	25.1 mW / g
SAR for nominal Body TSL parameters [2]	normalized to 1W	**25.0 mW /g ± 16.5 % (k=2)**

[2] Correction to nominal TSL parameters according to d), chapter "SAR Sensitivities"

Appendix

Antenna Parameters with Head TSL

Impedance, transformed to feed point	55.1 Ω + 3.0 jΩ
Return Loss	- 25.0 dB

Antenna Parameters with Body TSL

Impedance, transformed to feed point	49.4 Ω + 5.1 jΩ
Return Loss	- 25.8 dB

General Antenna Parameters and Design

Electrical Delay (one direction)	1.157 ns

After long term use with 100W radiated power, only a slight warming of the dipole near the feedpoint can be measured.

The dipole is made of standard semi-rigid coaxial cable. The center conductor of the feeding line is directly connected to the second arm of the dipole. The antenna is therefore short-circuited for DC-signals.
No excessive force must be applied to the dipole arms, because they might bend or the soldered connections near the feedpoint may be damaged.

Additional EUT Data

Manufactured by	SPEAG
Manufactured on	January 24, 2006

DASY5 Validation Report for Head TSL

Date/Time: 08.01.2009 11:10:09

Test Laboratory: SPEAG, Zurich, Switzerland

DUT: Dipole 2450 MHz; Type: D2450V2; Serial: D2450V2 - SN797

Communication System: CW; Frequency: 2450 MHz; Duty Cycle: 1:1
Medium: HSL U10 BB
Medium parameters used: f = 2450 MHz; σ = 1.83 mho/m; ε_r = 38.4; ρ = 1000 kg/m^3
Phantom section: Flat Section
Measurement Standard: DASY5 (IEEE/IEC)

DASY5 Configuration:

- Probe: ES3DV2 - SN3025; ConvF(4.4, 4.4, 4.4); Calibrated: 28.04.2008
- Sensor-Surface: 3.4mm (Mechanical Surface Detection)
- Electronics: DAE4 Sn601; Calibrated: 14.03.2008
- Phantom: Flat Phantom 5.0 (front); Type: QD000P50AA; Serial: 1001
- Measurement SW: DASY5, V5.0 Build 120; SEMCAD X Version 13.4 Build 45

Pin = 250 mW; d = 10 mm/Zoom Scan (7x7x7)/Cube 0: Measurement grid: dx=5mm, dy=5mm, dz=5mm
Reference Value = 93.8 V/m; Power Drift = 0.021 dB
Peak SAR (extrapolated) = 27.6 W/kg
SAR(1 g) = 13.1 mW/g; SAR(10 g) = 6.1 mW/g
Maximum value of SAR (measured) = 15.7 mW/g

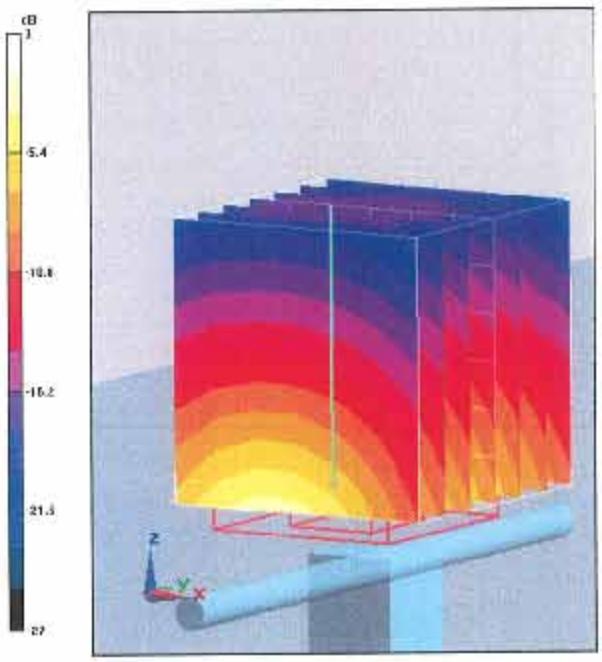

0 dB = 15.7mW/g

Impedance Measurement Plot for Head TSL

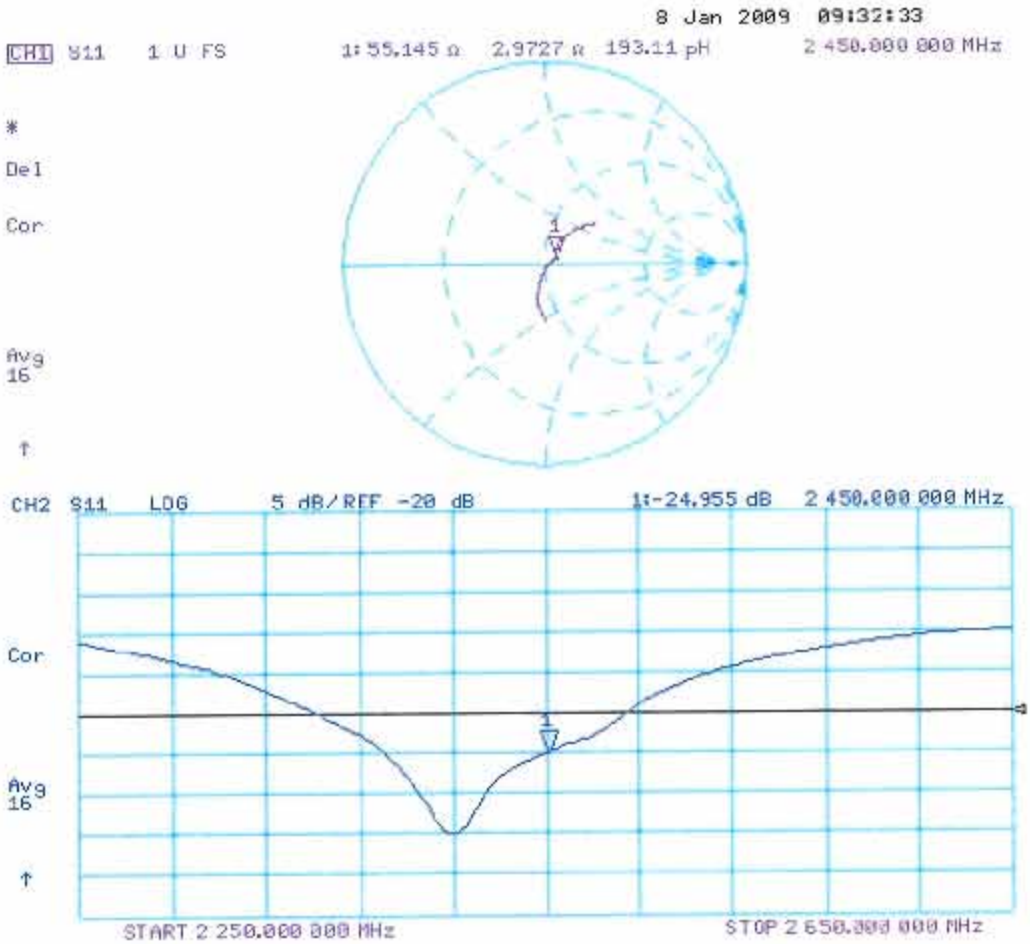

DASY5 Validation Report for Body TSL

Date/Time: 08.01.2009 13:23:34

Test Laboratory: SPEAG, Zurich, Switzerland

DUT: Dipole 2450 MHz; Type: D2450V2; Serial: D2450V2 - SN:797

Communication System: CW; Frequency: 2450 MHz; Duty Cycle: 1:1
Medium: MSL U10 BB
Medium parameters used: f = 2450 MHz; σ = 2.02 mho/m; ε_r = 53.9; ρ = 1000 kg/m^3
Phantom section: Flat Section
Measurement Standard: DASY5 (IEEE/IEC)

DASY5 Configuration:

- Probe: ES3DV2 - SN3025; ConvF(4.07, 4.07, 4.07); Calibrated: 28.04.2008
- Sensor-Surface: 3.4mm (Mechanical Surface Detection)
- Electronics: DAE4 Sn601; Calibrated: 14.03.2008
- Phantom: Flat Phantom 5.0 (back); Type: QD000P50AA; Serial: 1002
- Measurement SW: DASY5, V5.0 Build 120; SEMCAD X Version 13.4 Build 45

Pin = 250 mW; d = 10 mm/Zoom Scan (7x7x7)/Cube 0: Measurement grid: dx=5mm, dy=5mm, dz=5mm
Reference Value = 93.4 V/m; Power Drift = 0.012 dB
Peak SAR (extrapolated) = 27.1 W/kg
SAR(1 g) = 13.4 mW/g; SAR(10 g) = 6.28 mW/g
Maximum value of SAR (measured) = 16.7 mW/g

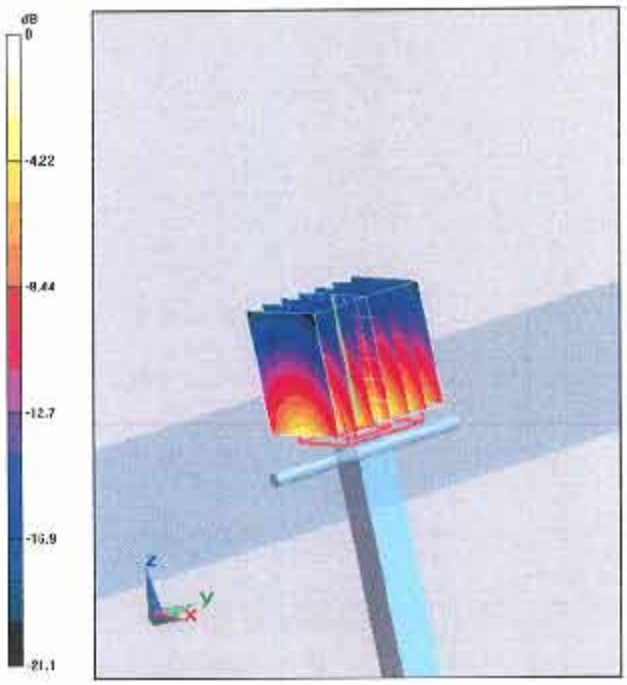

0 dB = 16.7mW/g
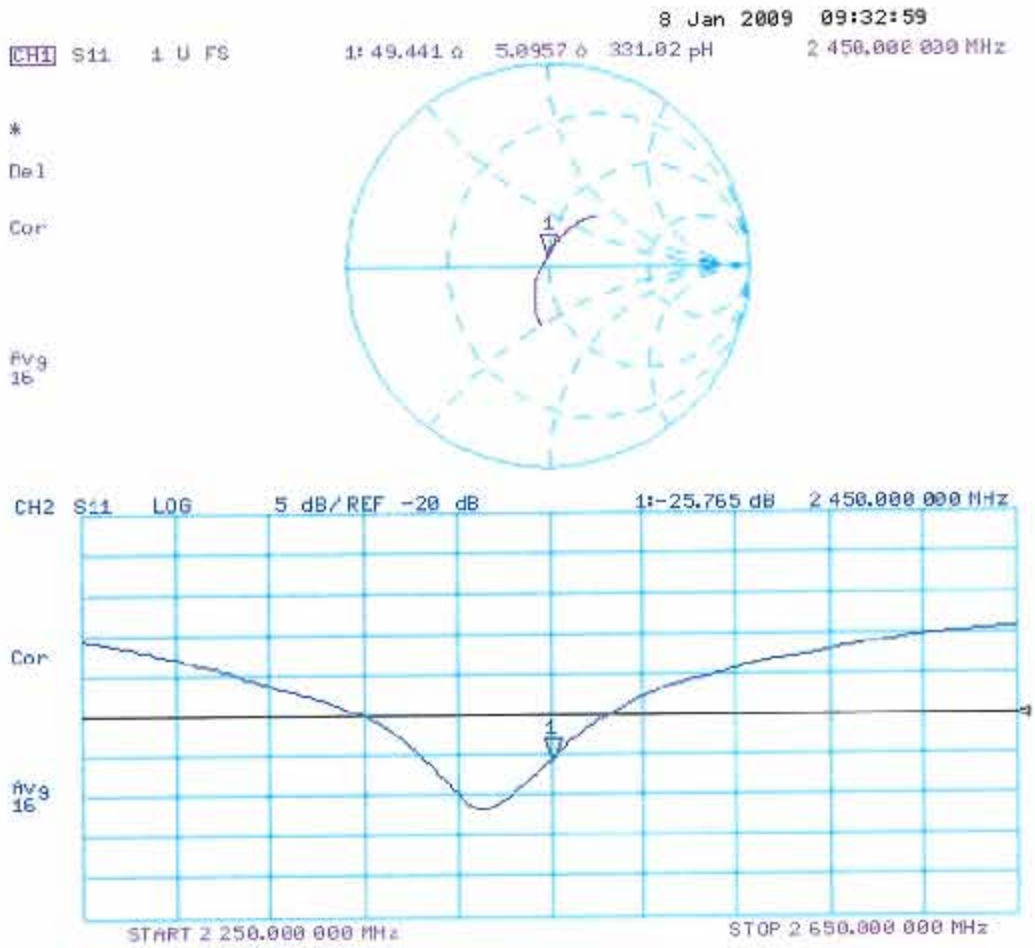
Impedance Measurement Plot for Body TSL