PCTEST ENGINEERING LABORATORY, INC.
6660-B Dobbin Road, Columbia, MD 21045 USA
Tel. +1.410.290.6652 / Fax +1.410.290.6654
http://www.pctestlab.com

# SAR COMPLIANCE EVALUATION REPORT

**Applicant Name:**
Samsung Electronics, Co. Ltd.
18600 Broadwick St.
Rancho Dominguez, CA 90220
United States

**Date of Testing:**
07/25/11 - 07/28/11
**Test Site/Location:**
PCTEST Lab, Columbia, MD, USA
**Test Report Serial No.:**
0Y1107191228.A3L

**FCC ID: A3LGTI9100P**

**APPLICANT: SAMSUNG ELECTRONICS, CO. LTD.**

**EUT Type:** 850/1900 GSM/GPRS/EDGE/WCDMA/HSPA Phone with Bluetooth, WLAN and NFC
**Application Type:** Certification
**FCC Rule Part(s):** CFR §2.1093; FCC/OET Bulletin 65 Supplement C [June 2001]
**Model(s):** GT-I9100P
**Test Device S/N.:** Pre-Production [S/N: FI-167-A, FI-167-C]

| Band & Mode | Tx Frequency | Conducted Power [dBm] | SAR | | |
|---|---|---|---|---|---|
| | | | 1 gm Head (W/kg) | 1 gm Body-Worn (W/kg) | 1 gm Hotspot (W/kg) |
| GSM 850 | 824.20 - 848.80 MHz | 32.47 | 0.12 | 0.50 | 0.50 |
| GSM 1900 | 1850.20 - 1909.80 MHz | 29.45 | 0.21 | 1.07 | 1.07 |
| WCDMA 850 | 826.40 - 846.60 MHz | 22.46 | 0.11 | 0.36 | 0.36 |
| WCDMA 1900 | 1852.4 - 1907.6 MHz | 22.89 | 0.37 | 1.12 | 1.12 |
| 2.4 GHz WLAN | 2412 - 2462 MHz | 17.61 | 0.10 | 0.08 | 0.08 |
| 5.2 GHz WLAN | 5180 - 5240 MHz | 11.65 | 0.07 | 0.03 | |
| 5.3 GHz WLAN | 5260 - 5320 MHz | 11.67 | 0.09 | 0.05 | |
| 5.5 GHz WLAN | 5500 - 5700 MHz | 12.54 | 0.08 | 0.03 | |
| 5.8 GHz WLAN | 5745 - 5825 MHz | 12.37 | 0.12 | 0.03 | |

This wireless portable device has been shown to be capable of compliance for localized specific absorption rate (SAR) for uncontrolled environment/general population exposure limits specified in ANSI/IEEE C95.1-1992 and has been tested in accordance with the measurement procedures specified in FCC/OET Bulletin 65 Supplement C (2001), IEEE 1528-2003 and in applicable Industry Canada Radio Standards Specifications (RSS); for North American frequency bands only.

I attest to the accuracy of data. All measurements reported herein were performed by me or were made under my supervision and are correct to the best of my knowledge and belief. I assume full responsibility for the completeness of these measurements and vouch for the qualifications of all persons taking them. Test results reported herein relate only to the item(s) tested.

*PCTEST certifies that no party to this application has been subject to a denial of Federal benefits that includes FCC benefits pursuant to Section 5301 of the Anti-Drug Abuse Act of 1988, 21 U.S.C. 862.*

Randy Ortanez
President

ACCREDITED
TESTING LABORATORY
CERTIFICATE #2041.01


© 2011 PCTEST Engineering Laboratory, Inc.

# TABLE OF CONTENTS


1 INTRODUCTION ..... 3

2 TEST SITE LOCATION ..... 4

3 SAR MEASUREMENT SETUP ..... 5

4 DASY E-FIELD PROBE SYSTEM ..... 7

5 PROBE CALIBRATION PROCESS ..... 8

6 PHANTOM AND EQUIVALENT TISSUES ..... 9

7 DOSIMETRIC ASSESSMENT & PHANTOM SPECS ..... 10

8 DEFINITION OF REFERENCE POINTS ..... 11

9 TEST CONFIGURATION POSITIONS ..... 12

10 FCC RF EXPOSURE LIMITS ..... 15

11 FCC 3G MEASUREMENT PROCEDURES ..... 16

12 SAR TESTING WITH IEEE 802.11 TRANSMITTERS ..... 20

13 FCC PERSONAL WIRELESS ROUTER CONFIGURATIONS ..... 23

14 SYSTEM VERIFICATION ..... 25

15 SAR DATA SUMMARY ..... 28

16 FCC MULTI-TX AND ANTENNA SAR CONSIDERATIONS ..... 44

17 EQUIPMENT LIST ..... 47

18 MEASUREMENT UNCERTAINTIES ..... 48

19 CONCLUSION ..... 50

20 REFERENCES ..... 51




© 2011 PCTEST Engineering Laboratory, Inc.

# 1 INTRODUCTION

The FCC has adopted the guidelines for evaluating the environmental effects of radio frequency (RF) radiation in ET Docket 93-62 on Aug. 6, 1996 to protect the public and workers from the potential hazards of RF emissions due to FCC-regulated portable devices. [1]

The safety limits used for the environmental evaluation measurements are based on the criteria published by the American National Standards Institute (ANSI) for localized specific absorption rate (SAR) in IEEE/ANSI C95.1-1992 Standard for Safety Levels with Respect to Human Exposure to Radio Frequency Electromagnetic Fields, 3 kHz to 300 GHz [3] and Health Canada RF Exposure Guidelines Safety Code 6 [24]. The measurement procedure described in IEEE/ANSI C95.3-2002 Recommended Practice for the Measurement of Potentially Hazardous Electromagnetic Fields - RF and Microwave [4] is used for guidance in measuring the Specific Absorption Rate (SAR) due to the RF radiation exposure from the Equipment Under Test (EUT). These criteria for SAR evaluation are similar to those recommended by the International Committee for Non-Ionizing Radiation Protection (ICNIRP) in Biological Effects and Exposure Criteria for Radiofrequency Electromagnetic Fields," Report No. Vol 74. SAR is a measure of the rate of energy absorption due to exposure to an RF transmitting source. SAR values have been related to threshold levels for potential biological hazards.

## 1.1 SAR Definition

Specific Absorption Rate is defined as the time derivative (rate) of the incremental energy (dU) absorbed by (dissipated in) an incremental mass (dm) contained in a volume element (dV) of a given density (ρ). It is also defined as the rate of RF energy absorption per unit mass at a point in an absorbing body (see Fig. 1-1).

$$SAR = \frac{d}{dt}\left(\frac{dU}{dm}\right) = \frac{d}{dt}\left(\frac{dU}{\rho\, dv}\right)$$

**Figure 1-1**
**SAR Mathematical Equation**

**SAR is expressed in units of Watts per Kilogram (W/kg).**

$$SAR = \frac{\sigma \cdot E^2}{\rho}$$

where:

σ = conductivity of the tissue-simulating material (S/m)
ρ = mass density of the tissue-simulating material (kg/m$^3$)
E = Total RMS electric field strength (V/m)

NOTE: The primary factors that control rate of energy absorption were found to be the wavelength of the incident field in relation to the dimensions and geometry of the irradiated organism, the orientation of the organism in relation to the polarity of field vectors, the presence of reflecting surfaces, and whether conductive contact is made by the organism with a ground plane.[6]


© 2011 PCTEST Engineering Laboratory, Inc.

# 2 TEST SITE LOCATION

## 2.1 INTRODUCTION

The map at the right shows the location of the PCTEST LABORATORY in Columbia, Maryland. It is in proximity to the FCC Laboratory, the Baltimore-Washington International (BWI) airport, the city of Baltimore and Washington, DC.

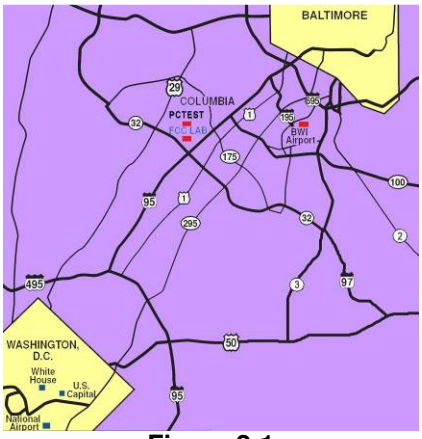


**Figure 2-1**
Map of the Greater Baltimore and Metropolitan Washington, D.C. area

These measurement tests were conducted at the PCTEST Engineering Laboratory, Inc. facility in New Concept Business Park, Guilford Industrial Park, Columbia, Maryland. The site address is 6660-B Dobbin Road, Columbia, MD 21045. The test site is one of the highest points in the Columbia area with an elevation of 390 feet above mean sea level. The site coordinates are 39° 11'15" N latitude and 76° 49' 38" W longitude. The facility is 1.5 miles north of the FCC laboratory, and the ambient signal and ambient signal strength are approximately equal to those of the FCC laboratory. There are no FM or TV transmitters within 15 miles of the site. The detailed description of the measurement facility was found to be in compliance with the requirements of § 2.948 according to ANSI C63.4 on January 27, 2006 and Industry Canada.

## 2.2 Test Facility / Accreditations:

Measurements were performed at an independent accredited PCTEST Engineering Lab located in Columbia, MD 21045, U.S.A.

- PCTEST Lab is accredited to ISO 17025-2005 by the American Association for Laboratory Accreditation (A2LA) in Specific Absorption Rate (SAR) testing, Hearing-Aid Compatibility (HAC), Battery Safety, CTIA Test Plans, and wireless testing for FCC and Industry Canada Rules.
- PCTEST Lab is accredited to ISO 17025 by U.S. National Institute of Standards and Technology (NIST) under the National Voluntary Laboratory Accreditation Program (NVLAP Lab code: 100431-0) in EMC, FCC and Telecommunications.
- PCTEST facility is an FCC registered (PCTEST Reg. No. 90864) test facility with the site description report on file and has met all the requirements specified in Section 2.948 of the FCC Rules and Industry Canada (IC-2451).
- PCTEST Lab is a recognized U.S. Conformity Assessment Body (CAB) in EMC and R&TTE (n.b. 0982) under the U.S.-EU Mutual Recognition Agreement (MRA).
- PCTEST TCB is a Telecommunication Certification Body (TCB) accredited to ISO/IEC Guide 65 by the American National Standards Institute (ANSI) in all scopes of FCC Rules and all Industry Canada Standards (RSS).

- PCTEST facility is an IC registered (IC-2451) test laboratory with the site description on file at Industry Canada.
- PCTEST is a CTIA Authorized Test Laboratory (CATL) for AMPS and CDMA, and EvDO mobile phones.
- PCTEST is a CTIA Authorized Test Laboratory (CATL) for Over-the-Air (OTA) Antenna Performance testing for AMPS, CDMA, GSM, GPRS, EGPRS, UMTS (W-CDMA), CDMA 1xEVDO Data, CDMA 1xRTT Data


© 2011 PCTEST Engineering Laboratory, Inc.

# 3 SAR MEASUREMENT SETUP

## 3.1 Robotic System

Measurements are performed using the DASY4 automated dosimetric assessment system. The DASY4 is made by Schmid & Partner Engineering AG (SPEAG) in Zurich, Switzerland and consists of a high precision robotics system (Staubli), robot controller, desktop computer, near-field probe, probe alignment sensor, and the SAM phantom containing the head or body equivalent material. The robot is a six-axis industrial robot, performing precise movements to position the probe to the location (points) of maximum electromagnetic field (EMF) (see Figure 3-1).

## 3.2 System Hardware

A cell controller system contains the power supply, robot controller, teach pendant (Joystick), and a remote control used to drive the robot motors. The PC consists of the SAR Measurement Software DASY4, A/D interface card, monitor, mouse, and keyboard. The Staubli Robot is connected to the cell controller to allow software manipulation of the robot. A data acquisition electronic (DAE) circuit that performs the signal amplification, signal multiplexing, A/D conversion, offset measurements, mechanical surface detection, collision detection, etc. is connected to the Electro-optical coupler (EOC). The EOC performs the conversion from the optical into digital electric signal from the DAE and transfers data to the PC card.

## 3.3 System Electronics

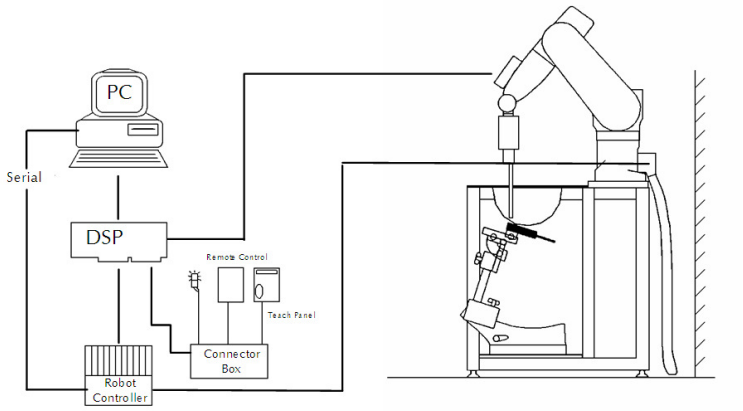


**Figure 3-1**
**SAR Measurement System Setup**

The DAE consists of a highly sensitive electrometer-grade auto-zeroing preamplifier, a channel and gain-switching multiplexer, a fast 16 bit AD-converter and a command decoder and control logic unit. Transmission to the PC-card is accomplished through an optical downlink for data and status information and an optical uplink for commands and clock lines. The mechanical probe mounting device includes two different sensor systems for frontal and sidewise probe contacts. They are also used for mechanical surface detection and probe collision detection. The robot uses its own controller with a built in VME-bus computer.


© 2011 PCTEST Engineering Laboratory, Inc.

## 3.4 Automated Test System Specifications

Test Software: SPEAG DASY4 version 4.7 Measurement Software
Robot: Stäubli Unimation Corp. Robot RX60L
Repeatability: 0.02 mm
No. of Axes: 6

Data Acquisition Electronic System (DAE)

Data Converter
Features: Signal Amplifier, multiplexer, A/D converter & control logic
Software: SEMCAD software
Connecting Lines: Optical Downlink for data and status info
Optical upload for commands and clock

PC Interface Card
Function: Link to DAE
16-bit A/D converter for surface detection system
Two Serial & Ethernet link to robotics
Direct emergency stop output for robot

Phantom
Type: SAM Twin Phantom (V4.0)
Shell Material: Composite
Thickness: 2.0 ± 0.2 mm

**Figure 3-2**
**SAR Measurement System**


© 2011 PCTEST Engineering Laboratory, Inc.

# 4 DASY E-FIELD PROBE SYSTEM

## 4.1 Probe Measurement System

**Figure 4-1**
**SAR System**

The SAR measurements were conducted with the dosimetric probe designed in the classical triangular configuration (see Figure 4-3) and optimized for dosimetric evaluation [9]. The probe is constructed using the thick film technique; with printed resistive lines on ceramic substrates. The probe is equipped with an optical multi-fiber line ending at the front of the probe tip. It is connected to the EOC box on the robot arm and provides an automatic detection of the phantom surface. Half of the fibers are connected to a pulsed infrared transmitter, the other half to a synchronized receiver. As the probe approaches the surface, the reflection from the surface produces a coupling from the transmitting to the receiving fibers. This reflection increases first during the approach, reaches maximum and then decreases. If the probe is flatly touching the surface, the coupling is zero. The distance of the coupling maximum to the surface is independent of the surface reflectivity and largely independent of the surface to probe angle. The DASY4 software reads the reflection during a software approach and looks for the maximum using a 2nd order curve fitting (see Figure 5-1). The approach is stopped at reaching the maximum.

## 4.2 Probe Specifications

| | |
|---|---|
| **Model(s):** | ES3DV2, ES3DV3, EX3DV4 |
| **Frequency Range:** | 10 MHz – 6.0 GHz (EX3DV4)<br>10 MHz – 4 GHz (ES3DV3, ES3DV2) |
| **Calibration:** | In head and body simulating tissue at Frequencies from 300 up to 6000MHz |
| **Linearity:** | ± 0.2 dB (30 MHz to 6 GHz) for EX3DV4<br>± 0.2 dB (30 MHz to 4 GHz) for ES3DV3, ES3DV2 |
| **Dynamic Range:** | 10 mW/kg – 100 W/kg |
| **Probe Length:** | 330 mm |
| **Probe Tip Length:** | 20 mm |
| **Body Diameter:** | 12 mm |
| **Tip Diameter:** | 2.5 mm (3.9mm for ES3DV3) |
| **Tip-Center:** | 1 mm (2.0 mm for ES3DV3) |
| **Application:** | SAR Dosimetry Testing<br>Compliance tests of mobile phones<br>Dosimetry in strong gradient fields |

**Figure 4-2**
**Near-Field Probe**

**Figure 4-3**
**Triangular Probe Configuration**


© 2011 PCTEST Engineering Laboratory, Inc.

# 5 PROBE CALIBRATION PROCESS

## 5.1 Dosimetric Assessment Procedure

Each E-Probe/Probe Amplifier combination has unique calibration parameters. A TEM cell calibration procedure is conducted to determine the proper amplifier settings to enter in the probe parameters. The amplifier settings are determined for a given frequency by subjecting the probe to a known E-field density (1 mW/cm$^2$) using an RF Signal generator, TEM cell, and RF Power Meter.

## 5.2 Free Space Assessment

The free space E-field from amplified probe outputs is determined in a test chamber. This calibration can be performed in a TEM cell if the frequency is below 1 GHz and in a waveguide or other methodologies above 1 GHz for free space. For the free space calibration, the probe is placed in the volumetric center of the cavity and at the proper orientation with the field. The probe is rotated 360 degrees until the three channels show the maximum reading. The power density readings equates to 1 mW/cm$^2$.

## 5.3 Temperature Assessment

E-field temperature correlation calibration is performed in a flat phantom filled with the appropriate simulated head tissue. The E-field in the medium correlates with the temperature rise in the dielectric medium. For temperature correlation calibration a RF transparent thermistor-based temperature probe is used in conjunction with the E-field probe.

$$SAR = C\frac{\Delta T}{\Delta t}$$

where:

$\Delta t$ = exposure time (30 seconds),
C = heat capacity of tissue (brain or muscle),
$\Delta T$ = temperature increase due to RF exposure.

$$SAR = \frac{|E|^2 \cdot \sigma}{\rho}$$

where:

$\sigma$ = simulated tissue conductivity,
$\rho$ = Tissue density (1.25 g/cm$^3$ for brain tissue)

SAR is proportional to $\Delta T/\Delta t$, the initial rate of tissue heating, before thermal diffusion takes place. The electric field in the simulated tissue can be used to estimate SAR by equating the thermally derived SAR to that with the E- field component.

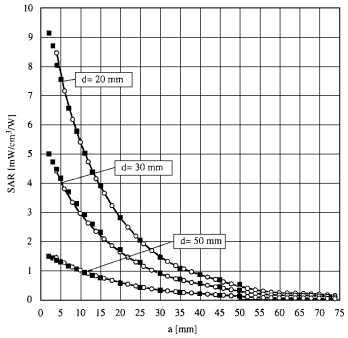


**Figure 5-1 E-Field and Temperature measurements at 900MHz [9]**

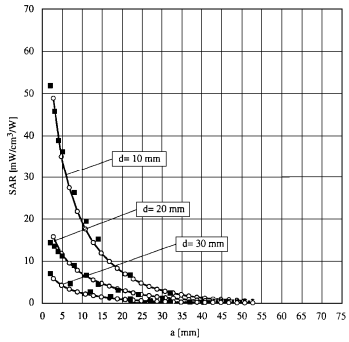


**Figure 5-2 E-Field and temperature measurements at 1.9GHz [9]**


© 2011 PCTEST Engineering Laboratory, Inc.

# 6 PHANTOM AND EQUIVALENT TISSUES

## 6.1 SAM Phantoms

**Figure 6-1**
**SAM Phantoms**

The SAM Twin Phantom V4.0 is constructed of a fiberglass shell integrated in a table. The shape of the shell is based on data from an anatomical study designed to represent the 90th percentile of the population [12][13]. The phantom enables the dosimetric evaluation of SAR for both left and right handed handset usage, as well as body-worn usage using the flat phantom region. Reference markings on the Phantom allow the complete setup of all predefined phantom positions and measurement grids by manually teaching three points in the robot. The shell phantom has a 2mm shell thickness (except the ear region where shell thickness increases to 6 mm).

## 6.2 Tissue Simulating Mixture Characterization

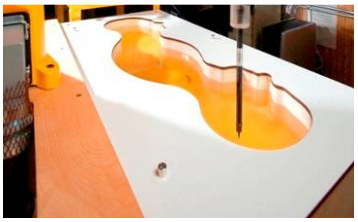

**Figure 6-2**
**SAM Phantom with Simulating Tissue**

The mixture is characterized to obtain proper dielectric constant (permittivity) and conductivity of the tissue of interest. The tissue dielectric parameters recommended in IEEE 1528 and IEC 62209 have been used as targets for the compositions, and are to match within 5%, per the FCC recommendations.

**Table 6-1**
**Composition of the Tissue Equivalent Matter**

| Frequency (MHz) | 835 | 835 | 1900 | 1900 | 2450 | 2450 | 5200-5800 | 5200-5800 |
|---|---|---|---|---|---|---|---|---|
| Tissue | Head | Body | Head | Body | Head | Body | Head | Body |
| Ingredients (% by weight) | | | | | | | | |
| Bactericide | 0.1 | 0.1 | | | | | | |
| DGBE | | | 44.92 | 29.44 | 7.99 | 26.7 | | |
| HEC | 1 | 1 | | | | | | |
| NaCl | 1.45 | 0.94 | 0.18 | 0.39 | 0.16 | 0.1 | | |
| Sucrose | 57 | 44.9 | | | | | | |
| Triton X-100 | | | | | 19.97 | | 17.24 | 10.67 |
| Diethylenglycol monohexylether | | | | | | | 17.24 | 10.67 |
| Water | 40.45 | 53.06 | 54.9 | 70.17 | 71.88 | 73.2 | 65.52 | 78.66 |


© 2011 PCTEST Engineering Laboratory, Inc.

# 7 DOSIMETRIC ASSESSMENT & PHANTOM SPECS

## 7.1 Measurement Procedure

The evaluation was performed using the following procedure:

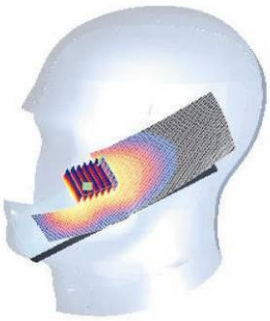

**Figure 7-1**
**Sample SAR Area Scan**

1. The SAR distribution at the exposed side of the head was measured at a distance no greater than 5.0 mm from the inner surface of the shell. The area covered the entire dimension of the head and the horizontal grid spacing was 15mm x 15mm.
2. The point SAR measurement was taken at the maximum SAR region determined from Step 1 to enable the monitoring of SAR fluctuations/drifts during testing the 1 gram cube. This fixed point was measured and used as a reference value.
3. Based on the area scan data, the area of the maximum absorption was determined by spline interpolation. Around this point, a volume of 32mm x 32mm x 30mm (fine resolution volume scan, zoom scan) was assessed by measuring 5 x 5 x 7 points. On this basis of this data set, the spatial peak SAR value was evaluated with the following procedure (see references or the DASY manual for more details):
   a. The data was extrapolated to the surface of the outer-shell of the phantom. The combined distance extrapolated was the combined distance from the center of the dipoles 2.7mm away from the tip of the probe housing plus the 1.2 mm distance between the surface and the lowest measuring point. The extrapolation was based on a least-squares algorithm. A polynomial of the fourth order was calculated through the points in the z-axis (normal to the phantom shell).
   b. After the maximum interpolated values were calculated between the points in the cube, the SAR was averaged over the spatial volume (1g or 10g) using a 3D-Spline interpolation algorithm. The 3D-spline is composed of three one-dimensional splines with the “Not a knot” condition (in x, y, and z directions). The volume was then integrated with the trapezoidal algorithm. One thousand points (10 x 10 x 10) were obtained through interpolation, in order to calculate the averaged SAR.
   c. All neighboring volumes were evaluated until no neighboring volume with a higher average value was found.
4. The SAR reference value, at the same location as step 2, was re-measured after the zoom scan was complete. If the value deviated by more than 5%, the evaluation was repeated.
5. For 5 GHz testing finer resolution zoom scans were preformed as specified by FCC SAR Measurement Requirements for 3 – 6 GHz, KDB pub 865664. The 5 GHz zoom scan requires a minimum volume of 24mm x 24mm x 20mm and 7 x 7 x 11 points.

## 7.2 Specific Anthropomorphic Mannequin (SAM) Specifications

The phantom for handset SAR assessment testing is a low-loss dielectric shell, with shape and dimensions derived from the anthropometric data of the 90th percentile adult male head dimensions as tabulated by the US Army. The SAM Twin Phantom shell is bisected along the mid-sagittal plane into right and left halves (see Figure 7-2). The perimeter sidewalls of each phantom halves are extended to allow filling with liquid to a depth that is sufficient to minimize reflections from the upper surface. The liquid depth is maintained at a minimum depth of 15 cm.

**Figure 7-2**
**SAM Twin Phantom Shell**


© 2011 PCTEST Engineering Laboratory, Inc.

# 8 DEFINITION OF REFERENCE POINTS

## 8.1 EAR REFERENCE POINT

Figure 8-1 shows the front, back and side views of the SAM Twin Phantom. The point "M" is the reference point for the center of the mouth, "LE" is the left ear reference point (ERP), and "RE" is the right ERP. The ERP is 15mm posterior to the entrance to the ear canal (EEC) along the B-M line (Back-Mouth), as shown in Figure 8-1. The plane passing through the two ear canals and M is defined as the Reference Plane. The line N-F (Neck-Front) is perpendicular to the reference plane and passing through the RE (or LE) is called the Reference Pivoting Line (see Figure 8-2). Line B-M is perpendicular to the N-F line. Both N-F and B-M lines are marked on the external phantom shell to facilitate handset positioning [5].

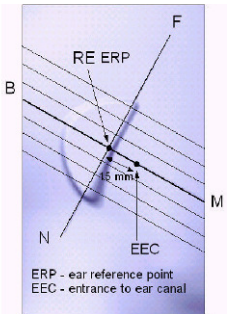


**Figure 8-1**
**Close-Up Side view of ERP**

## 8.2 HANDSET REFERENCE POINTS

Two imaginary lines on the handset were established: the vertical centerline and the horizontal line. The test device was placed in a normal operating position with the "test device reference point" located along the "vertical centerline" on the front of the device aligned to the "ear reference point" (See Figure 8-3). The "test device reference point" was than located at the same level as the center of the ear reference point. The test device was positioned so that the "vertical centerline" was bisecting the front surface of the handset at it's top and bottom edges, positioning the "ear reference point" on the outer surface of the both the left and right head phantoms on the ear reference point.

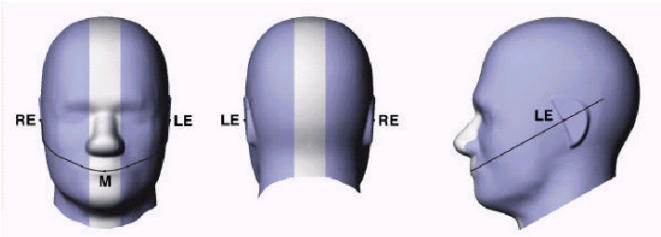


**Figure 8-2**
**Front, back and side view of SAM Twin Phantom**

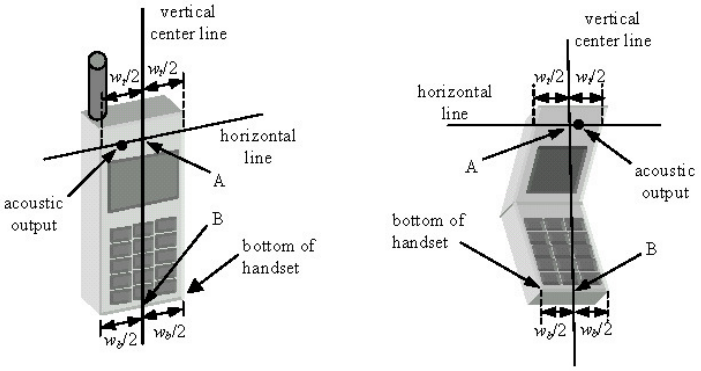


**Figure 8-3**
**Handset Vertical Center & Horizontal Line Reference Points**


© 2011 PCTEST Engineering Laboratory, Inc.

# 9 TEST CONFIGURATION POSITIONS

## 9.1 Device Holder

The DASY device holder has been made out of low-loss POM material having the following dielectric parameters: relative permittivity ε = 3 and loss tangent δ = 0.02.

## 9.2 Positioning for Cheek/Touch

1. The test device was positioned with the handset close to the surface of the phantom such that point A is on the (virtual) extension of the line passing through points RE and LE on the phantom (see Figure 9-1), such that the plane defined by the vertical center line and the horizontal line of the phone is approximately parallel to the sagittal plane of the phantom.

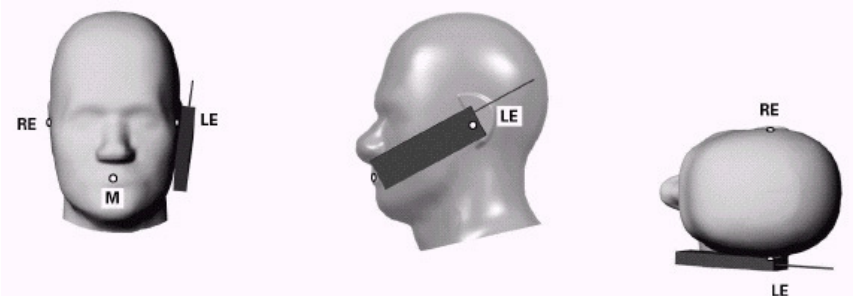


**Figure 9-1 Front, Side and Top View of Cheek/Touch Position**

2. The handset was translated towards the phantom along the line passing through RE & LE until the handset touches the ear.
3. While maintaining the handset in this plane, the handset was rotated around the LE-RE line until the vertical centerline was in the plane normal to MB-NF including the line MB (reference plane).
4. The phone was hen rotated around the vertical centerline until the phone (horizontal line) was symmetrical was respect to the line NF.
5. While maintaining the vertical centerline in the reference plane, keeping point A on the line passing through RE and LE, and maintaining the phone contact with the ear, the handset was rotated about the line NF until any point on the handset made contact with a phantom point below the ear (cheek) (See Figure 9-2).

## 9.3 Positioning for Ear / 15º Tilt

With the test device aligned in the “Cheek/Touch Position”:

1. While maintaining the orientation of the phone, the phone was retracted parallel to the reference plane far enough to enable a rotation of the phone by 15degree.
2. The phone was then rotated around the horizontal line by 15 degree.
3. While maintaining the orientation of the phone, the phone was moved parallel to the reference plane until any part of the phone touches the head. (In this position, point A was located on the line RE-LE). The tilted position is obtained when the contact is on the pinna. If the contact was at any location other than the pinna, the angle of the phone would then be reduced. The tilted position was obtained when any part of the phone was in contact of the ear as well as a second part of the phone was in contact with the head (see Figure 9-2).


© 2011 PCTEST Engineering Laboratory, Inc.

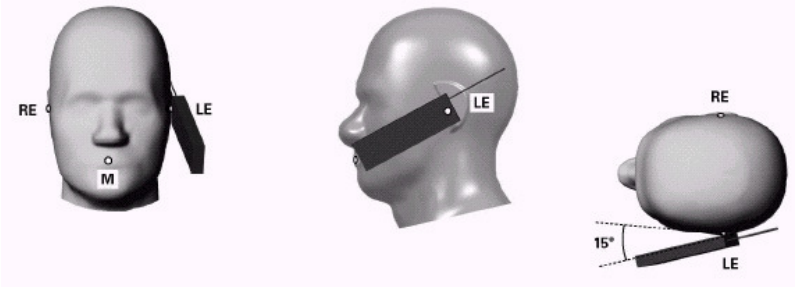


**Figure 9-2 Front, Side and Top View of Ear/15º Tilt Position**

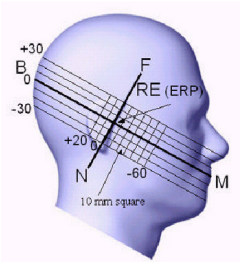


**Figure 9-3**
**Side view w/ relevant markings**

**Figure 9-4 Body SAR Sample Photo**
**(Not Actual EUT)**

## 9.4 SAR Evaluations near the Mouth/Jaw Regions of the SAM Phantom

Antennas located near the bottom of a phone may require SAR measurements around the mouth and jaw regions of the SAM head phantom. This typically applies to clam-shell style phones that are generally longer in the unfolded normal use positions or to certain older style long rectangular phones. It has been known for some time that there are SAR measurement difficulties in these regions of the SAM phantom. SAR probes are calibrated in tissue equivalent liquids with sufficient separation between the probe sensors and nearby physical boundaries to ensure scattering does not affect probe calibration. When the probe tip is moved into tight regions with multiple boundaries surrounding its sensors, probe calibration and measurement accuracy can become questionable. In addition, these measurement locations often require a probe to be tilted at steep angles, where it may no longer comply with calibration requirements and measurement protocols, or satisfy the required measurement uncertainty. In some situations it is not feasible to tilt the probe or rotate the phantom, as suggested by measurement standards, to conduct these measurements.

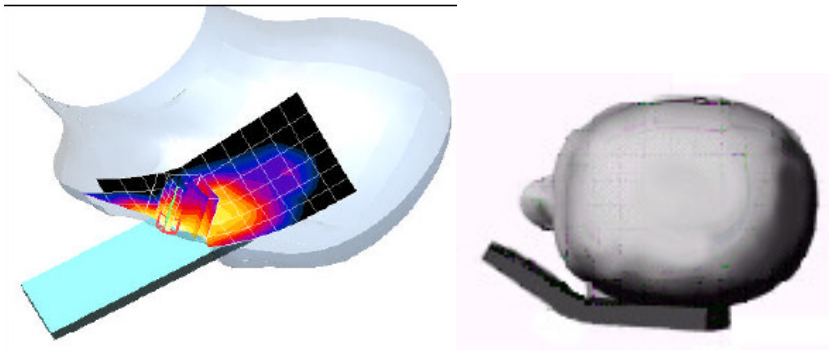

**Figure 9-5**
**SAR Scans near the Jaw/Mouth**

In order to ensure there is sufficient conservativeness for ensuring compliance until practical solutions are available, additional measurement considerations are necessary to address these technical difficulties. When measurements are required near the mouth, nose, jaw or similar tight regions of the SAM phantom,


© 2011 PCTEST Engineering Laboratory, Inc.

area or zoom scans are often unable to fully enclose the peak SAR location as required by IEEE 1528 and Supplement C, due to probe orientation and positioning difficulties. Even when limited measurements are possible, the test results could be questionable due to probe calibration and measurement uncertainty issues. Under these circumstances, the following procedures apply, adopted from the FCC guidance on SAR handsets document publication 648474. The SAR required in these regions of SAM should be measured using a flat phantom. **Rectangular shaped phones** should be positioned with its bottom edge positioned from the flat phantom with the same distance provided by the cheek touching position using SAM. The ear reference point (ERP, as defined for SAM) of the phone should be positioned ½ cm from the flat phantom shell. **Clam-shell phones** should be positioned with the hinge against a smooth edge of the flat phantom where the upper half of the phone is unfolded and extended beyond the phantom side wall. The lower half of the phone is secured in the test device holder at a fixed distance below the flat phantom determined by the minimum separation along the lower edge of the phone in the cheek touching position using SAM. Any case with substantial variation in separation distance along the lower edge of a clam shell is discussed with the FCC for best-to-use methodology.

The flat phantom data should allow test results to be compared uniformly across measurement systems, until suitable solutions are available in measurement standards to address certain probe calibration and positioning issues, due to implementation differences between horizontal and upright SAM configurations. These flat phantom procedures are only applicable for stand-alone SAR evaluation in tight regions of the SAM phantom, where measurement is not feasible or test results can be questionable due to probe calibration and accessibility issues. Details on device positioning and photos showing how separation distances are determined are included in the SAR report Photographs. SAR for other regions of the head must be evaluated using SAM; therefore, a phone with antennas at different locations may require flat and SAM phantom evaluation for the different antennas.

## 9.5 Body Holster /Belt Clip Configurations

Body-worn operating configurations are tested with the belt-clips and holsters attached to the device and positioned against a flat phantom in a normal use configuration (see Figure 9-4). A device with a headset output is tested with a headset connected to the device.

Accessories for Body-worn operation configurations are divided into two categories: those that do not contain metallic components and those that do contain metallic components. When multiple accessories that do not contain metallic components are supplied with the device, the device is tested with only the accessory that dictates the closest spacing to the body. Then multiple accessories that contain metallic components are tested with the device with each accessory. If multiple accessories share an identical metallic component (i.e. the same metallic belt-clip used with different holsters with no other metallic components) only the accessory that dictates the closest spacing to the body is tested.

Body-worn accessories may not always be supplied or available as options for some devices intended to be authorized for body-worn use. In this case, a test configuration with a separation distance between the back of the device and the flat phantom is used. Test position spacing was documented. Transmitters that are designed to operate in front of a person's face, as in push-to-talk configurations, are tested for SAR compliance with the front of the device positioned to face the flat phantom in head fluid. For devices that are carried next to the body such as a shoulder, waist or chest-worn transmitters, SAR compliance is tested with the accessories, including headsets and microphones, attached to the device and positioned against a flat phantom in a normal use configuration.


© 2011 PCTEST Engineering Laboratory, Inc.

# 10 FCC RF EXPOSURE LIMITS

## 10.1 Uncontrolled Environment

UNCONTROLLED ENVIRONMENTS are defined as locations where there is the exposure of individuals who have no knowledge or control of their exposure. The general population/uncontrolled exposure limits are applicable to situations in which the general public may be exposed or in which persons who are exposed as a consequence of their employment may not be made fully aware of the potential for exposure or cannot exercise control over their exposure. Members of the general public would come under this category when exposure is not employment-related; for example, in the case of a wireless transmitter that exposes persons in its vicinity.

## 10.2 Controlled Environment

CONTROLLED ENVIRONMENTS are defined as locations where there is exposure that may be incurred by persons who are aware of the potential for exposure, (i.e. as a result of employment or occupation). In general, occupational/controlled exposure limits are applicable to situations in which persons are exposed as a consequence of their employment, who have been made fully aware of the potential for exposure and can exercise control over their exposure. This exposure category is also applicable when the exposure is of a transient nature due to incidental passage through a location where the exposure levels may be higher than the general population/uncontrolled limits, but the exposed person is fully aware of the potential for exposure and can exercise control over his or her exposure by leaving the area or by some other appropriate means.

**Table 10-1**
**SAR Human Exposure Specified in ANSI/IEEE C95.1-1992 and Health Canada Safety Code 6**

| HUMAN EXPOSURE LIMITS | | |
|---|---|---|
| | UNCONTROLLED ENVIRONMENT<br>*General Population*<br>(W/kg) or (mW/g) | CONTROLLED ENVIRONMENT<br>*Occupational*<br>(W/kg) or (mW/g) |
| SPATIAL PEAK SAR<br>Brain | 1.6 | 8.0 |
| SPATIAL AVERAGE SAR<br>Whole Body | 0.08 | 0.4 |
| SPATIAL PEAK SAR<br>Hands, Feet, Ankles, Wrists | 4.0 | 20 |

1. The Spatial Peak value of the SAR averaged over any 1 gram of tissue (defined as a tissue volume in the shape of a cube) and over the appropriate averaging time.
2. The Spatial Average value of the SAR averaged over the whole body.
3. The Spatial Peak value of the SAR averaged over any 10 grams of tissue (defined as a tissue volume in the shape of a cube) and over the appropriate averaging time.


© 2011 PCTEST Engineering Laboratory, Inc.

# 11 FCC 3G MEASUREMENT PROCEDURES

Power measurements were performed using a base station simulator under digital average power.

## 11.1 Procedures Used to Establish RF Signal for SAR

The following procedures are according to FCC KDB 941225 D01 "SAR Measurement Procedures for 3G Devices v02".

The device was placed into a simulated call using a base station simulator in a RF shielded chamber. Establishing connections in this manner ensure a consistent means for testing SAR and are recommended for evaluating SAR [4]. Devices under test were evaluated prior to testing, with a fully charged battery and were configured to operate at maximum output power. In order to verify that the device was tested throughout the SAR test at maximum output power, the SAR measurement system measures a "point SAR" at an arbitrary reference point at the start and end of the 1 gram SAR evaluation, to assess for any power drifts during the evaluation. Any power drifts of greater than 5% were repeated.

## 11.2 SAR Measurement Conditions for UMTS per FCC KDB Pub. 941225 D01

### 11.2.1 Output Power Verification

Maximum output power is measured on the High, Middle and Low channels for each applicable transmission band according to the general descriptions in section 5.2 of 3GPP TS 34.121, using the appropriate RMC or AMR with TPC (transmit power control) set to all "1s".

### 11.2.2 Head SAR Measurements for Handsets

SAR for head exposure configurations is measured using the 12.2 kbps RMC with TPC bits configured to all "1s". SAR in AMR configurations is not required when the maximum average output of each RF channel for 12.2 kbps AMR is less than 0.25 dB higher than that measured in 12.2 kbps RMC. Otherwise, SAR is measured on the maximum output channel in 12.2 AMR with a 3.4 kbps SRB (signaling radio bearer) using the exposure configuration that resulted in the highest SAR for that RF channel in the 12.2 kbps RMC mode.

### 11.2.3 Body SAR Measurements

SAR for body exposure configurations is measured using the 12.2 kbps RMC with the TPC bits all "1s".

### 11.2.4 SAR Measurements for Handsets with Rel 5 HSDPA

Body SAR for HSDPA is not required for handsets with HSDPA capabilities when the maximum average output power of each RF channel with HSDPA active is less than 0.25 dB higher than that measured without HSDPA using 12.2 kbps RMC and the maximum SAR for 12.2 kbps RMC is $\leq$ 75% of the SAR limit. Otherwise, SAR is measured for HSDPA, using an FRC with H-Set 1 in Sub-test 1 and a 12.2 kbps RMC configured in Test Loop Mode 1, using the highest body SAR configuration measured in 12.2 kbps RMC without HSDPA, on the maximum output channel with the body exposure configuration that resulted in the highest SAR in 12.2 kbps RMC mode for that RF channel.


© 2011 PCTEST Engineering Laboratory, Inc.

The H-set used in FRC for HSDPA should be configured according to the UE category of a test device. The number of HS-DSCH/HSPDSCHs, HARQ processes, minimum inter-TTI interval, transport block sizes and RV coding sequence are defined by the applicable H-set. To maintain a consistent test configuration and stable transmission conditions, QPSK is used in the FRC for SAR testing. HS-DPCCH should be configured with a CQI feedback cycle of 2 ms to maintain a constant rate of active CQI slots. DPCCH and DPDCH gain factors of βc=9 and βd=15, and power offset parameters of ΔACK= ΔNACK =5 and ΔCQI=2 is used. The CQI value is determined by the UE category, transport block size, number of HS-PDSCHs and modulation used in the FRC.

### 11.2.5 SAR Measurements for Handsets with Rel 6 HSUPA

Body SAR for HSUPA is not required when the maximum average output of each RF channel with HSUPA/HSDPA active is less than 0.25 dB higher than as measured without HSUPA/HSDPA using 12.2 kbps RMC and maximum SAR for 12.2 kbps RMC is ≤ 75 % of the SAR limit. Otherwise SAR is measured on the maximum output channel for the body exposure configuration produced highest SAR in 12.2 kbps RMC for that RF channel, using the additional procedures under "Release 6 HSPA data devices"

Head SAR for VOIP operations under HSPA is not required when maximum average output of each RF channel with HSPA is less than 0.25 dB higher than as measured using 12.2 kbps RMC. Otherwise SAR is measured using same HSPA configuration as used for body SAR.

| Sub-test | $\beta_c$ | $\beta_d$ | $\beta_d$ (SF) | $\beta_c/\beta_d$ | $\beta_{hs}$(1) | $\beta_{ec}$ | $\beta_{ed}$ | $\beta_{ed}$ (SF) | $\beta_{ed}$ (codes) | CM(2) (dB) | MPR (dB) | AG(4) Index | E-TFCI |
|---|---|---|---|---|---|---|---|---|---|---|---|---|---|
| 1 | 11/15(3) | 15/15(3) | 64 | 11/15(3) | 22/15 | 209/225 | 1039/225 | 4 | 1 | 1.0 | 0.0 | 20 | 75 |
| 2 | 6/15 | 15/15 | 64 | 6/15 | 12/15 | 12/15 | 94/75 | 4 | 1 | 3.0 | 2.0 | 12 | 67 |
| 3 | 15/15 | 9/15 | 64 | 15/9 | 30/15 | 30/15 | $\beta_{ed1}$: 47/15<br>$\beta_{ed2}$: 47/15 | 4 | 2 | 2.0 | 1.0 | 15 | 92 |
| 4 | 2/15 | 15/15 | 64 | 2/15 | 4/15 | 2/15 | 56/75 | 4 | 1 | 3.0 | 2.0 | 17 | 71 |
| 5 | 15/15(4) | 15/15(4) | 64 | 15/15(4) | 30/15 | 24/15 | 134/15 | 4 | 1 | 1.0 | 0.0 | 21 | 81 |

Note 1: $\Delta_{ACK}$, $\Delta_{NACK}$ and $\Delta_{CQI} = 8 \Leftrightarrow A_{hs} = \beta_{hs}/\beta_c = 30/15 \Leftrightarrow \beta_{hs} = 30/15 * \beta_c$.
Note 2: CM = 1 for $\beta_c/\beta_d$ =12/15, $\beta_{hs}/\beta_c$=24/15. For all other combinations of DPDCH, DPCCH, HS- DPCCH, E-DPDCH and E-DPCCH the MPR is based on the relative CM difference.
Note 3: For subtest 1 the $\beta_c/\beta_d$ ratio of 11/15 for the TFC during the measurement period (TF1, TF0) is achieved by setting the signaled gain factors for the reference TFC (TF1, TF1) to $\beta_c$ = 10/15 and $\beta_d$ = 15/15.
Note 4: For subtest 5 the $\beta_c/\beta_d$ ratio of 15/15 for the TFC during the measurement period (TF1, TF0) is achieved by setting the signaled gain factors for the reference TFC (TF1, TF1) to $\beta_c$ = 14/15 and $\beta_d$ = 15/15.
Note 5: Testing UE using E-DPDCH Physical Layer category 1 Sub-test 3 is not required according to TS 25.306 Table 5.1g.
Note 6: $\beta_{ed}$ can not be set directly; it is set by Absolute Grant Value.


© 2011 PCTEST Engineering Laboratory, Inc.

## 11.3 RF Conducted Powers

### 11.3.1 GSM Conducted Powers

| | | Maximum Burst-Averaged Output Power | | | | | | | | |
|---|---|---|---|---|---|---|---|---|---|---|
| | | *Voice* | *GPRS/EDGE Data (GMSK)* | | | | *EDGE Data (8-PSK)* | | | |
| **Band** | **Channel** | **GSM [dBm] CS (1 Slot)** | **GPRS [dBm] 1 Tx Slot** | **GPRS [dBm] 2 Tx Slot** | **GPRS [dBm] 3 Tx Slot** | **GPRS [dBm] 4 Tx Slot** | **EDGE [dBm] 1 Tx Slot** | **EDGE [dBm] 2 Tx Slot** | **EDGE [dBm] 3 Tx Slot** | **EDGE [dBm] 4 Tx Slot** |
| **GSM 850** | 128 | 32.45 | 32.47 | 30.50 | **28.98** | 27.48 | 25.90 | 26.04 | 26.04 | 23.08 |
| | 190 | 32.45 | 32.44 | 30.53 | **28.98** | 27.49 | 25.95 | 26.07 | 26.12 | 23.18 |
| | 251 | 32.45 | 32.45 | 30.52 | **28.99** | 27.51 | 26.01 | 26.10 | 26.14 | 23.15 |
| **GSM 1900** | 512 | 29.39 | 29.40 | 28.41 | 26.62 | 25.61 | 25.20 | 25.18 | 25.21 | 22.53 |
| | 661 | 29.41 | 29.45 | 28.47 | 26.66 | 25.67 | 25.27 | 25.28 | 25.28 | 22.61 |
| | 810 | 29.40 | 29.44 | 28.46 | 26.63 | 25.64 | 25.29 | 25.30 | 25.29 | 22.60 |

| | | Calculated Maximum Frame-Averaged Output Power | | | | | | | | |
|---|---|---|---|---|---|---|---|---|---|---|
| | | *Voice* | *GPRS/EDGE Data (GMSK)* | | | | *EDGE Data (8-PSK)* | | | |
| **Band** | **Channel** | **GSM [dBm] CS (1 Slot)** | **GPRS [dBm] 1 Tx Slot** | **GPRS [dBm] 2 Tx Slot** | **GPRS [dBm] 3 Tx Slot** | **GPRS [dBm] 4 Tx Slot** | **EDGE [dBm] 1 Tx Slot** | **EDGE [dBm] 2 Tx Slot** | **EDGE [dBm] 3 Tx Slot** | **EDGE [dBm] 4 Tx Slot** |
| **GSM 850** | 128 | 23.42 | 23.44 | 24.48 | **24.72** | 24.47 | 16.87 | 20.02 | 21.78 | 20.07 |
| | 190 | 23.42 | 23.41 | 24.51 | **24.72** | 24.48 | 16.92 | 20.05 | 21.86 | 20.17 |
| | 251 | 23.42 | 23.42 | 24.50 | **24.73** | 24.50 | 16.98 | 20.08 | 21.88 | 20.14 |
| **GSM 1900** | 512 | 20.36 | 20.37 | 22.39 | 22.36 | 22.60 | 16.17 | 19.16 | 20.95 | 19.52 |
| | 661 | 20.38 | 20.42 | 22.45 | 22.40 | 22.66 | 16.24 | 19.26 | 21.02 | 19.60 |
| | 810 | 20.37 | 20.41 | 22.44 | 22.37 | 22.63 | 16.26 | 19.28 | 21.03 | 19.59 |

Note: Both burst-averaged and calculated frame-averaged powers are included. The bolded GPRS/EDGE modes were selected according to the highest frame-averaged output power table per FCC KDB Publication 941225 D03.

GPRS/EDGE (GMSK) conducted powers were measured with CS1 and EDGE (8-PSK) conducted powers were measured with MCS7.

**GSM Class:** B
**GPRS Multislot class:** 12 (max 4 Tx Uplink slots)
**EDGE Multislot class:** 12 (max 4Tx Uplink slots)
**DTM Multislot Class:** N/A


© 2011 PCTEST Engineering Laboratory, Inc.

### 11.3.2 HSPA Conducted Powers

| 3GPP Release Version | Mode | 3GPP 34.121 Subtest | Cellular Band [dBm] | | | PCS Band [dBm] | | | βc | βd | MPR |
|---|---|---|---|---|---|---|---|---|---|---|---|
| | | | 4132 | 4183 | 4233 | 9262 | 9400 | 9538 | | | |
| 99 | WCDMA | 12.2 kbps RMC | **22.46** | 22.37 | 22.33 | **22.89** | 22.83 | 22.81 | - | - | - |
| 99 | | 12.2 kbps AMR | 22.45 | 22.34 | 22.29 | 22.78 | 22.72 | 22.75 | - | - | - |
| 6 | HSDPA | Subtest 1 | **22.43** | 22.34 | 22.27 | **22.79** | 22.70 | 22.71 | 2 | 15 | 0 |
| 6 | | Subtest 2 | 21.50 | 21.39 | 21.35 | 21.85 | 21.73 | 21.80 | 11 | 15 | 0 |
| 6 | | Subtest 3 | 21.03 | 20.91 | 20.92 | 21.30 | 21.24 | 21.30 | 15 | 8 | 0.5 |
| 6 | | Subtest 4 | 20.77 | 20.65 | 20.65 | 20.83 | 20.77 | 20.73 | 15 | 4 | 0.5 |
| 6 | HSUPA | Subtest 1 | 21.27 | 21.18 | 21.16 | 21.38 | 21.32 | 21.34 | 10 | 15 | 0 |
| 6 | | Subtest 2 | 19.23 | 19.13 | 19.19 | 18.89 | 18.75 | 18.81 | 6 | 15 | 2 |
| 6 | | Subtest 3 | 20.05 | 19.96 | 19.94 | 19.47 | 19.41 | 19.47 | 15 | 9 | 1 |
| 6 | | Subtest 4 | 19.71 | 19.60 | 19.56 | 19.06 | 19.04 | 19.12 | 2 | 15 | 2 |
| 6 | | Subtest 5 | **21.28** | 21.20 | 21.16 | **21.46** | 21.37 | 21.43 | 14 | 15 | 0 |

WCDMA mode in Body SAR was tested under RMC 12.2 kbps with HSPA Inactive per KDB Publication 941225 D01. HSPA SAR tests were not required since the average output power of the HSPA subtests was not more than 0.25 dB higher than the RMC level and SAR was less than 1.2 W/kg.

MPR for some HSUPA subtests may be more than expected (i.e. up to 2.5 dB more power reduction possible than 3GPP expected MPR, but also as low as 0 dB power reduction) according to the chipset implementation in this model. Detailed information is included in the operational description explaining how the MPR is applied for this model.

This device is only capable of HSUPA in the uplink (QPSK in the uplink), but is capable of HSPA+ in the downlink. Information about the uplink and downlink capabilities are explained in further detail in the technical descriptions for this model.

**Figure 11-1**
**Power Measurement Setup**


© 2011 PCTEST Engineering Laboratory, Inc.

# 12 SAR TESTING WITH IEEE 802.11 TRANSMITTERS

Normal network operating configurations are not suitable for measuring the SAR of 802.11 a/b/g/n transmitters. Unpredictable fluctuations in network traffic and antenna diversity conditions can introduce undesirable variations in SAR results. The SAR for these devices should be measured using chipset based test mode software to ensure the results are consistent and reliable.

## 12.1 General Device Setup

Chipset based test mode software is hardware dependent and generally varies among manufacturers. The device operating parameters established in test mode for SAR measurements must be identical to those programmed in production units, including output power levels, amplifier gain settings and other RF performance tuning parameters. The test frequencies should correspond to actual channel frequencies defined for domestic use. SAR for devices with switched diversity should be measured with only one antenna transmitting at a time during each SAR measurement, according to a fixed modulation and data rate. The same data pattern should be used for all measurements.

## 12.2 Frequency Channel Configurations [27]

802.11 a/b/g/n and 5 GHz operating modes are tested independently according to the service requirements in each frequency band. 802.11 b/g modes are tested on channels 1, 6 and 11. 802.11a is tested for UNII operations on channels 36 and 48 in the 5.15-5.25 GHz band; channels 52 and 64 in the 5.25-5.35 GHz band; channels 104, 116, 124 and 136 in the 5.470-5.725 GHz band; and channels 149 and 161 in the 5.8 GHz band. When 5.8 GHz §15.247 is also available, channels 149, 157 and 165 should be tested instead of the UNII channels. These are referred to as the "default test channels". 2.4 GHz 802.11g/n mode was evaluated only if the output power was 0.25 dB higher than the 802.11b mode. 5 GHz 802.11n mode was evaluated only if the output power was 0.25 dB higher than the 802.11a mode.

**Table 12-1**
**802.11 Test Channels per FCC Requirements**

| Mode | | GHz | Channel | Turbo Channel | "Default Test Channels" §15.247 802.11b | §15.247 802.11g | UNII | |
|---|---|---|---|---|---|---|---|---|
| 802.11 b/g | | 2.412 | 1 | | √ | ∇ | | |
| | | 2.437 | 6 | 6 | √ | ∇ | | |
| | | 2.462 | 11 | | √ | ∇ | | |
| 802.11a | UNII | 5.18 | 36 | | | | √ | |
| | | 5.20 | 40 | 42 (5.21 GHz) | | | | * |
| | | 5.22 | 44 | | | | | * |
| | | 5.24 | 48 | 50 (5.25 GHz) | | | √ | |
| | | 5.26 | 52 | | | | √ | |
| | | 5.28 | 56 | 58 (5.29 GHz) | | | | * |
| | | 5.30 | 60 | | | | | * |
| | | 5.32 | 64 | | | | √ | |
| | | 5.500 | 100 | Unknown | | | | * |
| | | 5.520 | 104 | | | | √ | |
| | | 5.540 | 108 | | | | | * |
| | | 5.560 | 112 | | | | | * |
| | | 5.580 | 116 | | | | √ | |
| | | 5.600 | 120 | | | | | * |
| | | 5.620 | 124 | | | | √ | |
| | | 5.640 | 128 | | | | | * |
| | | 5.660 | 132 | | | | | * |
| | | 5.680 | 136 | | | | √ | |
| | | 5.700 | 140 | | | | | * |
| | UNII or §15.247 | 5.745 | 149 | | √ | | √ | |
| | | 5.765 | 153 | 152 (5.76 GHz) | | * | | * |
| | | 5.785 | 157 | | √ | | | * |
| | | 5.805 | 161 | 160 (5.80 GHz) | | * | √ | |
| | §15.247 | 5.825 | 165 | | √ | | | |


© 2011 PCTEST Engineering Laboratory, Inc.

## Table 12-2
## IEEE 802.11b Average RF Power

| Mode | Freq [MHz] | Channel | Conducted Power [dBm] Data Rate [Mbps] | | | |
|---|---|---|---|---|---|---|
| | | | 1 | 2 | 5.5 | 11 |
| 802.11b | 2412 | 1 | 17.48 | 17.34 | 17.37 | 17.10 |
| 802.11b | 2437 | 6 | **17.61** | 17.40 | 17.62 | 17.31 |
| 802.11b | 2462 | 11 | 17.56 | 17.47 | 17.51 | 17.46 |

## Table 12-3
## IEEE 802.11g Average RF Power

| Mode | Freq [MHz] | Channel | Conducted Power [dBm] Data Rate [Mbps] | | | | | | | |
|---|---|---|---|---|---|---|---|---|---|---|
| | | | 6 | 9 | 12 | 18 | 24 | 36 | 48 | 54 |
| 802.11g | 2412 | 1 | 13.76 | 13.77 | 13.71 | 13.72 | 13.74 | 13.80 | 13.76 | 13.77 |
| 802.11g | 2437 | 6 | 13.91 | 13.84 | 13.84 | 13.93 | 13.88 | 13.90 | 13.92 | 13.93 |
| 802.11g | 2462 | 11 | 13.99 | 14.03 | 13.98 | 14.02 | 13.98 | 14.06 | 13.92 | 14.00 |

## Table 12-4
## IEEE 802.11n Average RF Power

| Mode | Freq [MHz] | Channel | Conducted Power [dBm] Data Rate [Mbps] | | | | | | | |
|---|---|---|---|---|---|---|---|---|---|---|
| | | | 6.5 | 13 | 20 | 26 | 39 | 52 | 58 | 65 |
| 802.11n | 2412 | 1 | 11.83 | 11.81 | 11.72 | 11.78 | 11.73 | 11.72 | 11.80 | 11.74 |
| 802.11n | 2437 | 6 | 11.87 | 11.78 | 11.88 | 11.84 | 11.93 | 11.87 | 11.84 | 11.85 |
| 802.11n | 2462 | 11 | 12.05 | 11.99 | 11.98 | 11.96 | 11.92 | 11.97 | 12.01 | 12.00 |

## Table 12-5
## IEEE 802.11a Average RF Power

| Mode | Freq [MHz] | Channel | Conducted Power [dBm] Data Rate [Mbps] | | | | | | | |
|---|---|---|---|---|---|---|---|---|---|---|
| | | | 6 | 9 | 12 | 18 | 24 | 36 | 48 | 54 |
| 802.11a | *5180* | *36* | 11.57 | 11.59 | 11.53 | 11.41 | 11.56 | 11.60 | 11.66 | 11.76 |
| 802.11a | 5200 | 40 | 11.62 | 11.64 | 11.59 | 11.63 | 11.65 | 11.61 | 11.78 | 11.80 |
| 802.11a | 5220 | 44 | 11.61 | 11.63 | 11.60 | 11.73 | 11.66 | 11.79 | 11.86 | 11.74 |
| 802.11a | *5240* | *48* | **11.65** | 11.62 | 11.66 | 11.71 | 11.79 | 11.87 | 11.82 | 11.84 |
| 802.11a | *5260* | *52* | 11.64 | 11.69 | 11.72 | 11.77 | 11.78 | 11.82 | 11.74 | 11.85 |
| 802.11a | 5280 | 56 | **11.67** | 11.68 | 11.71 | 11.76 | 11.79 | 11.84 | 11.90 | 11.87 |
| 802.11a | 5300 | 60 | 11.66 | 11.76 | 11.69 | 11.75 | 11.76 | 11.86 | 11.91 | 11.89 |
| 802.11a | *5320* | *64* | 11.64 | 11.61 | 11.67 | 11.68 | 11.84 | 11.80 | 11.89 | 11.87 |
| 802.11a | 5500 | 100 | **12.54** | 12.56 | 12.55 | 12.58 | 12.59 | 12.61 | 12.60 | 12.71 |
| 802.11a | *5520* | *104* | 12.42 | 12.39 | 12.43 | 12.47 | 12.49 | 12.46 | 12.51 | 12.45 |
| 802.11a | 5540 | 108 | 12.29 | 12.27 | 12.32 | 12.23 | 12.34 | 12.46 | 12.41 | 12.49 |
| 802.11a | 5560 | 112 | 12.24 | 12.19 | 12.17 | 12.22 | 12.20 | 12.26 | 12.32 | 12.31 |
| 802.11a | *5580* | *116* | 12.08 | 12.01 | 12.08 | 12.11 | 12.14 | 12.12 | 12.19 | 12.28 |
| 802.11a | 5600 | 120 | 11.89 | 11.88 | 11.91 | 11.94 | 12.01 | 11.98 | 12.04 | 12.03 |
| 802.11a | *5620* | *124* | 11.85 | 11.75 | 11.81 | 11.86 | 11.84 | 11.86 | 11.92 | 11.93 |
| 802.11a | 5640 | 128 | 11.71 | 11.69 | 11.72 | 11.76 | 11.73 | 11.79 | 11.77 | 11.91 |
| 802.11a | 5660 | 132 | 11.54 | 11.61 | 11.59 | 11.67 | 11.66 | 11.69 | 11.72 | 11.75 |
| 802.11a | *5680* | *136* | 11.52 | 11.53 | 11.57 | 11.54 | 11.58 | 11.68 | 11.61 | 11.63 |
| 802.11a | 5700 | 140 | 11.47 | 11.36 | 11.41 | 11.45 | 11.51 | 11.54 | 11.50 | 11.53 |
| 802.11a | *5745* | *149* | **12.37** | 12.41 | 12.46 | 12.43 | 12.49 | 12.44 | 12.53 | 12.54 |
| 802.11a | 5765 | 153 | 12.29 | 12.32 | 12.27 | 12.34 | 12.33 | 12.37 | 12.45 | 12.43 |
| 802.11a | *5785* | *157* | 12.30 | 12.25 | 12.24 | 12.32 | 12.31 | 12.29 | 12.46 | 12.41 |
| 802.11a | *5805* | *161* | 12.28 | 12.16 | 12.29 | 12.14 | 12.28 | 12.34 | 12.29 | 12.26 |
| 802.11a | 5825 | 165 | 12.29 | 12.38 | 12.41 | 12.44 | 12.47 | 12.49 | 12.52 | 12.43 |


© 2011 PCTEST Engineering Laboratory, Inc.

**Table 12-6**
**IEEE 802.11n Average RF Power**

| Mode | Freq [MHz] | Channel | Conducted Power [dBm] Data Rate [Mbps] | | | | | | | |
|---|---|---|---|---|---|---|---|---|---|---|
| | | | 6.5 | 13 | 20 | 26 | 39 | 52 | 58 | 65 |
| 802.11n | *5180* | *36* | 10.14 | 10.21 | 10.23 | 10.27 | 10.32 | 10.24 | 10.34 | 10.42 |
| 802.11n | 5200 | 40 | 10.20 | 10.42 | 10.39 | 10.43 | 10.36 | 10.39 | 10.48 | 10.38 |
| 802.11n | 5220 | 44 | 10.41 | 10.37 | 10.38 | 10.42 | 10.44 | 10.52 | 10.39 | 10.44 |
| 802.11n | *5240* | *48* | 10.38 | 10.37 | 10.33 | 10.42 | 10.46 | 10.57 | 10.42 | 10.48 |
| 802.11n | *5260* | *52* | 10.23 | 10.16 | 10.22 | 10.28 | 10.31 | 10.43 | 10.47 | 10.28 |
| 802.11n | 5280 | 56 | 10.22 | 10.15 | 10.21 | 10.34 | 10.42 | 10.21 | 10.31 | 10.33 |
| 802.11n | 5300 | 60 | 10.12 | 10.24 | 10.23 | 10.18 | 10.32 | 10.24 | 10.39 | 10.42 |
| 802.11n | *5320* | *64* | 10.16 | 10.17 | 10.22 | 10.14 | 10.21 | 10.12 | 10.20 | 10.29 |
| 802.11n | 5500 | 100 | 10.28 | 10.33 | 10.31 | 10.34 | 10.35 | 10.39 | 10.46 | 10.33 |
| 802.11n | *5520* | *104* | 10.18 | 10.12 | 10.22 | 10.14 | 10.24 | 10.21 | 10.29 | 10.34 |
| 802.11n | 5540 | 108 | 9.99 | 10.06 | 10.11 | 10.08 | 10.12 | 10.06 | 10.13 | 10.16 |
| 802.11n | 5560 | 112 | 9.96 | 9.88 | 9.97 | 10.01 | 9.91 | 10.07 | 9.96 | 10.01 |
| 802.11n | *5580* | *116* | 9.86 | 9.84 | 9.85 | 9.92 | 9.81 | 9.93 | 9.90 | 9.87 |
| 802.11n | 5600 | 120 | 9.71 | 9.68 | 9.72 | 9.64 | 9.88 | 9.76 | 9.74 | 9.83 |
| 802.11n | *5620* | *124* | 9.54 | 9.53 | 9.66 | 9.64 | 9.65 | 9.69 | 9.67 | 9.68 |
| 802.11n | 5640 | 128 | 9.41 | 9.46 | 9.48 | 9.54 | 9.44 | 9.62 | 9.58 | 9.57 |
| 802.11n | 5660 | 132 | 9.32 | 9.38 | 9.46 | 9.36 | 9.34 | 9.56 | 9.40 | 9.44 |
| 802.11n | *5680* | *136* | 9.26 | 9.23 | 9.22 | 9.27 | 9.33 | 9.36 | 9.37 | 9.44 |
| 802.11n | 5700 | 140 | 9.14 | 9.21 | 9.26 | 9.29 | 9.25 | 9.32 | 9.22 | 9.27 |
| 802.11n | *5745* | *149* | 11.99 | 11.92 | 11.98 | 12.03 | 12.11 | 12.12 | 12.08 | 12.06 |
| 802.11n | 5765 | 153 | 11.96 | 11.93 | 11.98 | 11.97 | 11.95 | 12.00 | 12.01 | 12.14 |
| 802.11n | *5785* | *157* | 11.89 | 11.96 | 11.95 | 11.98 | 12.01 | 12.03 | 12.00 | 12.04 |
| 802.11n | *5805* | *161* | 11.88 | 11.87 | 11.90 | 11.89 | 12.02 | 11.93 | 11.86 | 11.83 |
| 802.11n | 5825 | 165 | 12.25 | 12.30 | 12.34 | 12.33 | 12.38 | 12.41 | 12.43 | 12.31 |

Justification for reduced test configurations for WIFI channels per KDB Publication 248227 and April 2010 FCC/TCB Meeting Notes:

- For 2.4 GHz WLAN, Highest average RF output power channel for the lowest data rate were selected for SAR evaluation. Other IEEE 802.11 modes (including 802.11g/n) were not investigated since the average output powers were not greater than 0.25 dB than that of the corresponding channel in the lowest data rate IEEE 802.11b mode.
- For 5 GHz WLAN, Highest average RF output power channel for the lowest data rate were selected for SAR evaluation. Other IEEE 802.11 modes (including 802.11n) were not investigated since the average output powers were not greater than 0.25 dB than that of the corresponding channel in the lowest data rate IEEE 802.11a mode.
- The bolded configurations were tested for SAR.

**Figure 12-1**
**Power Measurement Setup**


© 2011 PCTEST Engineering Laboratory, Inc.

# 13 FCC PERSONAL WIRELESS ROUTER CONFIGURATIONS

## 13.1 Personal Wireless Router Considerations

Some battery-operated handsets have the capability to transmit and receive internet connectivity through simultaneous transmission of WIFI in conjunction with a separate licensed transmitter. The FCC has provided guidance in KDB Publication 941225 D06 where SAR test considerations for a phone greater than 9cm x 5 cm are based on a composite test separation distance of 10 mm from the edges, front and back of the device with antennas 2.5 cm or closer to the edge of the device, determined from general mixed use conditions for this type of devices. Since the hotspot SAR results may overlap with the body-worn accessory SAR requirements, the more conservative configurations can be considered, thus excluding some body-worn accessory SAR tests.

## 13.2 SAR Test Setup for Personal Wireless Router Features

When the user enables the personal wireless router functions for the handset, actual operations include simultaneous transmission of both the WIFI transmitter and another licensed transmitter. Both transmitters often do not transmit at the same transmitting frequency and thus cannot be evaluated for SAR under actual use conditions. Therefore, SAR must be evaluated for each frequency transmission and mode separately and summed with the WIFI transmitter according to KDB 648474 publication procedures. Therefore, the measurements were performed for each standalone transmitter for the required exposure conditions. The “Portable Hotspot” feature on the handset was NOT activated, to ensure the SAR measurements were valid within a single transmission frequency.

## 13.3 Power Reduction for Portable Hotspot Mode

This model does not support any power reduction for portable hotspot mode.


© 2011 PCTEST Engineering Laboratory, Inc.

## 13.4 SAR Test Configurations

**Table 13-1**
**Mobile Hotspot Sides for SAR Testing**

| Mobile Hotspot Sides for SAR Testing | | | | | | |
|---|---|---|---|---|---|---|
| Mode | Back | Front | Top | Bottom | Right | Left |
| GPRS 850 | Yes | Yes | No | Yes | Yes | No |
| GPRS 1900 | Yes | Yes | No | Yes | Yes | No |
| WCDMA 850 | Yes | Yes | No | Yes | Yes | No |
| WCDMA 1900 | Yes | Yes | No | Yes | Yes | No |
| 2.4 GHz WLAN | Yes | Yes | No | Yes | No | Yes |

When hotspot is enabled, all 5 GHz Bands are disabled.

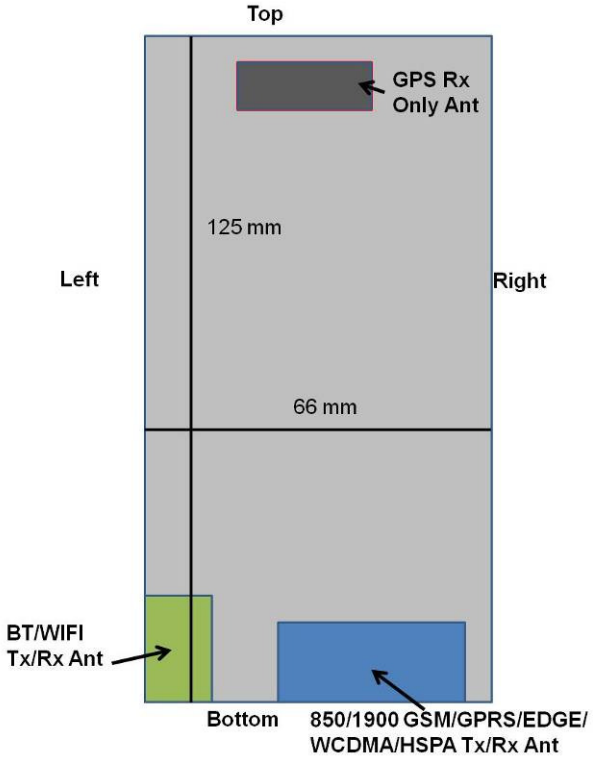


**Figure 13-1 Identification of Sides for SAR Testing (Front View)**

Note: Per FCC KDB Publication 941225 D06, the edges with antennas within 2.5 cm are required to be evaluated for SAR. The antenna document contains the measured distances between the antennas and the device edges.


© 2011 PCTEST Engineering Laboratory, Inc.

# 14 SYSTEM VERIFICATION

## 14.1 Tissue Verification

**Table 14-1**
**Measured Tissue Properties**

| Calibrated for Tests Performed on: | Tissue Type | Measured Frequency (MHz) | Measured Conductivity, σ (S/m) | Measured Dielectric Constant, ε | TARGET Conductivity, σ (S/m) | TARGET Dielectric Constant, ε | % dev σ | % dev ε |
|---|---|---|---|---|---|---|---|---|
| 07/25/2011 | 835H | 820 | 0.856 | 40.28 | 0.898 | 41.571 | -4.68% | -3.11% |
| | | 835 | 0.859 | 40.38 | 0.900 | 41.500 | -4.56% | -2.70% |
| | | 850 | 0.871 | 39.86 | 0.916 | 41.500 | -4.91% | -3.95% |
| 07/25/2011 | 835B | 820 | 0.974 | 54.95 | 0.969 | 55.284 | 0.52% | -0.60% |
| | | 835 | 0.986 | 54.92 | 0.970 | 55.200 | 1.65% | -0.51% |
| | | 850 | 0.999 | 54.83 | 0.988 | 55.154 | 1.11% | -0.59% |
| 07/26/2011 | 1900H | 1850 | 1.397 | 41.39 | 1.400 | 40.000 | -0.21% | 3.48% |
| | | 1880 | 1.444 | 41.48 | 1.400 | 40.000 | 3.14% | 3.70% |
| | | 1910 | 1.453 | 41.42 | 1.400 | 40.000 | 3.79% | 3.55% |
| 07/25/2011 | 1900B | 1850 | 1.463 | 53.14 | 1.520 | 53.300 | -3.75% | -0.30% |
| | | 1880 | 1.496 | 53.15 | 1.520 | 53.300 | -1.58% | -0.28% |
| | | 1910 | 1.526 | 53.26 | 1.520 | 53.300 | 0.39% | -0.08% |
| 07/26/2011 | 2450H | 2401 | 1.727 | 39.11 | 1.758 | 39.298 | -1.76% | -0.48% |
| | | 2450 | 1.780 | 38.86 | 1.800 | 39.200 | -1.11% | -0.87% |
| | | 2499 | 1.846 | 38.73 | 1.852 | 39.135 | -0.32% | -1.03% |
| 07/26/2011 | 2450B | 2401 | 1.865 | 52.19 | 1.903 | 52.765 | -2.00% | -1.09% |
| | | 2450 | 1.933 | 52.07 | 1.950 | 52.700 | -0.87% | -1.20% |
| | | 2499 | 2.004 | 51.85 | 2.019 | 52.638 | -0.74% | -1.50% |
| 07/27/2011 | 5200H-5800H | 5170 | 4.789 | 35.31 | 4.629 | 36.030 | 3.46% | -2.00% |
| | | 5210 | 4.808 | 35.26 | 4.670 | 35.990 | 2.96% | -2.03% |
| | | 5250 | 4.883 | 35.16 | 4.710 | 35.950 | 3.67% | -2.20% |
| | | 5270 | 4.879 | 35.20 | 4.730 | 35.930 | 4.38% | -2.03% |
| | | 5310 | 4.937 | 35.12 | 4.770 | 35.890 | 4.36% | -2.15% |
| | | 5350 | 4.978 | 34.99 | 4.810 | 35.850 | 3.49% | -2.40% |
| | | 5470 | 5.114 | 34.75 | 4.934 | 35.695 | 3.65% | -2.65% |
| | | 5510 | 5.160 | 34.75 | 4.976 | 35.635 | 3.70% | -2.48% |
| | | 5550 | 5.216 | 34.71 | 5.018 | 35.575 | 3.95% | -2.43% |
| | | 5570 | 5.236 | 34.63 | 5.039 | 35.545 | 3.91% | -2.57% |
| | | 5610 | 5.287 | 34.49 | 5.080 | 35.490 | 4.07% | -2.82% |
| | | 5650 | 5.329 | 34.52 | 5.120 | 35.450 | 4.08% | -2.62% |
| | | 5670 | 5.352 | 34.50 | 5.140 | 35.430 | 4.12% | -2.62% |
| | | 5710 | 5.390 | 34.48 | 5.180 | 35.390 | 4.05% | -2.57% |
| | | 5750 | 5.415 | 34.28 | 5.220 | 35.350 | 3.74% | -3.03% |
| | | 5770 | 5.459 | 34.25 | 5.240 | 35.330 | 4.18% | -3.06% |
| | | 5810 | 5.537 | 34.18 | 5.281 | 35.290 | 4.85% | -3.15% |
| | | 5850 | 5.567 | 34.12 | 5.323 | 35.250 | 4.58% | -3.21% |
| 07/28/2011 | 5200B-5800B | 5170 | 5.293 | 47.88 | 5.264 | 49.055 | 0.55% | -2.40% |
| | | 5210 | 5.315 | 47.88 | 5.311 | 49.001 | 0.08% | -2.29% |
| | | 5250 | 5.395 | 47.80 | 5.358 | 48.946 | 0.69% | -2.34% |
| | | 5270 | 5.404 | 47.58 | 5.381 | 48.919 | 0.43% | -2.74% |
| | | 5310 | 5.429 | 47.66 | 5.428 | 48.865 | 0.02% | -2.47% |
| | | 5350 | 5.537 | 47.61 | 5.470 | 48.811 | 1.22% | -2.46% |
| | | 5470 | 5.701 | 47.44 | 5.615 | 48.648 | 1.53% | -2.48% |
| | | 5510 | 5.728 | 47.30 | 5.661 | 48.594 | 1.18% | -2.66% |
| | | 5550 | 5.798 | 47.30 | 5.708 | 48.539 | 1.58% | -2.55% |
| | | 5570 | 5.822 | 47.32 | 5.731 | 48.512 | 1.59% | -2.46% |
| | | 5610 | 5.840 | 47.10 | 5.778 | 48.458 | 1.07% | -2.80% |
| | | 5650 | 5.922 | 47.05 | 5.825 | 48.404 | 1.67% | -2.80% |
| | | 5670 | 5.930 | 47.05 | 5.848 | 48.376 | 1.40% | -2.74% |
| | | 5710 | 5.984 | 47.07 | 5.895 | 48.322 | 1.51% | -2.59% |
| | | 5750 | 6.061 | 46.96 | 5.942 | 48.268 | 2.00% | -2.71% |
| | | 5770 | 6.109 | 46.76 | 5.965 | 48.241 | 2.41% | -3.07% |
| | | 5810 | 6.162 | 46.89 | 6.012 | 48.186 | 2.50% | -2.69% |
| | | 5850 | 6.206 | 46.86 | 6.058 | 48.132 | 2.44% | -2.64% |


© 2011 PCTEST Engineering Laboratory, Inc.

Note: KDB Publication 450824 was ensured to be applied for probe calibration frequencies greater than or equal to 50 MHz of the DUT frequencies.

The above measured tissue parameters were used in the DASY software to perform interpolation via the DASY software to determine actual dielectric parameters at the test frequencies (per IEEE 1528 6.6.1.2). The SAR test plots may slightly differ from the table above since the DASY software rounds to three significant digits.

Probe calibration used within ±100 MHz of the test frequency in either 5.725 - 5.85 or 5.47-5.725 GHz is acceptable per KDB Publication 865664 since the design of the SAR probe supports the extended frequency, provided the DASY software version recommended is used for the tests, and the expanded calibration uncertainty (k=2) is less than or equal to 15% (See SAR probe calibration certificate for this information). The dielectric and conductivities measured are within 10% and 5% respectively of the target parameters specified in Supplement C 01-01.

The above measured tissue parameters were used in the DASY software to perform interpolation via the DASY software to determine actual dielectric parameters at the test frequencies (per IEEE 1528 6.6.1.2). The SAR test plots may slightly differ from the table above since the DASY software rounds to three significant digits.

## 14.2 Measurement Procedure for Tissue verification

1) The network analyzer and probe system was configured and calibrated.
2) The probe was immersed in the sample which was placed in a nonmetallic container. Trapped air bubbles beneath the flange were minimized by placing the probe at a slight angle.
3) The complex admittance with respect to the probe aperture was measured
4) The complex relative permittivity , for example from the below equation (Pournaropoulos and Misra):

$$Y = \frac{j2\omega\varepsilon_r\varepsilon_0}{[\ln(b/a)]^2}\int_a^b\int_a^b\int_0^\pi \cos\phi' \frac{\exp\left[-j\omega r(\mu_0\varepsilon_r^{'}\varepsilon_0)^{1/2}\right]}{r} d\phi' d\rho' d\rho$$

where $Y$ is the admittance of the probe in contact with the sample, the primed and unprimed coordinates refer to source and observation points, respectively, $r^2 = \rho^2 + \rho'^2 - 2\rho\rho'\cos\phi'$ , $\omega$ is the angular frequency, and $j = \sqrt{-1}$ .


© 2011 PCTEST Engineering Laboratory, Inc.

## 14.3 Test System Verification

Prior to assessment, the system is verified to ±10% of the manufacturer SAR measurement on the reference dipole at the time of calibration.

**Table 14-2**
**System Verification Results**

| System Verification TARGET & MEASURED | | | | | | | | | | |
|---|---|---|---|---|---|---|---|---|---|---|
| Date: | Amb. Temp (°C) | Liquid Temp (°C) | Input Power (W) | Tissue Frequency (MHz) | Dipole SN | Tissue Type | Measured $SAR_{1g}$ (W/kg) | 1 W Target $SAR_{1g}$ (W/kg) | 1 W Normalized $SAR_{1g}$ (W/kg) | Deviation (%) |
| 07/25/2011 | 23.6 | 21.8 | 0.063 | 835 | 4d047 | Head | 0.609 | 9.530 | 9.6667 | 1.43% |
| 07/25/2011 | 24.0 | 22.2 | 0.063 | 835 | 4d047 | Body | 0.649 | 9.850 | 10.3016 | 4.58% |
| 07/26/2011 | 23.8 | 21.9 | 0.100 | 1900 | 502 | Head | 4.16 | 40.200 | 41.600 | 3.48% |
| 07/25/2011 | 23.7 | 21.8 | 0.100 | 1900 | 502 | Body | 4.04 | 41.100 | 40.400 | -1.70% |
| 07/26/2011 | 23.6 | 23.5 | 0.025 | 2450 | 797 | Head | 1.29 | 53.300 | 51.600 | -3.19% |
| 07/26/2011 | 23.2 | 21.7 | 0.025 | 2450 | 797 | Body | 1.3 | 52.300 | 52.000 | -0.57% |
| 07/27/2011 | 22.3 | 20.4 | 0.025 | 5200 | 1057 | Head | 2.24 | 83.100 | 89.600 | 7.82% |
| 07/28/2011 | 22.2 | 20.5 | 0.100 | 5200 | 1057 | Body | 8.11 | 77.700 | 81.100 | 4.38% |
| 07/27/2011 | 22.3 | 20.4 | 0.100 | 5500 | 1057 | Head | 9.76 | 90.100 | 97.600 | 8.32% |
| 07/28/2011 | 22.3 | 20.7 | 0.100 | 5500 | 1057 | Body | 7.9 | 84.400 | 79.000 | -6.40% |
| 07/27/2011 | 22.6 | 20.8 | 0.100 | 5800 | 1057 | Head | 9.04 | 82.900 | 90.400 | 9.05% |
| 07/28/2011 | 22.7 | 20.9 | 0.100 | 5800 | 1057 | Body | 7.72 | 75.000 | 77.200 | 2.93% |

Note: Per KDB Publication 865664, when a reference dipole is not defined within ±100MHz of the test frequency, the system verification may be conducted within ± 200 MHz of the center frequency of the measurement frequencies if the SAR probe calibration is valid and the same tissue-equivalent matter is used for verification and test measurements.

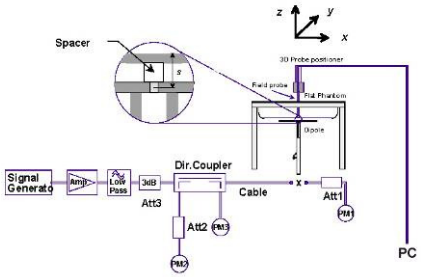


**Figure 14-1**
**System Verification Setup Diagram**

**Figure 14-2**
**System Verification Setup Photo**


© 2011 PCTEST Engineering Laboratory, Inc.

# 15 SAR DATA SUMMARY

**Table 15-1**
**GSM 850 Head SAR Results**

| MEASUREMENT RESULTS | | | | | | | | |
|---|---|---|---|---|---|---|---|---|
| FREQUENCY | | Mode/Band | Conducted Power [dBm] | Power Drift [dB] | Side | Test Position | Serial Number | SAR (1g) |
| MHz | Ch. | | | | | | | (W/kg) |
| 836.60 | 190 | GSM 850 | 32.45 | 0.03 | Right | Touch | FI-167-A | 0.117 |
| 836.60 | 190 | GSM 850 | 32.45 | -0.03 | Right | Tilt | FI-167-A | 0.080 |
| 836.60 | 190 | GSM 850 | 32.45 | 0.07 | Left | Touch | FI-167-A | 0.096 |
| 836.60 | 190 | GSM 850 | 32.45 | 0.03 | Left | Tilt | FI-167-A | 0.067 |
| **ANSI / IEEE C95.1 1992 - SAFETY LIMIT<br>Spatial Peak<br>Uncontrolled Exposure/General Population** | | | | | **Head<br>1.6 W/kg (mW/g)**<br>averaged over 1 gram | | | |

Notes:

1. The test data reported are the worst-case SAR value with the position set in a typical configuration. Test procedures used were according to FCC/OET Bulletin 65, Supplement C [June 2001].
2. All modes of operation were investigated, and worst-case results are reported.
3. Batteries are fully charged for all readings. Standard battery was used.
4. Tissue parameters and temperatures are listed on the SAR plots.
5. Liquid tissue depth was at least 15.0 cm.
6. Justification for reduced test configurations: Per FCC/OET Bulletin 65 Supplement C (June 2001) and Public Notice DA-02-1438, if the SAR measured at the middle channel for each test configuration (left, right, cheek/touch, tilt/ear, extended and retracted) is at least 3.0 dB lower than the SAR limit, testing at the high and low channels is optional for such test configuration(s).
7. All samples tested were electrically identical per the applicant.
8. The standard battery contains a near field communications (NFC) antenna, and is the only battery cover that comes with the device. All tests were performed using the standard NFC battery. The technical description contains detailed information about the NFC antenna. As described in Operational Description, the device does not allow any other battery other than model: ICP514657M.


© 2011 PCTEST Engineering Laboratory, Inc.

**Table 15-2**
**GSM 1900 Head SAR Results**

| MEASUREMENT RESULTS | | | | | | | | |
|---|---|---|---|---|---|---|---|---|
| FREQUENCY | | Mode/Band | Conducted Power [dBm] | Power Drift [dB] | Side | Test Position | Serial Number | SAR (1g) |
| MHz | Ch. | | | | | | | (W/kg) |
| 1880.00 | 661 | GSM 1900 | 29.41 | 0.04 | Right | Touch | FI-167-A | 0.145 |
| 1880.00 | 661 | GSM 1900 | 29.41 | 0.04 | Right | Tilt | FI-167-A | 0.030 |
| 1880.00 | 661 | GSM 1900 | 29.41 | -0.09 | Left | Touch | FI-167-A | 0.209 |
| 1880.00 | 661 | GSM 1900 | 29.41 | 0.02 | Left | Tilt | FI-167-A | 0.046 |
| **ANSI / IEEE C95.1 1992 - SAFETY LIMIT Spatial Peak Uncontrolled Exposure/General Population** | | | | | **Head 1.6 W/kg (mW/g)** averaged over 1 gram | | | |

Notes:

1. The test data reported are the worst-case SAR value with the position set in a typical configuration. Test procedures used were according to FCC/OET Bulletin 65, Supplement C [June 2001].
2. All modes of operation were investigated, and worst-case results are reported.
3. Batteries are fully charged for all readings. Standard battery was used.
4. Tissue parameters and temperatures are listed on the SAR plots.
5. Liquid tissue depth was at least 15.0 cm.
6. Justification for reduced test configurations: Per FCC/OET Bulletin 65 Supplement C (June 2001) and Public Notice DA-02-1438, if the SAR measured at the middle channel for each test configuration (left, right, cheek/touch, tilt/ear, extended and retracted) is at least 3.0 dB lower than the SAR limit, testing at the high and low channels is optional for such test configuration(s).
7. All samples tested were electrically identical per the applicant.
8. The standard battery contains a near field communications (NFC) antenna, and is the only battery cover that comes with the device. All tests were performed using the standard NFC battery. The technical description contains detailed information about the NFC antenna. As described in Operational Description, the device does not allow any other battery other than model: ICP514657M.


© 2011 PCTEST Engineering Laboratory, Inc.

**Table 15-3**
**WCDMA 850 Head SAR Results**

| MEASUREMENT RESULTS | | | | | | | | |
|---|---|---|---|---|---|---|---|---|
| FREQUENCY | | Mode/Band | Conducted Power [dBm] | Power Drift [dB] | Side | Test Position | Serial Number | SAR (1g) |
| MHz | Ch. | | | | | | | (W/kg) |
| 836.60 | 4183 | WCDMA 850 | 22.37 | -0.02 | Right | Touch | FI-167-A | **0.108** |
| 836.60 | 4183 | WCDMA 850 | 22.37 | 0.02 | Right | Tilt | FI-167-A | 0.071 |
| 836.60 | 4183 | WCDMA 850 | 22.37 | 0.08 | Left | Touch | FI-167-A | 0.090 |
| 836.60 | 4183 | WCDMA 850 | 22.37 | 0.06 | Left | Tilt | FI-167-A | 0.062 |
| **ANSI / IEEE C95.1 1992 - SAFETY LIMIT Spatial Peak Uncontrolled Exposure/General Population** | | | | | **Head 1.6 W/kg (mW/g)** averaged over 1 gram | | | |

Notes:

1. The test data reported are the worst-case SAR value with the position set in a typical configuration. Test procedures used were according to FCC/OET Bulletin 65, Supplement C [June 2001].
2. All modes of operation were investigated, and worst-case results are reported.
3. Batteries are fully charged for all readings. Standard battery was used.
4. Tissue parameters and temperatures are listed on the SAR plots.
5. Liquid tissue depth was at least 15.0 cm.
6. Justification for reduced test configurations: Per FCC/OET Bulletin 65 Supplement C (June 2001) and Public Notice DA-02-1438, if the SAR measured at the middle channel for each test configuration (left, right, cheek/touch, tilt/ear, extended and retracted) is at least 3.0 dB lower than the SAR limit, testing at the high and low channels is optional for such test configuration(s).
7. WCDMA mode was tested under RMC 12.2 kbps with HSPA Inactive per KDB Publication 941225 D01.
8. All samples tested were electrically identical per the applicant.
9. The standard battery contains a near field communications (NFC) antenna, and is the only battery cover that comes with the device. All tests were performed using the standard NFC battery. The technical description contains detailed information about the NFC antenna. As described in Operational Description, the device does not allow any other battery other than model: ICP514657M.


© 2011 PCTEST Engineering Laboratory, Inc.

**Table 15-4**
**WCDMA 1900 Head SAR Results**

| MEASUREMENT RESULTS | | | | | | | | |
|---|---|---|---|---|---|---|---|---|
| FREQUENCY | | Mode | Conducted Power [dBm] | Power Drift [dB] | Side | Test Position | Serial Number | SAR (1g) |
| MHz | Ch. | | | | | | | (W/kg) |
| 1880.00 | 9400 | WCDMA 1900 | 22.83 | -0.01 | Right | Touch | FI-167-A | 0.255 |
| 1880.00 | 9400 | WCDMA 1900 | 22.83 | 0.02 | Right | Tilt | FI-167-A | 0.056 |
| 1880.00 | 9400 | WCDMA 1900 | 22.83 | -0.06 | Left | Touch | FI-167-A | 0.366 |
| 1880.00 | 9400 | WCDMA 1900 | 22.83 | 0.02 | Left | Tilt | FI-167-A | 0.090 |
| **ANSI / IEEE C95.1 1992 - SAFETY LIMIT**<br>**Spatial Peak**<br>**Uncontrolled Exposure/General Population** | | | | | **Head**<br>**1.6 W/kg (mW/g)**<br>averaged over 1 gram | | | |

Notes:

1. The test data reported are the worst-case SAR value with the position set in a typical configuration. Test procedures used were according to FCC/OET Bulletin 65, Supplement C [June 2001].
2. All modes of operation were investigated, and worst-case results are reported.
3. Batteries are fully charged for all readings. Standard battery was used.
4. Tissue parameters and temperatures are listed on the SAR plots.
5. Liquid tissue depth was at least 15.0 cm.
6. Justification for reduced test configurations: Per FCC/OET Bulletin 65 Supplement C (June 2001) and Public Notice DA-02-1438, if the SAR measured at the middle channel for each test configuration (left, right, cheek/touch, tilt/ear, extended and retracted) is at least 3.0 dB lower than the SAR limit, testing at the high and low channels is optional for such test configuration(s).
7. WCDMA mode was tested under RMC 12.2 kbps with HSPA Inactive per KDB Publication 941225 D01.
8. All samples tested were electrically identical per the applicant.
9. The standard battery contains a near field communications (NFC) antenna, and is the only battery cover that comes with the device. All tests were performed using the standard NFC battery. The technical description contains detailed information about the NFC antenna. As described in Operational Description, the device does not allow any other battery other than model: ICP514657M.


© 2011 PCTEST Engineering Laboratory, Inc.

## Table 15-5
## 2.4 GHz WLAN Head SAR Results

| MEASUREMENT RESULTS | | | | | | | | | | |
|---|---|---|---|---|---|---|---|---|---|---|
| FREQUENCY | | Mode | Service | Conducted Power [dBm] | Power Drift [dB] | Side | Test Position | Serial Number | Data Rate (Mbps) | SAR (1g) |
| MHz | Ch. | | | | | | | | | (W/kg) |
| 2437 | 6 | IEEE 802.11b | DSSS | 17.61 | 0.08 | Right | Touch | FI-167-A | 1 | 0.055 |
| 2437 | 6 | IEEE 802.11b | DSSS | 17.61 | 0.09 | Right | Tilt | FI-167-A | 1 | 0.042 |
| 2437 | 6 | IEEE 802.11b | DSSS | 17.61 | 0.06 | Left | Touch | FI-167-A | 1 | 0.098 |
| 2437 | 6 | IEEE 802.11b | DSSS | 17.61 | 0.00 | Left | Tilt | FI-167-A | 1 | 0.021 |
| **ANSI / IEEE C95.1 1992 - SAFETY LIMIT<br>Spatial Peak<br>Uncontrolled Exposure/General Population** | | | | | | **Head<br>1.6 W/kg (mW/g)**<br>averaged over 1 gram | | | | |

Notes:

1. The test data reported are the worst-case SAR value with the position set in a typical configuration. Test procedures used were according to FCC/OET Bulletin 65, Supplement C [June 2001].
2. All modes of operation were investigated, and worst-case results are reported.
3. Batteries are fully charged for all readings. Standard battery was used.
4. Tissue parameters and temperatures are listed on the SAR plots.
5. Liquid tissue depth was at least 15.0 cm.
6. Justification for reduced test configurations for WIFI channels per KDB Publication 248227 and April 2010 FCC/TCB Meeting Notes: Highest average RF output power channel for the lowest data rate were selected for SAR evaluation. Other IEEE 802.11 modes (including 802.11g/n) were not investigated since the average output powers were not greater than 0.25 dB than that of the corresponding channel in the lowest data rate IEEE 802.11b mode.
7. WLAN transmission was verified using a spectrum analyzer.
8. All samples tested were electrically identical per the applicant.
9. The standard battery contains a near field communications (NFC) antenna, and is the only battery cover that comes with the device. All tests were performed using the standard NFC battery. The technical description contains detailed information about the NFC antenna. As described in Operational Description, the device does not allow any other battery other than model: ICP514657M.


© 2011 PCTEST Engineering Laboratory, Inc.

**Table 15-6**
**5.2 GHz WLAN Head SAR Results**

| MEASUREMENT RESULTS | | | | | | | | | | |
|---|---|---|---|---|---|---|---|---|---|---|
| FREQUENCY | | Mode | Service | Conducted Power [dBm] | Power Drift [dB] | Side | Test Position | Serial Number | Data Rate (Mbps) | SAR (1g) |
| MHz | Ch. | | | | | | | | | (W/kg) |
| 5240 | 48 | IEEE 802.11a | OFDM | 11.65 | 0.09 | Right | Touch | FI-167-C | 6 | 0.056 |
| 5240 | 48 | IEEE 802.11a | OFDM | 11.65 | 0.06 | Right | Tilt | FI-167-C | 6 | 0.025 |
| 5240 | 48 | IEEE 802.11a | OFDM | 11.65 | 0.07 | Left | Touch | FI-167-C | 6 | 0.073 |
| 5240 | 48 | IEEE 802.11a | OFDM | 11.65 | 0.10 | Left | Tilt | FI-167-C | 6 | 0.008 |
| **ANSI / IEEE C95.1 1992 - SAFETY LIMIT<br>Spatial Peak<br>Uncontrolled Exposure/General Population** | | | | | | **Head<br>1.6 W/kg (mW/g)**<br>averaged over 1 gram | | | | |

Notes:

1. The test data reported are the worst-case SAR value with the position set in a typical configuration. Test procedures used were according to FCC/OET Bulletin 65, Supplement C [June 2001].
2. All modes of operation were investigated, and worst-case results are reported.
3. Batteries are fully charged for all readings. Standard battery was used.
4. Tissue parameters and temperatures are listed on the SAR plots.
5. Liquid tissue depth was at least 15.0 cm.
6. Justification for reduced test configurations for WIFI channels per KDB Publication 248227 and April 2010 FCC/TCB Meeting Notes: Highest average RF output power channel for the lowest data rate were selected for SAR evaluation. Other IEEE 802.11 modes (including 802.11n) were not investigated since the average output powers were not greater than 0.25 dB than that of the corresponding channel in the lowest data rate IEEE 802.11a mode.
7. WLAN transmission was verified using a spectrum analyzer.
8. All samples tested were electrically identical per the applicant.
9. The standard battery contains a near field communications (NFC) antenna, and is the only battery cover that comes with the device. All tests were performed using the standard NFC battery. The technical description contains detailed information about the NFC antenna. As described in Operational Description, the device does not allow any other battery other than model: ICP514657M.


© 2011 PCTEST Engineering Laboratory, Inc.

**Table 15-7**
**5.3 GHz WLAN Head SAR Results**

| MEASUREMENT RESULTS | | | | | | | | | | |
|---|---|---|---|---|---|---|---|---|---|---|
| FREQUENCY | | Mode | Service | Conducted Power [dBm] | Power Drift [dB] | Side | Test Position | Serial Number | Data Rate (Mbps) | SAR (1g) |
| MHz | Ch. | | | | | | | | | (W/kg) |
| 5280 | 56 | IEEE 802.11a | OFDM | 11.67 | -0.05 | Right | Touch | FI-167-C | 6 | 0.068 |
| 5280 | 56 | IEEE 802.11a | OFDM | 11.67 | 0.07 | Right | Tilt | FI-167-C | 6 | 0.023 |
| 5280 | 56 | IEEE 802.11a | OFDM | 11.67 | 0.09 | Left | Touch | FI-167-C | 6 | 0.090 |
| 5280 | 56 | IEEE 802.11a | OFDM | 11.67 | -0.06 | Left | Tilt | FI-167-C | 6 | 0.057 |
| **ANSI / IEEE C95.1 1992 - SAFETY LIMIT<br>Spatial Peak<br>Uncontrolled Exposure/General Population** | | | | | | **Head<br>1.6 W/kg (mW/g)**<br>averaged over 1 gram | | | | |

Notes:

1. The test data reported are the worst-case SAR value with the position set in a typical configuration. Test procedures used were according to FCC/OET Bulletin 65, Supplement C [June 2001].
2. All modes of operation were investigated, and worst-case results are reported.
3. Batteries are fully charged for all readings. Standard battery was used.
4. Tissue parameters and temperatures are listed on the SAR plots.
5. Liquid tissue depth was at least 15.0 cm.
6. Justification for reduced test configurations for WIFI channels per KDB Publication 248227 and April 2010 FCC/TCB Meeting Notes: Highest average RF output power channel for the lowest data rate were selected for SAR evaluation. Other IEEE 802.11 modes (including 802.11n) were not investigated since the average output powers were not greater than 0.25 dB than that of the corresponding channel in the lowest data rate IEEE 802.11a mode.
7. WLAN transmission was verified using a spectrum analyzer.
8. All samples tested were electrically identical per the applicant.
9. The standard battery contains a near field communications (NFC) antenna, and is the only battery cover that comes with the device. All tests were performed using the standard NFC battery. The technical description contains detailed information about the NFC antenna. As described in Operational Description, the device does not allow any other battery other than model: ICP514657M.


© 2011 PCTEST Engineering Laboratory, Inc.

**Table 15-8**
**5.5 GHz WLAN Head SAR Results**

| MEASUREMENT RESULTS | | | | | | | | | | |
|---|---|---|---|---|---|---|---|---|---|---|
| FREQUENCY | | Mode | Service | Conducted Power [dBm] | Power Drift [dB] | Side | Test Position | Serial Number | Data Rate (Mbps) | SAR (1g) |
| MHz | Ch. | | | | | | | | | (W/kg) |
| 5500 | 100 | IEEE 802.11a | OFDM | 12.54 | -0.08 | Right | Touch | FI-167-C | 6 | 0.074 |
| 5500 | 100 | IEEE 802.11a | OFDM | 12.54 | 0.07 | Right | Tilt | FI-167-C | 6 | 0.028 |
| 5500 | 100 | IEEE 802.11a | OFDM | 12.54 | -0.07 | Left | Touch | FI-167-C | 6 | 0.080 |
| 5500 | 100 | IEEE 802.11a | OFDM | 12.54 | 0.08 | Left | Tilt | FI-167-C | 6 | 0.040 |
| **ANSI / IEEE C95.1 1992 - SAFETY LIMIT<br>Spatial Peak<br>Uncontrolled Exposure/General Population** | | | | | | **Head<br>1.6 W/kg (mW/g)**<br>averaged over 1 gram | | | | |

Notes:

1. The test data reported are the worst-case SAR value with the position set in a typical configuration. Test procedures used were according to FCC/OET Bulletin 65, Supplement C [June 2001].
2. All modes of operation were investigated, and worst-case results are reported.
3. Batteries are fully charged for all readings. Standard battery was used.
4. Tissue parameters and temperatures are listed on the SAR plots.
5. Liquid tissue depth was at least 15.0 cm.
6. Justification for reduced test configurations for WIFI channels per KDB Publication 248227 and April 2010 FCC/TCB Meeting Notes: Highest average RF output power channel for the lowest data rate were selected for SAR evaluation. Other IEEE 802.11 modes (including 802.11n) were not investigated since the average output powers were not greater than 0.25 dB than that of the corresponding channel in the lowest data rate IEEE 802.11a mode.
7. WLAN transmission was verified using a spectrum analyzer.
8. All samples tested were electrically identical per the applicant.
9. The standard battery contains a near field communications (NFC) antenna, and is the only battery cover that comes with the device. All tests were performed using the standard NFC battery. The technical description contains detailed information about the NFC antenna. As described in Operational Description, the device does not allow any other battery other than model: ICP514657M.


© 2011 PCTEST Engineering Laboratory, Inc.

**Table 15-9**
**5.8 GHz WLAN Head SAR Results**

| MEASUREMENT RESULTS | | | | | | | | | | |
|---|---|---|---|---|---|---|---|---|---|---|
| FREQUENCY | | Mode | Service | Conducted Power [dBm] | Power Drift [dB] | Side | Test Position | Serial Number | Data Rate (Mbps) | SAR (1g) |
| MHz | Ch. | | | | | | | | | (W/kg) |
| 5745 | 149 | IEEE 802.11a | OFDM | 12.37 | 0.06 | Right | Touch | FI-167-C | 6 | 0.098 |
| 5745 | 149 | IEEE 802.11a | OFDM | 12.37 | 0.09 | Right | Tilt | FI-167-C | 6 | 0.056 |
| 5745 | 149 | IEEE 802.11a | OFDM | 12.37 | -0.08 | Left | Touch | FI-167-C | 6 | 0.119 |
| 5745 | 149 | IEEE 802.11a | OFDM | 12.37 | 0.05 | Left | Tilt | FI-167-C | 6 | 0.084 |
| **ANSI / IEEE C95.1 1992 - SAFETY LIMIT<br>Spatial Peak<br>Uncontrolled Exposure/General Population** | | | | | | **Head<br>1.6 W/kg (mW/g)**<br>averaged over 1 gram | | | | |

Notes:

1. The test data reported are the worst-case SAR value with the position set in a typical configuration. Test procedures used were according to FCC/OET Bulletin 65, Supplement C [June 2001].
2. All modes of operation were investigated, and worst-case results are reported.
3. Batteries are fully charged for all readings. Standard battery was used.
4. Tissue parameters and temperatures are listed on the SAR plots.
5. Liquid tissue depth was at least 15.0 cm.
6. Justification for reduced test configurations for WIFI channels per KDB Publication 248227 and April 2010 FCC/TCB Meeting Notes: Highest average RF output power channel for the lowest data rate were selected for SAR evaluation. Other IEEE 802.11 modes (including 802.11n) were not investigated since the average output powers were not greater than 0.25 dB than that of the corresponding channel in the lowest data rate IEEE 802.11a mode.
7. WLAN transmission was verified using a spectrum analyzer.
8. All samples tested were electrically identical per the applicant.
9. The standard battery contains a near field communications (NFC) antenna, and is the only battery cover that comes with the device. All tests were performed using the standard NFC battery. The technical description contains detailed information about the NFC antenna. As described in Operational Description, the device does not allow any other battery other than model: ICP514657M.
10. To confirm the proper SAR liquid depth for 5 GHz head tests, the z-axis plots from the system verification performed with the same liquid that was tested for 5 GHz head SAR tests were included to confirm the liquid depth, since the measured SAR was low and could not be used to determine this requirement.


© 2011 PCTEST Engineering Laboratory, Inc.

## Table 15-10
## GSM Body-Worn Accessory SAR Results

| MEASUREMENT RESULTS | | | | | | | | | | |
|---|---|---|---|---|---|---|---|---|---|---|
| FREQUENCY | | Mode | Service | Conducted Power [dBm] | Power Drift [dB] | Spacing | Serial Number | # of GPRS Slots | Side | SAR (1g) |
| MHz | Ch. | | | | | | | | | (W/kg) |
| 836.60 | 190 | GSM 850 | GPRS | 30.53 | -0.01 | 1.0 cm | FI-167-A | 2 | back | 0.474 |
| 836.60 | 190 | GSM 850 | GPRS | 28.98 | 0.01 | 1.0 cm | FI-167-A | 3 | back | **0.495** |
| 836.60 | 190 | GSM 850 | GPRS | 27.49 | 0.00 | 1.0 cm | FI-167-A | 4 | back | 0.462 |
| 1850.20 | 512 | GSM 1900 | GPRS | 28.41 | -0.02 | 1.0 cm | FI-167-A | 2 | back | 0.875 |
| 1880.00 | 661 | GSM 1900 | GPRS | 28.47 | 0.01 | 1.0 cm | FI-167-A | 2 | back | 0.989 |
| 1909.80 | 810 | GSM 1900 | GPRS | 28.46 | 0.01 | 1.0 cm | FI-167-A | 2 | back | **1.070** |
| 1850.20 | 512 | GSM 1900 | GPRS | 26.62 | 0.02 | 1.0 cm | FI-167-A | 3 | back | 0.777 |
| 1880.00 | 661 | GSM 1900 | GPRS | 26.66 | 0.00 | 1.0 cm | FI-167-A | 3 | back | 0.940 |
| 1909.80 | 810 | GSM 1900 | GPRS | 26.63 | 0.00 | 1.0 cm | FI-167-A | 3 | back | 0.937 |
| 1850.20 | 512 | GSM 1900 | GPRS | 25.61 | 0.00 | 1.0 cm | FI-167-A | 4 | back | 0.824 |
| 1880.00 | 661 | GSM 1900 | GPRS | 25.67 | 0.06 | 1.0 cm | FI-167-A | 4 | back | 0.933 |
| 1909.80 | 810 | GSM 1900 | GPRS | 25.64 | -0.02 | 1.0 cm | FI-167-A | 4 | back | 1.000 |
| **ANSI / IEEE C95.1 1992 - SAFETY LIMIT<br>Spatial Peak<br>Uncontrolled Exposure/General Population** | | | | | | **Body<br>1.6 W/kg (mW/g)**<br>averaged over 1 gram | | | | |

Notes:

1. The test data reported are the worst-case SAR value with the position set in a typical configuration. Test procedures used were according to FCC/OET Bulletin 65, Supplement C [June 2001]
2. All modes of operation were investigated, and worst-case results are reported.
3. Tissue parameters and temperatures are listed on the SAR plots.
4. Batteries are fully charged for all readings. Standard battery was used.
5. Liquid tissue depth was at least 15.0 cm.
6. Device was tested using a fixed spacing. A separation distance of 10 mm is chosen because Grantee has determined that it supports the types of body-worn accessories available in the marketplace to users for this handset.
7. Justification for reduced test configurations per KDB Publication 941225 D03: The source-based time-averaged output power was evaluated for all multi-slot operations. In addition to the worst-case reported, all source-based time-averaged powers within 10% of the worst-case were additionally included in the evaluation.
8. Justification for reduced test configurations: Per FCC/OET Bulletin 65 Supplement C (June 2001) and Public Notice DA-02-1438, if the SAR measured at the middle channel for each test configuration is at least 3.0 dB lower than the SAR limit, testing at the high and low channels is optional for such test configuration(s).
9. All samples tested were electrically identical per the applicant.
10. The standard battery contains a near field communications (NFC) antenna, and is the only battery cover that comes with the device. All tests were performed using the standard NFC battery. The technical description contains detailed information about the NFC antenna. As described in Operational Description, the device does not allow any other battery other than model: ICP514657M.


© 2011 PCTEST Engineering Laboratory, Inc.

**Table 15-11**
**WCDMA Body-Worn Accessory SAR Results**

| MEASUREMENT RESULTS | | | | | | | | | |
|---|---|---|---|---|---|---|---|---|---|
| FREQUENCY | | Mode | Service | Conducted Power [dBm] | Power Drift [dB] | Spacing | Serial Number | Side | SAR (1g) |
| MHz | Ch. | | | | | | | | (W/kg) |
| 836.60 | 4183 | WCDMA 850 | RMC | 22.37 | 0.01 | 1.0 cm | FI-167-A | back | 0.363 |
| 1852.40 | 9262 | WCDMA 1900 | RMC | 22.89 | 0.01 | 1.0 cm | FI-167-A | back | 1.010 |
| 1880.00 | 9400 | WCDMA 1900 | RMC | 22.83 | -0.01 | 1.0 cm | FI-167-A | back | 1.080 |
| 1907.60 | 9538 | WCDMA 1900 | RMC | 22.81 | 0.00 | 1.0 cm | FI-167-A | back | 1.120 |
| **ANSI / IEEE C95.1 1992 - SAFETY LIMIT Spatial Peak Uncontrolled Exposure/General Population** | | | | | | **Body 1.6 W/kg (mW/g)** averaged over 1 gram | | | |

Notes:

1. The test data reported are the worst-case SAR value with the position set in a typical configuration. Test procedures used were according to FCC/OET Bulletin 65, Supplement C [June 2001]
2. All modes of operation were investigated, and worst-case results are reported.
3. Tissue parameters and temperatures are listed on the SAR plots.
4. Batteries are fully charged for all readings. Standard battery was used.
5. Liquid tissue depth was at least 15.0 cm.
6. Device was tested using a fixed spacing. A separation distance of 10 mm is chosen because Grantee has determined that it supports the types of body-worn accessories available in the marketplace to users for this handset.
7. WCDMA mode in Body SAR was tested under RMC 12.2 kbps with HSPA Inactive per KDB Publication 941225 D01. HSPA SAR tests were not required since the average output power of the HSPA subtests was not more than 0.25 dB higher than the RMC level and SAR was less than 1.2 W/kg.
8. Justification for reduced test configurations: Per FCC/OET Bulletin 65 Supplement C (June 2001) and Public Notice DA-02-1438, if the SAR measured at the middle channel for each test configuration is at least 3.0 dB lower than the SAR limit, testing at the high and low channels is optional for such test configuration(s).
9. All samples tested were electrically identical per the applicant.
10. The standard battery contains a near field communications (NFC) antenna, and is the only battery cover that comes with the device. All tests were performed using the standard NFC battery. The technical description contains detailed information about the NFC antenna. As described in Operational Description, the device does not allow any other battery other than model: ICP514657M.


© 2011 PCTEST Engineering Laboratory, Inc.

**Table 15-12**
**2.4 GHz Body-Worn Accessory SAR Results**

| MEASUREMENT RESULTS | | | | | | | | | | |
|---|---|---|---|---|---|---|---|---|---|---|
| FREQUENCY | | Mode | Service | Conducted Power [dBm] | Power Drift [dB] | Spacing | Serial Number | Data Rate (Mbps) | Side | SAR (1g) |
| MHz | Ch. | | | | | | | | | (W/kg) |
| 2437 | 6 | IEEE 802.11b | DSSS | 17.61 | 0.03 | 1.0 cm | FI-167-A | 1 | back | 0.085 |
| ANSI / IEEE C95.1 1992 - SAFETY LIMIT<br>Spatial Peak<br>Uncontrolled Exposure/General Population | | | | | | Body<br>1.6 W/kg (mW/g)<br>averaged over 1 gram | | | | |

Notes:

1. The test data reported are the worst-case SAR value with the position set in a typical configuration. Test procedures used were according to FCC/OET Bulletin 65, Supplement C [June 2001].
2. All modes of operation were investigated, and worst-case results are reported.
3. Batteries are fully charged for all readings. Standard battery was used.
4. Tissue parameters and temperatures are listed on the SAR plots.
5. Liquid tissue depth is was at least 15.0 cm.
6. Device was tested using a fixed spacing. A separation distance of 10 mm is chosen because Grantee has determined that it supports the types of body-worn accessories available in the marketplace to users for this handset.
7. Justification for reduced test configurations for WIFI channels per KDB Publication 248227 and April 2010 FCC/TCB Meeting Notes: Highest average RF output power channel for the lowest data rate were selected for SAR evaluation. Other IEEE 802.11 modes (including 802.11g/n) were not investigated since the average output powers were not greater than 0.25 dB than that of the corresponding channel in the lowest data rate IEEE 802.11b mode.
8. WLAN transmission was verified using a spectrum analyzer.
9. All samples tested were electrically identical per the applicant.
10. The standard battery contains a near field communications (NFC) antenna, and is the only battery cover that comes with the device. All tests were performed using the standard NFC battery. The technical description contains detailed information about the NFC antenna. As described in Operational Description, the device does not allow any other battery other than model: ICP514657M.


© 2011 PCTEST Engineering Laboratory, Inc.

**Table 15-13**
**5 GHz Body-Worn Accessory SAR Results**

| MEASUREMENT RESULTS | | | | | | | | | | |
|---|---|---|---|---|---|---|---|---|---|---|
| FREQUENCY | | Mode | Service | Conducted Power [dBm] | Power Drift [dB] | Spacing | Serial Number | Data Rate (Mbps) | Side | SAR (1g) |
| MHz | Ch. | | | | | | | | | (W/kg) |
| 5240 | 48 | IEEE 802.11a | OFDM | 11.65 | -0.05 | 1.0 cm | FI-167-C | 6 | back | 0.034 |
| 5280 | 56 | IEEE 802.11a | OFDM | 11.67 | 0.10 | 1.0 cm | FI-167-C | 6 | back | 0.046 |
| 5500 | 100 | IEEE 802.11a | OFDM | 12.54 | 0.08 | 1.0 cm | FI-167-C | 6 | back | 0.029 |
| 5745 | 149 | IEEE 802.11a | OFDM | 12.37 | 0.08 | 1.0 cm | FI-167-C | 6 | back | 0.029 |
| **ANSI / IEEE C95.1 1992 - SAFETY LIMIT<br>Spatial Peak<br>Uncontrolled Exposure/General Population** | | | | | | **Body<br>1.6 W/kg (mW/g)**<br>averaged over 1 gram | | | | |

Notes:

1. The test data reported are the worst-case SAR value with the position set in a typical configuration. Test procedures used were according to FCC/OET Bulletin 65, Supplement C [June 2001].
2. All modes of operation were investigated, and worst-case results are reported.
3. Batteries are fully charged for all readings. Standard battery was used.
4. Tissue parameters and temperatures are listed on the SAR plots.
5. Liquid tissue depth is was at least 15.0 cm.
6. Device was tested using a fixed spacing. A separation distance of 10 mm is chosen because Grantee has determined that it supports the types of body-worn accessories available in the marketplace to users for this handset.
7. Justification for reduced test configurations for WIFI channels per KDB Publication 248227 and April 2010 FCC/TCB Meeting Notes: Highest average RF output power channel for the lowest data rate were selected for SAR evaluation. Other IEEE 802.11 modes (including 802.11n) were not investigated since the average output powers were not greater than 0.25 dB than that of the corresponding channel in the lowest data rate IEEE 802.11a mode.
8. WLAN transmission was verified using a spectrum analyzer.
9. All samples tested were electrically identical per the applicant.
10. The standard battery contains a near field communications (NFC) antenna, and is the only battery cover that comes with the device. All tests were performed using the standard NFC battery. The technical description contains detailed information about the NFC antenna. As described in Operational Description, the device does not allow any other battery other than model: ICP514657M.
11. When hotspot is enabled, all 5 GHz bands are disabled.
12. To confirm the proper SAR liquid depth for 5 GHz Body tests, the z-axis plots from the system verification performed with the same liquid that was tested for 5 GHz body SAR tests were included to confirm the liquid depth, since the measured SAR was low and could not be used to determine this requirement.


© 2011 PCTEST Engineering Laboratory, Inc.

## Table 15-14
## GSM Hotspot Body SAR Results

| MEASUREMENT RESULTS | | | | | | | | | | |
|---|---|---|---|---|---|---|---|---|---|---|
| FREQUENCY | | Mode | Service | Conducted Power [dBm] | Power Drift [dB] | Spacing | Serial Number | # of GPRS Slots | Side | SAR (1g) |
| MHz | Ch. | | | | | | | | | (W/kg) |
| 836.60 | 190 | GSM 850 | GPRS | 30.53 | -0.01 | 1.0 cm | FI-167-A | 2 | back | 0.474 |
| 836.60 | 190 | GSM 850 | GPRS | 28.98 | 0.01 | 1.0 cm | FI-167-A | 3 | back | **0.495** |
| 836.60 | 190 | GSM 850 | GPRS | 27.49 | 0.00 | 1.0 cm | FI-167-A | 4 | back | 0.462 |
| 836.60 | 190 | GSM 850 | GPRS | 28.98 | 0.02 | 1.0 cm | FI-167-A | 3 | front | **0.235** |
| 836.60 | 190 | GSM 850 | GPRS | 28.98 | 0.05 | 1.0 cm | FI-167-A | 3 | bottom | **0.089** |
| 836.60 | 190 | GSM 850 | GPRS | 28.98 | -0.03 | 1.0 cm | FI-167-A | 3 | right | **0.367** |
| 1850.20 | 512 | GSM 1900 | GPRS | 28.41 | -0.02 | 1.0 cm | FI-167-A | 2 | back | 0.875 |
| 1880.00 | 661 | GSM 1900 | GPRS | 28.47 | 0.01 | 1.0 cm | FI-167-A | 2 | back | 0.989 |
| 1909.80 | 810 | GSM 1900 | GPRS | 28.46 | 0.01 | 1.0 cm | FI-167-A | 2 | back | **1.070** |
| 1850.20 | 512 | GSM 1900 | GPRS | 26.62 | 0.02 | 1.0 cm | FI-167-A | 3 | back | 0.777 |
| 1880.00 | 661 | GSM 1900 | GPRS | 26.66 | 0.00 | 1.0 cm | FI-167-A | 3 | back | 0.940 |
| 1909.80 | 810 | GSM 1900 | GPRS | 26.63 | 0.00 | 1.0 cm | FI-167-A | 3 | back | 0.937 |
| 1850.20 | 512 | GSM 1900 | GPRS | 25.61 | 0.00 | 1.0 cm | FI-167-A | 4 | back | 0.824 |
| 1880.00 | 661 | GSM 1900 | GPRS | 25.67 | 0.06 | 1.0 cm | FI-167-A | 4 | back | 0.933 |
| 1909.80 | 810 | GSM 1900 | GPRS | 25.64 | -0.02 | 1.0 cm | FI-167-A | 4 | back | 1.000 |
| 1880.00 | 661 | GSM 1900 | GPRS | 28.47 | 0.00 | 1.0 cm | FI-167-A | 2 | front | **0.442** |
| 1880.00 | 661 | GSM 1900 | GPRS | 28.47 | 0.01 | 1.0 cm | FI-167-A | 2 | bottom | **0.771** |
| 1880.00 | 661 | GSM 1900 | GPRS | 28.47 | 0.03 | 1.0 cm | FI-167-A | 2 | right | **0.283** |
| **ANSI / IEEE C95.1 1992 - SAFETY LIMIT<br>Spatial Peak<br>Uncontrolled Exposure/General Population** | | | | | | **Body<br>1.6 W/kg (mW/g)**<br>averaged over 1 gram | | | | |

Notes:

1. The test data reported are the worst-case SAR value with the position set in a typical configuration. Test procedures used were according to FCC/OET Bulletin 65, Supplement C [June 2001]
2. All modes of operation were investigated, and worst-case results are reported.
3. Tissue parameters and temperatures are listed on the SAR plots.
4. Batteries are fully charged for all readings. Standard battery was used.
5. Liquid tissue depth was at least 15.0 cm.
6. Device was tested using a fixed spacing.
7. Justification for reduced test configurations per KDB Publication 941225 D03: The source-based time-averaged output power was evaluated for all multi-slot operations. In addition to the worst-case reported, all source-based time-averaged powers within 10% of the worst-case were additionally included in the evaluation.
8. Justification for reduced test configurations: Per FCC/OET Bulletin 65 Supplement C (June 2001) and Public Notice DA-02-1438, if the SAR measured at the middle channel for each test configuration is at least 3.0 dB lower than the SAR limit, testing at the high and low channels is optional for such test configuration(s).
9. All samples tested were electrically identical per the applicant.
10. Top and left edges were not tested since the antenna distance from the edge is greater than 2.5 cm per FCC KDB Publication 941225 D06 guidance (see Section 13.4).
11. SAR evaluation requires a single frequency of measurement for valid measurements using the SAR probe and tissue calibrated which are calibrated for specific limited frequency ranges. Therefore, during SAR evaluation it was ensured that the WIFI transmission was disabled by the manufacturer to assess the standalone SAR to be evaluated for SAR. WIFI SAR was separately evaluated to account for the WIFI SAR for portable hotspot exposure conditions (See Section 13).
12. The standard battery contains a near field communications (NFC) antenna, and is the only battery cover that comes with the device. All tests were performed using the standard NFC battery. The technical description contains detailed information about the NFC antenna. As described in Operational Description, the device does not allow any other battery other than model: ICP514657M.
13. Per FCC KDB Publication 941225 D06, when the same wireless modes and device transmission configurations are required for body-worn accessories and hotspot mode, it is not necessary to additionally test body-worn accessory SAR for the same device orientation. Therefore, the hotspot data for the back side configuration additionally shows body-worn compliance.


© 2011 PCTEST Engineering Laboratory, Inc.

## Table 15-15
## WCDMA Hotspot Body SAR Results

| MEASUREMENT RESULTS | | | | | | | | | |
|---|---|---|---|---|---|---|---|---|---|
| FREQUENCY | | Mode | Service | Conducted Power [dBm] | Power Drift [dB] | Spacing | Serial Number | Side | SAR (1g) |
| MHz | Ch. | | | | | | | | (W/kg) |
| 836.60 | 4183 | WCDMA 850 | RMC | 22.37 | 0.01 | 1.0 cm | FI-167-A | back | 0.363 |
| 836.60 | 4183 | WCDMA 850 | RMC | 22.37 | 0.01 | 1.0 cm | FI-167-A | front | 0.156 |
| 836.60 | 4183 | WCDMA 850 | RMC | 22.37 | 0.05 | 1.0 cm | FI-167-A | bottom | 0.063 |
| 836.60 | 4183 | WCDMA 850 | RMC | 22.37 | 0.01 | 1.0 cm | FI-167-A | right | 0.281 |
| 1852.40 | 9262 | WCDMA 1900 | RMC | 22.89 | 0.01 | 1.0 cm | FI-167-A | back | 1.010 |
| 1880.00 | 9400 | WCDMA 1900 | RMC | 22.83 | -0.01 | 1.0 cm | FI-167-A | back | 1.080 |
| 1907.60 | 9538 | WCDMA 1900 | RMC | 22.81 | 0.00 | 1.0 cm | FI-167-A | back | 1.120 |
| 1880.00 | 9400 | WCDMA 1900 | RMC | 22.83 | -0.01 | 1.0 cm | FI-167-A | front | 0.500 |
| 1852.40 | 9262 | WCDMA 1900 | RMC | 22.89 | 0.03 | 1.0 cm | FI-167-A | bottom | 0.858 |
| 1880.00 | 9400 | WCDMA 1900 | RMC | 22.83 | 0.06 | 1.0 cm | FI-167-A | bottom | 0.903 |
| 1907.60 | 9538 | WCDMA 1900 | RMC | 22.81 | 0.03 | 1.0 cm | FI-167-A | bottom | 0.845 |
| 1880.00 | 9400 | WCDMA 1900 | RMC | 22.83 | 0.01 | 1.0 cm | FI-167-A | right | 0.365 |
| ANSI / IEEE C95.1 1992 - SAFETY LIMIT<br>Spatial Peak<br>Uncontrolled Exposure/General Population | | | | | | Body<br>1.6 W/kg (mW/g)<br>averaged over 1 gram | | | |

Notes:

1. The test data reported are the worst-case SAR value with the position set in a typical configuration. Test procedures used were according to FCC/OET Bulletin 65, Supplement C [June 2001]
2. All modes of operation were investigated, and worst-case results are reported.
3. Tissue parameters and temperatures are listed on the SAR plots.
4. Batteries are fully charged for all readings. Standard battery was used.
5. Liquid tissue depth was at least 15.0 cm.
6. Device was tested using a fixed spacing.
7. WCDMA mode in Body SAR was tested under RMC 12.2 kbps with HSPA Inactive per KDB Publication 941225 D01. HSPA SAR tests were not required since the average output power of the HSPA subtests was not more than 0.25 dB higher than the RMC level and SAR was less than 1.2 W/kg.
8. Justification for reduced test configurations: Per FCC/OET Bulletin 65 Supplement C (June 2001) and Public Notice DA-02-1438, if the SAR measured at the middle channel for each test configuration is at least 3.0 dB lower than the SAR limit, testing at the high and low channels is optional for such test configuration(s).
9. All samples tested were electrically identical per the applicant.
10. Top and left edges were not tested since the antenna distance from the edge is greater than 2.5 cm per FCC KDB Publication 941225 D06 guidance (see Section 13.4).
11. SAR evaluation requires a single frequency of measurement for valid measurements using the SAR probe and tissue calibrated which are calibrated for specific limited frequency ranges. Therefore, during SAR evaluation it was ensured that the WIFI transmission was disabled by the manufacturer to assess the standalone SAR to be evaluated for SAR. WIFI SAR was separately evaluated to account for the WIFI SAR for portable hotspot exposure conditions (See Section 13).
12. The standard battery contains a near field communications (NFC) antenna, and is the only battery cover that comes with the device. All tests were performed using the standard NFC battery. The technical description contains detailed information about the NFC antenna. As described in Operational Description, the device does not allow any other battery other than model: ICP514657M.
13. Per FCC KDB Publication 941225 D06, when the same wireless modes and device transmission configurations are required for body-worn accessories and hotspot mode, it is not necessary to additionally test body-worn accessory SAR for the same device orientation. Therefore, the hotspot data for the back side configuration additionally shows body-worn compliance.


© 2011 PCTEST Engineering Laboratory, Inc.

**Table 15-16**
**2.4 GHz Hotspot Body SAR Results**

| MEASUREMENT RESULTS | | | | | | | | | | |
|---|---|---|---|---|---|---|---|---|---|---|
| FREQUENCY | | Mode | Service | Conducted Power [dBm] | Power Drift [dB] | Spacing | Serial Number | Data Rate (Mbps) | Side | SAR (1g) |
| MHz | Ch. | | | | | | | | | (W/kg) |
| 2437 | 6 | IEEE 802.11b | DSSS | 17.61 | 0.03 | 1.0 cm | FI-167-A | 1 | back | 0.085 |
| 2437 | 6 | IEEE 802.11b | DSSS | 17.61 | 0.01 | 1.0 cm | FI-167-A | 1 | front | 0.072 |
| 2437 | 6 | IEEE 802.11b | DSSS | 17.61 | 0.04 | 1.0 cm | FI-167-A | 1 | bottom | 0.073 |
| 2437 | 6 | IEEE 802.11b | DSSS | 17.61 | 0.02 | 1.0 cm | FI-167-A | 1 | left | 0.081 |
| ANSI / IEEE C95.1 1992 - SAFETY LIMIT<br>Spatial Peak<br>Uncontrolled Exposure/General Population | | | | | | Body<br>1.6 W/kg (mW/g)<br>averaged over 1 gram | | | | |

Notes:

1. The test data reported are the worst-case SAR value with the position set in a typical configuration. Test procedures used were according to FCC/OET Bulletin 65, Supplement C [June 2001].
2. All modes of operation were investigated, and worst-case results are reported.
3. Batteries are fully charged for all readings. Standard battery was used.
4. Tissue parameters and temperatures are listed on the SAR plots.
5. Liquid tissue depth is was at least 15.0 cm.
6. Device was tested using a fixed spacing.
7. Justification for reduced test configurations for WIFI channels per KDB Publication 248227 and April 2010 FCC/TCB Meeting Notes: Highest average RF output power channel for the lowest data rate were selected for SAR evaluation. Other IEEE 802.11 modes (including 802.11g/n) were not investigated since the average output powers were not greater than 0.25 dB than that of the corresponding channel in the lowest data rate IEEE 802.11b mode.
8. WLAN transmission was verified using a spectrum analyzer.
9. All samples tested were electrically identical per the applicant.
10. Top and Right Edges were not tested since the antenna distance from the edge was greater than 2.5 cm per FCC KDB Publication 941225 D06 (see Section 13.4).
11. The standard battery contains a near field communications (NFC) antenna, and is the only battery cover that comes with the device. All tests were performed using the standard NFC battery. The technical description contains detailed information about the NFC antenna. As described in Operational Description, the device does not allow any other battery other than model: ICP514657M.
12. Per FCC KDB Publication 941225 D06, when the same wireless modes and device transmission configurations are required for body-worn accessories and hotspot mode, it is not necessary to additionally test body-worn accessory SAR for the same device orientation. Therefore, the hotspot data for the back side configuration additionally shows body-worn compliance.


© 2011 PCTEST Engineering Laboratory, Inc.

# 16 FCC MULTI-TX AND ANTENNA SAR CONSIDERATIONS

## 16.1 Introduction

The following procedures adopted from "FCC SAR Considerations for Cell Phones with Multiple Transmitters" FCC KDB Publication 648474 are applicable to handsets with built-in unlicensed transmitters such as 802.11a/b/g/n and Bluetooth devices which may simultaneously transmit with the licensed transmitter.

## 16.2 FCC Power Tables & Conditions

| | 2.45 | 5.15 - 5.35 | 5.47 - 5.85 | GHz |
|---|---|---|---|---|
| $P_{Ref}$ | 12 | 6 | 5 | mW |
| Device output power should be rounded to the nearest mW to compare with values specified in this table. | | | | |

**Figure 16-1**
**Output Power Thresholds for Unlicensed Transmitters**

| | Individual Transmitter | Simultaneous Transmission |
|---|---|---|
| Licensed Transmitters | Routine evaluation required | SAR not required:<br>Unlicensed only<br>○ when stand-alone 1-g SAR is not required and antenna is ≥ 5 cm from other antennas<br>Licensed & Unlicensed<br>○ when the sum of the 1-g SAR is < 1.6 W/kg for all simultaneous transmitting antennas<br>○ when SAR to peak location separation ratio of simultaneous transmitting antenna pair is < 0.3<br>SAR required:<br>Licensed & Unlicensed<br>antenna pairs with SAR to peak location separation ratio ≥ 0.3; test is only required for the configuration that results in the highest SAR in stand-alone configuration for each wireless mode and exposure condition<br>Note: simultaneous transmission exposure conditions for head and body can be different for different style phones; therefore, different test requirements may apply |
| Unlicensed Transmitters | When there is no simultaneous transmission –<br>○ output ≤ 60/f: SAR not required<br>○ output > 60/f: stand-alone SAR required<br>When there is simultaneous transmission –<br>Stand-alone SAR not required when<br>○ output ≤ 2·$P_{Ref}$ and antenna is ≥ 5.0 cm from other antennas<br>○ output ≤ $P_{Ref}$ and antenna is ≥ 2.5 cm from other antennas<br>○ output ≤ $P_{Ref}$ and antenna is < 2.5 cm from other antennas, each with either output power ≤ $P_{Ref}$ or 1-g SAR < 1.2 W/kg<br>Otherwise stand-alone SAR is required<br>When stand-alone SAR is required<br>○ test SAR on highest output channel for each wireless mode and exposure condition<br>○ if SAR for highest output channel is > 50% of SAR limit, evaluate all channels according to normal procedures | |

**Figure 16-2**
**SAR Evaluation Requirements for Multiple Transmitter Handsets**

## 16.3 Multiple Antenna/Transmission Information

The distance between the main antenna and the Bluetooth/WLAN antenna is 22.8 mm.
RF Conducted Power of Bluetooth Tx is 8.072 mW. RF Conducted Power of WLAN is 57.81 mW.


© 2011 PCTEST Engineering Laboratory, Inc.

## 16.4 Simultaneous Transmission Analysis

Based on the output power, antenna separation distance and the Body SAR of the dominant transmitter, a stand-alone Bluetooth SAR test is not required while for WLAN it is required.

Bluetooth, 2.4 GHz WLAN and 5 GHz WLAN share the same antenna path and cannot transmit simultaneously.

**Table 16-1**
**Simultaneous Transmission Scenario (Held to Ear)**

| Simult Tx | Configuration | GSM 850 SAR (W/kg) | 2.4 GHz WIFI SAR (W/kg) | ∑SAR (W/kg) | Simult Tx | Configuration | GSM 1900 SAR (W/kg) | 2.4 GHz WIFI SAR (W/kg) | ∑SAR (W/kg) |
|---|---|---|---|---|---|---|---|---|---|
| Head SAR | Right Cheek | 0.117 | 0.055 | **0.172** | Head SAR | Right Cheek | 0.145 | 0.055 | **0.200** |
| | Right Tilt | 0.080 | 0.042 | **0.123** | | Right Tilt | 0.030 | 0.042 | **0.073** |
| | Left Cheek | 0.096 | 0.098 | **0.194** | | Left Cheek | 0.209 | 0.098 | **0.307** |
| | Left Tilt | 0.067 | 0.021 | **0.088** | | Left Tilt | 0.046 | 0.021 | **0.067** |
| Simult Tx | Configuration | WCDMA 850 SAR (W/kg) | 2.4 GHz WIFI SAR (W/kg) | ∑SAR (W/kg) | Simult Tx | Configuration | WCDMA 1900 SAR (W/kg) | 2.4 GHz WIFI SAR (W/kg) | ∑SAR (W/kg) |
| Head SAR | Right Cheek | 0.108 | 0.055 | **0.163** | Head SAR | Right Cheek | 0.255 | 0.055 | **0.310** |
| | Right Tilt | 0.071 | 0.042 | **0.114** | | Right Tilt | 0.056 | 0.042 | **0.099** |
| | Left Cheek | 0.090 | 0.098 | **0.188** | | Left Cheek | 0.366 | 0.098 | **0.464** |
| | Left Tilt | 0.062 | 0.021 | **0.083** | | Left Tilt | 0.090 | 0.021 | **0.111** |

The above tables represent at held to ear voice call with 2.4 GHz WLAN Data.

**Table 16-2**
**Simultaneous Transmission Scenario (Held to Ear)**

| Simult Tx | Configuration | GSM 850 SAR (W/kg) | 5 GHz WIFI SAR (W/kg) | ∑SAR (W/kg) | Simult Tx | Configuration | GSM 1900 SAR (W/kg) | 5 GHz WIFI SAR (W/kg) | ∑SAR (W/kg) |
|---|---|---|---|---|---|---|---|---|---|
| Head SAR | Right Cheek | 0.117 | 0.098 | **0.215** | Head SAR | Right Cheek | 0.145 | 0.098 | **0.243** |
| | Right Tilt | 0.080 | 0.056 | **0.136** | | Right Tilt | 0.030 | 0.056 | **0.086** |
| | Left Cheek | 0.096 | 0.119 | **0.215** | | Left Cheek | 0.209 | 0.119 | **0.328** |
| | Left Tilt | 0.066 | 0.084 | **0.150** | | Left Tilt | 0.046 | 0.084 | **0.130** |
| Simult Tx | Configuration | WCDMA 850 SAR (W/kg) | 5 GHz WIFI SAR (W/kg) | ∑SAR (W/kg) | Simult Tx | Configuration | WCDMA 1900 SAR (W/kg) | 5 GHz WIFI SAR (W/kg) | ∑SAR (W/kg) |
| Head SAR | Right Cheek | 0.108 | 0.098 | **0.206** | Head SAR | Right Cheek | 0.255 | 0.098 | **0.353** |
| | Right Tilt | 0.007 | 0.056 | **0.063** | | Right Tilt | 0.056 | 0.056 | **0.112** |
| | Left Cheek | 0.090 | 0.119 | **0.209** | | Left Cheek | 0.366 | 0.119 | **0.485** |
| | Left Tilt | 0.062 | 0.084 | **0.146** | | Left Tilt | 0.083 | 0.084 | **0.167** |

The above tables represent at held to ear voice call with 5 GHz WLAN Data.


© 2011 PCTEST Engineering Laboratory, Inc.

**Table 16-3**
**Simultaneous Transmission Scenario (Body Worn at 1.0 cm)**

| Configuration | Mode | 2G/3G SAR (W/kg) | 2.4 GHz WIFI SAR (W/kg) | ΣSAR (W/kg) |
|---|---|---|---|---|
| Back Side | GPRS 850 | 0.495 | 0.085 | **0.580** |
| Back Side | GPRS 1900 | 1.070 | 0.085 | **1.155** |
| Back Side | WCDMA 850 | 0.363 | 0.085 | **0.448** |
| Back Side | WCDMA 1900 | 1.120 | 0.085 | **1.205** |

The above tables represent body worn voice call with 2.4 GHz WLAN Data.

**Table 16-4**
**Simultaneous Transmission Scenario (Body Worn at 1.0 cm)**

| Configuration | Mode | 2G/3G SAR (W/kg) | 5 GHz WIFI SAR (W/kg) | ΣSAR (W/kg) |
|---|---|---|---|---|
| Back Side | GPRS 850 | 0.495 | 0.046 | **0.541** |
| Back Side | GPRS 1900 | 1.070 | 0.046 | **1.116** |
| Back Side | WCDMA 850 | 0.363 | 0.046 | **0.409** |
| Back Side | WCDMA 1900 | 1.120 | 0.046 | **1.166** |

The above tables represent body worn voice call with 5 GHz WLAN Data.

**Table 16-5**
**Simultaneous Transmission Scenario (Hotspot at 1.0 cm)**

| Simult Tx | Configuration | GPRS 850 SAR (W/kg) | 2.4 GHz WIFI SAR (W/kg) | ΣSAR (W/kg) | Simult Tx | Configuration | GPRS 1900 SAR (W/kg) | 2.4 GHz WIFI SAR (W/kg) | ΣSAR (W/kg) |
|---|---|---|---|---|---|---|---|---|---|
| Body SAR | Back | 0.495 | 0.085 | **0.580** | Body SAR | Back | 1.070 | 0.085 | **1.155** |
| | Front | 0.235 | 0.072 | **0.307** | | Front | 0.442 | 0.072 | **0.514** |
| | Top | - | - | **0.000** | | Top | - | - | **0.000** |
| | Bottom | 0.089 | 0.073 | **0.162** | | Bottom | 0.771 | 0.073 | **0.844** |
| | Right | 0.367 | - | **0.367** | | Right | 0.283 | - | **0.283** |
| | Left | - | 0.081 | **0.081** | | Left | - | 0.081 | **0.081** |
| Simult Tx | Configuration | WCDMA 850 SAR (W/kg) | 2.4 GHz WIFI SAR (W/kg) | ΣSAR (W/kg) | Simult Tx | Configuration | WCDMA 1900 SAR (W/kg) | 2.4 GHz WIFI SAR (W/kg) | ΣSAR (W/kg) |
| Body SAR | Back | 0.363 | 0.085 | **0.448** | Body SAR | Back | 1.120 | 0.085 | **1.205** |
| | Front | 0.156 | 0.072 | **0.228** | | Front | 0.500 | 0.072 | **0.572** |
| | Top | - | - | **0.000** | | Top | - | - | **0.000** |
| | Bottom | 0.063 | 0.073 | **0.136** | | Bottom | 0.903 | 0.073 | **0.976** |
| | Right | 0.281 | - | **0.281** | | Right | 0.365 | - | **0.365** |
| | Left | - | 0.081 | **0.081** | | Left | - | 0.081 | **0.081** |

Note: Per FCC KDB Publication 941225 D06, the edges with antennas more than 2.5 cm are not required to be evaluated for SAR ("-"). The above tables represent a 2G/3G portable hotspot configuration. When hotspot is enabled, all 5 GHz Bands are disabled.

## 16.5 Simultaneous Transmission Conclusion

The above numerical summed SAR was below the SAR limit. Therefore, the above analysis is sufficient to determine that simultaneous transmission cases will not exceed the SAR limit. Therefore, no volumetric SAR summation is required per FCC KDB Publication 648474.


© 2011 PCTEST Engineering Laboratory, Inc.

# 17 EQUIPMENT LIST

| Manufacturer | Model | Description | Cal Date | Cal Interval | Cal Due | Serial Number |
|---|---|---|---|---|---|---|
| Agilent | 85070B | Dielectric Probe Kit | 8/22/2010 | Annual | 8/22/2011 | US33020316 |
| Agilent | 8648D | (9kHz-4GHz) Signal Generator | 10/13/2010 | Annual | 10/13/2011 | 3613A00315 |
| Agilent | 8753E | (30kHz-6GHz) Network Analyzer | 4/21/2011 | Annual | 4/21/2012 | JP38020182 |
| Agilent | E5515C | Wireless Communications Test Set | 10/11/2010 | Annual | 10/11/2011 | GB46110872 |
| Agilent | E5515C | Wireless Communications Test Set | 10/8/2010 | Annual | 10/8/2011 | GB46310798 |
| Agilent | E5515C | Wireless Communications Test Set | 8/13/2010 | Annual | 8/13/2011 | GB41450275 |
| Agilent | E8257D | (250kHz-20GHz) Signal Generator | 4/8/2011 | Annual | 4/8/2012 | MY45470194 |
| Gigatronics | 80701A | (0.05-18GHz) Power Sensor | 10/11/2010 | Annual | 10/11/2011 | 1833460 |
| Gigatronics | 8651A | Universal Power Meter | 10/11/2010 | Annual | 10/11/2011 | 8650319 |
| Rohde & Schwarz | CMU200 | Base Station Simulator | 11/11/2010 | Annual | 11/11/2011 | 836371/0079 |
| Rohde & Schwarz | CMU200 | Base Station Simulator | 6/1/2011 | Annual | 6/1/2012 | 833855/0010 |
| Rohde & Schwarz | CMU200 | Base Station Simulator | 4/19/2011 | Annual | 4/19/2012 | 107826 |
| Rohde & Schwarz | NRVD | Dual Channel Power Meter | 4/8/2011 | Biennial | 4/8/2013 | 101695 |
| SPEAG | D1765V2 | 1765 MHz SAR Dipole | 6/16/2011 | Annual | 6/16/2012 | 1008 |
| SPEAG | D1900V2 | 1900 MHz SAR Dipole | 2/17/2011 | Annual | 2/17/2012 | 502 |
| SPEAG | D1900V2 | 1900 MHz SAR Dipole | 8/18/2009 | Biennial | 8/18/2011 | 5d080 |
| SPEAG | D2450V2 | 2450 MHz SAR Dipole | 8/27/2009 | Biennial | 8/27/2011 | 719 |
| SPEAG | D2450V2 | 2450 MHz SAR Dipole | 2/8/2011 | Annual | 2/8/2012 | 797 |
| SPEAG | D2600V2 | 2600 MHz SAR Dipole | 4/15/2011 | Annual | 4/15/2012 | 1004 |
| SPEAG | D5GHzV2 | 5 GHz SAR Dipole | 8/19/2009 | Biennial | 8/19/2011 | 1007 |
| SPEAG | D5GHzV2 | 5 GHz SAR Dipole | 2/11/2011 | Annual | 2/11/2012 | 1057 |
| SPEAG | D835V2 | 835 MHz SAR Dipole | 2/9/2011 | Annual | 2/9/2012 | 4d047 |
| SPEAG | D835V2 | 835 MHz SAR Dipole | 8/24/2009 | Biennial | 8/24/2011 | 4d026 |
| SPEAG | DAE3 | Dasy Data Acquisition Electronics | 11/18/2010 | Annual | 11/18/2011 | 455 |
| SPEAG | DAE4 | Dasy Data Acquisition Electronics | 3/17/2011 | Annual | 3/17/2012 | 704 |
| SPEAG | DAE4 | Dasy Data Acquisition Electronics | 4/20/2011 | Annual | 4/20/2012 | 665 |
| SPEAG | DAE4 | Dasy Data Acquisition Electronics | 2/21/2011 | Annual | 2/21/2012 | 649 |
| SPEAG | ES3DV2 | SAR Probe | 9/21/2010 | Annual | 9/21/2011 | 3022 |
| SPEAG | EX3DV4 | SAR Probe | 8/19/2010 | Annual | 8/19/2011 | 3561 |
| SPEAG | EX3DV4 | SAR Probe | 2/14/2011 | Annual | 2/14/2012 | 3550 |
| SPEAG | DAE4 | Dasy Data Acquisition Electronics | 5/19/2011 | Annual | 5/19/2012 | 859 |
| SPEAG | D750V3 | 750 MHz Dipole | 2/14/2011 | Annual | 2/14/2012 | 1003 |
| SPEAG | ES3DV3 | SAR Probe | 3/24/2011 | Annual | 3/24/2012 | 3213 |
| SPEAG | ES3DV3 | SAR Probe | 4/18/2011 | Annual | 4/18/2012 | 3209 |
| Rohde & Schwarz | SMIQ03B | Signal Generator | 4/6/2011 | Annual | 4/6/2012 | DE27259 |
| SPEAG | D1640V2 | 1640 MHz Dipole | 8/17/2010 | Annual | 8/17/2011 | 321 |
| Rohde & Schwarz | CMW500 | LTE Radio Communication Tester | 8/30/2010 | Annual | 8/30/2011 | 100976 |
| Anritsu | MA2481A | Power Sensor | 2/7/2011 | Annual | 2/7/2012 | 5318 |
| Anritsu | MA2481A | Power Sensor | 2/7/2011 | Annual | 2/7/2012 | 5442 |
| Anritsu | ML2438A | Power Meter | 2/7/2011 | Annual | 2/7/2012 | 1190013 |
| Anritsu | ML2438A | Power Meter | 2/7/2011 | Annual | 2/7/2012 | 98150041 |
| Agilent | 8648D | Signal Generator | 4/5/2011 | Annual | 4/5/2012 | 3629U00687 |
| Anritsu | ML2438A | Power Meter | 2/7/2011 | Annual | 2/7/2012 | 1070030 |
| Anritsu | MA2481A | Power Sensor | 2/7/2011 | Annual | 2/7/2012 | 5821 |
| Anritsu | MA2481A | Power Sensor | 2/7/2011 | Annual | 2/7/2012 | 8013 |
| Anritsu | MA2481A | Power Sensor | 2/7/2011 | Annual | 2/7/2012 | 5605 |
| Anritsu | MA2481A | Power Sensor | 2/7/2011 | Annual | 2/7/2012 | 2400 |
| Agilent | E5515C | Wireless Communications Test Set | 8/13/2010 | Annual | 8/13/2011 | GB43304447 |
| Agilent | E5515C | Wireless Communications Tester | 4/21/2011 | Annual | 4/21/2012 | US41140256 |
| Amplifier Research | 5S1G4 | 5W, 800MHz-4.2GHz | N/A | | | 21910 |
| Mini-Circuits | BW-N20W5+ | DC to 18 GHz Precision Fixed 20 dB Attenuator | N/A | | | N/A |
| Agilent | E5515C | Wireless Communications Test Set | 2/8/2011 | Annual | 2/8/2012 | GB45360985 |
| SPEAG | D3700V2 | 3700 MHz SAR Dipole | 2/16/2011 | Annual | 2/16/2012 | 1002 |
| Rohde & Schwarz | CMW500 | LTE Radio Communication Tester | 3/11/2011 | Annual | 3/11/2012 | 103962 |
| Control Company | 61220-416 | Long-Stem Thermometer | 2/15/2011 | Biennial | 2/15/2013 | 111331322 |
| Control Company | 61220-416 | Long-Stem Thermometer | 2/15/2011 | Biennial | 2/15/2013 | 111331323 |
| Control Company | 61220-416 | Long-Stem Thermometer | 2/15/2011 | Biennial | 2/15/2013 | 111331330 |
| Control Company | 61220-416 | Long-Stem Thermometer | 2/15/2011 | Biennial | 2/15/2013 | 111331332 |
| Control Company | 61220-416 | Long-Stem Thermometer | 3/16/2011 | Biennial | 3/16/2013 | 111391601 |
| SPEAG | ES3DV3 | SAR Probe | 4/8/2011 | Annual | 4/8/2012 | 3258 |
| SPEAG | D1750V2 | 1750 MHz SAR Dipole | 5/24/2011 | Annual | 5/24/2012 | 1051 |
| Narda | 4772-3 | Attenuator (3dB) | N/A | | | 9406 |
| Narda | BW-S3W2 | Attenuator (3dB) | N/A | | | 120 |


© 2011 PCTEST Engineering Laboratory, Inc.

# 18 MEASUREMENT UNCERTAINTIES

Applicable for 750 – 3000 MHz.

| a | b | c | d | e= f(d,k) | f | g | h = c x f/e | i = c x g/e | k |
|---|---|---|---|---|---|---|---|---|---|
| **Uncertainty Component** | **IEEE 1528 Sec.** | **Tol. (± %)** | **Prob. Dist.** | **Div.** | **$c_i$ 1gm** | **$c_i$ 10 gms** | **1gm $u_i$ (± %)** | **10gms $u_i$ (± %)** | **$v_i$** |
| **Measurement System** | | | | | | | | | |
| Probe Calibration | E.2.1 | 6.0 | N | 1 | 1.0 | 1.0 | 6.0 | 6.0 | ∞ |
| Axial Isotropy | E.2.2 | 0.25 | N | 1 | 0.7 | 0.7 | 0.2 | 0.2 | ∞ |
| Hemishperical Isotropy | E.2.2 | 1.3 | N | 1 | 1.0 | 1.0 | 1.3 | 1.3 | ∞ |
| Boundary Effect | E.2.3 | 0.4 | N | 1 | 1.0 | 1.0 | 0.4 | 0.4 | ∞ |
| Linearity | E.2.4 | 0.3 | N | 1 | 1.0 | 1.0 | 0.3 | 0.3 | ∞ |
| System Detection Limits | E.2.5 | 5.1 | N | 1 | 1.0 | 1.0 | 5.1 | 5.1 | ∞ |
| Readout Electronics | E.2.6 | 1.0 | N | 1 | 1.0 | 1.0 | 1.0 | 1.0 | ∞ |
| Response Time | E.2.7 | 0.8 | R | 1.73 | 1.0 | 1.0 | 0.5 | 0.5 | ∞ |
| Integration Time | E.2.8 | 2.6 | R | 1.73 | 1.0 | 1.0 | 1.5 | 1.5 | ∞ |
| RF Ambient Conditions | E.6.1 | 3.0 | R | 1.73 | 1.0 | 1.0 | 1.7 | 1.7 | ∞ |
| Probe Positioner Mechanical Tolerance | E.6.2 | 0.4 | R | 1.73 | 1.0 | 1.0 | 0.2 | 0.2 | ∞ |
| Probe Positioning w/ respect to Phantom | E.6.3 | 2.9 | R | 1.73 | 1.0 | 1.0 | 1.7 | 1.7 | ∞ |
| Extrapolation, Interpolation & Integration algorithms for Max. SAR Evaluation | E.5 | 1.0 | R | 1.73 | 1.0 | 1.0 | 0.6 | 0.6 | ∞ |
| **Test Sample Related** | | | | | | | | | |
| Test Sample Positioning | E.4.2 | 6.0 | N | 1 | 1.0 | 1.0 | 6.0 | 6.0 | 287 |
| Device Holder Uncertainty | E.4.1 | 3.32 | R | 1.73 | 1.0 | 1.0 | 1.9 | 1.9 | ∞ |
| Output Power Variation - SAR drift measurement | 6.6.2 | 5.0 | R | 1.73 | 1.0 | 1.0 | 2.9 | 2.9 | ∞ |
| **Phantom & Tissue Parameters** | | | | | | | | | |
| Phantom Uncertainty (Shape & Thickness tolerances) | E.3.1 | 4.0 | R | 1.73 | 1.0 | 1.0 | 2.3 | 2.3 | ∞ |
| Liquid Conductivity - deviation from target values | E.3.2 | 5.0 | R | 1.73 | 0.64 | 0.43 | 1.8 | 1.2 | ∞ |
| Liquid Conductivity - measurement uncertainty | E.3.3 | 3.8 | N | 1 | 0.64 | 0.43 | 2.4 | 1.6 | 6 |
| Liquid Permittivity - deviation from target values | E.3.2 | 5.0 | R | 1.73 | 0.60 | 0.49 | 1.7 | 1.4 | ∞ |
| Liquid Permittivity - measurement uncertainty | E.3.3 | 4.5 | N | 1 | 0.60 | 0.49 | 2.7 | 2.2 | 6 |
| **Combined Standard Uncertainty (k=1)** | | | RSS | | | | 12.1 | 11.7 | 299 |
| **Expanded Uncertainty** (95% CONFIDENCE LEVEL) | | | k=2 | | | | 24.2 | 23.5 | |

The above measurement uncertainties are according to IEEE Std. 1528-2003


© 2011 PCTEST Engineering Laboratory, Inc.

Applicable for 5 GHz.

| a | b | c | d | e= f(d,k) | f | g | h = c x f/e | i = c x g/e | k |
|---|---|---|---|---|---|---|---|---|---|
| **Uncertainty Component** | **IEEE 1528 Sec.** | **Tol. (± %)** | **Prob. Dist.** | **Div.** | **$c_i$ 1gm** | **$c_i$ 10 gms** | **1gm $u_i$ (± %)** | **10gms $u_i$ (± %)** | **$v_i$** |
| **Measurement System** | | | | | | | | | |
| Probe Calibration | E.2.1 | 6.55 | N | 1 | 1.0 | 1.0 | 6.6 | 6.6 | ∞ |
| Axial Isotropy | E.2.2 | 0.25 | N | 1 | 0.7 | 0.7 | 0.2 | 0.2 | ∞ |
| Hemishperical Isotropy | E.2.2 | 1.3 | N | 1 | 1.0 | 1.0 | 1.3 | 1.3 | ∞ |
| Boundary Effect | E.2.3 | 0.4 | N | 1 | 1.0 | 1.0 | 0.4 | 0.4 | ∞ |
| Linearity | E.2.4 | 0.3 | N | 1 | 1.0 | 1.0 | 0.3 | 0.3 | ∞ |
| System Detection Limits | E.2.5 | 5.1 | N | 1 | 1.0 | 1.0 | 5.1 | 5.1 | ∞ |
| Readout Electronics | E.2.6 | 1.0 | N | 1 | 1.0 | 1.0 | 1.0 | 1.0 | ∞ |
| Response Time | E.2.7 | 0.8 | R | 1.73 | 1.0 | 1.0 | 0.5 | 0.5 | ∞ |
| Integration Time | E.2.8 | 2.6 | R | 1.73 | 1.0 | 1.0 | 1.5 | 1.5 | ∞ |
| RF Ambient Conditions | E.6.1 | 3.0 | R | 1.73 | 1.0 | 1.0 | 1.7 | 1.7 | ∞ |
| Probe Positioner Mechanical Tolerance | E.6.2 | 0.4 | R | 1.73 | 1.0 | 1.0 | 0.2 | 0.2 | ∞ |
| Probe Positioning w/ respect to Phantom | E.6.3 | 2.9 | R | 1.73 | 1.0 | 1.0 | 1.7 | 1.7 | ∞ |
| Extrapolation, Interpolation & Integration algorithms for Max. SAR Evaluation | E.5 | 1.0 | R | 1.73 | 1.0 | 1.0 | 0.6 | 0.6 | ∞ |
| **Test Sample Related** | | | | | | | | | |
| Test Sample Positioning | E.4.2 | 6.0 | N | 1 | 1.0 | 1.0 | 6.0 | 6.0 | 287 |
| Device Holder Uncertainty | E.4.1 | 3.32 | R | 1.73 | 1.0 | 1.0 | 1.9 | 1.9 | ∞ |
| Output Power Variation - SAR drift measurement | 6.6.2 | 5.0 | R | 1.73 | 1.0 | 1.0 | 2.9 | 2.9 | ∞ |
| **Phantom & Tissue Parameters** | | | | | | | | | |
| Phantom Uncertainty (Shape & Thickness tolerances) | E.3.1 | 4.0 | R | 1.73 | 1.0 | 1.0 | 2.3 | 2.3 | ∞ |
| Liquid Conductivity - deviation from target values | E.3.2 | 5.0 | R | 1.73 | 0.64 | 0.43 | 1.8 | 1.2 | ∞ |
| Liquid Conductivity - measurement uncertainty | E.3.3 | 3.8 | N | 1 | 0.64 | 0.43 | 2.4 | 1.6 | 6 |
| Liquid Permittivity - deviation from target values | E.3.2 | 5.0 | R | 1.73 | 0.60 | 0.49 | 1.7 | 1.4 | ∞ |
| Liquid Permittivity - measurement uncertainty | E.3.3 | 4.5 | N | 1 | 0.60 | 0.49 | 2.7 | 2.2 | 6 |
| **Combined Standard Uncertainty (k=1)** | | | RSS | | | | 12.4 | 12.0 | 299 |
| **Expanded Uncertainty** (95% CONFIDENCE LEVEL) | | | k=2 | | | | 24.7 | 24.0 | |

The above measurement uncertainties are according to IEEE Std. 1528-2003


© 2011 PCTEST Engineering Laboratory, Inc.

# 19 CONCLUSION

## 19.1 Measurement Conclusion

The SAR evaluation indicates that the EUT complies with the RF radiation exposure limits of the FCC and Industry Canada, with respect to all parameters subject to this test. These measurements were taken to simulate the RF effects of RF exposure under worst-case conditions. Precise laboratory measures were taken to assure repeatability of the tests. The results and statements relate only to the item(s) tested.

Please note that the absorption and distribution of electromagnetic energy in the body are very complex phenomena that depend on the mass, shape, and size of the body, the orientation of the body with respect to the field vectors, and the electrical properties of both the body and the environment. Other variables that may play a substantial role in possible biological effects are those that characterize the environment (e.g. ambient temperature, air velocity, relative humidity, and body insulation) and those that characterize the individual (e.g. age, gender, activity level, debilitation, or disease). Because various factors may interact with one another to vary the specific biological outcome of an exposure to electromagnetic fields, any protection guide should consider maximal amplification of biological effects as a result of field-body interactions, environmental conditions, and physiological variables. [3]


© 2011 PCTEST Engineering Laboratory, Inc.

# 20 REFERENCES


[1] Federal Communications Commission, ET Docket 93-62, Guidelines for Evaluating the Environmental Effects of Radiofrequency Radiation, Aug. 1996.

[2] ANSI/IEEE C95.1-2005, American National Standard safety levels with respect to human exposure to radio frequency electromagnetic fields, 300kHz to 100GHz, New York: IEEE, 2006.

[3] ANSI/IEEE C95.1-1992, American National Standard safety levels with respect to human exposure to radio frequency electromagnetic fields, 300kHz to 100GHz, New York: IEEE, Sept. 1992.

[4] ANSI/IEEE C95.3-2002, IEEE Recommended Practice for the Measurement of Potentially Hazardous Electromagnetic Fields - RF and Microwave, New York: IEEE, December 2002.

[5] Federal Communications Commission, OET Bulletin 65 (Edition 97-01), Supplement C (Edition 01-01), Evaluating Compliance with FCC Guidelines for Human Exposure to Radiofrequency Electromagnetic Fields, June 2001.

[6] IEEE Standards Coordinating Committee 34 – IEEE Std. 1528-2003, Recommended Practice for Determining the Peak Spatial-Average Specific Absorption Rate (SAR) in the Human Body Due to Wireless Communications Devices.

[7] NCRP, National Council on Radiation Protection and Measurements, Biological Effects and Exposure Criteria for RadioFrequency Electromagnetic Fields, NCRP Report No. 86, 1986. Reprinted Feb. 1995.

[8] T. Schmid, O. Egger, N. Kuster, Automated E-field scanning system for dosimetric assessments, IEEE Transaction on Microwave Theory and Techniques, vol. 44, Jan. 1996, pp. 105-113.

[9] K. Pokovic, T. Schmid, N. Kuster, Robust setup for precise calibration of E-field probes in tissue simulating liquids at mobile communications frequencies, ICECOM97, Oct. 1997, pp. 120-124.

[10] K. Pokovic, T. Schmid, and N. Kuster, E-field Probe with improved isotropy in brain simulating liquids, Proceedings of the ELMAR, Zadar, Croatia, June 23-25, 1996, pp. 172-175.

[11] Schmid & Partner Engineering AG, Application Note: Data Storage and Evaluation, June 1998, p2.

[12] V. Hombach, K. Meier, M. Burkhardt, E. Kuhn, N. Kuster, The Dependence of EM Energy Absorption upon Human Head Modeling at 900 MHz, IEEE Transaction on Microwave Theory and Techniques, vol. 44 no. 10, Oct. 1996, pp. 1865-1873.

[13] N. Kuster and Q. Balzano, Energy absorption mechanism by biological bodies in the near field of dipole antennas above 300MHz, IEEE Transaction on Vehicular Technology, vol. 41, no. 1, Feb. 1992, pp. 17-23.

[14] G. Hartsgrove, A. Kraszewski, A. Surowiec, Simulated Biological Materials for Electromagnetic Radiation Absorption Studies, University of Ottawa, Bioelectromagnetics, Canada: 1987, pp. 29-36.

[15] Q. Balzano, O. Garay, T. Manning Jr., Electromagnetic Energy Exposure of Simulated Users of Portable Cellular Telephones, IEEE Transactions on Vehicular Technology, vol. 44, no.3, Aug. 1995.

[16] W. Gander, Computermathematick, Birkhaeuser, Basel, 1992.

[17] W.H. Press, S.A. Teukolsky, W.T. Vetterling, and B.P. Flannery, Numerical Recipes in C, The Art of Scientific Computing, Second edition, Cambridge University Press, 1992.



© 2011 PCTEST Engineering Laboratory, Inc.

[18] Federal Communications Commission, OET Bulletin 65, Evaluating Compliance with FCC Guidelines for Human Exposure to Radiofrequency Electromagnetic Fields. Supplement C, Dec. 1997.

[19] N. Kuster, R. Kastle, T. Schmid, Dosimetric evaluation of mobile communications equipment with known precision, IEEE Transaction on Communications, vol. E80-B, no. 5, May 1997, pp. 645-652.

[20] CENELEC CLC/SC111B, European Prestandard (prENV 50166-2), Human Exposure to Electromagnetic Fields High-frequency: 10kHz-300GHz, Jan. 1995.

[21] Prof. Dr. Niels Kuster, ETH, Eidgenössische Technische Hoschschule Zürich, Dosimetric Evaluation of the Cellular Phone.

[22] IEC 62209-1, Human exposure to radio frequency fields from hand-held and body-mounted wireless communication devices - Human models, instrumentation, and procedures - Part 1: Procedure to determine the specific absorption rate (SAR) for hand-held devices used in close proximity to the ear (frequency range of 300 MHz to 3 GHz), Feb. 2005.

[23] Industry Canada RSS-102 Radio Frequency Exposure Compliance of Radiocommunication Apparatus (All Frequency Bands) Issue 4, March 2010.

[24] Health Canada Safety Code 6 Limits of Human Exposure to Radio Frequency Electromagnetic Fields in the Frequency Range from 3 kHz – 300 GHz, 2009

[25] FCC Public Notice DA-02-1438. Office of Engineering and Technology Announces a Transition Period for the Phantom Requirements of Supplement C to OET Bulletin 65, June 19, 2002

[26] FCC SAR Measurement Procedures for 3G Devices KDB Publication 941225

[27] SAR Measurement procedures for IEEE 802.11a/b/g KDB Publication 248227

[28] FCC SAR Considerations for Handsets with Multiple Transmitters and Antennas, KDB Publication 648474

[29] FCC Application Note for SAR Probe Calibration and System Verification Consideration for Measurements at 150 MHz – 3 GHz, KDB Publication 450824

[30] FCC SAR Evaluation Considerations for Laptop Computers with Antennas Built-in on Display Screens, KDB Publication 616217

[31] FCC SAR Measurement Requirements for 3 – 6 GHz, KDB Publication 865664

[32] FCC Mobile Portable RF Exposure Procedure, KDB Publication 447498

[33] FCC SAR Procedures for Dongle Transmitters, KDB Publication 447498

[34] Anexo à Resolução No. 533, de 10 de Septembro de 2009.

[35] FCC SAR Test Considerations for LTE Handsets and Data Modems, KDB Publication 941225.

[36] IEC 62209-2, Human exposure to radio frequency fields from hand-held and body-mounted wireless communication devices - Human models, instrumentation, and procedures - Part 2: Procedure to determine the specific absorption rate (SAR) for wireless communication devices used in close proximity to the human body (frequency range of 30 MHz to 6 GHz), Mar. 2010.

[37] FCC Hot Spot SAR v01, KDB Publication 941225 D06.


© 2011 PCTEST Engineering Laboratory, Inc.

# APPENDIX A: SAR TEST DATA

# PCTEST ENGINEERING LABORATORY, INC.

**DUT: A3LGTI9100P; Type: 850/1900 GSM/GPRS/EDGE/WCDMA/HSPA Phone with Bluetooth, WLAN and NFC; Serial: FI-167-A**

Communication System: GSM850; Frequency: 836.6 MHz;Duty Cycle: 1:8.3
Medium: 835 Head Medium parameters used (interpolated):
f = 836.6 MHz; $\sigma$ = 0.86 mho/m; $\varepsilon_r$ = 40.3; $\rho$ = 1000 kg/m$^3$
Phantom section: Right Section

Test Date: 07-25-2011; Ambient Temp: 23.6 °C; Tissue Temp: 21.8 °C

Probe: ES3DV3 - SN3258; ConvF(6.18, 6.18, 6.18); Calibrated: 4/8/2011
Sensor-Surface: 4mm (Mechanical Surface Detection)
Electronics: DAE4 Sn649; Calibrated: 2/21/2011
Phantom: SAM Sub; Type: SAM 4.0; Serial: TP-1403
Measurement SW: DASY4, V4.7 Build 80; Postprocessing SW: SEMCAD, V1.8 Build 186

## Mode: GSM 850, Right Head, Touch, Mid.ch

**Area Scan (7x14x1):** Measurement grid: dx=15mm, dy=15mm
**Zoom Scan (5x5x7)/Cube 0:** Measurement grid: dx=8mm, dy=8mm, dz=5mm
Reference Value = 12.1 V/m
Peak SAR (extrapolated) = 0.151 W/kg
**SAR(1 g) = 0.117 mW/g; SAR(10 g) = 0.088 mW/g**

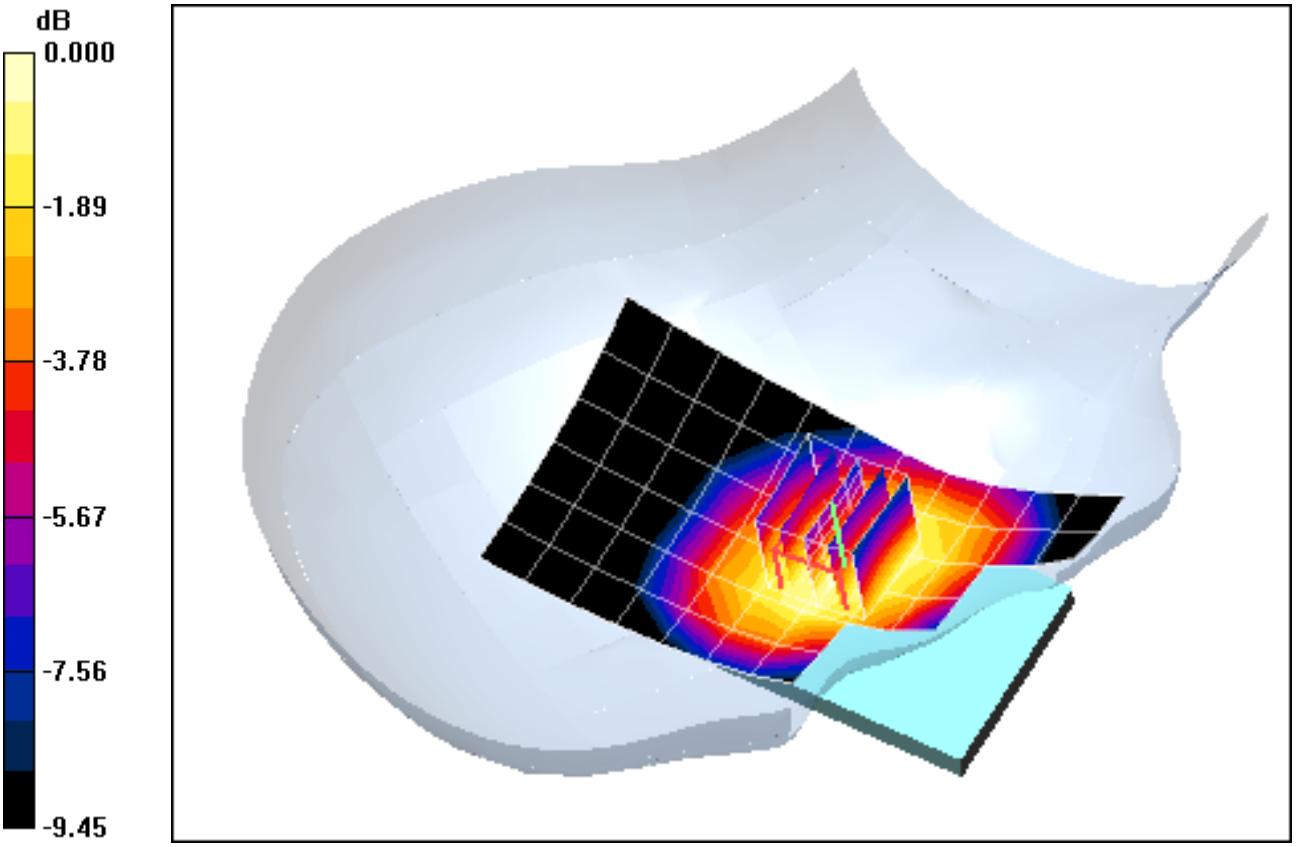


0 dB = 0.124mW/g

# PCTEST ENGINEERING LABORATORY, INC.

**DUT: A3LGTI9100P; Type: 850/1900 GSM/GPRS/EDGE/WCDMA/HSPA Phone with Bluetooth, WLAN and NFC; Serial: FI-167-A**

Communication System: GSM850; Frequency: 836.6 MHz;Duty Cycle: 1:8.3
Medium: 835 Head Medium parameters used (interpolated):
f = 836.6 MHz; $\sigma$ = 0.86 mho/m; $\varepsilon_r$ = 40.3; $\rho$ = 1000 kg/m$^3$
Phantom section: Right Section

Test Date: 07-25-2011; Ambient Temp: 23.6 °C; Tissue Temp: 21.8 °C

Probe: ES3DV3 - SN3258; ConvF(6.18, 6.18, 6.18); Calibrated: 4/8/2011
Sensor-Surface: 4mm (Mechanical Surface Detection)
Electronics: DAE4 Sn649; Calibrated: 2/21/2011
Phantom: SAM Sub; Type: SAM 4.0; Serial: TP-1403
Measurement SW: DASY4, V4.7 Build 80; Postprocessing SW: SEMCAD, V1.8 Build 186

## Mode: GSM 850, Right Head, Touch, Mid.ch

**Area Scan (7x14x1):** Measurement grid: dx=15mm, dy=15mm
**Zoom Scan (5x5x7)/Cube 0:** Measurement grid: dx=8mm, dy=8mm, dz=5mm
Reference Value = 12.1 V/m
Peak SAR (extrapolated) = 0.151 W/kg
**SAR(1 g) = 0.117 mW/g; SAR(10 g) = 0.088 mW/g**

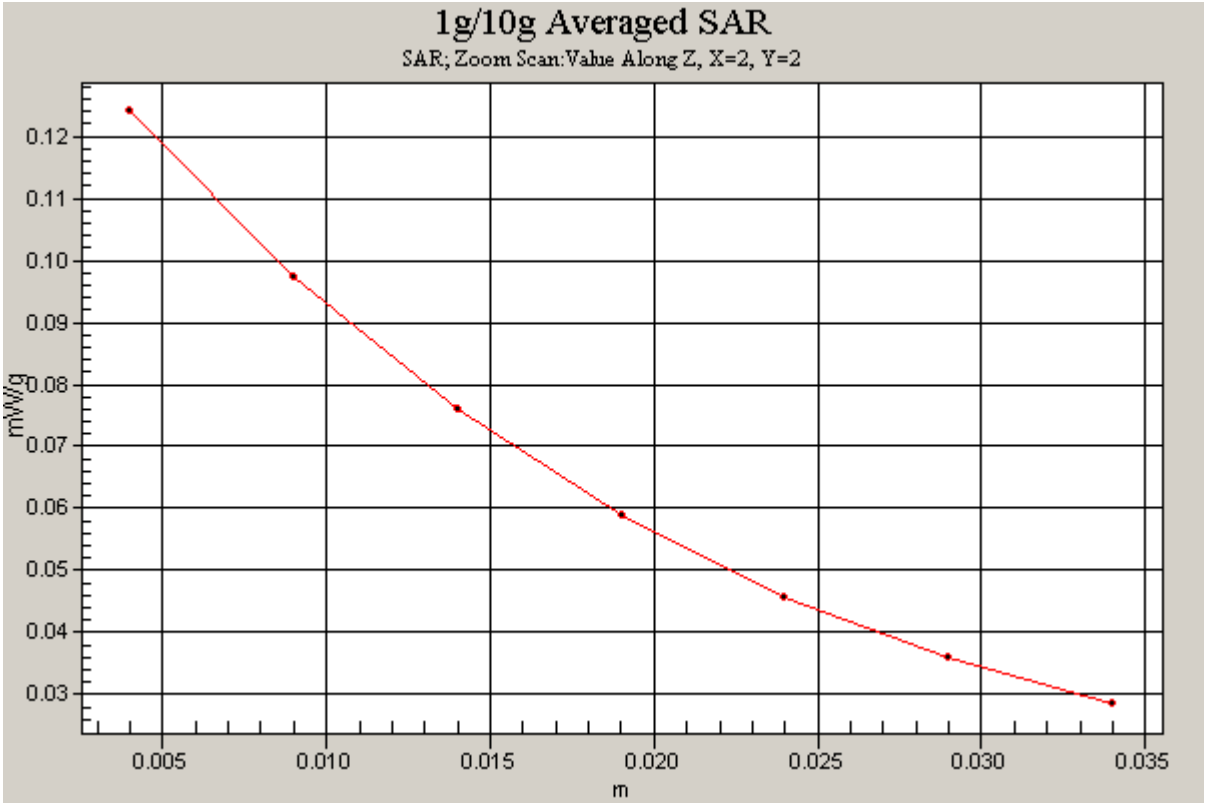

# PCTEST ENGINEERING LABORATORY, INC.

**DUT: A3LGTI9100P; Type: 850/1900 GSM/GPRS/EDGE/WCDMA/HSPA Phone with Bluetooth, WLAN and NFC; Serial: FI-167-A**

Communication System: GSM850; Frequency: 836.6 MHz;Duty Cycle: 1:8.3
Medium: 835 Head Medium parameters used (interpolated):
f = 836.6 MHz; $\sigma$ = 0.86 mho/m; $\varepsilon_r$ = 40.3; $\rho$ = 1000 kg/m$^3$
Phantom section: Right Section

Test Date: 07-25-2011; Ambient Temp: 23.6 °C; Tissue Temp: 21.8 °C

Probe: ES3DV3 - SN3258; ConvF(6.18, 6.18, 6.18); Calibrated: 4/8/2011
Sensor-Surface: 4mm (Mechanical Surface Detection)
Electronics: DAE4 Sn649; Calibrated: 2/21/2011
Phantom: SAM Sub; Type: SAM 4.0; Serial: TP-1403
Measurement SW: DASY4, V4.7 Build 80; Postprocessing SW: SEMCAD, V1.8 Build 186

## Mode: GSM 850, Right Head, Tilt, Mid.ch

**Area Scan (7x14x1):** Measurement grid: dx=15mm, dy=15mm
**Zoom Scan (5x5x7)/Cube 0:** Measurement grid: dx=8mm, dy=8mm, dz=5mm
Reference Value = 9.85 V/m
Peak SAR (extrapolated) = 0.100 W/kg
**SAR(1 g) = 0.080 mW/g; SAR(10 g) = 0.062 mW/g**

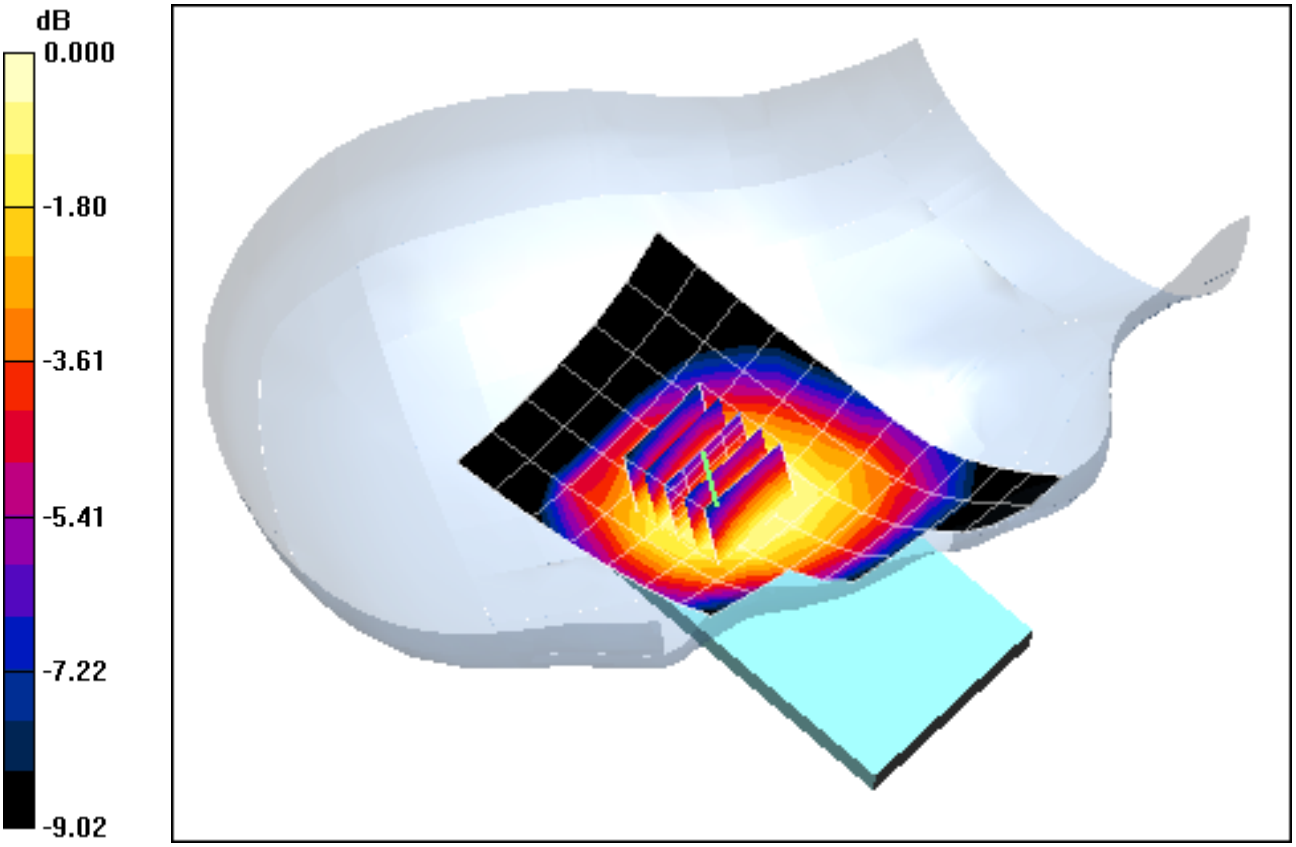


0 dB = 0.084mW/g

# PCTEST ENGINEERING LABORATORY, INC.

**DUT: A3LGTI9100P; Type: 850/1900 GSM/GPRS/EDGE/WCDMA/HSPA Phone with Bluetooth, WLAN and NFC; Serial: FI-167-A**

Communication System: GSM850; Frequency: 836.6 MHz;Duty Cycle: 1:8.3
Medium: 835 Head Medium parameters used (interpolated):
f = 836.6 MHz; $\sigma$ = 0.86 mho/m; $\varepsilon_r$ = 40.3; $\rho$ = 1000 kg/m$^3$
Phantom section: Left Section

Test Date: 07-25-2011; Ambient Temp: 23.6 °C; Tissue Temp: 21.8 °C

Probe: ES3DV3 - SN3258; ConvF(6.18, 6.18, 6.18); Calibrated: 4/8/2011
Sensor-Surface: 4mm (Mechanical Surface Detection)
Electronics: DAE4 Sn649; Calibrated: 2/21/2011
Phantom: SAM Sub; Type: SAM 4.0; Serial: TP-1403
Measurement SW: DASY4, V4.7 Build 80; Postprocessing SW: SEMCAD, V1.8 Build 186

## Mode: GSM 850, Left Head, Touch, Mid.ch

**Area Scan (7x14x1):** Measurement grid: dx=15mm, dy=15mm
**Zoom Scan (5x5x7)/Cube 0:** Measurement grid: dx=8mm, dy=8mm, dz=5mm
Reference Value = 3.07 V/m
Peak SAR (extrapolated) = 0.120 W/kg
**SAR(1 g) = 0.096 mW/g; SAR(10 g) = 0.072 mW/g**

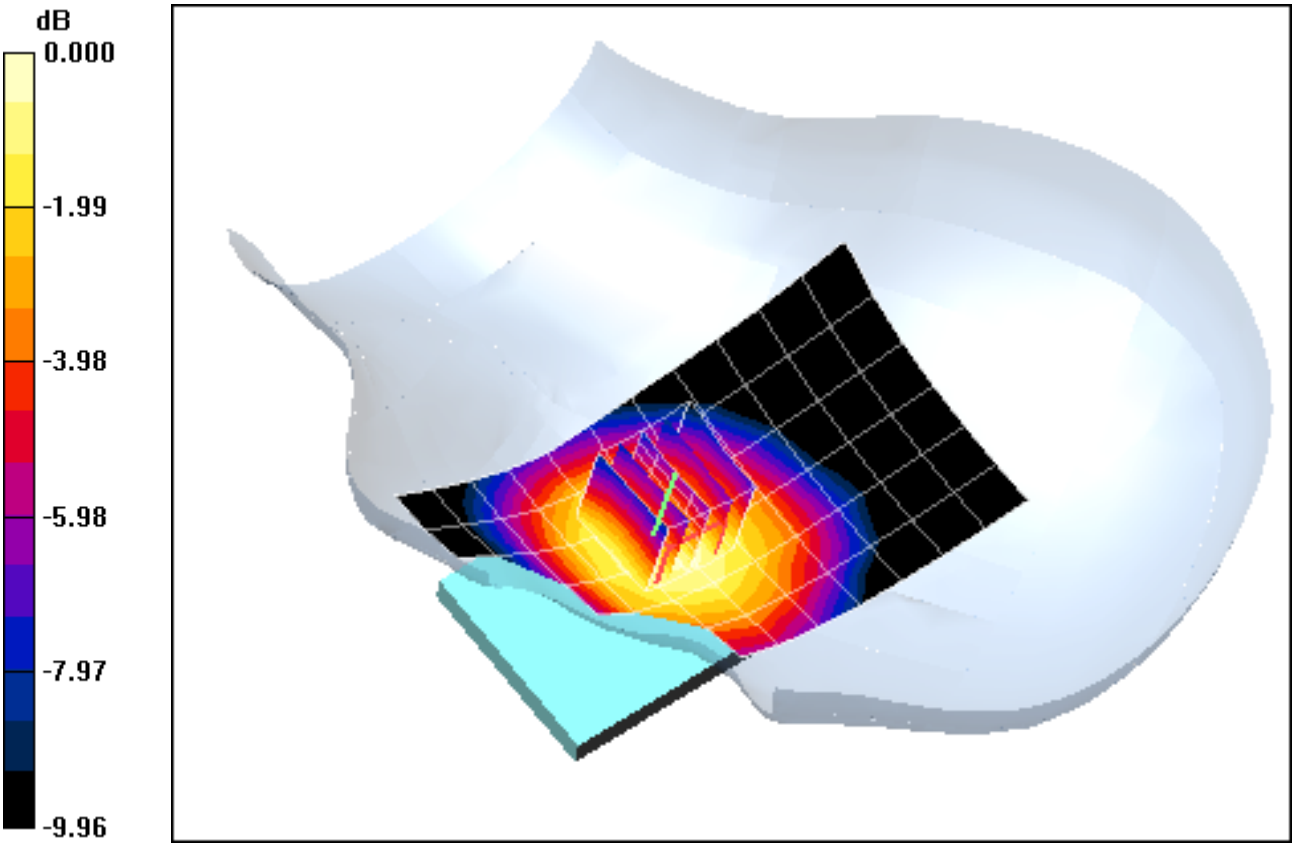


0 dB = 0.101mW/g

# PCTEST ENGINEERING LABORATORY, INC.

**DUT: A3LGTI9100P; Type: 850/1900 GSM/GPRS/EDGE/WCDMA/HSPA Phone with Bluetooth, WLAN and NFC; Serial: FI-167-A**

Communication System: GSM850; Frequency: 836.6 MHz;Duty Cycle: 1:8.3
Medium: 835 Head Medium parameters used (interpolated):
f = 836.6 MHz; $\sigma$ = 0.86 mho/m; $\varepsilon_r$ = 40.3; $\rho$ = 1000 kg/m$^3$
Phantom section: Left Section

Test Date: 07-25-2011; Ambient Temp: 23.6 °C; Tissue Temp: 21.8 °C

Probe: ES3DV3 - SN3258; ConvF(6.18, 6.18, 6.18); Calibrated: 4/8/2011
Sensor-Surface: 4mm (Mechanical Surface Detection)
Electronics: DAE4 Sn649; Calibrated: 2/21/2011
Phantom: SAM Sub; Type: SAM 4.0; Serial: TP-1403
Measurement SW: DASY4, V4.7 Build 80; Postprocessing SW: SEMCAD, V1.8 Build 186

**Mode: GSM 850, Left Head, Tilt, Mid.ch**

**Area Scan (7x14x1):** Measurement grid: dx=15mm, dy=15mm
**Zoom Scan (5x5x7)/Cube 0:** Measurement grid: dx=8mm, dy=8mm, dz=5mm
Reference Value = 5.74 V/m
Peak SAR (extrapolated) = 0.084 W/kg
**SAR(1 g) = 0.067 mW/g; SAR(10 g) = 0.051 mW/g**

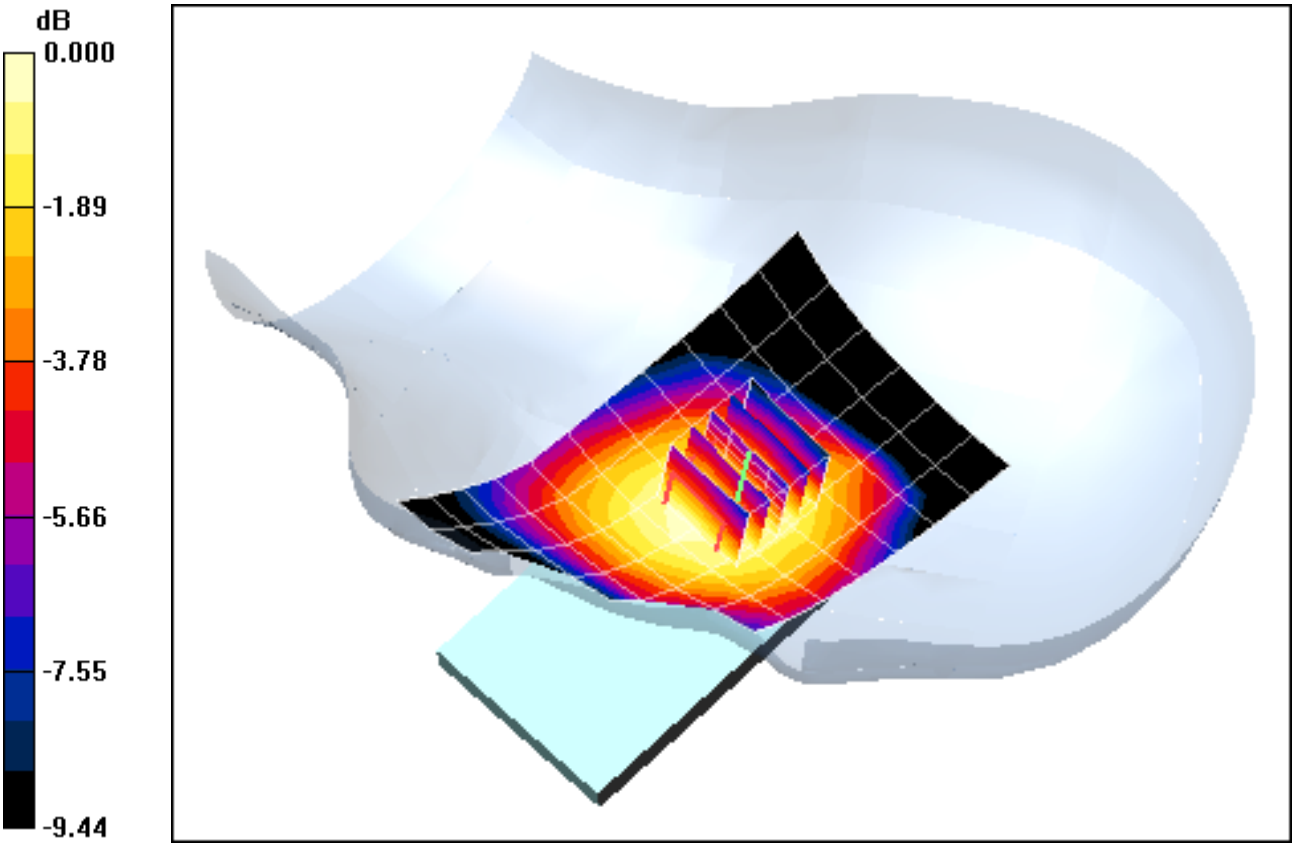


0 dB = 0.069mW/g

# PCTEST ENGINEERING LABORATORY, INC.

**DUT: A3LGTI9100P; Type: 850/1900 GSM/GPRS/EDGE/WCDMA/HSPA Phone with Bluetooth, WLAN, and NFC; Serial: FI-167-A**

Communication System: GSM1900; Frequency: 1880 MHz;Duty Cycle: 1:8.3
Medium: 1900 Head Medium parameters used:
f = 1880 MHz; $\sigma$ = 1.44 mho/m; $\varepsilon_r$ = 41.48; $\rho$ = 1000 kg/m$^3$
Phantom section: Right Section

Test Date: 07-26-2011; Ambient Temp: 23.8°C; Tissue Temp: 21.9°C

Probe: ES3DV2 - SN3022; ConvF(4.83, 4.83, 4.83); Calibrated: 9/21/2010
Sensor-Surface: 4mm (Mechanical Surface Detection)
Electronics: DAE4 Sn704; Calibrated: 3/17/2011
Phantom: SAM Sub Dasy B; Type: SAM 4.0; Serial: TP-1626
Measurement SW: DASY4, V4.7 Build 80; Postprocessing SW: SEMCAD, V1.8 Build 186

## Mode: GSM 1900, Right Head, Touch, Mid.ch

**Area Scan (7x14x1):** Measurement grid: dx=15mm, dy=15mm
**Zoom Scan (5x5x7)/Cube 0:** Measurement grid: dx=8mm, dy=8mm, dz=5mm
Reference Value = 10.3 V/m
Peak SAR (extrapolated) = 0.236 W/kg
**SAR(1 g) = 0.145 mW/g; SAR(10 g) = 0.086 mW/g**

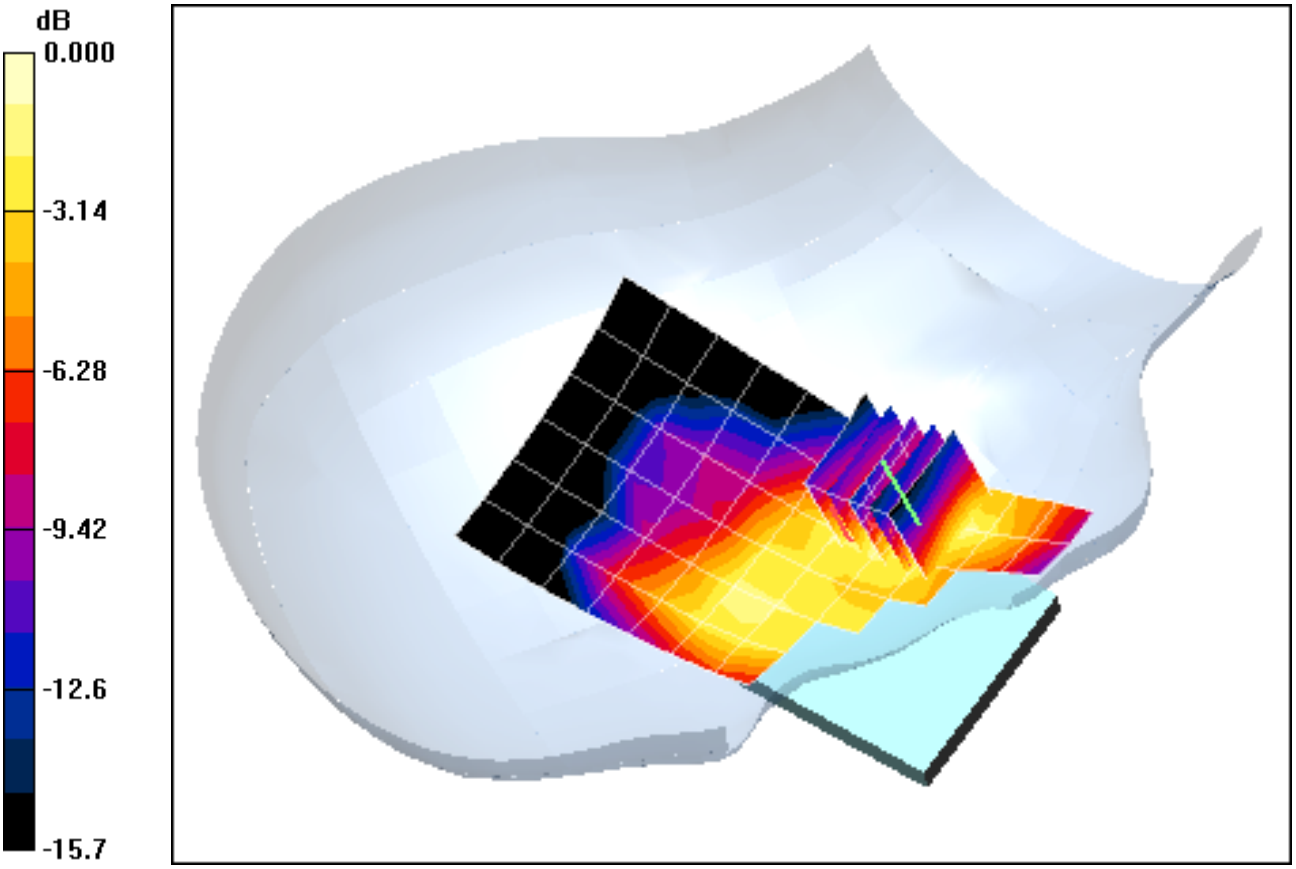


0 dB = 0.158mW/g

# PCTEST ENGINEERING LABORATORY, INC.

**DUT: A3LGTI9100P; Type: 850/1900 GSM/GPRS/EDGE/WCDMA/HSPA Phone with Bluetooth, WLAN, and NFC; Serial: FI-167-A**

Communication System: GSM1900; Frequency: 1880 MHz;Duty Cycle: 1:8.3
Medium: 1900 Head Medium parameters used:
f = 1880 MHz; $\sigma$ = 1.44 mho/m; $\varepsilon_r$ = 41.48; $\rho$ = 1000 kg/m$^3$
Phantom section: Right Section

Test Date: 07-26-2011; Ambient Temp: 23.8°C; Tissue Temp: 21.9°C

Probe: ES3DV2 - SN3022; ConvF(4.83, 4.83, 4.83); Calibrated: 9/21/2010
Sensor-Surface: 4mm (Mechanical Surface Detection)
Electronics: DAE4 Sn704; Calibrated: 3/17/2011
Phantom: SAM Sub Dasy B; Type: SAM 4.0; Serial: TP-1626
Measurement SW: DASY4, V4.7 Build 80; Postprocessing SW: SEMCAD, V1.8 Build 186

**Mode: GSM 1900, Right Head, Tilt, Mid.ch**

**Area Scan (7x14x1):** Measurement grid: dx=15mm, dy=15mm
**Zoom Scan (5x5x7)/Cube 0:** Measurement grid: dx=8mm, dy=8mm, dz=5mm
Reference Value = 4.65 V/m
Peak SAR (extrapolated) = 0.051 W/kg
**SAR(1 g) = 0.030 mW/g; SAR(10 g) = 0.017 mW/g**

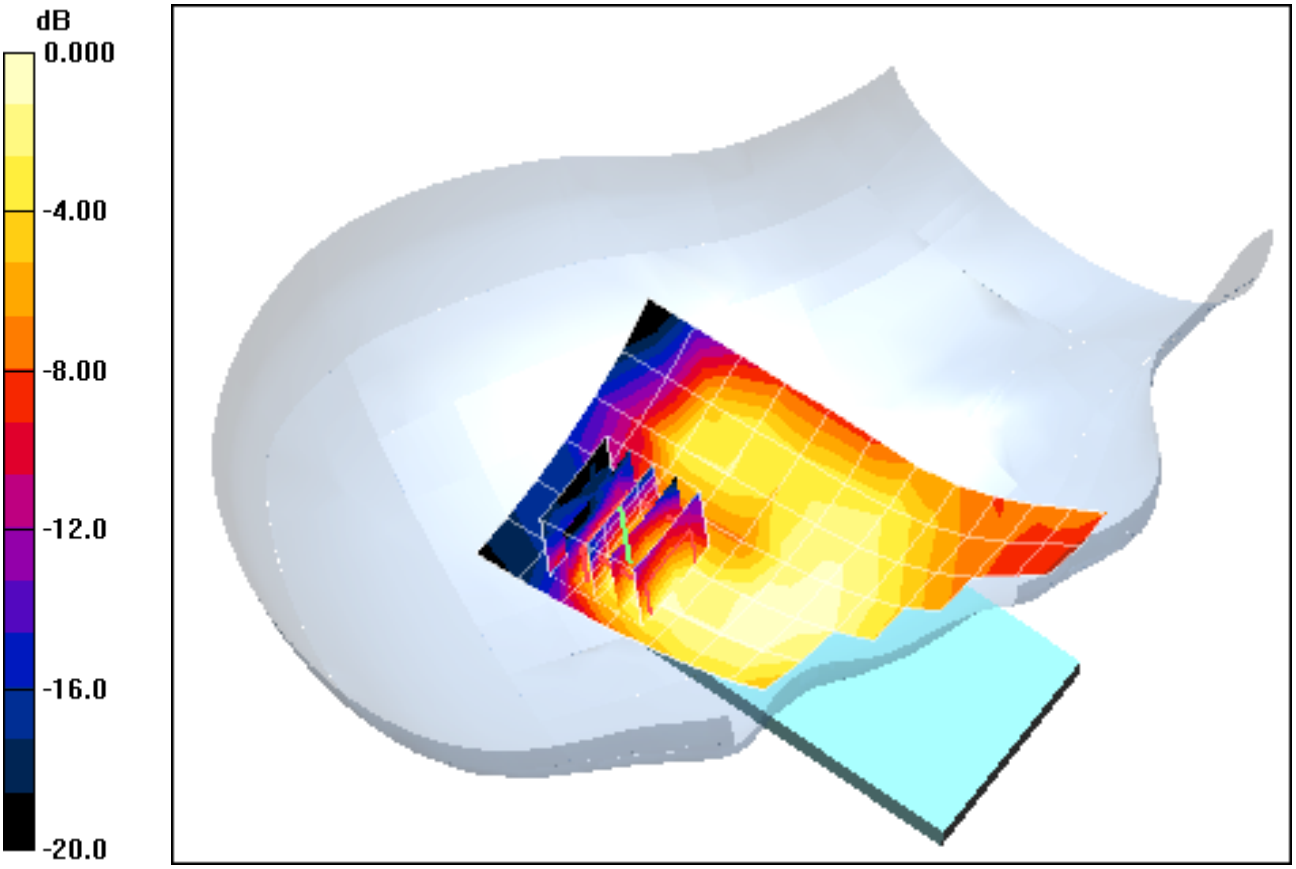


0 dB = 0.034mW/g

# PCTEST ENGINEERING LABORATORY, INC.

**DUT: A3LGTI9100P; Type: 850/1900 GSM/GPRS/EDGE/WCDMA/HSPA Phone with Bluetooth, WLAN, and NFC; Serial: FI-167-A**

Communication System: GSM1900; Frequency: 1880 MHz;Duty Cycle: 1:8.3
Medium: 1900 Head Medium parameters used:
f = 1880 MHz; $\sigma$ = 1.44 mho/m; $\varepsilon_r$ = 41.48; $\rho$ = 1000 kg/m$^3$
Phantom section: Left Section

Test Date: 07-26-2011; Ambient Temp: 23.8°C; Tissue Temp: 21.9°C

Probe: ES3DV2 - SN3022; ConvF(4.83, 4.83, 4.83); Calibrated: 9/21/2010
Sensor-Surface: 4mm (Mechanical Surface Detection)
Electronics: DAE4 Sn704; Calibrated: 3/17/2011
Phantom: SAM Sub Dasy B; Type: SAM 4.0; Serial: TP-1626
Measurement SW: DASY4, V4.7 Build 80; Postprocessing SW: SEMCAD, V1.8 Build 186

**Mode: GSM 1900, Left Head, Touch, Mid.ch**

**Area Scan (7x14x1):** Measurement grid: dx=15mm, dy=15mm
**Zoom Scan (5x5x7)/Cube 0:** Measurement grid: dx=8mm, dy=8mm, dz=5mm
Reference Value = 12.5 V/m
Peak SAR (extrapolated) = 0.318 W/kg
**SAR(1 g) = 0.209 mW/g; SAR(10 g) = 0.130 mW/g**

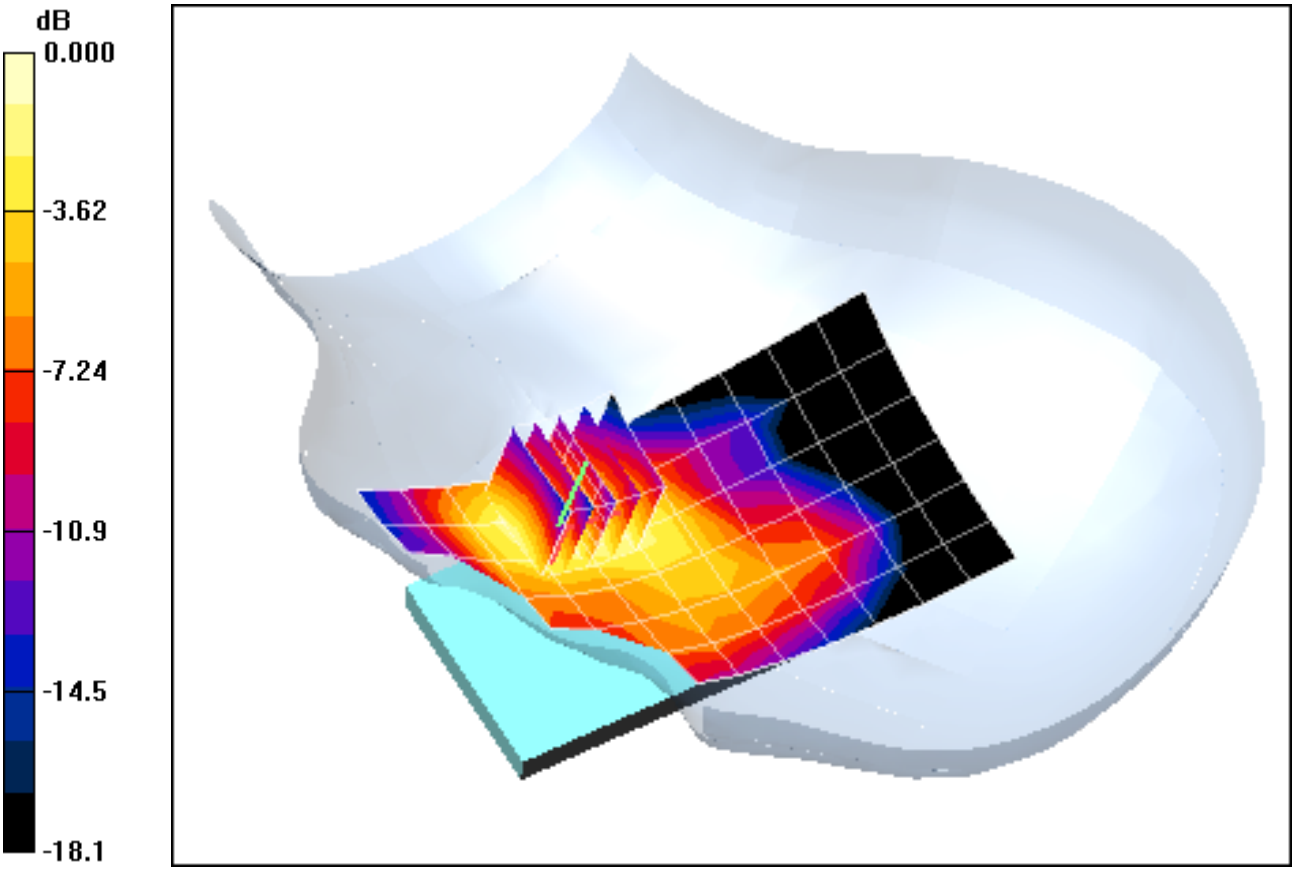


0 dB = 0.230mW/g

# PCTEST ENGINEERING LABORATORY, INC.

**DUT: A3LGTI9100P; Type: 850/1900 GSM/GPRS/EDGE/WCDMA/HSPA Phone with Bluetooth, WLAN, and NFC; Serial: FI-167-A**

Communication System: GSM1900; Frequency: 1880 MHz;Duty Cycle: 1:8.3
Medium: 1900 Head Medium parameters used:
f = 1880 MHz; $\sigma$ = 1.44 mho/m; $\varepsilon_r$ = 41.48; $\rho$ = 1000 kg/m$^3$
Phantom section: Left Section

Test Date: 07-26-2011; Ambient Temp: 23.8°C; Tissue Temp: 21.9°C

Probe: ES3DV2 - SN3022; ConvF(4.83, 4.83, 4.83); Calibrated: 9/21/2010
Sensor-Surface: 4mm (Mechanical Surface Detection)
Electronics: DAE4 Sn704; Calibrated: 3/17/2011
Phantom: SAM Sub Dasy B; Type: SAM 4.0; Serial: TP-1626
Measurement SW: DASY4, V4.7 Build 80; Postprocessing SW: SEMCAD, V1.8 Build 186

## Mode: GSM 1900, Left Head, Tilt, Mid.ch

**Area Scan (7x14x1):** Measurement grid: dx=15mm, dy=15mm
**Zoom Scan (5x5x7)/Cube 0:** Measurement grid: dx=8mm, dy=8mm, dz=5mm
Reference Value = 5.78 V/m
Peak SAR (extrapolated) = 0.069 W/kg
**SAR(1 g) = 0.046 mW/g; SAR(10 g) = 0.028 mW/g**

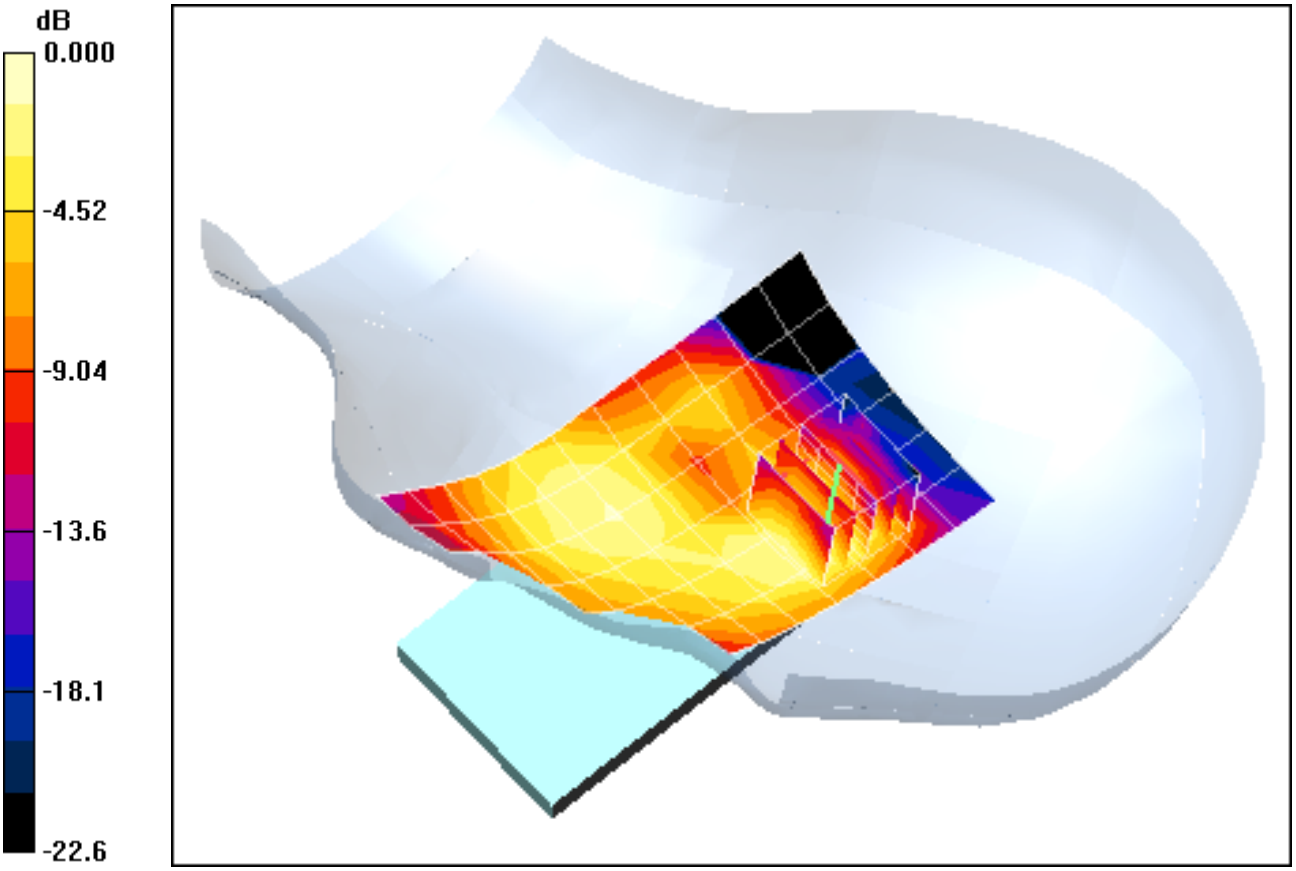


0 dB = 0.050mW/g

# PCTEST ENGINEERING LABORATORY, INC.

**DUT: A3LGTI9100P; Type: 850/1900 GSM/GPRS/EDGE/WCDMA/HSPA Phone with Bluetooth, WLAN and NFC; Serial: FI-167-A**

Communication System: WCDMA850; Frequency: 836.6 MHz;Duty Cycle: 1:1
Medium: 835 Head Medium parameters used (interpolated):
f = 836.6 MHz; $\sigma$ = 0.86 mho/m; $\varepsilon_r$ = 40.3; $\rho$ = 1000 kg/m$^3$
Phantom section: Right Section

Test Date: 07-25-2011; Ambient Temp: 23.6 °C; Tissue Temp: 21.8 °C

Probe: ES3DV3 - SN3258; ConvF(6.18, 6.18, 6.18); Calibrated: 4/8/2011
Sensor-Surface: 4mm (Mechanical Surface Detection)
Electronics: DAE4 Sn649; Calibrated: 2/21/2011
Phantom: SAM Sub; Type: SAM 4.0; Serial: TP-1403
Measurement SW: DASY4, V4.7 Build 80; Postprocessing SW: SEMCAD, V1.8 Build 186

## Mode: WCDMA 850, Right Head, Touch, Mid.ch

**Area Scan (7x10x1):** Measurement grid: dx=15mm, dy=15mm
**Zoom Scan (5x5x7)/Cube 0:** Measurement grid: dx=8mm, dy=8mm, dz=5mm
Reference Value = 11.5 V/m
Peak SAR (extrapolated) = 0.142 W/kg
**SAR(1 g) = 0.108 mW/g; SAR(10 g) = 0.081 mW/g**

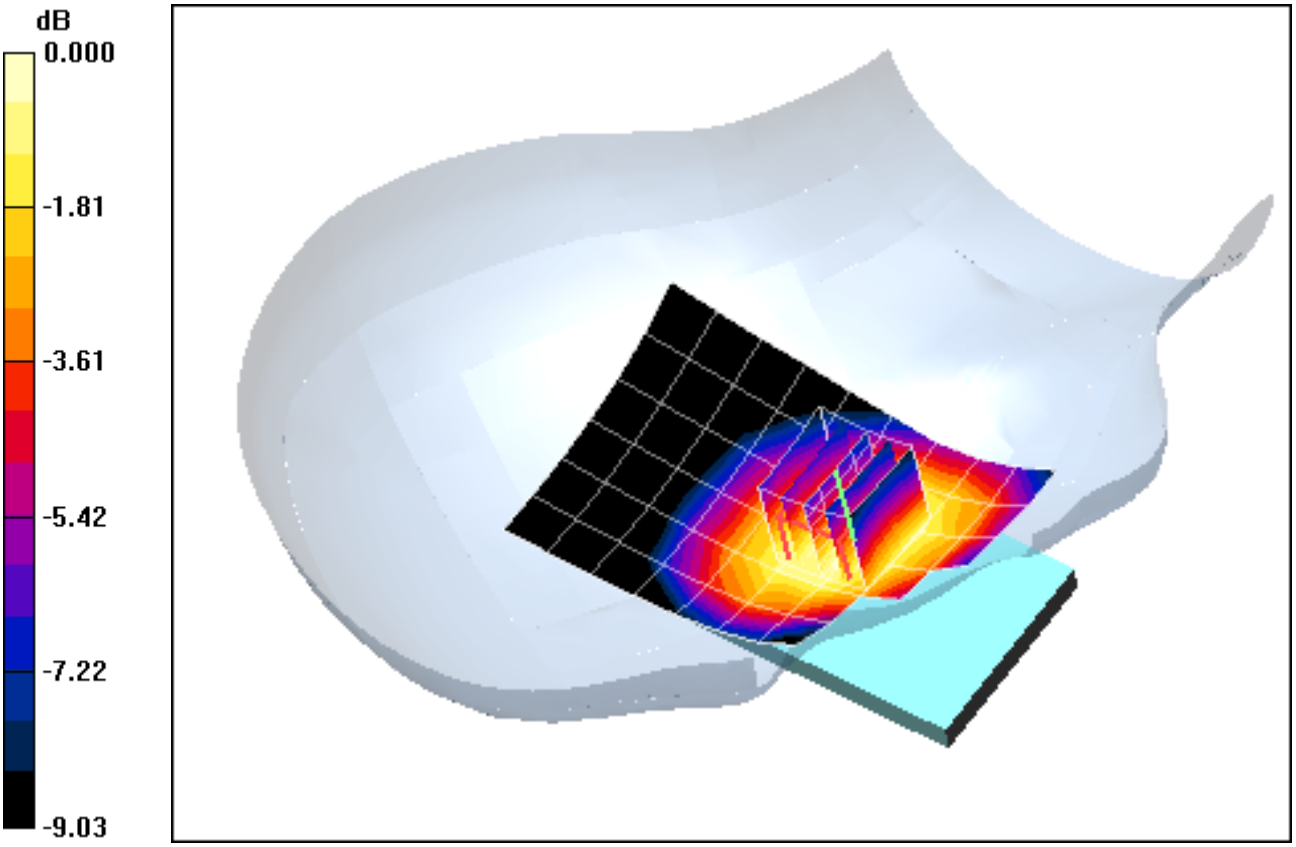


0 dB = 0.114mW/g

# PCTEST ENGINEERING LABORATORY, INC.

**DUT: A3LGTI9100P; Type: 850/1900 GSM/GPRS/EDGE/WCDMA/HSPA Phone with Bluetooth, WLAN and NFC; Serial: FI-167-A**

Communication System: WCDMA850; Frequency: 836.6 MHz;Duty Cycle: 1:1
Medium: 835 Head Medium parameters used (interpolated):
f = 836.6 MHz; $\sigma$ = 0.86 mho/m; $\varepsilon_r$ = 40.3; $\rho$ = 1000 kg/m$^3$
Phantom section: Right Section

Test Date: 07-25-2011; Ambient Temp: 23.6 °C; Tissue Temp: 21.8 °C

Probe: ES3DV3 - SN3258; ConvF(6.18, 6.18, 6.18); Calibrated: 4/8/2011
Sensor-Surface: 4mm (Mechanical Surface Detection)
Electronics: DAE4 Sn649; Calibrated: 2/21/2011
Phantom: SAM Sub; Type: SAM 4.0; Serial: TP-1403
Measurement SW: DASY4, V4.7 Build 80; Postprocessing SW: SEMCAD, V1.8 Build 186

## Mode: WCDMA 850, Right Head, Tilt, Mid.ch

**Area Scan (7x10x1):** Measurement grid: dx=15mm, dy=15mm
**Zoom Scan (5x5x7)/Cube 0:** Measurement grid: dx=8mm, dy=8mm, dz=5mm
Reference Value = 9.32 V/m
Peak SAR (extrapolated) = 0.088 W/kg
**SAR(1 g) = 0.071 mW/g; SAR(10 g) = 0.055 mW/g**

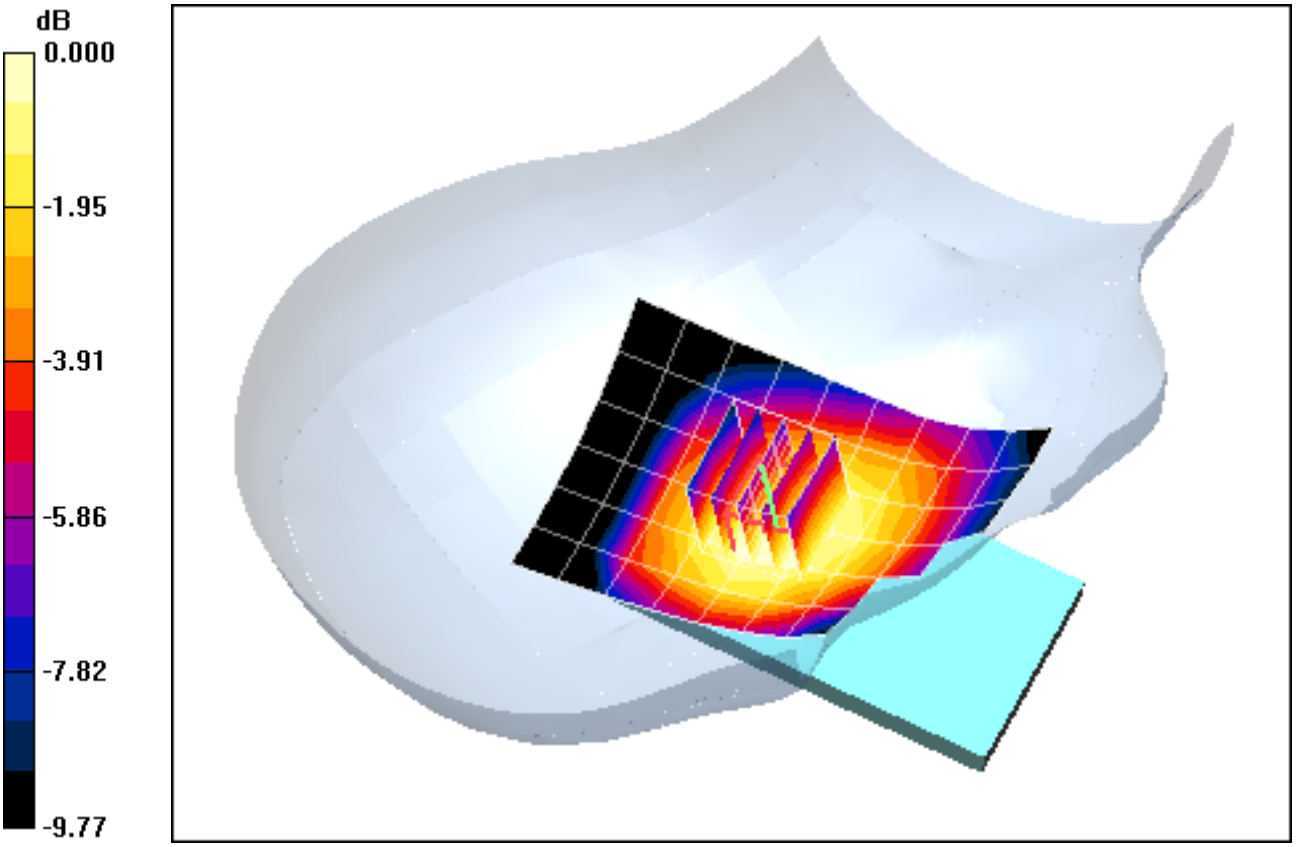


0 dB = 0.074mW/g

# PCTEST ENGINEERING LABORATORY, INC.

**DUT: A3LGTI9100P; Type: 850/1900 GSM/GPRS/EDGE/WCDMA/HSPA Phone with Bluetooth, WLAN and NFC; Serial: FI-167-A**

Communication System: WCDMA850; Frequency: 836.6 MHz;Duty Cycle: 1:1
Medium: 835 Head Medium parameters used (interpolated):
f = 836.6 MHz; $\sigma$ = 0.86 mho/m; $\varepsilon_r$ = 40.3; $\rho$ = 1000 kg/m$^3$
Phantom section: Left Section

Test Date: 07-25-2011; Ambient Temp: 23.6 °C; Tissue Temp: 21.8 °C

Probe: ES3DV3 - SN3258; ConvF(6.18, 6.18, 6.18); Calibrated: 4/8/2011
Sensor-Surface: 4mm (Mechanical Surface Detection)
Electronics: DAE4 Sn649; Calibrated: 2/21/2011
Phantom: SAM Sub; Type: SAM 4.0; Serial: TP-1403
Measurement SW: DASY4, V4.7 Build 80; Postprocessing SW: SEMCAD, V1.8 Build 186

## Mode: WCDMA 850, Left Head, Touch, Mid.ch

**Area Scan (7x10x1):** Measurement grid: dx=15mm, dy=15mm
**Zoom Scan (5x5x7)/Cube 0:** Measurement grid: dx=8mm, dy=8mm, dz=5mm
Reference Value = 2.57 V/m
Peak SAR (extrapolated) = 0.112 W/kg
**SAR(1 g) = 0.090 mW/g; SAR(10 g) = 0.068 mW/g**

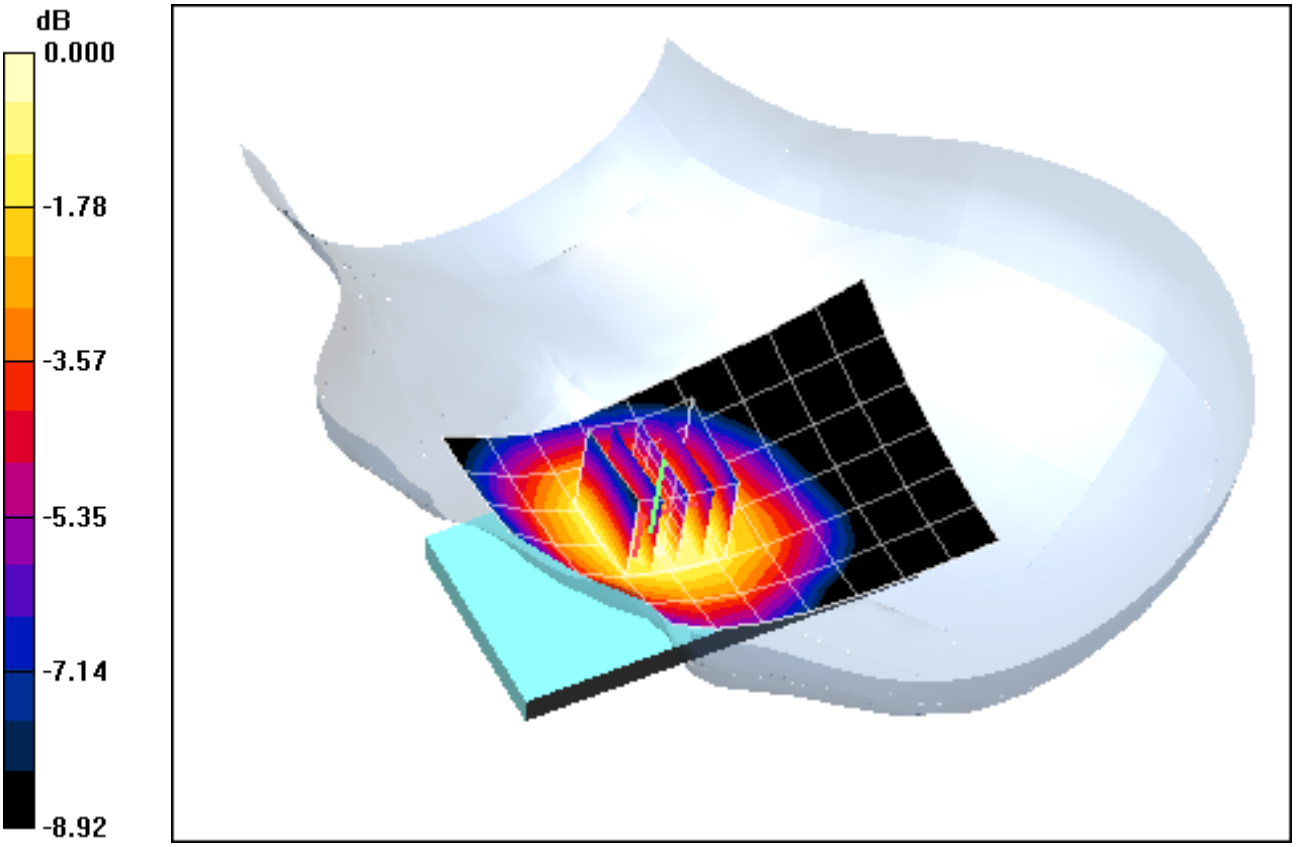


0 dB = 0.094mW/g

# PCTEST ENGINEERING LABORATORY, INC.

**DUT: A3LGTI9100P; Type: 850/1900 GSM/GPRS/EDGE/WCDMA/HSPA Phone with Bluetooth, WLAN and NFC; Serial: FI-167-A**

Communication System: WCDMA850; Frequency: 836.6 MHz;Duty Cycle: 1:1
Medium: 835 Head Medium parameters used (interpolated):
f = 836.6 MHz; $\sigma$ = 0.86 mho/m; $\varepsilon_r$ = 40.3; $\rho$ = 1000 kg/m$^3$
Phantom section: Left Section

Test Date: 07-25-2011; Ambient Temp: 23.6 °C; Tissue Temp: 21.8 °C

Probe: ES3DV3 - SN3258; ConvF(6.18, 6.18, 6.18); Calibrated: 4/8/2011
Sensor-Surface: 4mm (Mechanical Surface Detection)
Electronics: DAE4 Sn649; Calibrated: 2/21/2011
Phantom: SAM Sub; Type: SAM 4.0; Serial: TP-1403
Measurement SW: DASY4, V4.7 Build 80; Postprocessing SW: SEMCAD, V1.8 Build 186

## Mode: WCDMA 850, Left Head, Tilt, Mid.ch

**Area Scan (7x10x1):** Measurement grid: dx=15mm, dy=15mm
**Zoom Scan (5x5x7)/Cube 0:** Measurement grid: dx=8mm, dy=8mm, dz=5mm
Reference Value = 5.22 V/m
Peak SAR (extrapolated) = 0.078 W/kg
**SAR(1 g) = 0.062 mW/g; SAR(10 g) = 0.048 mW/g**

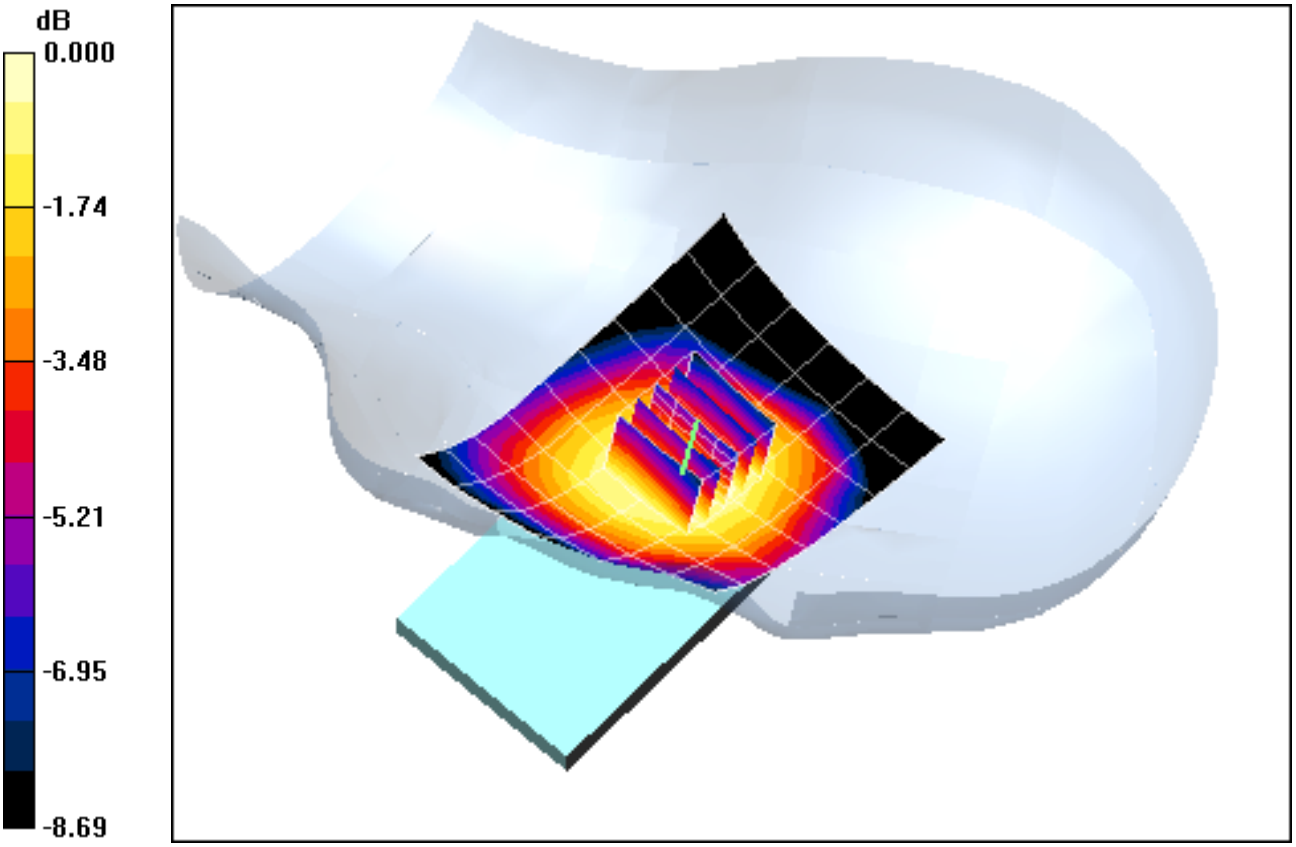


0 dB = 0.065mW/g

# PCTEST ENGINEERING LABORATORY, INC.

**DUT: A3LGTI9100P; Type: 850/1900 GSM/GPRS/EDGE/WCDMA/HSPA Phone with Bluetooth, WLAN, and NFC; Serial: FI-167-A**

Communication System: WCDMA1900; Frequency: 1880 MHz;Duty Cycle: 1:1
Medium: 1900 Head Medium parameters used:
f = 1880 MHz; $\sigma$ = 1.44 mho/m; $\varepsilon_r$ = 41.48; $\rho$ = 1000 kg/m$^3$
Phantom section: Right Section

Test Date: 07-26-2011; Ambient Temp: 23.8°C; Tissue Temp: 21.9°C

Probe: ES3DV2 - SN3022; ConvF(4.83, 4.83, 4.83); Calibrated: 9/21/2010
Sensor-Surface: 4mm (Mechanical Surface Detection)
Electronics: DAE4 Sn704; Calibrated: 3/17/2011
Phantom: SAM Sub Dasy B; Type: SAM 4.0; Serial: TP-1626
Measurement SW: DASY4, V4.7 Build 80; Postprocessing SW: SEMCAD, V1.8 Build 186

## Mode: WCDMA 1900, Right Head, Touch, Mid.ch

**Area Scan (7x10x1):** Measurement grid: dx=15mm, dy=15mm
**Zoom Scan (5x5x7)/Cube 0:** Measurement grid: dx=8mm, dy=8mm, dz=5mm
Reference Value = 13.6 V/m
Peak SAR (extrapolated) = 0.409 W/kg
**SAR(1 g) = 0.255 mW/g; SAR(10 g) = 0.151 mW/g**

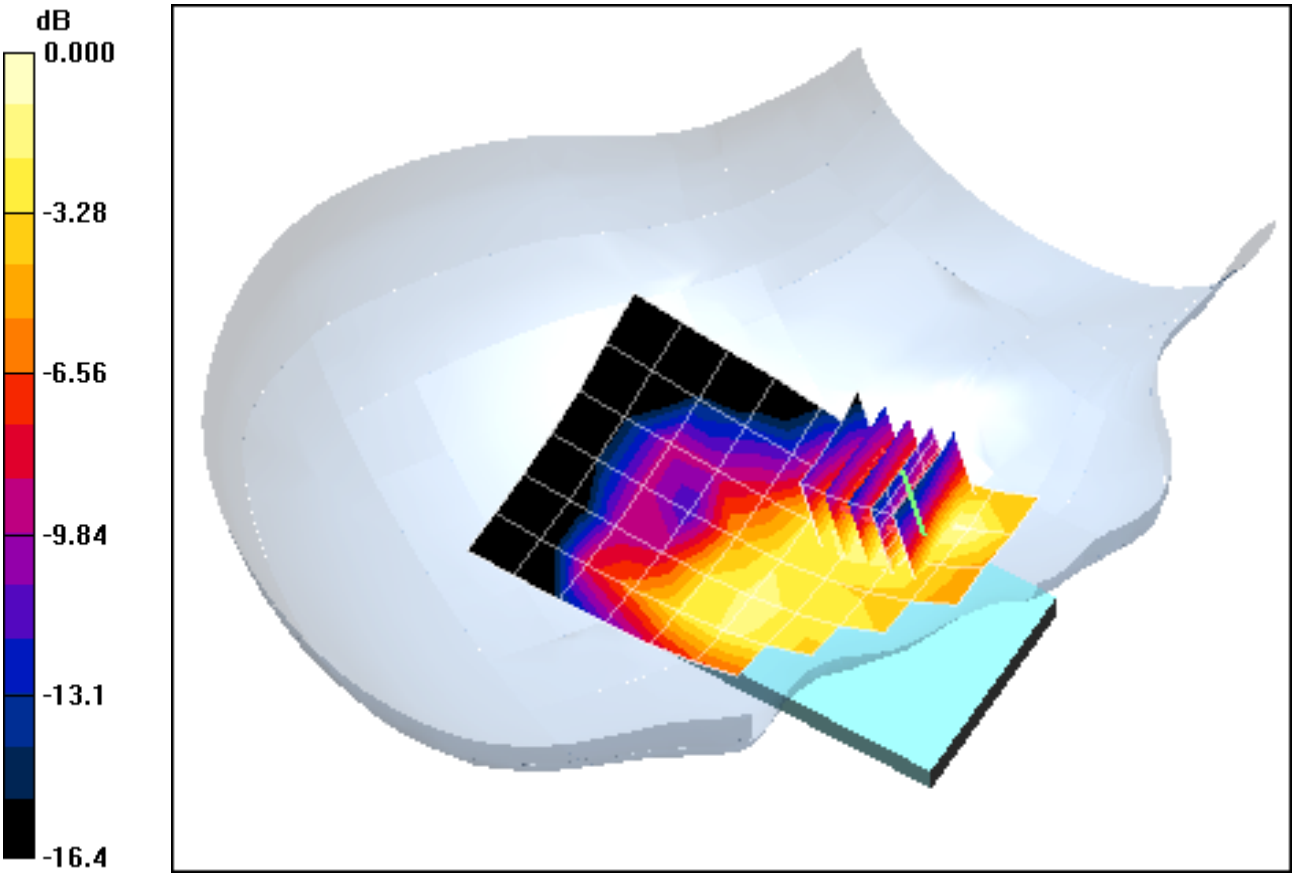


0 dB = 0.282mW/g

# PCTEST ENGINEERING LABORATORY, INC.

**DUT: A3LGTI9100P; Type: 850/1900 GSM/GPRS/EDGE/WCDMA/HSPA Phone with Bluetooth, WLAN, and NFC; Serial: FI-167-A**

Communication System: WCDMA1900; Frequency: 1880 MHz;Duty Cycle: 1:1
Medium: 1900 Head Medium parameters used:
f = 1880 MHz; $\sigma$ = 1.44 mho/m; $\varepsilon_r$ = 41.48; $\rho$ = 1000 kg/m$^3$
Phantom section: Right Section

Test Date: 07-26-2011; Ambient Temp: 23.8°C; Tissue Temp: 21.9°C

Probe: ES3DV2 - SN3022; ConvF(4.83, 4.83, 4.83); Calibrated: 9/21/2010
Sensor-Surface: 4mm (Mechanical Surface Detection)
Electronics: DAE4 Sn704; Calibrated: 3/17/2011
Phantom: SAM Sub Dasy B; Type: SAM 4.0; Serial: TP-1626
Measurement SW: DASY4, V4.7 Build 80; Postprocessing SW: SEMCAD, V1.8 Build 186

## Mode: WCDMA 1900, Right Head, Tilt, Mid.ch

**Area Scan (7x12x1):** Measurement grid: dx=15mm, dy=15mm
**Zoom Scan (5x5x7)/Cube 0:** Measurement grid: dx=8mm, dy=8mm, dz=5mm
Reference Value = 6.18 V/m
Peak SAR (extrapolated) = 0.093 W/kg
**SAR(1 g) = 0.056 mW/g; SAR(10 g) = 0.032 mW/g**

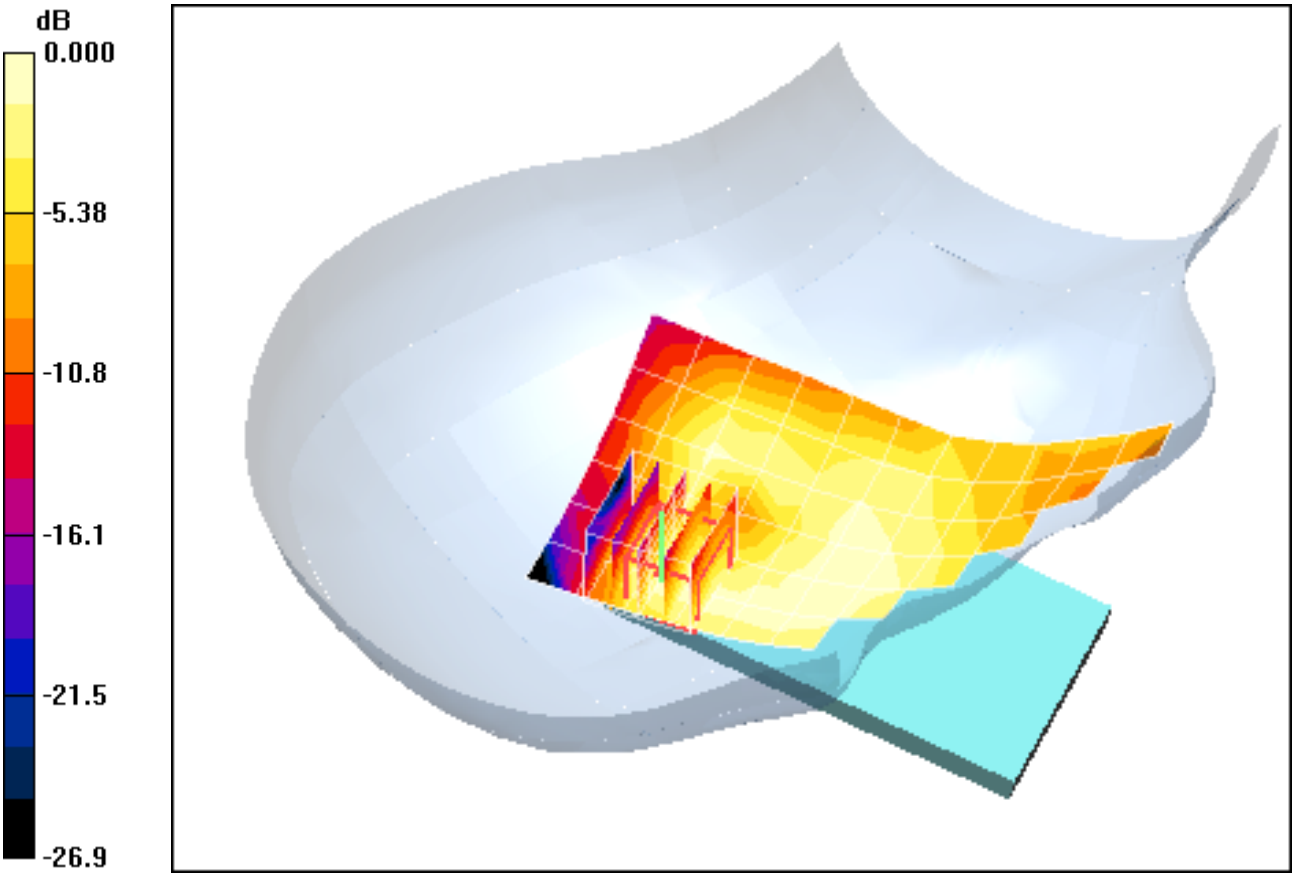


0 dB = 0.061mW/g

# PCTEST ENGINEERING LABORATORY, INC.

**DUT: A3LGTI9100P; Type: 850/1900 GSM/GPRS/EDGE/WCDMA/HSPA Phone with Bluetooth, WLAN, and NFC; Serial: FI-167-A**

Communication System: WCDMA1900; Frequency: 1880 MHz;Duty Cycle: 1:1
Medium: 1900 Head Medium parameters used:
f = 1880 MHz; $\sigma$ = 1.44 mho/m; $\varepsilon_r$ = 41.48; $\rho$ = 1000 kg/m$^3$
Phantom section: Left Section

Test Date: 07-26-2011; Ambient Temp: 23.8°C; Tissue Temp: 21.9°C

Probe: ES3DV2 - SN3022; ConvF(4.83, 4.83, 4.83); Calibrated: 9/21/2010
Sensor-Surface: 4mm (Mechanical Surface Detection)
Electronics: DAE4 Sn704; Calibrated: 3/17/2011
Phantom: SAM Sub Dasy B; Type: SAM 4.0; Serial: TP-1626
Measurement SW: DASY4, V4.7 Build 80; Postprocessing SW: SEMCAD, V1.8 Build 186

## Mode: WCDMA 1900, Left Head, Touch, Mid.ch

**Area Scan (7x10x1):** Measurement grid: dx=15mm, dy=15mm
**Zoom Scan (5x5x7)/Cube 0:** Measurement grid: dx=8mm, dy=8mm, dz=5mm
Reference Value = 16.3 V/m
Peak SAR (extrapolated) = 0.550 W/kg
**SAR(1 g) = 0.366 mW/g; SAR(10 g) = 0.228 mW/g**

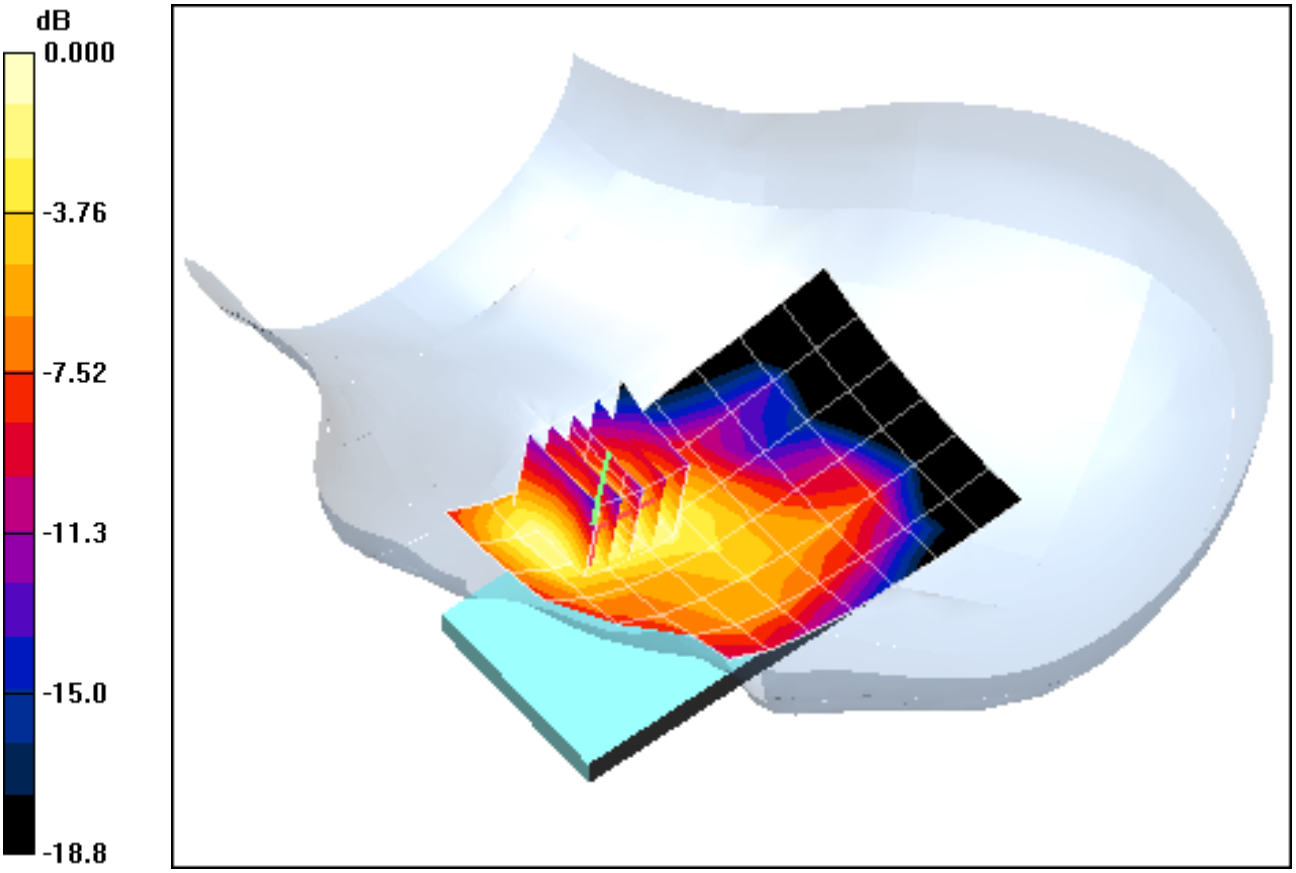


0 dB = 0.400mW/g

# PCTEST ENGINEERING LABORATORY, INC.

**DUT: A3LGTI9100P; Type: 850/1900 GSM/GPRS/EDGE/WCDMA/HSPA Phone with Bluetooth, WLAN, and NFC; Serial: FI-167-A**

Communication System: WCDMA1900; Frequency: 1880 MHz;Duty Cycle: 1:1
Medium: 1900 Head Medium parameters used:
f = 1880 MHz; $\sigma$ = 1.44 mho/m; $\varepsilon_r$ = 41.48; $\rho$ = 1000 kg/m$^3$
Phantom section: Left Section

Test Date: 07-26-2011; Ambient Temp: 23.8°C; Tissue Temp: 21.9°C

Probe: ES3DV2 - SN3022; ConvF(4.83, 4.83, 4.83); Calibrated: 9/21/2010
Sensor-Surface: 4mm (Mechanical Surface Detection)
Electronics: DAE4 Sn704; Calibrated: 3/17/2011
Phantom: SAM Sub Dasy B; Type: SAM 4.0; Serial: TP-1626
Measurement SW: DASY4, V4.7 Build 80; Postprocessing SW: SEMCAD, V1.8 Build 186

## Mode: WCDMA 1900, Left Head, Touch, Mid.ch

**Area Scan (7x10x1):** Measurement grid: dx=15mm, dy=15mm
**Zoom Scan (5x5x7)/Cube 0:** Measurement grid: dx=8mm, dy=8mm, dz=5mm
Reference Value = 16.3 V/m
Peak SAR (extrapolated) = 0.550 W/kg
**SAR(1 g) = 0.366 mW/g; SAR(10 g) = 0.228 mW/g**

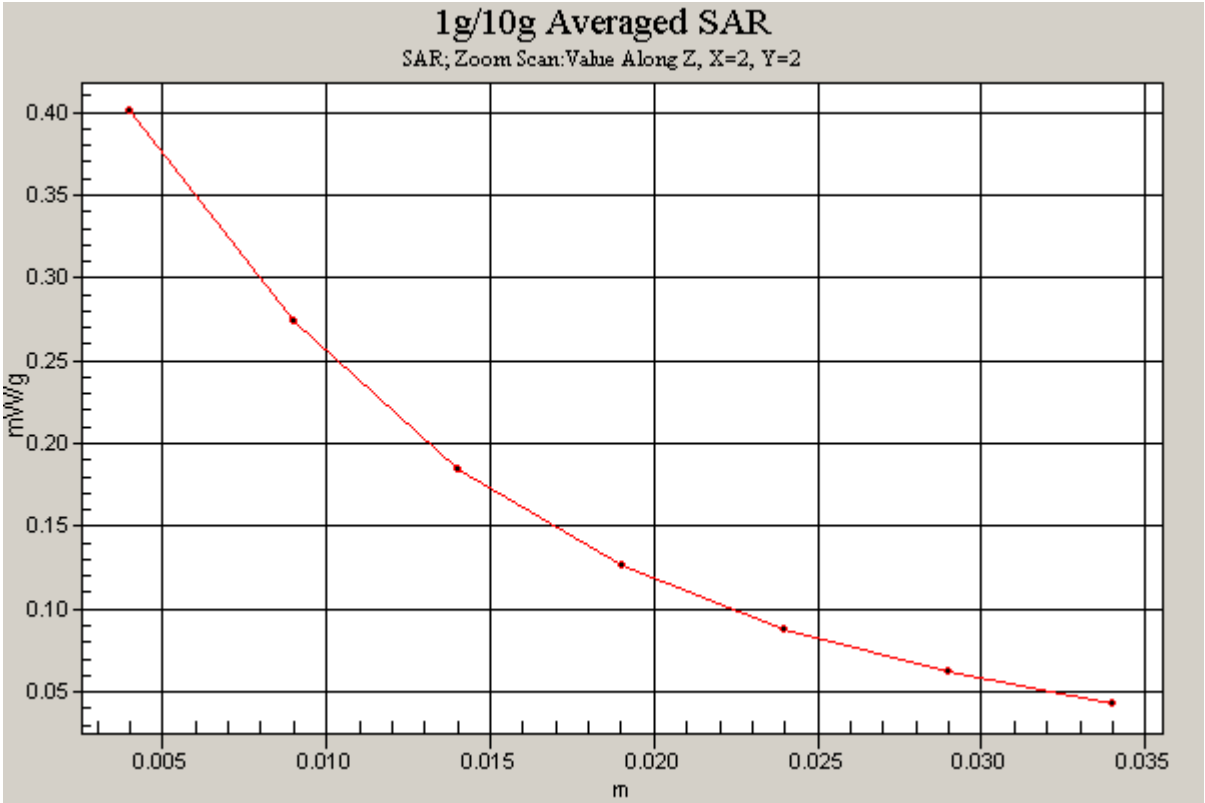

# PCTEST ENGINEERING LABORATORY, INC.

**DUT: A3LGTI9100P; Type: 850/1900 GSM/GPRS/EDGE/WCDMA/HSPA Phone with Bluetooth, WLAN, and NFC; Serial: FI-167-A**

Communication System: WCDMA1900; Frequency: 1880 MHz;Duty Cycle: 1:1
Medium: 1900 Head Medium parameters used:
f = 1880 MHz; $\sigma$ = 1.44 mho/m; $\varepsilon_r$ = 41.48; $\rho$ = 1000 kg/m$^3$
Phantom section: Left Section

Test Date: 07-26-2011; Ambient Temp: 23.8°C; Tissue Temp: 21.9°C

Probe: ES3DV2 - SN3022; ConvF(4.83, 4.83, 4.83); Calibrated: 9/21/2010
Sensor-Surface: 4mm (Mechanical Surface Detection)
Electronics: DAE4 Sn704; Calibrated: 3/17/2011
Phantom: SAM Sub Dasy B; Type: SAM 4.0; Serial: TP-1626
Measurement SW: DASY4, V4.7 Build 80; Postprocessing SW: SEMCAD, V1.8 Build 186

## Mode: WCDMA 1900, Left Head, Tilt, Mid.ch

**Area Scan (7x10x1):** Measurement grid: dx=15mm, dy=15mm
**Zoom Scan (5x5x7)/Cube 0:** Measurement grid: dx=8mm, dy=8mm, dz=5mm
Reference Value = 8.09 V/m
Peak SAR (extrapolated) = 0.135 W/kg
**SAR(1 g) = 0.0895 mW/g; SAR(10 g) = 0.053 mW/g**

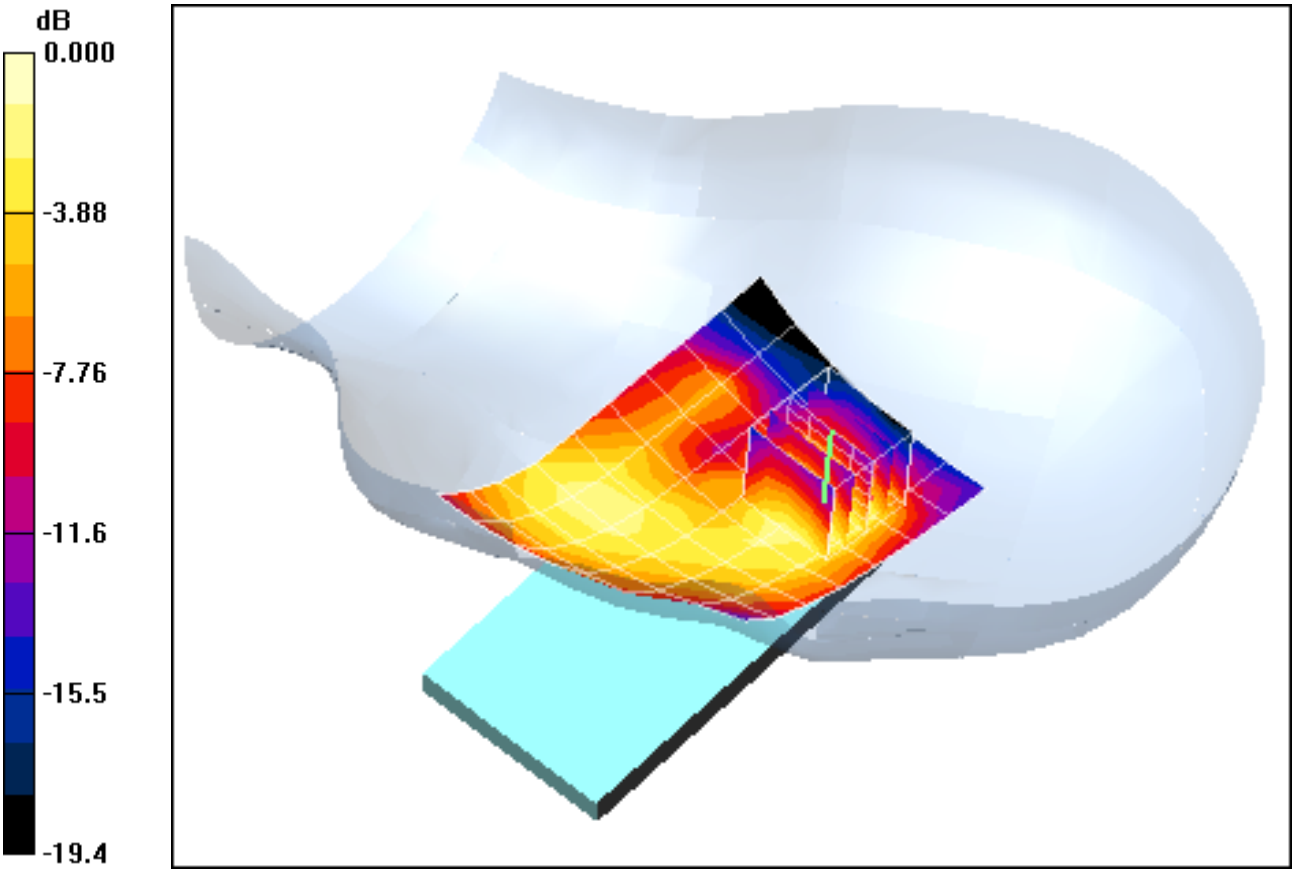


0 dB = 0.098mW/g

# PCTEST ENGINEERING LABORATORY, INC.

**DUT: A3LGTI9100P; Type: 850/1900 GSM/GPRS/EDGE/WCDMA/HSPA Phone with Bluetooth, WLAN, and NFC; Serial: FI-167-A**

Communication System: IEEE 802.11b; Frequency: 2437 MHz;Duty Cycle: 1:1
Medium: 2450 Head Medium parameters used (interpolated):
f = 2437 MHz; $\sigma$ = 1.77 mho/m; $\varepsilon_r$ = 38.9; $\rho$ = 1000 kg/m$^3$
Phantom section: Right Section

Test Date: 07-26-2011; Ambient Temp: 23.6°C; Tissue Temp: 23.5°C

Probe: ES3DV3 - SN3258; ConvF(4.5, 4.5, 4.5); Calibrated: 4/8/2011
Sensor-Surface: 3mm (Mechanical Surface Detection)
Electronics: DAE4 Sn649; Calibrated: 2/21/2011
Phantom: SAM Sub; Type: SAM 4.0; Serial: TP-1357
Measurement SW: DASY4, V4.7 Build 80; Postprocessing SW: SEMCAD, V1.8 Build 186

## Mode: IEEE 802.11b, Right Head, Touch, Ch 06, 1 Mbps

**Area Scan (7x14x1):** Measurement grid: dx=15mm, dy=15mm
**Zoom Scan (5x5x7)/Cube 0:** Measurement grid: dx=8mm, dy=8mm, dz=5mm
Reference Value = 5.66 V/m
Peak SAR (extrapolated) = 0.097 W/kg
**SAR(1 g) = 0.0545 mW/g; SAR(10 g) = 0.030 mW/g**

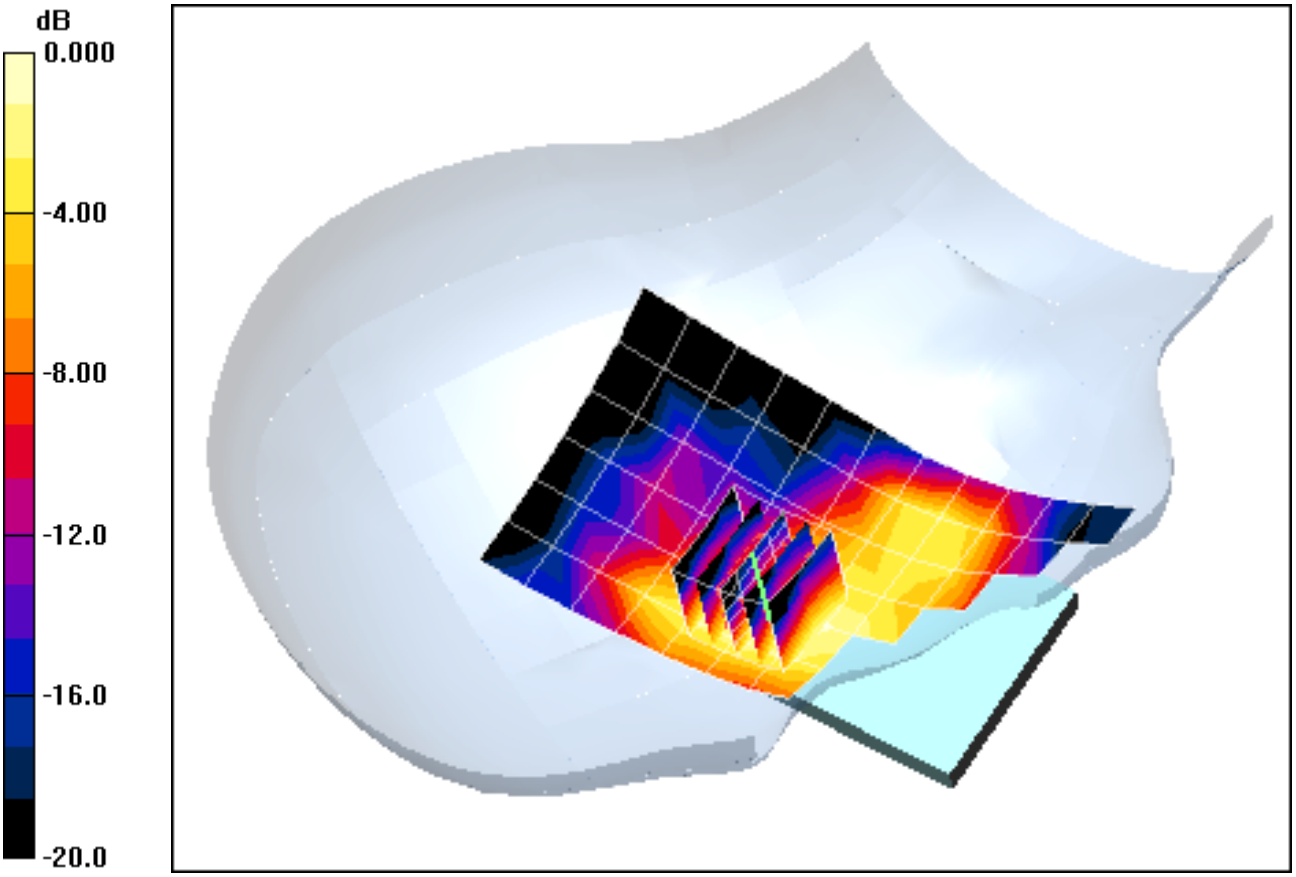


0 dB = 0.067mW/g

# PCTEST ENGINEERING LABORATORY, INC.

**DUT: A3LGTI9100P; Type: 850/1900 GSM/GPRS/EDGE/WCDMA/HSPA Phone with Bluetooth, WLAN, and NFC; Serial: FI-167-A**

Communication System: IEEE 802.11b; Frequency: 2437 MHz;Duty Cycle: 1:1
Medium: 2450 Head Medium parameters used (interpolated):
f = 2437 MHz; $\sigma$ = 1.77 mho/m; $\varepsilon_r$ = 38.9; $\rho$ = 1000 kg/m$^3$
Phantom section: Right Section

Test Date: 07-26-2011; Ambient Temp: 23.6°C; Tissue Temp: 23.5°C

Probe: ES3DV3 - SN3258; ConvF(4.5, 4.5, 4.5); Calibrated: 4/8/2011
Sensor-Surface: 3mm (Mechanical Surface Detection)
Electronics: DAE4 Sn649; Calibrated: 2/21/2011
Phantom: SAM Sub; Type: SAM 4.0; Serial: TP-1357
Measurement SW: DASY4, V4.7 Build 80; Postprocessing SW: SEMCAD, V1.8 Build 186

## Mode: IEEE 802.11b, Right Head, Tilt, Ch 06, 1 Mbps

**Area Scan (7x14x1):** Measurement grid: dx=15mm, dy=15mm
**Zoom Scan (5x5x7)/Cube 0:** Measurement grid: dx=8mm, dy=8mm, dz=5mm
Reference Value = 5.14 V/m
Peak SAR (extrapolated) = 0.082 W/kg
**SAR(1 g) = 0.042 mW/g; SAR(10 g) = 0.021 mW/g**

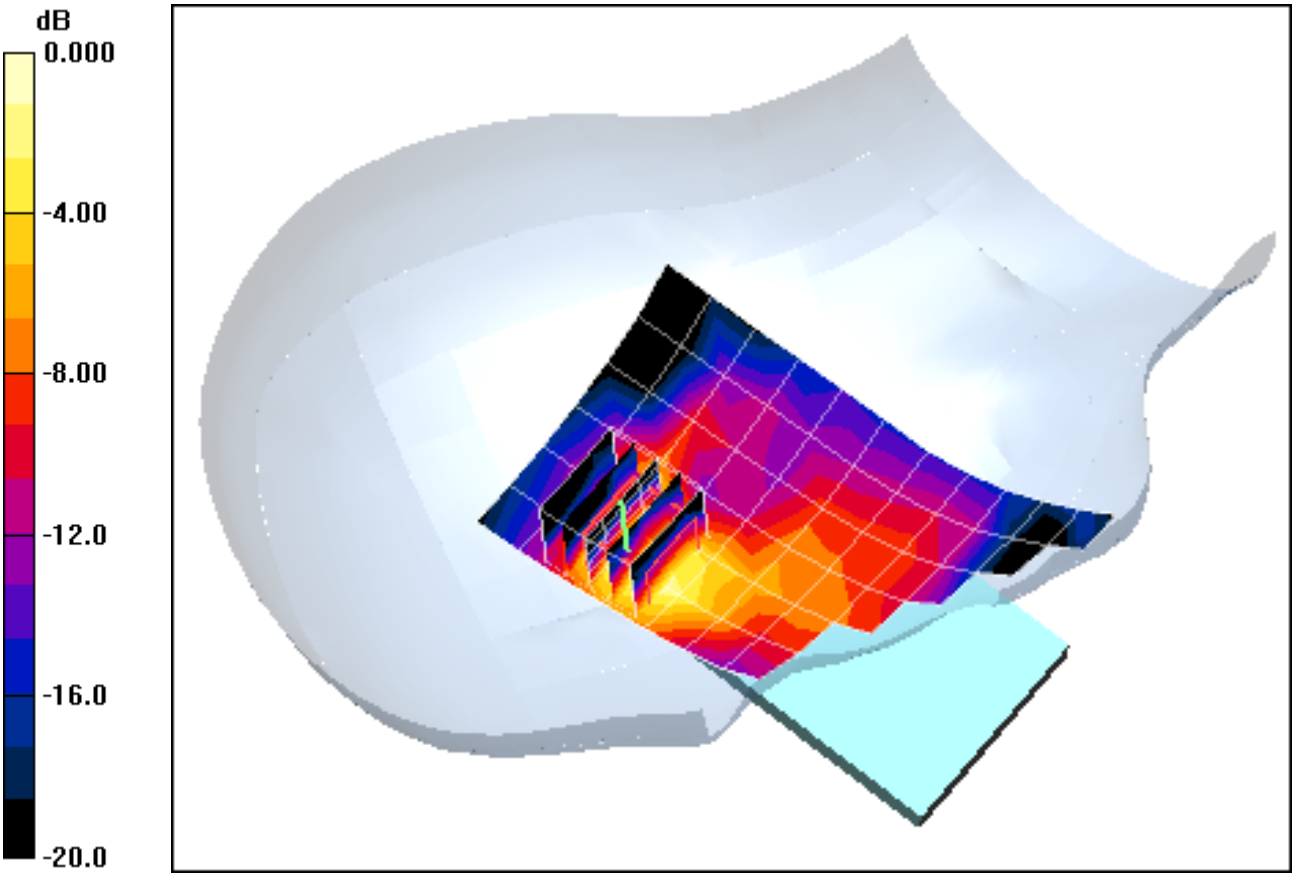


0 dB = 0.054mW/g

# PCTEST ENGINEERING LABORATORY, INC.

**DUT: A3LGTI9100P; Type: 850/1900 GSM/GPRS/EDGE/WCDMA/HSPA Phone with Bluetooth, WLAN, and NFC; Serial: FI-167-A**

Communication System: IEEE 802.11b; Frequency: 2437 MHz;Duty Cycle: 1:1
Medium: 2450 Head Medium parameters used (interpolated):
f = 2437 MHz; $\sigma$ = 1.77 mho/m; $\varepsilon_r$ = 38.9; $\rho$ = 1000 kg/m$^3$
Phantom section: Left Section

Test Date: 07-26-2011; Ambient Temp: 23.6°C; Tissue Temp: 23.5°C

Probe: ES3DV3 - SN3258; ConvF(4.5, 4.5, 4.5); Calibrated: 4/8/2011
Sensor-Surface: 3mm (Mechanical Surface Detection)
Electronics: DAE4 Sn649; Calibrated: 2/21/2011
Phantom: SAM Sub; Type: SAM 4.0; Serial: TP-1357
Measurement SW: DASY4, V4.7 Build 80; Postprocessing SW: SEMCAD, V1.8 Build 186

**Mode: IEEE 802.11b, Left Head, Touch, Ch 06, 1 Mbps**

**Area Scan (7x11x1):** Measurement grid: dx=15mm, dy=15mm
**Zoom Scan (5x5x7)/Cube 0:** Measurement grid: dx=8mm, dy=8mm, dz=5mm
Reference Value = 1.78 V/m
Peak SAR (extrapolated) = 0.185 W/kg
**SAR(1 g) = 0.098 mW/g; SAR(10 g) = 0.050 mW/g**

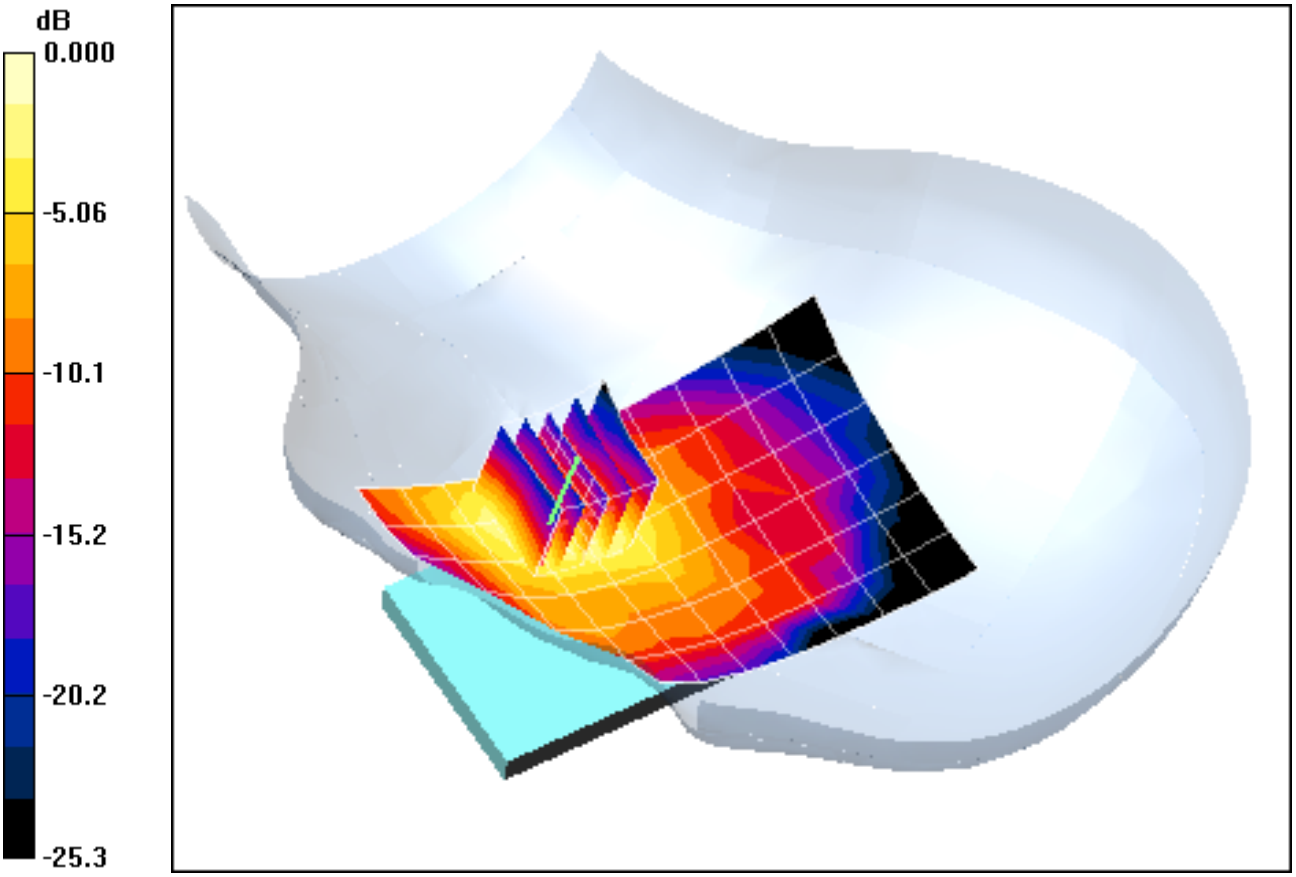


0 dB = 0.126mW/g

# PCTEST ENGINEERING LABORATORY, INC.

**DUT: A3LGTI9100P; Type: 850/1900 GSM/GPRS/EDGE/WCDMA/HSPA Phone with Bluetooth, WLAN, and NFC ; Serial: FI-167-A**

Communication System: IEEE 802.11b; Frequency: 2437 MHz;Duty Cycle: 1:1
Medium: 2450 Head Medium parameters used (interpolated):
f = 2437 MHz; $\sigma$ = 1.77 mho/m; $\varepsilon_r$ = 38.9; $\rho$ = 1000 kg/m$^3$
Phantom section: Left Section

Test Date: 07-26-2011; Ambient Temp: 23.6°C; Tissue Temp: 23.5°C

Probe: ES3DV3 - SN3258; ConvF(4.5, 4.5, 4.5); Calibrated: 4/8/2011
Sensor-Surface: 3mm (Mechanical Surface Detection)
Electronics: DAE4 Sn649; Calibrated: 2/21/2011
Phantom: SAM Sub; Type: SAM 4.0; Serial: TP-1357
Measurement SW: DASY4, V4.7 Build 80; Postprocessing SW: SEMCAD, V1.8 Build 186

## Mode: IEEE 802.11b, Left Head, Touch, Ch 06, 1 Mbps

**Area Scan (7x11x1):** Measurement grid: dx=15mm, dy=15mm
**Zoom Scan (5x5x7)/Cube 0:** Measurement grid: dx=8mm, dy=8mm, dz=5mm
Reference Value = 1.78 V/m
Peak SAR (extrapolated) = 0.185 W/kg
**SAR(1 g) = 0.098 mW/g; SAR(10 g) = 0.050 mW/g**

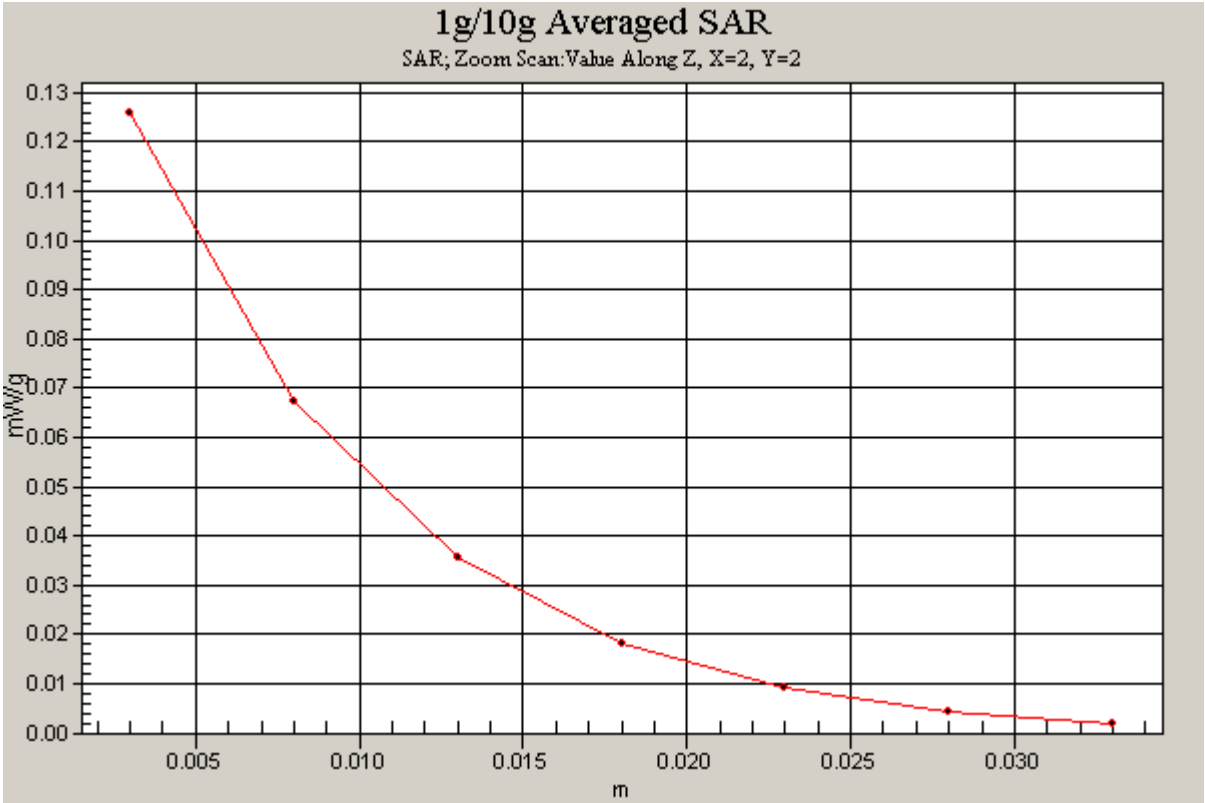

# PCTEST ENGINEERING LABORATORY, INC.

**DUT: A3LGTI9100P; Type: 850/1900 GSM/GPRS/EDGE/WCDMA/HSPA Phone with Bluetooth, WLAN, and NFC; Serial: FI-167-A**

Communication System: IEEE 802.11b; Frequency: 2437 MHz;Duty Cycle: 1:1
Medium: 2450 Head Medium parameters used (interpolated):
f = 2437 MHz; $\sigma$ = 1.77 mho/m; $\varepsilon_r$ = 38.9; $\rho$ = 1000 kg/m$^3$
Phantom section: Left Section

Test Date: 07-26-2011; Ambient Temp: 23.6°C; Tissue Temp: 23.5°C

Probe: ES3DV3 - SN3258; ConvF(4.5, 4.5, 4.5); Calibrated: 4/8/2011
Sensor-Surface: 3mm (Mechanical Surface Detection)
Electronics: DAE4 Sn649; Calibrated: 2/21/2011
Phantom: SAM Sub; Type: SAM 4.0; Serial: TP-1357
Measurement SW: DASY4, V4.7 Build 80; Postprocessing SW: SEMCAD, V1.8 Build 186

## Mode: IEEE 802.11b, Left Head, Tilt, Ch 06, 1 Mbps

**Area Scan (7x11x1):** Measurement grid: dx=15mm, dy=15mm
**Zoom Scan (5x5x7)/Cube 0:** Measurement grid: dx=8mm, dy=8mm, dz=5mm
Reference Value = 2.48 V/m
Peak SAR (extrapolated) = 0.039 W/kg
**SAR(1 g) = 0.021 mW/g; SAR(10 g) = 0.010 mW/g**

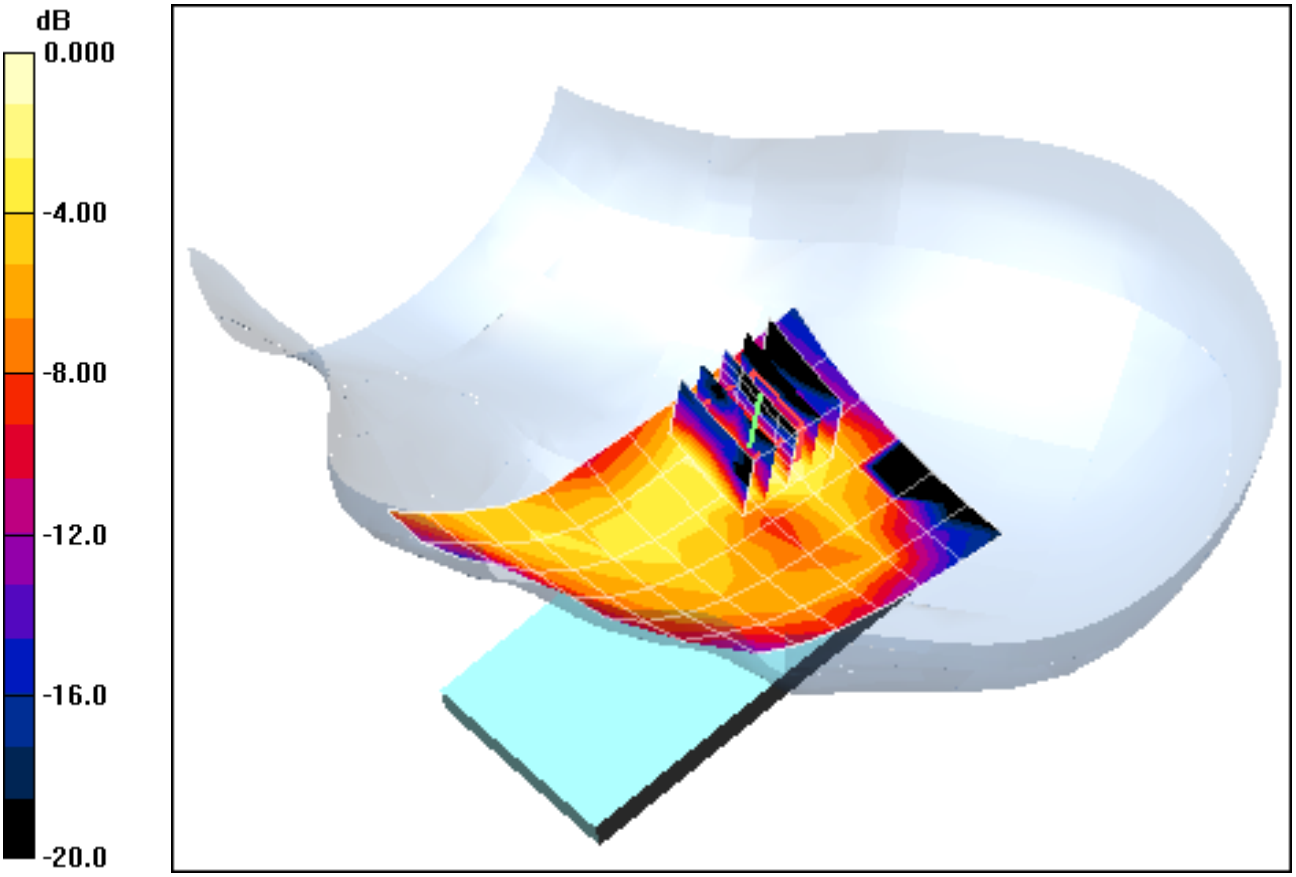


0 dB = 0.027mW/g

# PCTEST ENGINEERING LABORATORY, INC.

**DUT: A3LGTI9100P; Type: 850/1900 GSM/GPRS/EDGE/WCDMA/HSPA Phone with Bluetooth, WLAN and NFC; Serial: FI-167-C**

Communication System: IEEE 802.11a 5.2-5.8 GHz Band; Frequency: 5745 MHz;Duty Cycle: 1:1
Medium: 5 GHz Head; Medium parameters used (interpolated):
f = 5745 MHz; $\sigma$ = 5.41 mho/m; $\varepsilon_r$ = 34.3; $\rho$ = 1000 kg/m$^3$
Phantom section: Right Section

Test Date: 07-27-2011; Ambient Temp: 22.6 °C; Tissue Temp: 20.8 °C

Probe: EX3DV4 - SN3550; ConvF(3.64, 3.64, 3.64); Calibrated: 2/14/2011
Sensor-Surface: 2mm (Mechanical Surface Detection)
Electronics: DAE4 Sn665; Calibrated: 4/20/2011
Phantom: SAM Main; Type: SAM 4.0; Serial: TP-1114
Measurement SW: DASY4, V4.7 Build 80; Postprocessing SW: SEMCAD, V1.8 Build 186

## Mode: IEEE 802.11a 5.8 GHz, Right Head, Touch, Ch 149, 6 Mbps

**Area Scan (11x15x1):** Measurement grid: dx=10mm, dy=10mm
**Zoom Scan (7x7x11)/Cube 0:** Measurement grid: dx=4mm, dy=4mm, dz=2mm
Reference Value = 4.25 V/m
Peak SAR (extrapolated) = 0.399 W/kg
**SAR(1 g) = 0.098 mW/g; SAR(10 g) = 0.0462**

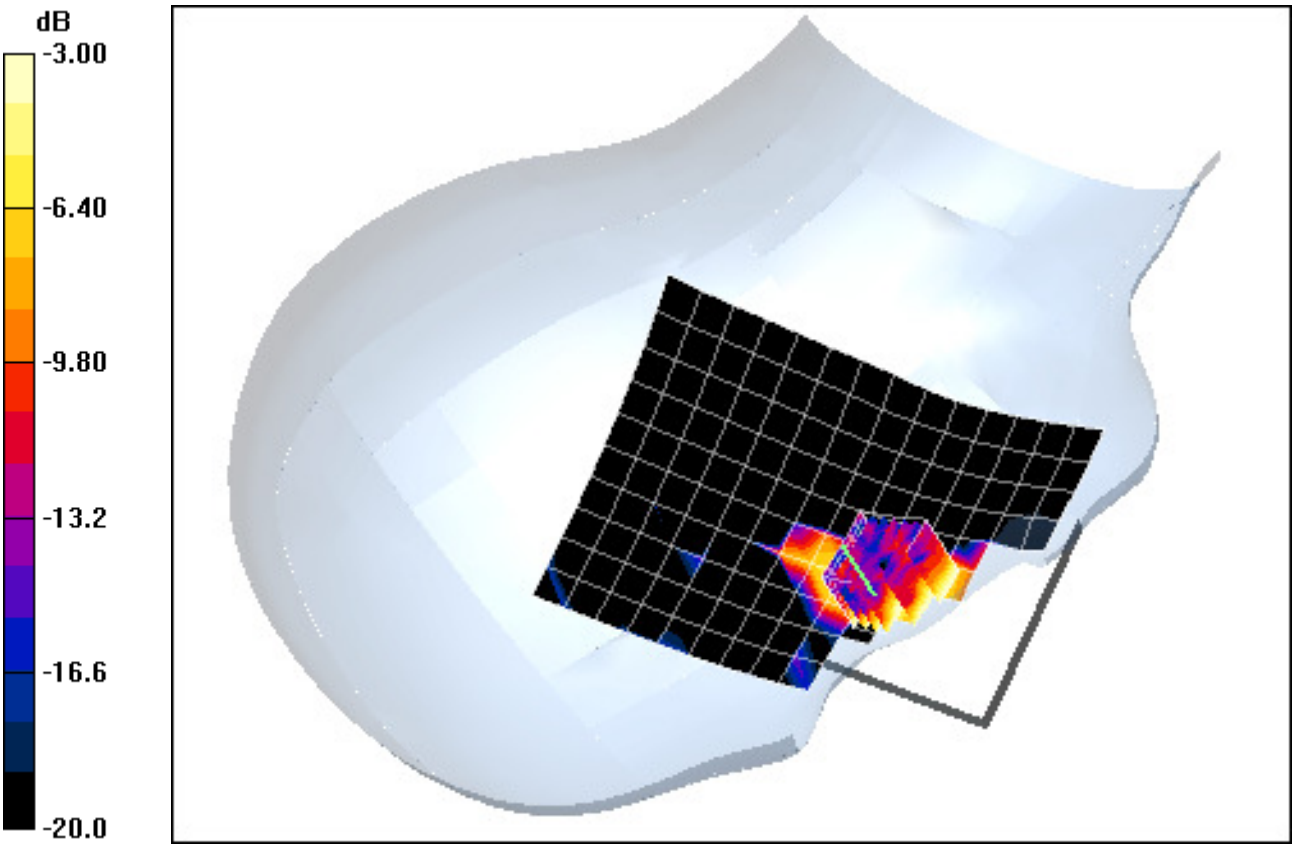


0 dB = 0.197mW/g

# PCTEST ENGINEERING LABORATORY, INC.

**DUT: A3LGTI9100P; Type: 850/1900 GSM/GPRS/EDGE/WCDMA/HSPA Phone with Bluetooth, WLAN and NFC; Serial: FI-167-C**

Communication System: IEEE 802.11a 5.2-5.8 GHz Band; Frequency: 5745 MHz;Duty Cycle: 1:1
Medium: 5 GHz Head; Medium parameters used (interpolated):
f = 5745 MHz; $\sigma$ = 5.41 mho/m; $\varepsilon_r$ = 34.3; $\rho$ = 1000 kg/m$^3$
Phantom section: Right Section

Test Date: 07-27-2011; Ambient Temp: 22.6 °C; Tissue Temp: 20.8 °C

Probe: EX3DV4 - SN3550; ConvF(3.64, 3.64, 3.64); Calibrated: 2/14/2011
Sensor-Surface: 2mm (Mechanical Surface Detection)
Electronics: DAE4 Sn665; Calibrated: 4/20/2011
Phantom: SAM Main; Type: SAM 4.0; Serial: TP-1114
Measurement SW: DASY4, V4.7 Build 80; Postprocessing SW: SEMCAD, V1.8 Build 186

## Mode: IEEE 802.11a 5.8 GHz, Right Head, Tilt, Ch 149, 6 Mbps

**Area Scan (9x15x1):** Measurement grid: dx=10mm, dy=10mm
**Zoom Scan (7x7x11)/Cube 0:** Measurement grid: dx=4mm, dy=4mm, dz=2mm
Reference Value = 3.49 V/m
Peak SAR (extrapolated) = 0.407 W/kg
**SAR(1 g) = 0.056 mW/g; SAR(10 g) = 0.021 mW/g**

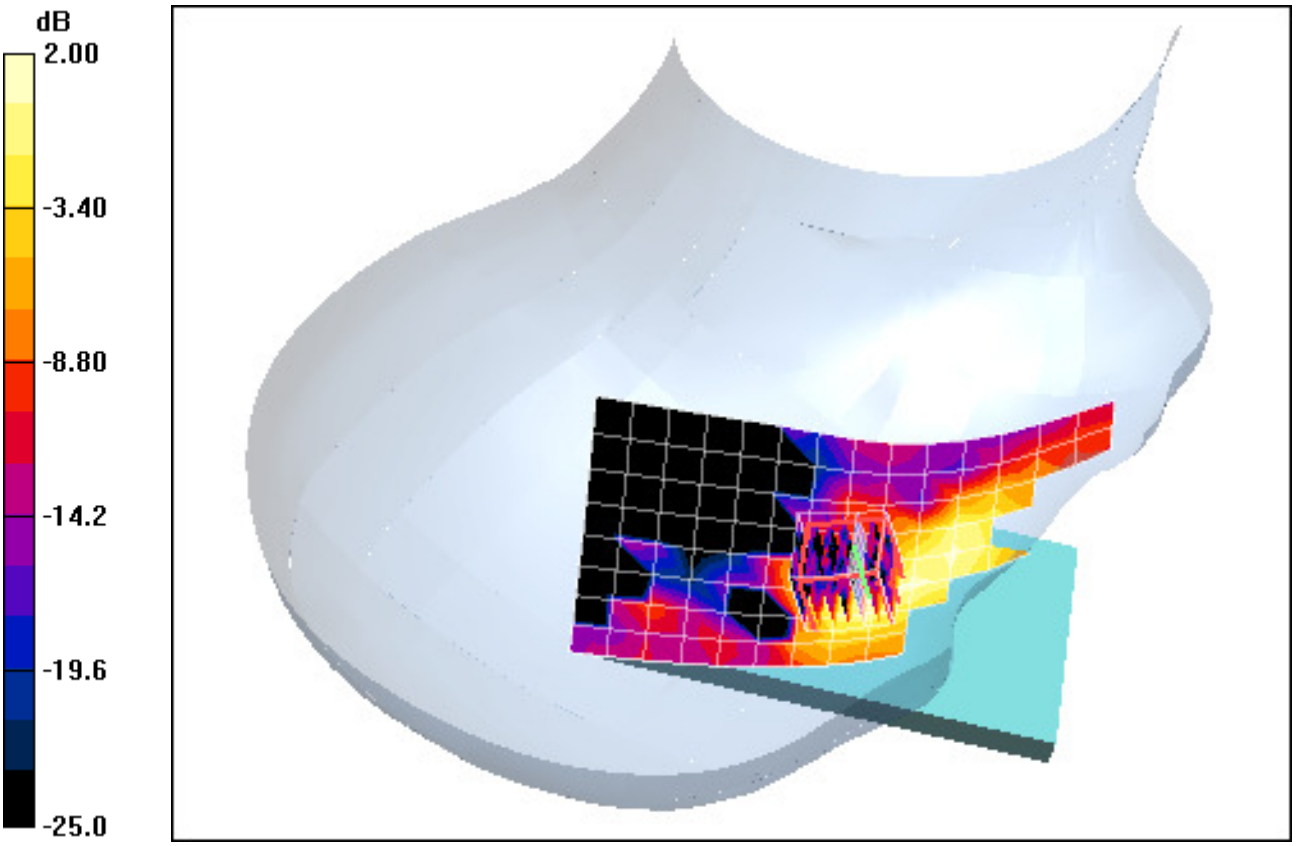


0 dB = 0.139mW/g

# PCTEST ENGINEERING LABORATORY, INC.

**DUT: A3LGTI9100P; Type: 850/1900 GSM/GPRS/EDGE/WCDMA/HSPA Phone with Bluetooth, WLAN and NFC; Serial: FI-167-C**

Communication System: IEEE 802.11a 5.2-5.8 GHz Band; Frequency: 5745 MHz;Duty Cycle: 1:1
Medium: 5 GHz Head; Medium parameters used (interpolated):
f = 5745 MHz; $\sigma$ = 5.41 mho/m; $\varepsilon_r$ = 34.3; $\rho$ = 1000 kg/m$^3$
Phantom section: Left Section

Test Date: 07-27-2011; Ambient Temp: 22.6 °C; Tissue Temp: 20.8 °C

Probe: EX3DV4 - SN3550; ConvF(3.64, 3.64, 3.64); Calibrated: 2/14/2011
Sensor-Surface: 2mm (Mechanical Surface Detection)
Electronics: DAE4 Sn665; Calibrated: 4/20/2011
Phantom: SAM Main; Type: SAM 4.0; Serial: TP-1114
Measurement SW: DASY4, V4.7 Build 80; Postprocessing SW: SEMCAD, V1.8 Build 186

## Mode: IEEE 802.11a, 5.8 GHz Left Head, Touch, Ch 149, 6 Mbps

**Area Scan (9x15x1):** Measurement grid: dx=10mm, dy=10mm
**Zoom Scan (7x7x11)/Cube 0:** Measurement grid: dx=4mm, dy=4mm, dz=2mm
Reference Value = 4.22 V/m
Peak SAR (extrapolated) = 0.444 W/kg
**SAR(1 g) = 0.119 mW/g; SAR(10 g) = 0.034 mW/g**

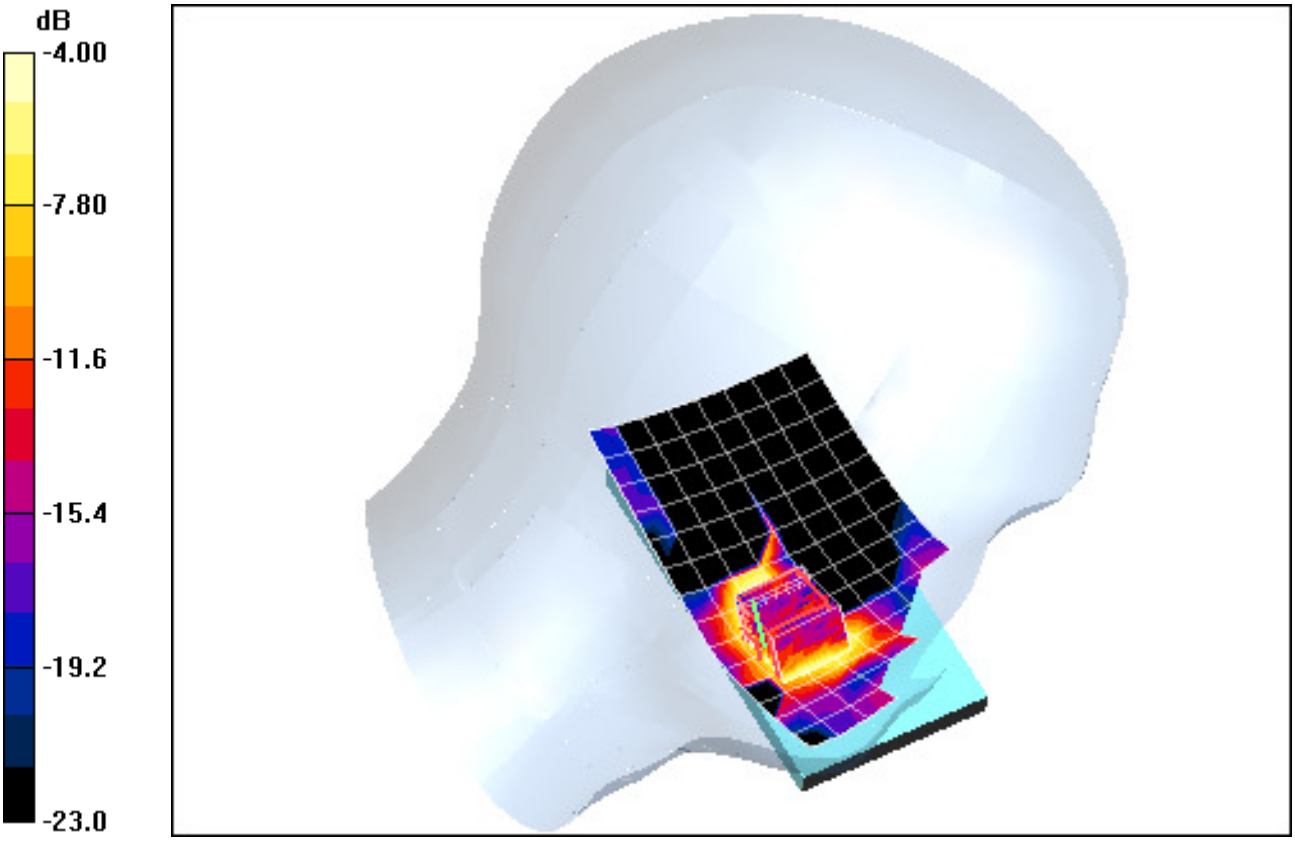


0 dB = 0.225mW/g

# PCTEST ENGINEERING LABORATORY, INC.

**DUT: Dipole 5800 MHz; Type: D5GHzV2; Serial: 1057**

Communication System: CW; Frequency: 5800 MHz;Duty Cycle: 1:1
Medium: 5 GHz Head; Medium parameters used (interpolated):
f = 5800 MHz; $\sigma$ = 5.51 mho/m; $\varepsilon_r$ = 34.2; $\rho$ = 1000 kg/m$^3$
Phantom section: Flat Section; Space: 1.0 cm

Test Date: 07-27-2011; Ambient Temp: 22.6 °C; Tissue Temp: 20.8 °C

Probe: EX3DV4 - SN3550; ConvF(3.64, 3.64, 3.64); Calibrated: 2/14/2011
Sensor-Surface: 2mm (Mechanical Surface Detection)
Electronics: DAE4 Sn665; Calibrated: 4/20/2011
Phantom: SAM Main; Type: SAM 4.0; Serial: TP-1114
Measurement SW: DASY4, V4.7 Build 80; Postprocessing SW: SEMCAD, V1.8 Build 186

## 5800MHz System Verification

**Area Scan (7x9x1):** Measurement grid: dx=10mm, dy=10mm
**Zoom Scan (7x7x11)/Cube 0:** Measurement grid: dx=4mm, dy=4mm, dz=2mm
Input Power = 20.0 dBm (100 mW)
**SAR(1 g) = 9.04 mW/g; SAR(10 g) = 2.51 mW/g**
Deviation = 9.05 %

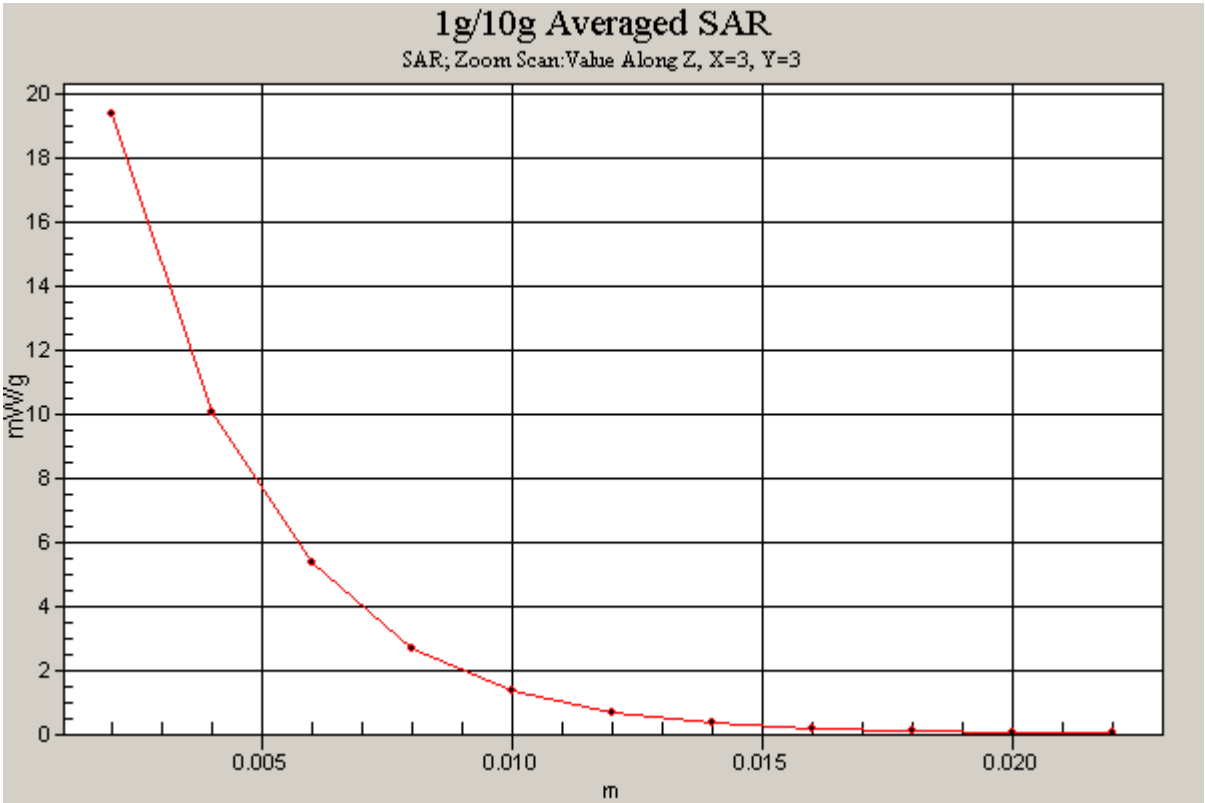

# PCTEST ENGINEERING LABORATORY, INC.

**DUT: A3LGTI9100P; Type: 850/1900 GSM/GPRS/EDGE/WCDMA/HSPA Phone with Bluetooth, WLAN and NFC; Serial: FI-167-C**

Communication System: IEEE 802.11a 5.2-5.8 GHz Band; Frequency: 5745 MHz;Duty Cycle: 1:1
Medium: 5 GHz Head; Medium parameters used (interpolated):
f = 5745 MHz; $\sigma$ = 5.41 mho/m; $\varepsilon_r$ = 34.3; $\rho$ = 1000 kg/m$^3$
Phantom section: Left Section

Test Date: 07-27-2011; Ambient Temp: 22.6 °C; Tissue Temp: 20.8 °C

Probe: EX3DV4 - SN3550; ConvF(3.64, 3.64, 3.64); Calibrated: 2/14/2011
Sensor-Surface: 2mm (Mechanical Surface Detection)
Electronics: DAE4 Sn665; Calibrated: 4/20/2011
Phantom: SAM Main; Type: SAM 4.0; Serial: TP-1114
Measurement SW: DASY4, V4.7 Build 80; Postprocessing SW: SEMCAD, V1.8 Build 186

## Mode: IEEE 802.11a, 5.8 GHz Left Head, Tilt, Ch 149, 6 Mbps

**Area Scan (9x15x1):** Measurement grid: dx=10mm, dy=10mm
**Zoom Scan (7x7x11)/Cube 0:** Measurement grid: dx=4mm, dy=4mm, dz=2mm
Reference Value = 3.76 V/m
Peak SAR (extrapolated) = 0.318 W/kg
**SAR(1 g) = 0.084 mW/g; SAR(10 g) = 0.032 mW/g**

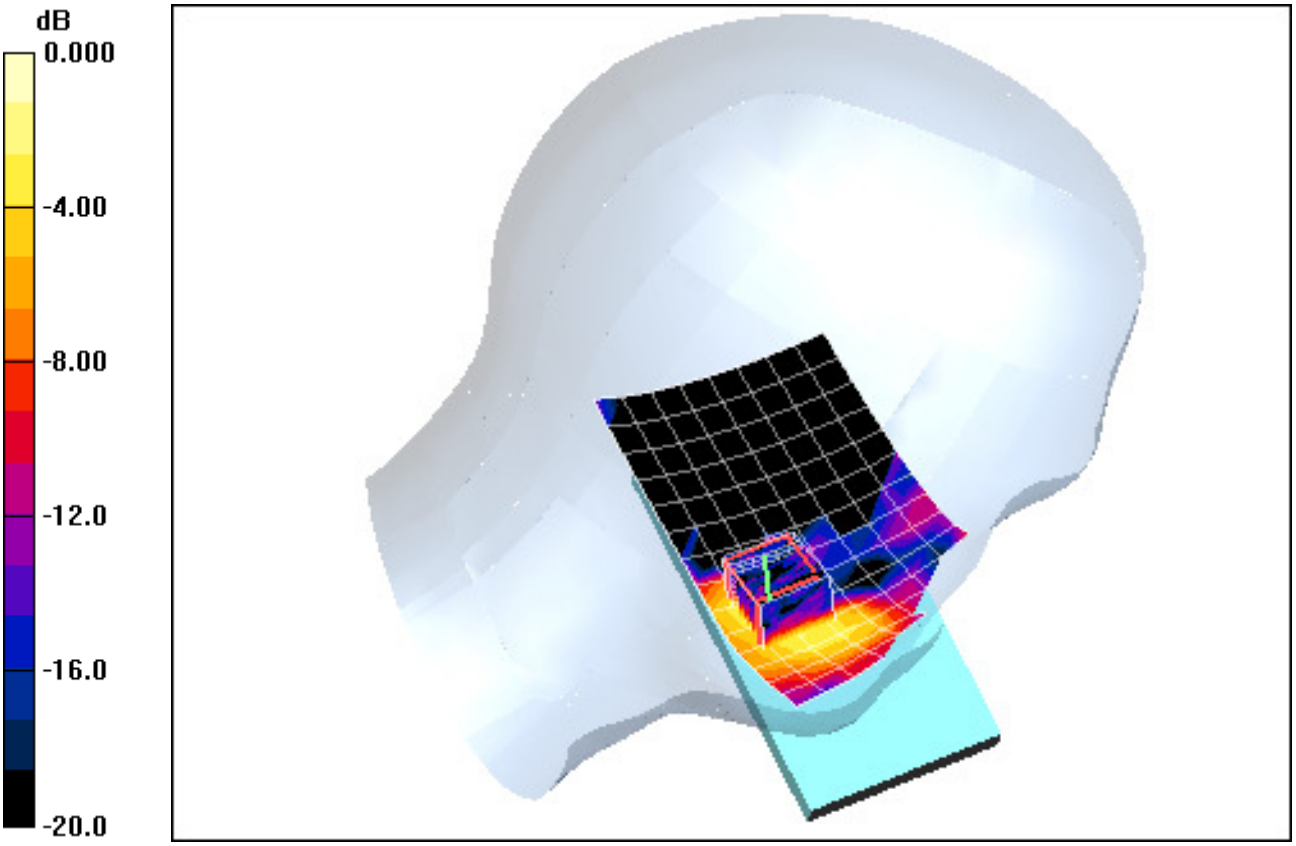


0 dB = 0.156mW/g

# PCTEST ENGINEERING LABORATORY, INC.

**DUT: A3LGTI9100P; Type: 850/1900 GSM/GPRS/EDGE/WCDMA/HSPA Phone with Bluetooth, WLAN and NFC; Serial: FI-167-A**

Communication System: GSM850 GPRS; 3 Tx slots; Frequency: 836.6 MHz; Duty Cycle: 1:2.76
Medium: 835 Body Medium parameters used (interpolated):
f = 836.6 MHz; $\sigma$ = 0.987 mho/m; $\varepsilon_r$ = 54.9; $\rho$ = 1000 kg/m$^3$
Phantom section: Flat Section; Space: 1.0 cm

Test Date: 07-25-2011; Ambient Temp: 24.0 °C; Tissue Temp: 22.2 °C

Probe: ES3DV3 - SN3258; ConvF(6.12, 6.12, 6.12); Calibrated: 4/8/2011
Sensor-Surface: 4mm (Mechanical Surface Detection)
Electronics: DAE4 Sn649; Calibrated: 2/21/2011
Phantom: SAM Main; Type: SAM 4.0; Serial: TP-1106
Measurement SW: DASY4, V4.7 Build 80; Postprocessing SW: SEMCAD, V1.8 Build 186

## Mode: GPRS 850, Body SAR, Back side, Mid.ch, 3 Tx Slots

**Area Scan (7x12x1):** Measurement grid: dx=15mm, dy=15mm
**Zoom Scan (5x5x7)/Cube 0:** Measurement grid: dx=8mm, dy=8mm, dz=5mm
Reference Value = 23.2 V/m
Peak SAR (extrapolated) = 0.635 W/kg
**SAR(1 g) = 0.495 mW/g; SAR(10 g) = 0.371 mW/g**

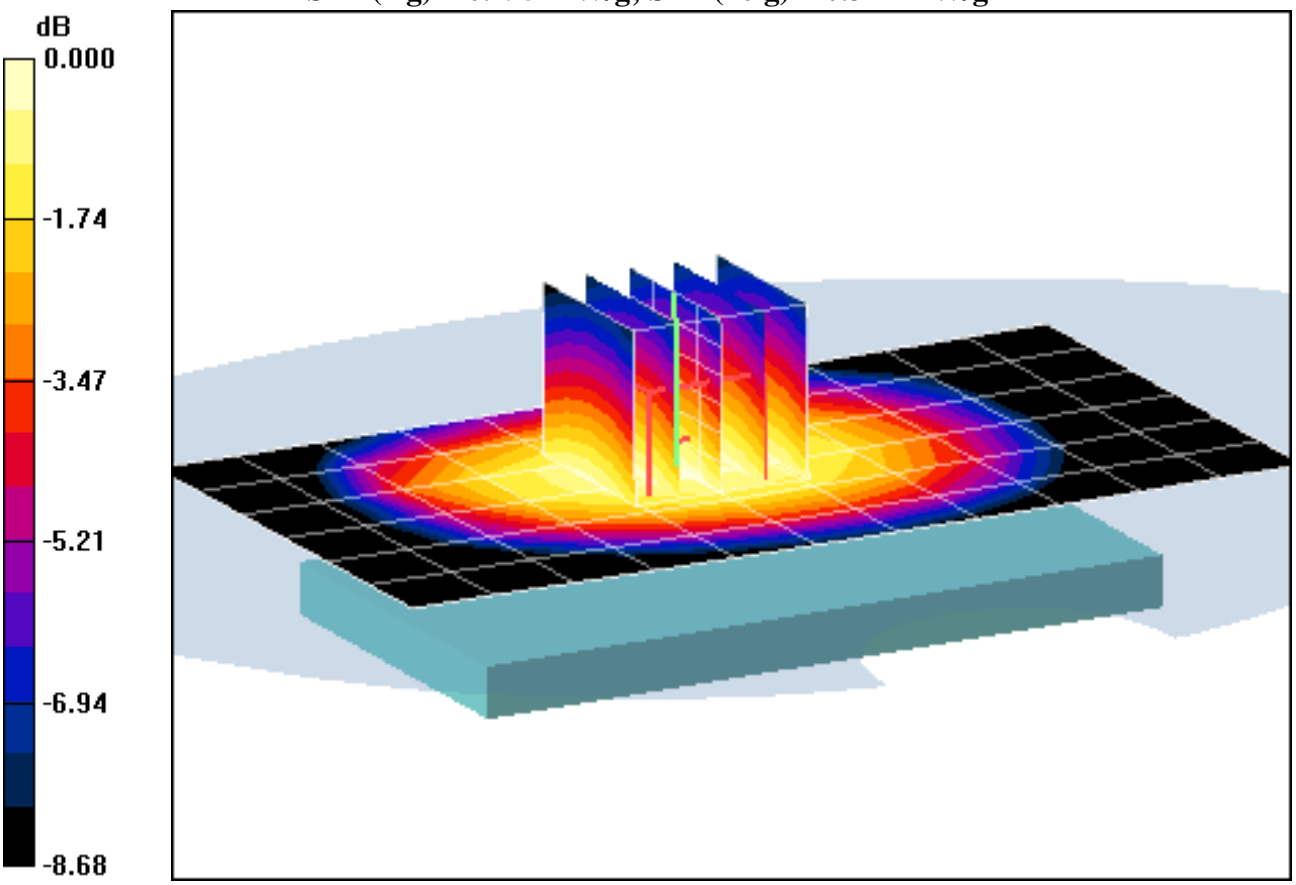


0 dB = 0.521mW/g

# PCTEST ENGINEERING LABORATORY, INC.

**DUT: A3LGTI9100P; Type: 850/1900 GSM/GPRS/EDGE/WCDMA/HSPA Phone with Bluetooth, WLAN and NFC; Serial: FI-167-A**

Communication System: GSM850 GPRS; 3 Tx slots; Frequency: 836.6 MHz; Duty Cycle: 1:2.76
Medium: 835 Body Medium parameters used (interpolated):
f = 836.6 MHz; $\sigma$ = 0.987 mho/m; $\varepsilon_r$ = 54.9; $\rho$ = 1000 kg/m$^3$
Phantom section: Flat Section; Space: 1.0 cm

Test Date: 07-25-2011; Ambient Temp: 24.0 °C; Tissue Temp: 22.2 °C

Probe: ES3DV3 - SN3258; ConvF(6.12, 6.12, 6.12); Calibrated: 4/8/2011
Sensor-Surface: 4mm (Mechanical Surface Detection)
Electronics: DAE4 Sn649; Calibrated: 2/21/2011
Phantom: SAM Main; Type: SAM 4.0; Serial: TP-1106
Measurement SW: DASY4, V4.7 Build 80; Postprocessing SW: SEMCAD, V1.8 Build 186

## Mode: GPRS 850, Body SAR, Back side, Mid.ch, 3 Tx Slots

**Area Scan (7x12x1):** Measurement grid: dx=15mm, dy=15mm
**Zoom Scan (5x5x7)/Cube 0:** Measurement grid: dx=8mm, dy=8mm, dz=5mm
Reference Value = 23.2 V/m
Peak SAR (extrapolated) = 0.635 W/kg
**SAR(1 g) = 0.495 mW/g; SAR(10 g) = 0.371 mW/g**

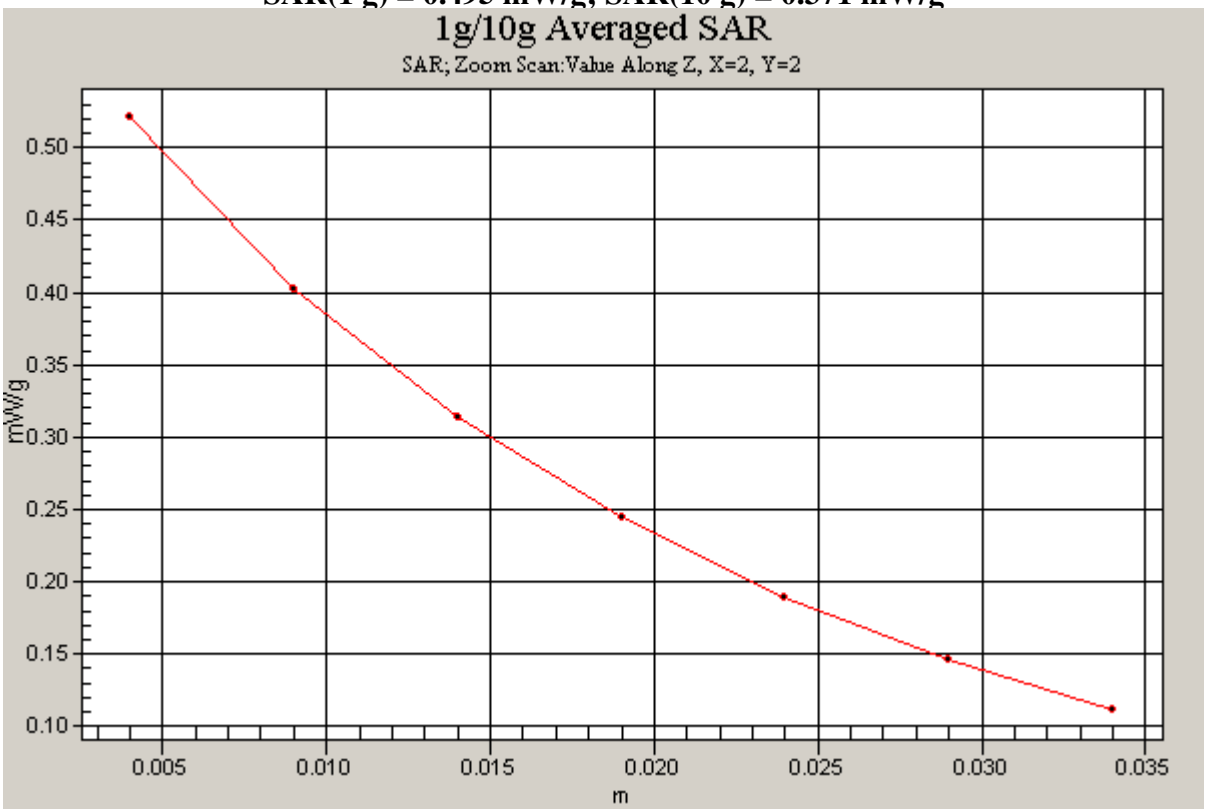

# PCTEST ENGINEERING LABORATORY, INC.

**DUT: A3LGTI9100P; Type: 850/1900 GSM/GPRS/EDGE/WCDMA/HSPA Phone with Bluetooth, WLAN and NFC; Serial: FI-167-A**

Communication System: GSM850 GPRS; 3 Tx slots; Frequency: 836.6 MHz;Duty Cycle: 1:2.76
Medium: 835 Body Medium parameters used (interpolated):
f = 836.6 MHz; $\sigma$ = 0.987 mho/m; $\varepsilon_r$ = 54.9; $\rho$ = 1000 kg/m$^3$
Phantom section: Flat Section; Space: 1.0 cm

Test Date: 07-25-2011; Ambient Temp: 24.0 °C; Tissue Temp: 22.2 °C

Probe: ES3DV3 - SN3258; ConvF(6.12, 6.12, 6.12); Calibrated: 4/8/2011
Sensor-Surface: 4mm (Mechanical Surface Detection)
Electronics: DAE4 Sn649; Calibrated: 2/21/2011
Phantom: SAM Main; Type: SAM 4.0; Serial: TP-1106
Measurement SW: DASY4, V4.7 Build 80; Postprocessing SW: SEMCAD, V1.8 Build 186

## Mode: GPRS 850, Body SAR, Front side, Mid.ch, 3 Tx Slots

**Area Scan (7x12x1):** Measurement grid: dx=15mm, dy=15mm
**Zoom Scan (5x5x7)/Cube 0:** Measurement grid: dx=8mm, dy=8mm, dz=5mm
Reference Value = 15.9 V/m
Peak SAR (extrapolated) = 0.295 W/kg
**SAR(1 g) = 0.235 mW/g; SAR(10 g) = 0.180 mW/g**

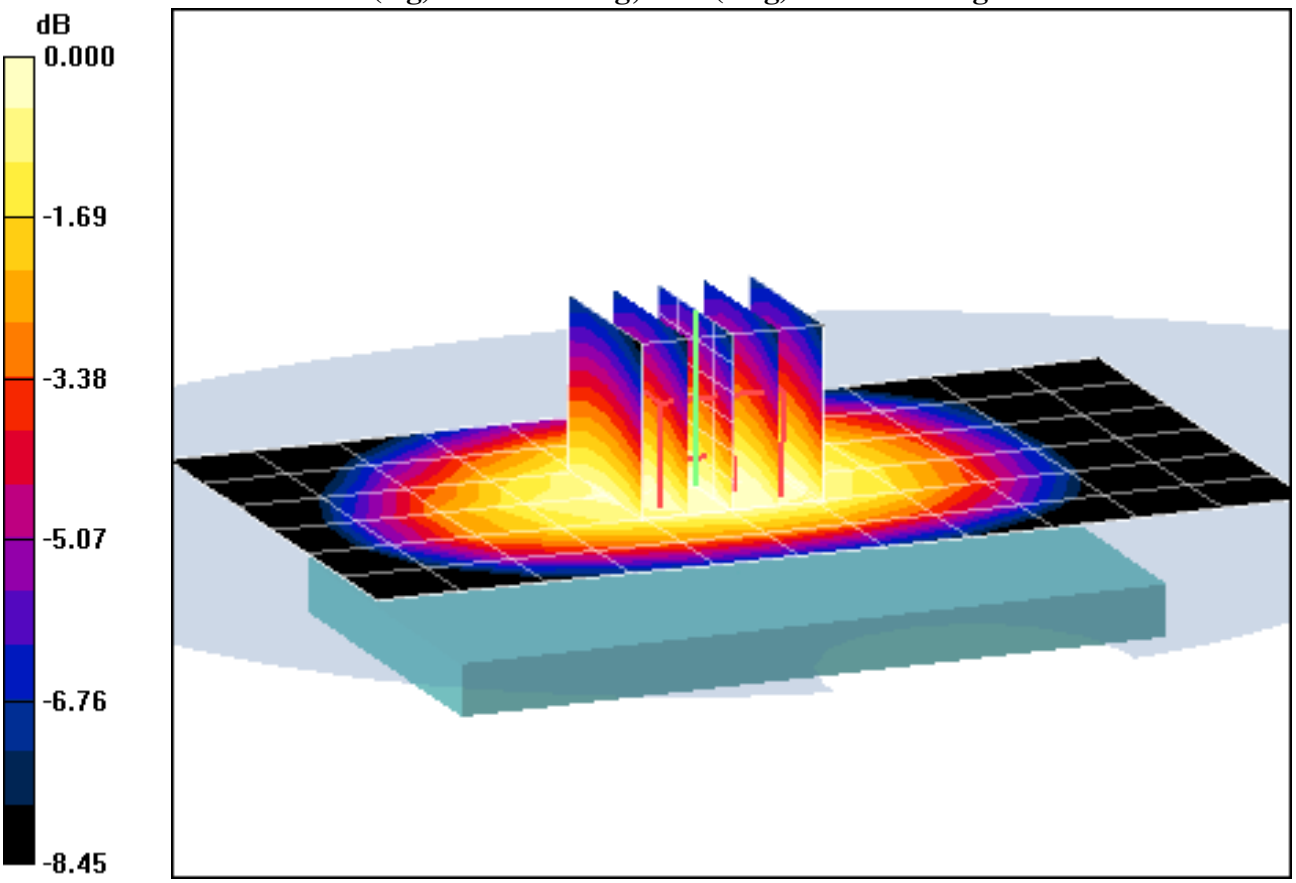


0 dB = 0.245mW/g

# PCTEST ENGINEERING LABORATORY, INC.

**DUT: A3LGTI9100P; Type: 850/1900 GSM/GPRS/EDGE/WCDMA/HSPA Phone with Bluetooth, WLAN and NFC; Serial: FI-167-A**

Communication System: GSM850 GPRS; 3 Tx slots; Frequency: 836.6 MHz;Duty Cycle: 1:2.76
Medium: 835 Body Medium parameters used (interpolated):
f = 836.6 MHz; $\sigma$ = 0.987 mho/m; $\varepsilon_r$ = 54.9; $\rho$ = 1000 kg/m$^3$
Phantom section: Flat Section; Space: 1.0 cm

Test Date: 07-25-2011; Ambient Temp: 24.0 °C; Tissue Temp: 22.2 °C

Probe: ES3DV3 - SN3258; ConvF(6.12, 6.12, 6.12); Calibrated: 4/8/2011
Sensor-Surface: 4mm (Mechanical Surface Detection)
Electronics: DAE4 Sn649; Calibrated: 2/21/2011
Phantom: SAM Main; Type: SAM 4.0; Serial: TP-1106
Measurement SW: DASY4, V4.7 Build 80; Postprocessing SW: SEMCAD, V1.8 Build 186

## Mode: GPRS 850, Body SAR, Bottom Edge, Mid.ch, 3 Tx Slots

**Area Scan (5x7x1):** Measurement grid: dx=15mm, dy=15mm
**Zoom Scan (5x5x7)/Cube 0:** Measurement grid: dx=8mm, dy=8mm, dz=5mm
Reference Value = 9.23 V/m
Peak SAR (extrapolated) = 0.154 W/kg
**SAR(1 g) = 0.089 mW/g; SAR(10 g) = 0.054 mW/g**

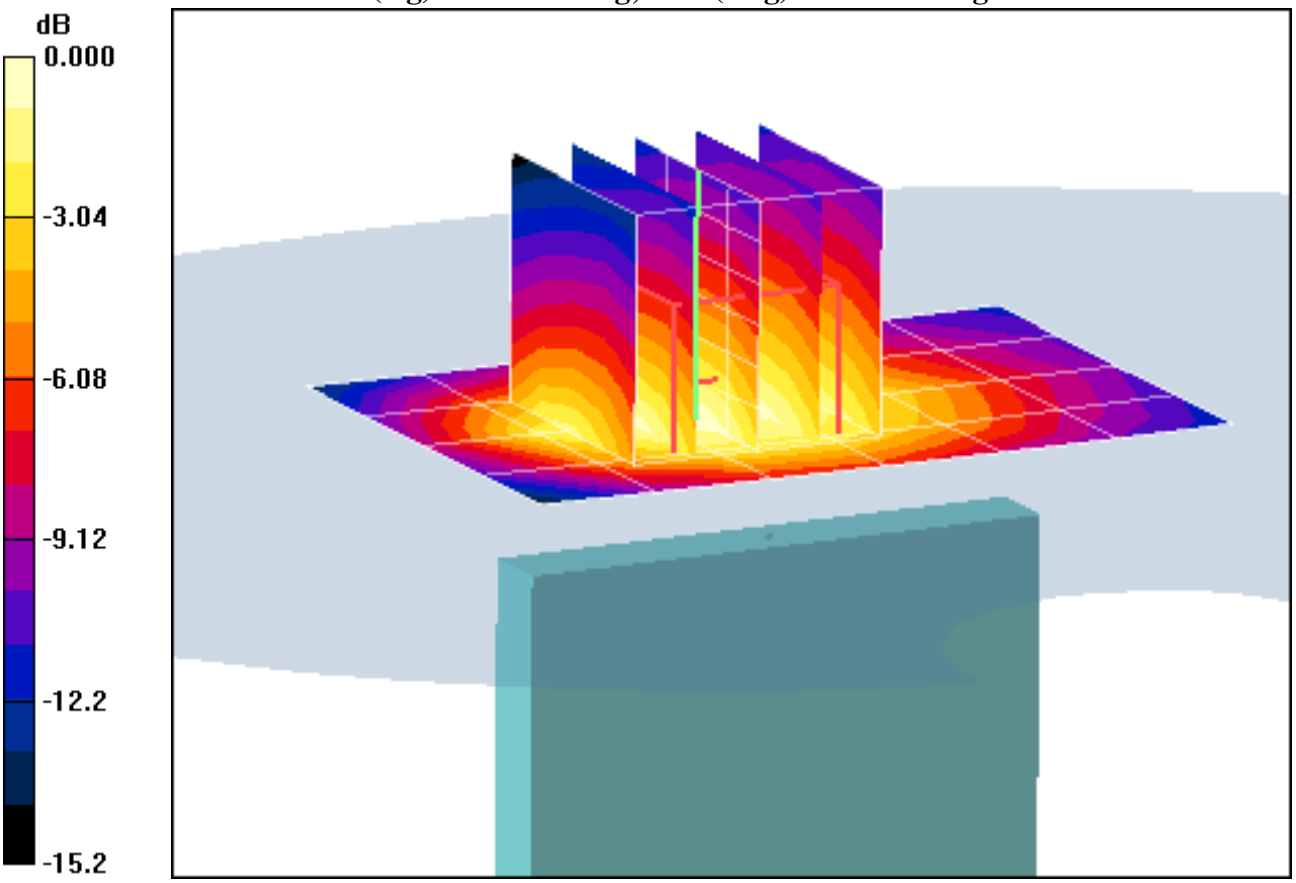


0 dB = 0.096mW/g

# PCTEST ENGINEERING LABORATORY, INC.

**DUT: A3LGTI9100P; Type: 850/1900 GSM/GPRS/EDGE/WCDMA/HSPA Phone with Bluetooth , WLAN and NFC; Serial: FI-167-A**

Communication System: GSM850 GPRS; 3 Tx slots; Frequency: 836.6 MHz;Duty Cycle: 1:2.76
Medium: 835 Body Medium parameters used (interpolated):
f = 836.6 MHz; $\sigma$ = 0.987 mho/m; $\varepsilon_r$ = 54.9; $\rho$ = 1000 kg/m$^3$
Phantom section: Flat Section; Space: 1.0 cm

Test Date: 07-25-2011; Ambient Temp: 24.0 °C; Tissue Temp: 22.2 °C

Probe: ES3DV3 - SN3258; ConvF(6.12, 6.12, 6.12); Calibrated: 4/8/2011
Sensor-Surface: 4mm (Mechanical Surface Detection)
Electronics: DAE4 Sn649; Calibrated: 2/21/2011
Phantom: SAM Main; Type: SAM 4.0; Serial: TP-1106
Measurement SW: DASY4, V4.7 Build 80; Postprocessing SW: SEMCAD, V1.8 Build 186

**Mode: GPRS 850, Body SAR, Right Edge, Mid.ch, 3 Tx Slots**

**Area Scan (5x13x1):** Measurement grid: dx=15mm, dy=15mm
**Zoom Scan (5x5x7)/Cube 0:** Measurement grid: dx=8mm, dy=8mm, dz=5mm
Reference Value = 20.2 V/m
Peak SAR (extrapolated) = 0.520 W/kg
**SAR(1 g) = 0.367 mW/g; SAR(10 g) = 0.253 mW/g**

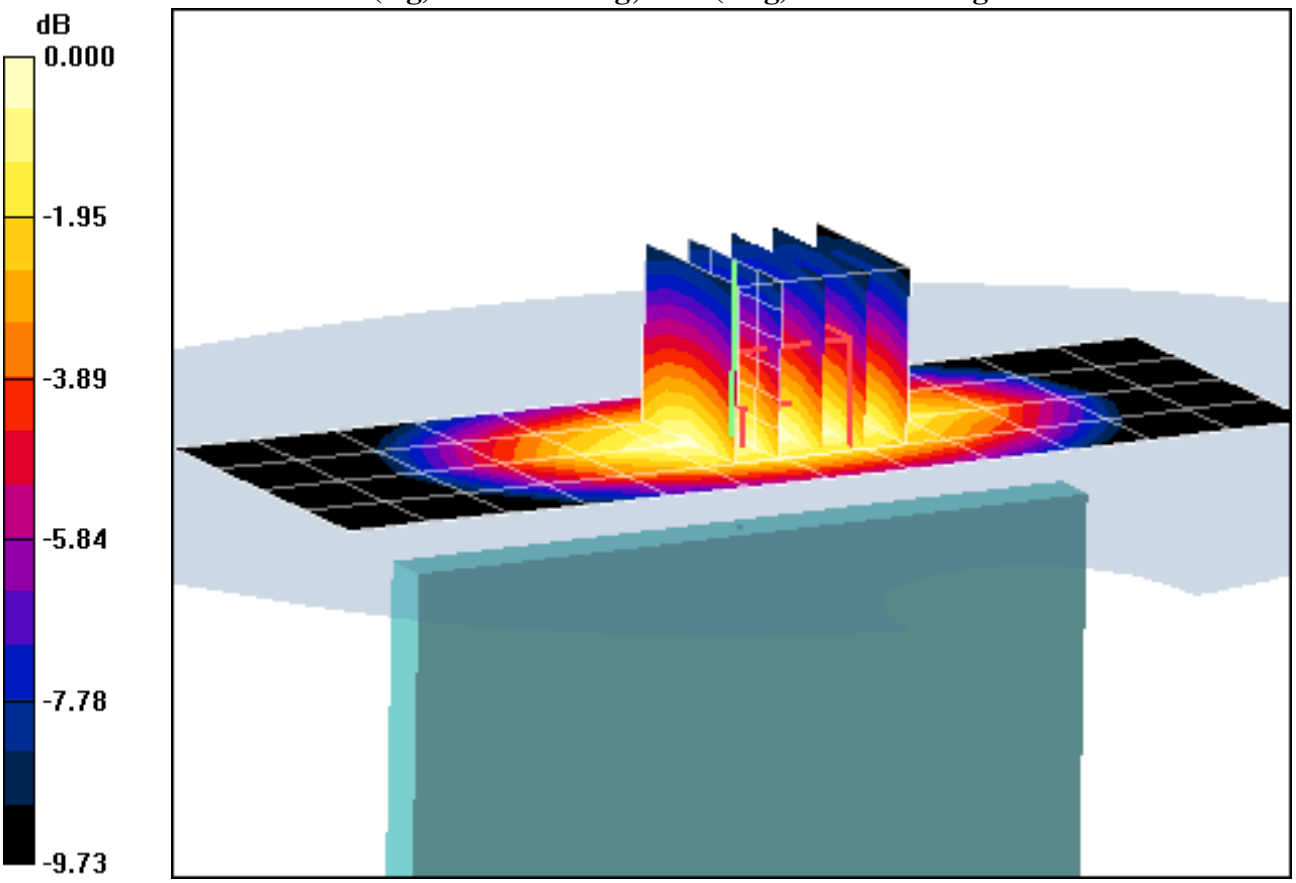


0 dB = 0.390mW/g

# PCTEST ENGINEERING LABORATORY, INC.

**DUT: A3LGTI9100P; Type: 850/1900 GSM/GPRS/EDGE/WCDMA/HSPA Phone with Bluetooth, WLAN and NFC; Serial: FI-167-A**

Communication System: GSM1900 GPRS; 2 Tx slots; Frequency: 1909.8 MHz;Duty Cycle: 1:4.15

Medium: 1900 Body Medium parameters used (interpolated):

f = 1910 MHz; $\sigma$ = 1.526 mho/m; $\varepsilon_r$ = 53.26; $\rho$ = 1000 kg/m$^3$

Phantom section: Flat Section; Space: 1.0 cm

Test Date: 07-25-2011; Ambient Temp: 23.7°C; Tissue Temp: 21.8°C

Probe: ES3DV2 - SN3022; ConvF(4.34, 4.34, 4.34); Calibrated: 9/21/2010
Sensor-Surface: 4mm (Mechanical Surface Detection)
Electronics: DAE4 Sn704; Calibrated: 3/17/2011
Phantom: SAM with CRP; Type: SAM; Serial: TP1375
Measurement SW: DASY4, V4.7 Build 80; Postprocessing SW: SEMCAD, V1.8 Build 186

## Mode: GPRS 1900, Body SAR, Back side, High.ch, 2 Tx Slots

**Area Scan (7x12x1):** Measurement grid: dx=15mm, dy=15mm
**Zoom Scan (5x5x7)/Cube 0:** Measurement grid: dx=8mm, dy=8mm, dz=5mm
Reference Value = 28.2 V/m
Peak SAR (extrapolated) = 1.81 W/kg
**SAR(1 g) = 1.07 mW/g; SAR(10 g) = 0.549 mW/g**

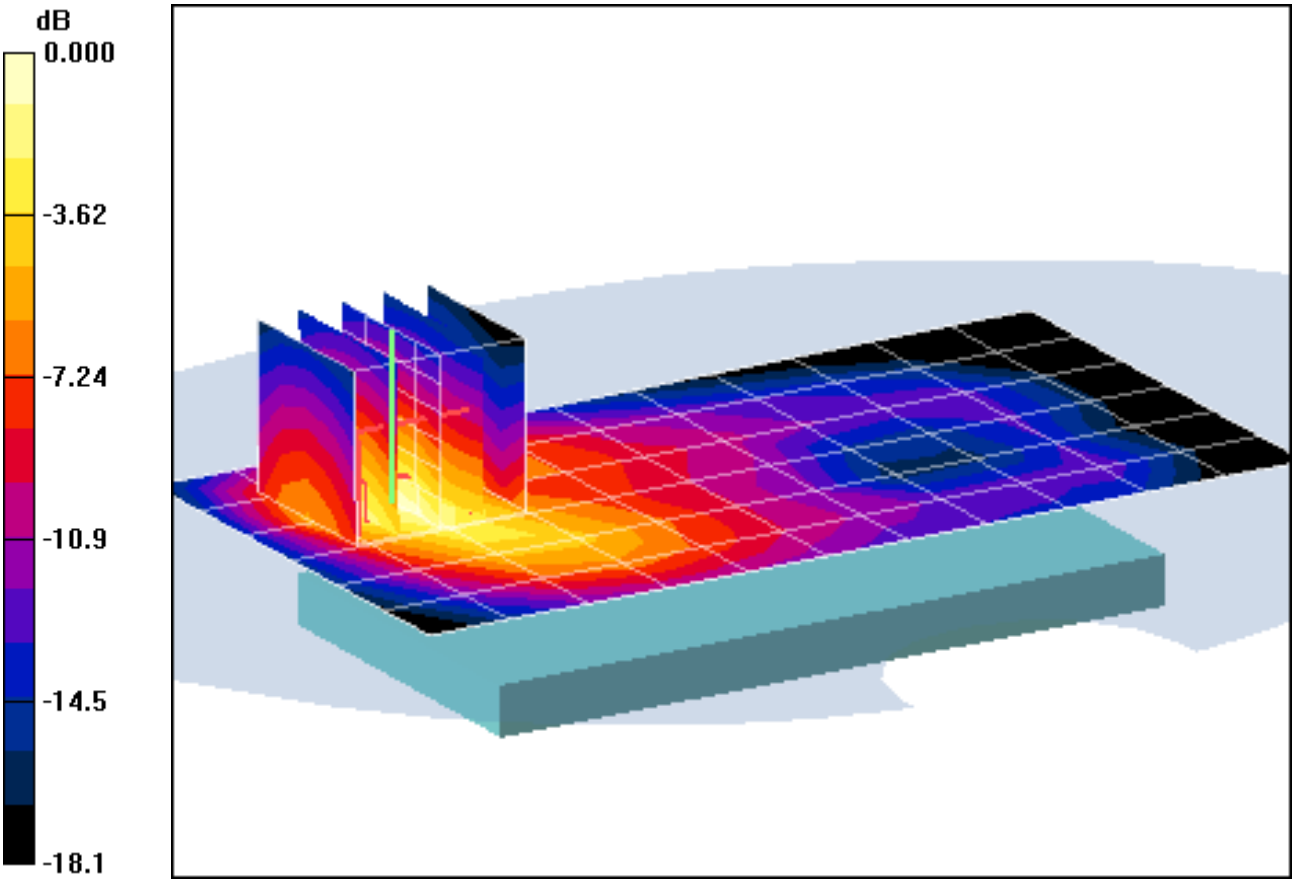


0 dB = 1.20mW/g

# PCTEST ENGINEERING LABORATORY, INC.

**DUT: A3LGTI9100P; Type: 850/1900 GSM/GPRS/EDGE/WCDMA/HSPA Phone with Bluetooth, WLAN and NFC; Serial: FI-167-A**

Communication System: GSM1900 GPRS; 2 Tx slots; Frequency: 1880 MHz;Duty Cycle: 1:4.15
Medium: 1900 Body Medium parameters used:
f = 1880 MHz; $\sigma$ = 1.5 mho/m; $\varepsilon_r$ = 53.15; $\rho$ = 1000 kg/m$^3$
Phantom section: Flat Section; Space: 1.0 cm

Test Date: 07-25-2011; Ambient Temp: 23.7°C; Tissue Temp: 21.8°C

Probe: ES3DV2 - SN3022; ConvF(4.34, 4.34, 4.34); Calibrated: 9/21/2010
Sensor-Surface: 4mm (Mechanical Surface Detection)
Electronics: DAE4 Sn704; Calibrated: 3/17/2011
Phantom: SAM with CRP; Type: SAM; Serial: TP1375
Measurement SW: DASY4, V4.7 Build 80; Postprocessing SW: SEMCAD, V1.8 Build 186

## Mode: GPRS 1900, Body SAR, Front side, Mid.ch, 2 Tx Slots

**Area Scan (7x12x1):** Measurement grid: dx=15mm, dy=15mm
**Zoom Scan (5x5x7)/Cube 0:** Measurement grid: dx=8mm, dy=8mm, dz=5mm
Reference Value = 18.1 V/m
Peak SAR (extrapolated) = 0.711 W/kg
**SAR(1 g) = 0.442 mW/g; SAR(10 g) = 0.251 mW/g**

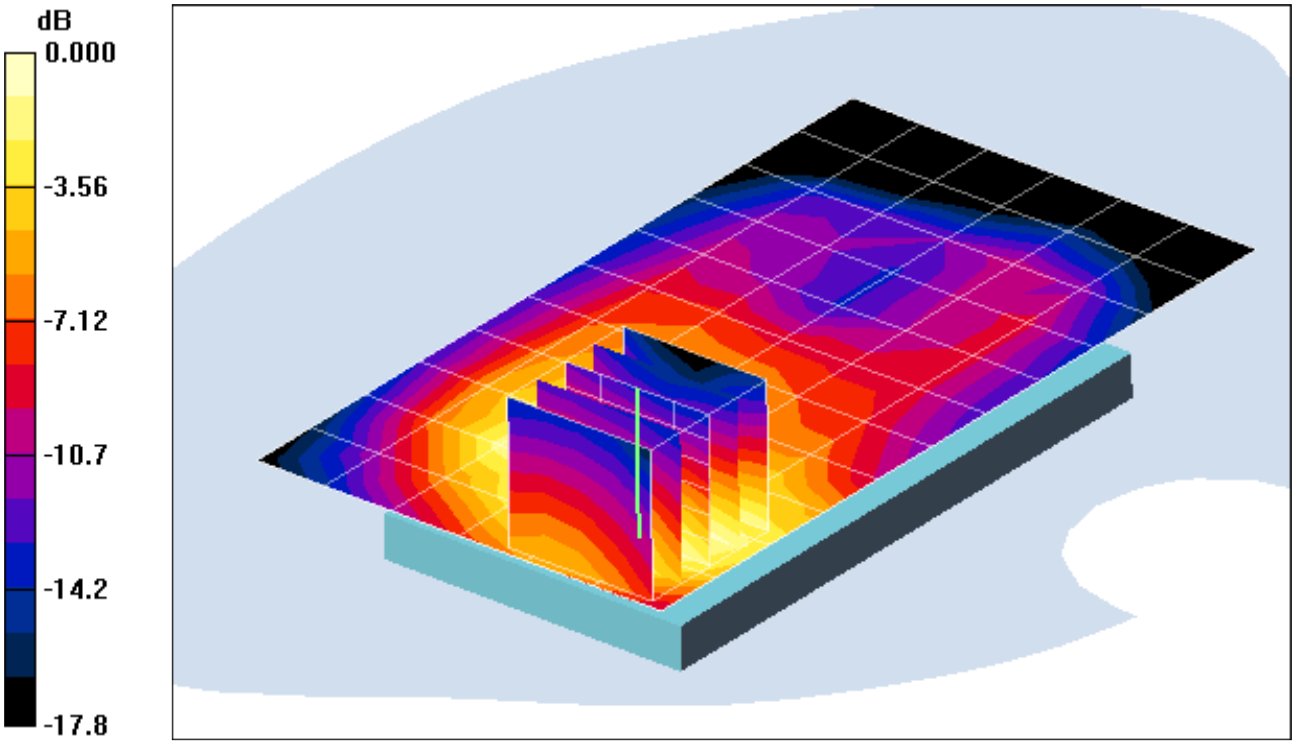


0 dB = 0.508mW/g

# PCTEST ENGINEERING LABORATORY, INC.

**DUT: A3LGTI9100P; Type: 850/1900 GSM/GPRS/EDGE/WCDMA/HSPA Phone with Bluetooth, WLAN, and NFC; Serial: FI-167-A**

Communication System: GSM1900 GPRS; 2 Tx slots; Frequency: 1880 MHz;Duty Cycle: 1:4.15
Medium: 1900 Body Medium parameters used:
f = 1880 MHz; $\sigma$ = 1.5 mho/m; $\varepsilon_r$ = 53.1; $\rho$ = 1000 kg/m$^3$
Phantom section: Flat Section; Space: 1.0 cm

Test Date: 07-25-2011; Ambient Temp: 23.7°C; Tissue Temp: 21.8°C

Probe: ES3DV2 - SN3022; ConvF(4.34, 4.34, 4.34); Calibrated: 9/21/2010
Sensor-Surface: 4mm (Mechanical Surface Detection)
Electronics: DAE4 Sn704; Calibrated: 3/17/2011
Phantom: SAM with CRP; Type: SAM; Serial: TP1375
Measurement SW: DASY4, V4.7 Build 80; Postprocessing SW: SEMCAD, V1.8 Build 186

## Mode: GPRS 1900, Body SAR, Bottom Edge, Mid.ch, 2 Tx Slots

**Area Scan (5x7x1):** Measurement grid: dx=15mm, dy=15mm
**Zoom Scan (5x5x7)/Cube 0:** Measurement grid: dx=8mm, dy=8mm, dz=5mm
Reference Value = 21.2 V/m
Peak SAR (extrapolated) = 1.26 W/kg
**SAR(1 g) = 0.771 mW/g; SAR(10 g) = 0.412 mW/g**

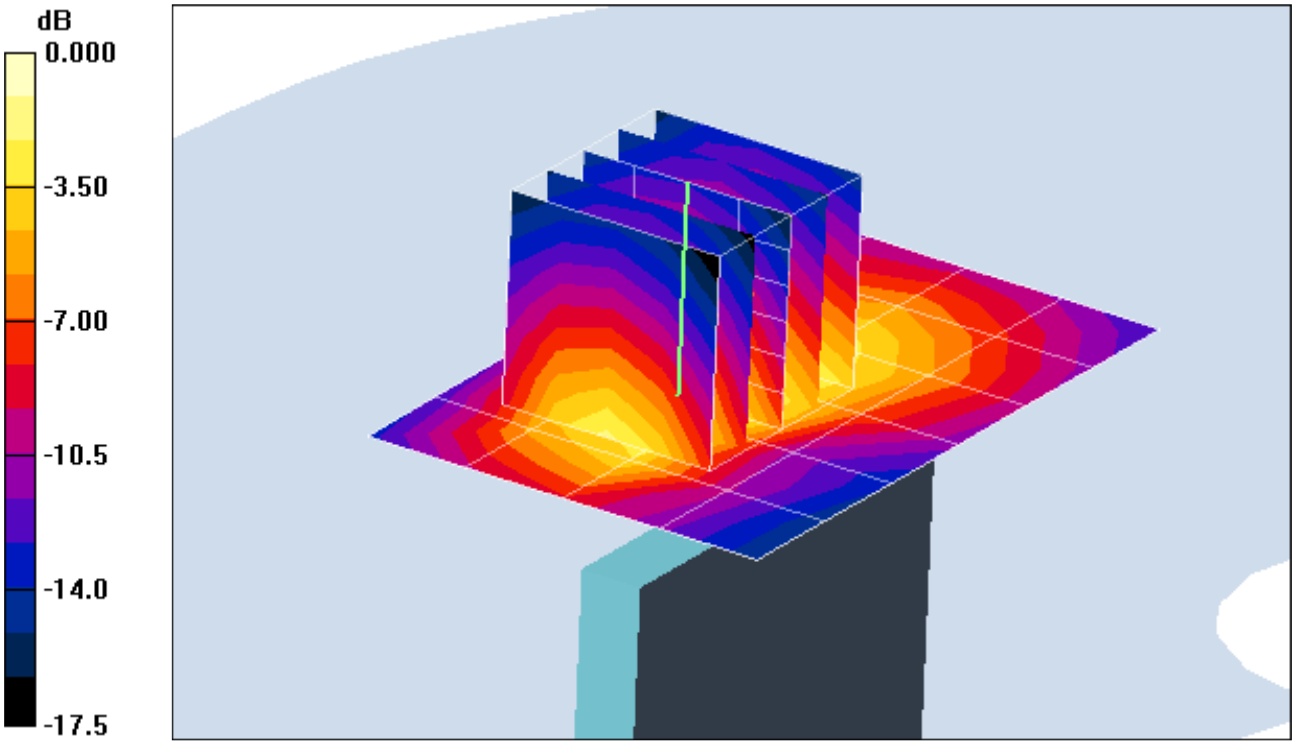


0 dB = 0.880mW/g

# PCTEST ENGINEERING LABORATORY, INC.

**DUT: A3LGTI9100P; Type: 850/1900 GSM/GPRS/EDGE/WCDMA/HSPA Phone with Bluetooth, WLAN and NFC; Serial: FI-167-A**

Communication System: GSM1900 GPRS; 2 Tx slots; Frequency: 1880 MHz;Duty Cycle: 1:4.15
Medium: 1900 Body Medium parameters used:
f = 1880 MHz; $\sigma$ = 1.5 mho/m; $\varepsilon_r$ = 53.15; $\rho$ = 1000 kg/m$^3$
Phantom section: Flat Section; Space: 1.0 cm

Test Date: 07-25-2011; Ambient Temp: 23.7°C; Tissue Temp: 21.8°C

Probe: ES3DV2 - SN3022; ConvF(4.34, 4.34, 4.34); Calibrated: 9/21/2010
Sensor-Surface: 4mm (Mechanical Surface Detection)
Electronics: DAE4 Sn704; Calibrated: 3/17/2011
Phantom: SAM with CRP; Type: SAM; Serial: TP1375
Measurement SW: DASY4, V4.7 Build 80; Postprocessing SW: SEMCAD, V1.8 Build 186

## Mode: GPRS 1900, Body SAR, Right Edge, Mid.ch, 2 Tx Slots

**Area Scan (5x13x1):** Measurement grid: dx=15mm, dy=15mm
**Zoom Scan (5x5x7)/Cube 0:** Measurement grid: dx=8mm, dy=8mm, dz=5mm
Reference Value = 15.0 V/m
Peak SAR (extrapolated) = 0.445 W/kg
**SAR(1 g) = 0.283 mW/g; SAR(10 g) = 0.162 mW/g**

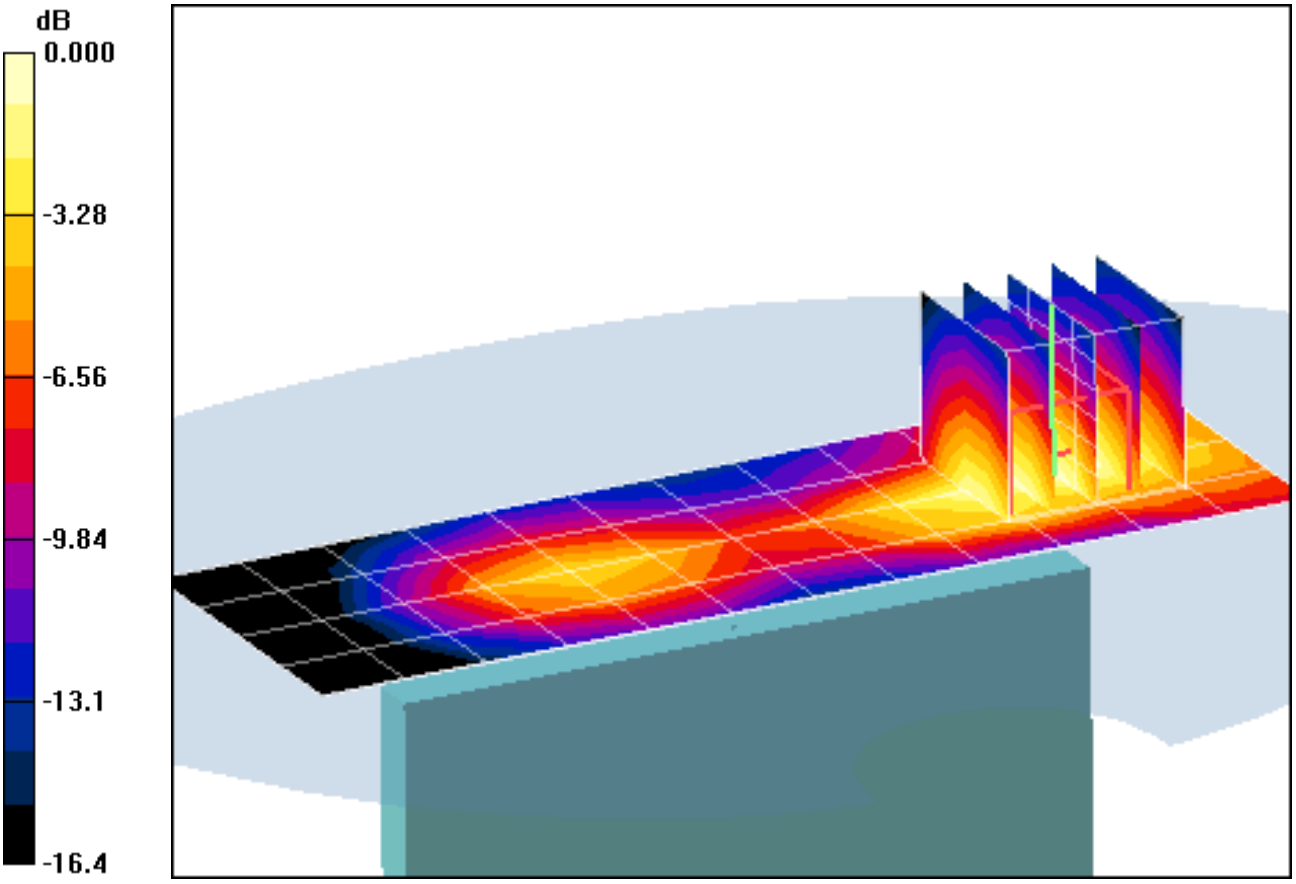


0 dB = 0.321mW/g

# PCTEST ENGINEERING LABORATORY, INC.

**DUT: A3LGTI9100P; Type: 850/1900 GSM/GPRS/EDGE/WCDMA/HSPA Phone with Bluetooth, WLAN and NFC; Serial: FI-167-A**

Communication System: WCDMA850; Frequency: 836.6 MHz;Duty Cycle: 1:1
Medium: 835 Body Medium parameters used (interpolated):
f = 836.6 MHz; $\sigma$ = 0.987 mho/m; $\varepsilon_r$ = 54.9; $\rho$ = 1000 kg/m$^3$
Phantom section: Flat Section; Space: 1.0 cm

Test Date: 07-25-2011; Ambient Temp: 24.0 °C; Tissue Temp: 22.2 °C

Probe: ES3DV3 - SN3258; ConvF(6.12, 6.12, 6.12); Calibrated: 4/8/2011
Sensor-Surface: 4mm (Mechanical Surface Detection)
Electronics: DAE4 Sn649; Calibrated: 2/21/2011
Phantom: SAM Main; Type: SAM 4.0; Serial: TP-1106
Measurement SW: DASY4, V4.7 Build 80; Postprocessing SW: SEMCAD, V1.8 Build 186

**Mode: WCDMA 850, Body SAR, Back side, Mid.ch**

**Area Scan (7x12x1):** Measurement grid: dx=15mm, dy=15mm
**Zoom Scan (5x5x7)/Cube 0:** Measurement grid: dx=8mm, dy=8mm, dz=5mm
Reference Value = 19.7 V/m
Peak SAR (extrapolated) = 0.465 W/kg
**SAR(1 g) = 0.363 mW/g; SAR(10 g) = 0.273 mW/g**

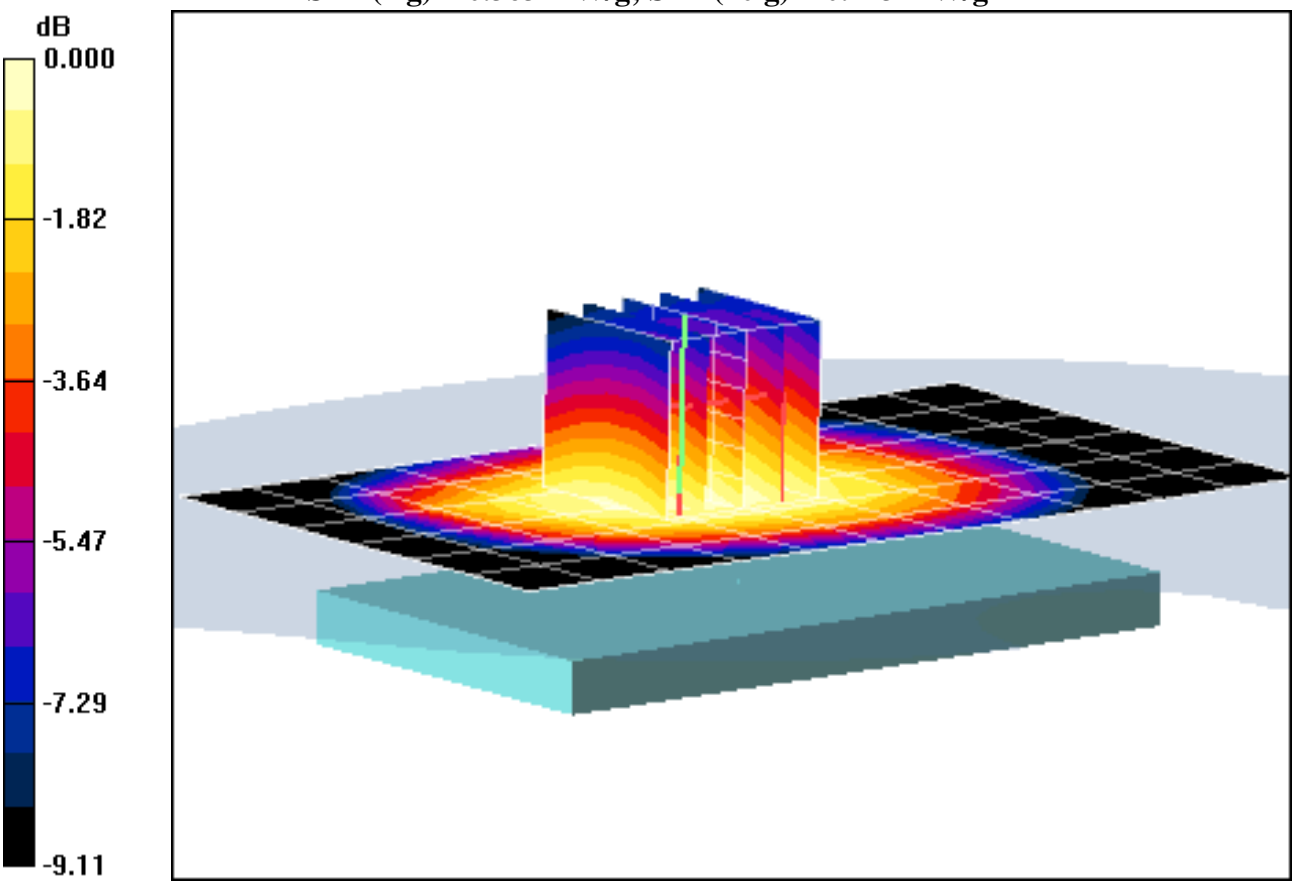


0 dB = 0.382mW/g

# PCTEST ENGINEERING LABORATORY, INC.

**DUT: A3LGTI9100P; Type: 850/1900 GSM/GPRS/EDGE/WCDMA/HSPA Phone with Bluetooth, WLAN and NFC; Serial: FI-167-A**

Communication System: WCDMA850; Frequency: 836.6 MHz;Duty Cycle: 1:1
Medium: 835 Body Medium parameters used (interpolated):
f = 836.6 MHz; $\sigma$ = 0.987 mho/m; $\varepsilon_r$ = 54.9; $\rho$ = 1000 kg/m$^3$
Phantom section: Flat Section; Space: 1.0 cm

Test Date: 07-25-2011; Ambient Temp: 24.0 °C; Tissue Temp: 22.2 °C

Probe: ES3DV3 - SN3258; ConvF(6.12, 6.12, 6.12); Calibrated: 4/8/2011
Sensor-Surface: 4mm (Mechanical Surface Detection)
Electronics: DAE4 Sn649; Calibrated: 2/21/2011
Phantom: SAM Main; Type: SAM 4.0; Serial: TP-1106
Measurement SW: DASY4, V4.7 Build 80; Postprocessing SW: SEMCAD, V1.8 Build 186

## Mode: WCDMA 850, Body SAR, Front side, Mid.ch

**Area Scan (7x12x1):** Measurement grid: dx=15mm, dy=15mm
**Zoom Scan (5x5x7)/Cube 0:** Measurement grid: dx=8mm, dy=8mm, dz=5mm
Reference Value = 12.9 V/m
Peak SAR (extrapolated) = 0.197 W/kg
**SAR(1 g) = 0.156 mW/g; SAR(10 g) = 0.119 mW/g**

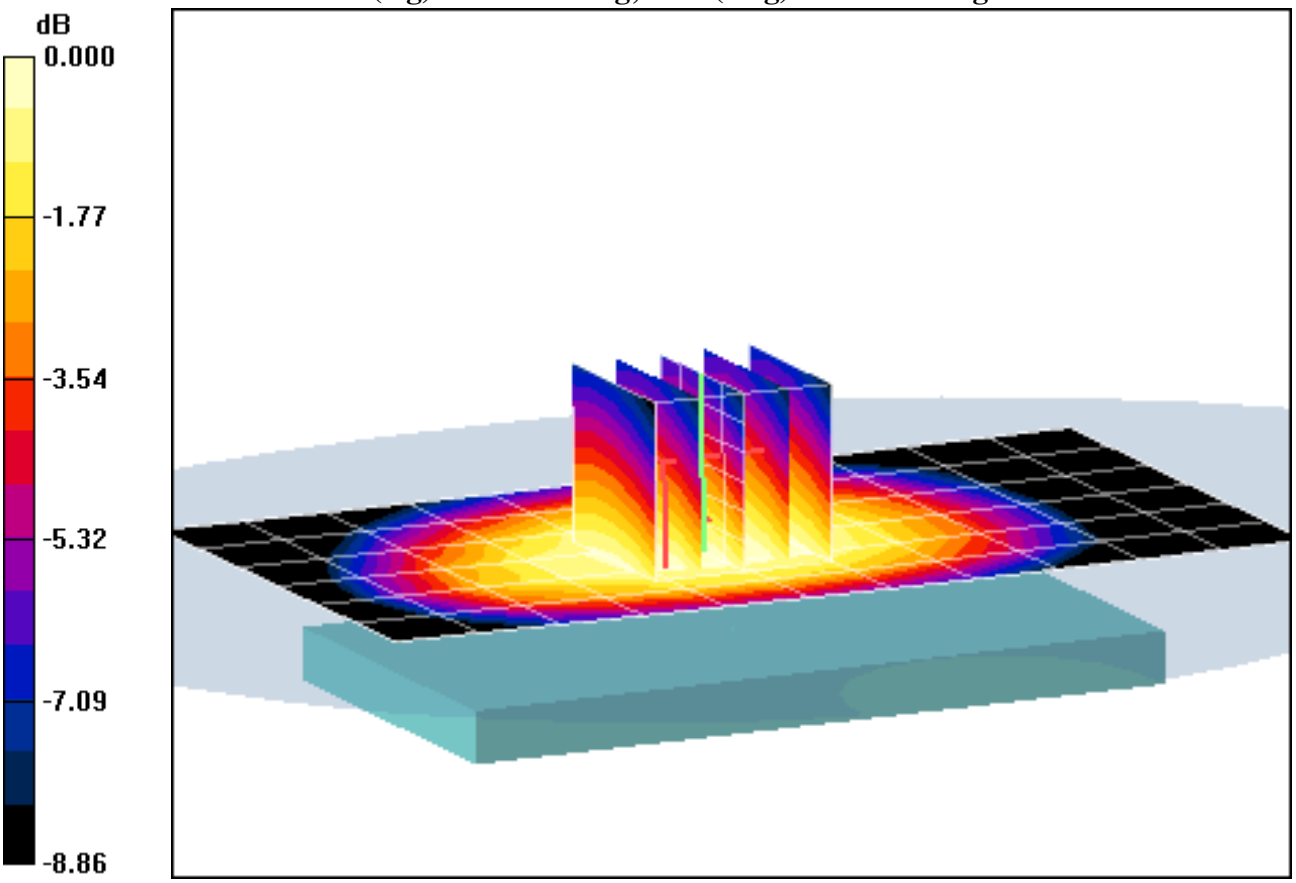


0 dB = 0.163mW/g

# PCTEST ENGINEERING LABORATORY, INC.

**DUT: A3LGTI9100P; Type: 850/1900 GSM/GPRS/EDGE/WCDMA/HSPA Phone with Bluetooth, WLAN and NFC; Serial: FI-167-A**

Communication System: WCDMA850; Frequency: 836.6 MHz;Duty Cycle: 1:1
Medium: 835 Body Medium parameters used (interpolated):
f = 836.6 MHz; $\sigma$ = 0.987 mho/m; $\varepsilon_r$ = 54.9; $\rho$ = 1000 kg/m$^3$
Phantom section: Flat Section; Space: 1.0 cm

Test Date: 07-25-2011; Ambient Temp: 24.0 °C; Tissue Temp: 22.2 °C

Probe: ES3DV3 - SN3258; ConvF(6.12, 6.12, 6.12); Calibrated: 4/8/2011
Sensor-Surface: 4mm (Mechanical Surface Detection)
Electronics: DAE4 Sn649; Calibrated: 2/21/2011
Phantom: SAM Main; Type: SAM 4.0; Serial: TP-1106
Measurement SW: DASY4, V4.7 Build 80; Postprocessing SW: SEMCAD, V1.8 Build 186

**Mode: WCDMA 850, Body SAR, Bottom Edge, Mid.ch**

**Area Scan (5x7x1):** Measurement grid: dx=15mm, dy=15mm
**Zoom Scan (5x5x7)/Cube 0:** Measurement grid: dx=8mm, dy=8mm, dz=5mm
Reference Value = 8.09 V/m
Peak SAR (extrapolated) = 0.108 W/kg
**SAR(1 g) = 0.0625 mW/g; SAR(10 g) = 0.038 mW/g**

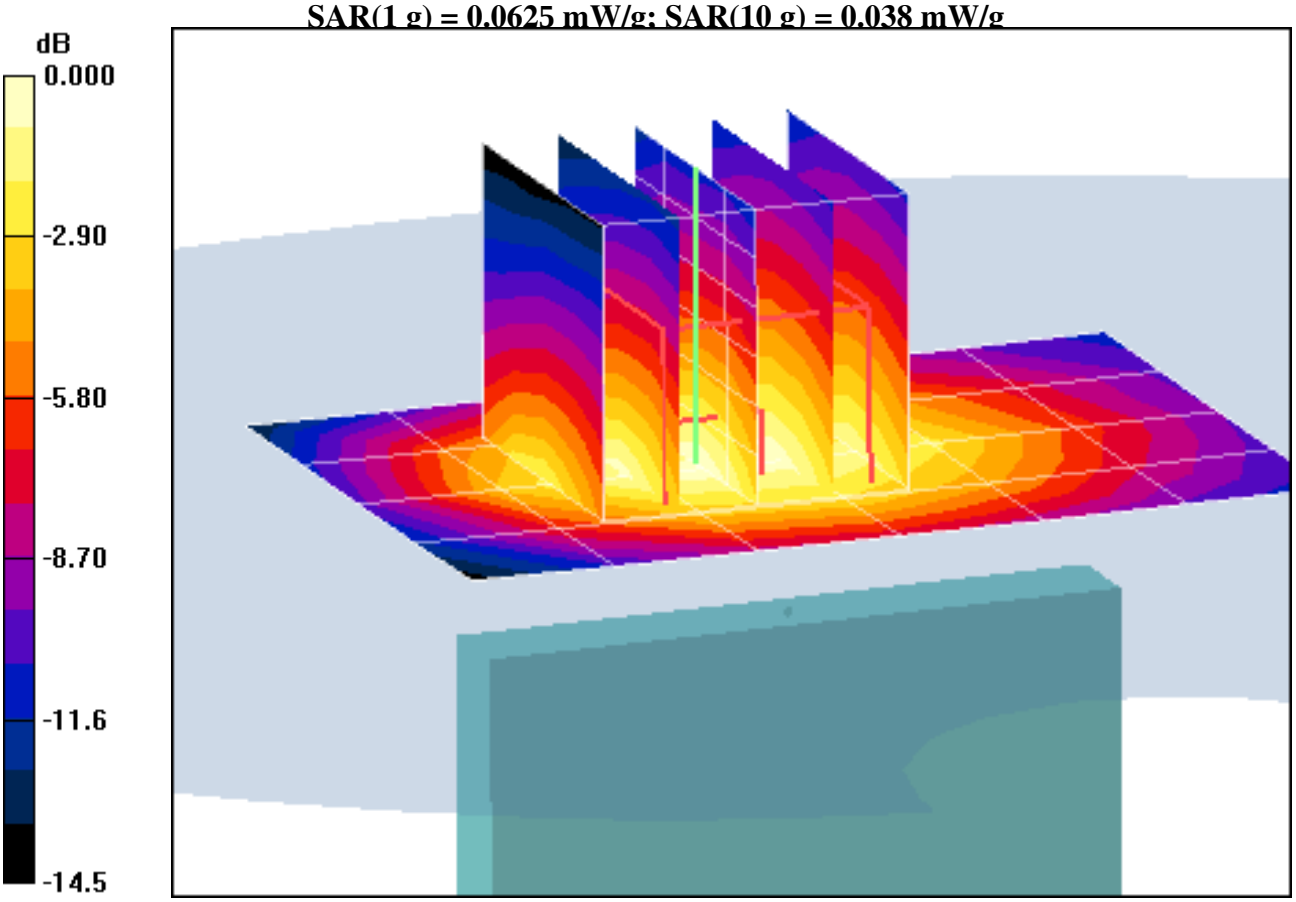


0 dB = 0.068mW/g

# PCTEST ENGINEERING LABORATORY, INC.

**DUT: A3LGTI9100P; Type: 850/1900 GSM/GPRS/EDGE/WCDMA/HSPA Phone with Bluetooth, WLAN and NFC; Serial: FI-167-A**

Communication System: WCDMA850; Frequency: 836.6 MHz;Duty Cycle: 1:1
Medium: 835 Body Medium parameters used (interpolated):
f = 836.6 MHz; $\sigma$ = 0.987 mho/m; $\varepsilon_r$ = 54.9; $\rho$ = 1000 kg/m$^3$
Phantom section: Flat Section; Space: 1.0 cm

Test Date: 07-25-2011; Ambient Temp: 24.0 °C; Tissue Temp: 22.2 °C

Probe: ES3DV3 - SN3258; ConvF(6.12, 6.12, 6.12); Calibrated: 4/8/2011
Sensor-Surface: 4mm (Mechanical Surface Detection)
Electronics: DAE4 Sn649; Calibrated: 2/21/2011
Phantom: SAM Main; Type: SAM 4.0; Serial: TP-1106
Measurement SW: DASY4, V4.7 Build 80; Postprocessing SW: SEMCAD, V1.8 Build 186

**Mode: WCDMA 850, Body SAR, Right Edge, Mid.ch**

**Area Scan (5x13x1):** Measurement grid: dx=15mm, dy=15mm
**Zoom Scan (5x5x7)/Cube 0:** Measurement grid: dx=8mm, dy=8mm, dz=5mm
Reference Value = 17.6 V/m
Peak SAR (extrapolated) = 0.403 W/kg
**SAR(1 g) = 0.281 mW/g; SAR(10 g) = 0.192 mW/g**

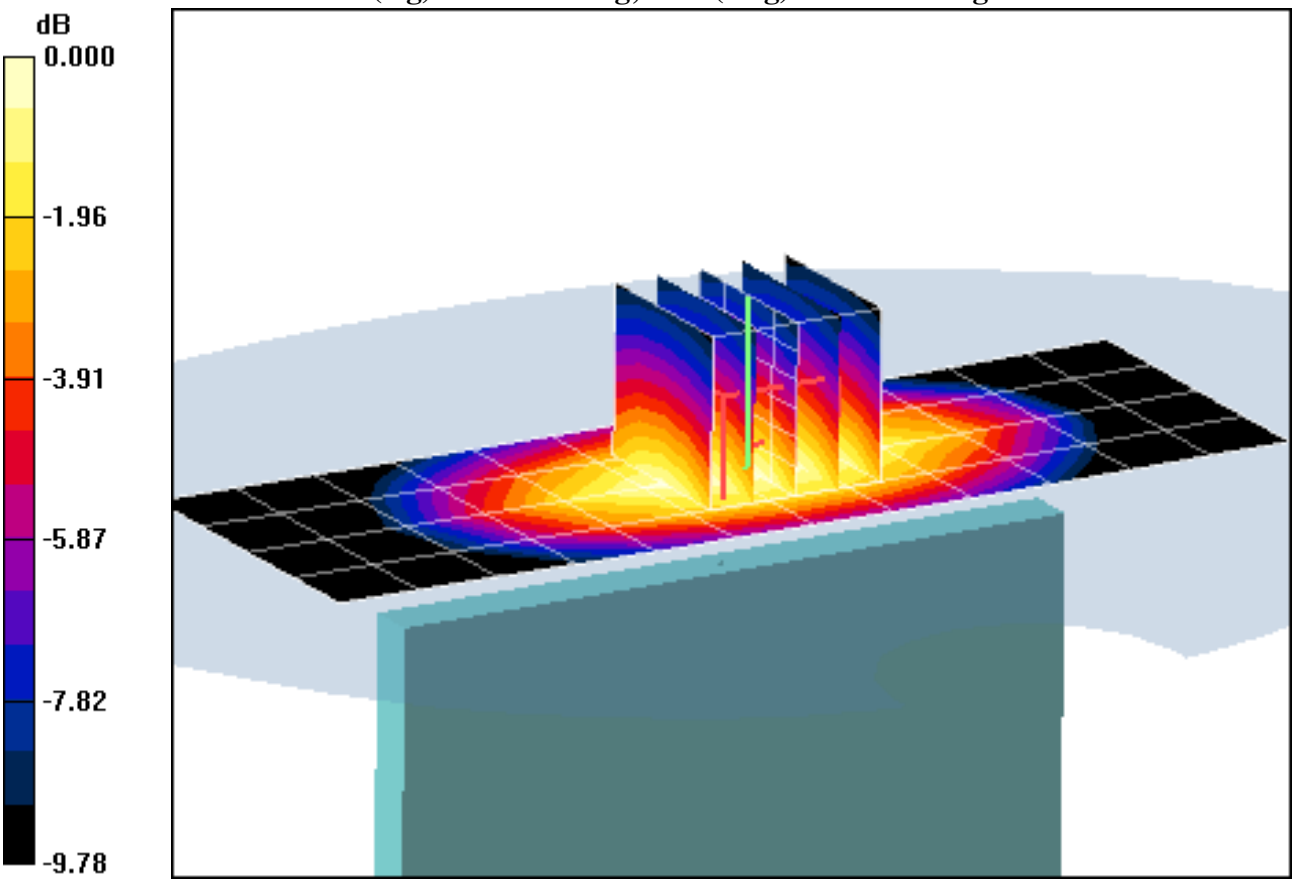


0 dB = 0.302mW/g

# PCTEST ENGINEERING LABORATORY, INC.

**DUT: A3LGTI9100P; Type: 850/1900 GSM/GPRS/EDGE/WCDMA/HSPA Phone with Bluetooth, WLAN, and NFC; Serial: FI-167-A**

Communication System: WCDMA1900; Frequency: 1907.6 MHz;Duty Cycle: 1:1
Medium: 1900 Body Medium parameters used (interpolated):
f = 1907.6 MHz; $\sigma$ = 1.52 mho/m; $\varepsilon_r$ = 53.25; $\rho$ = 1000 kg/m$^3$
Phantom section: Flat Section; Space: 1.0 cm

Test Date: 07-25-2011; Ambient Temp: 23.7°C; Tissue Temp: 21.8°C

Probe: ES3DV2 - SN3022; ConvF(4.34, 4.34, 4.34); Calibrated: 9/21/2010
Sensor-Surface: 4mm (Mechanical Surface Detection)
Electronics: DAE4 Sn704; Calibrated: 3/17/2011
Phantom: SAM with CRP; Type: SAM; Serial: TP1375
Measurement SW: DASY4, V4.7 Build 80; Postprocessing SW: SEMCAD, V1.8 Build 186

**Mode: WCDMA 1900, Body SAR, Back side, High.ch**

**Area Scan (7x12x1):** Measurement grid: dx=15mm, dy=15mm
**Zoom Scan (5x5x7)/Cube 0:** Measurement grid: dx=8mm, dy=8mm, dz=5mm
Reference Value = 28.4 V/m
Peak SAR (extrapolated) = 1.89 W/kg
**SAR(1 g) = 1.12 mW/g; SAR(10 g) = 0.572 mW/g**

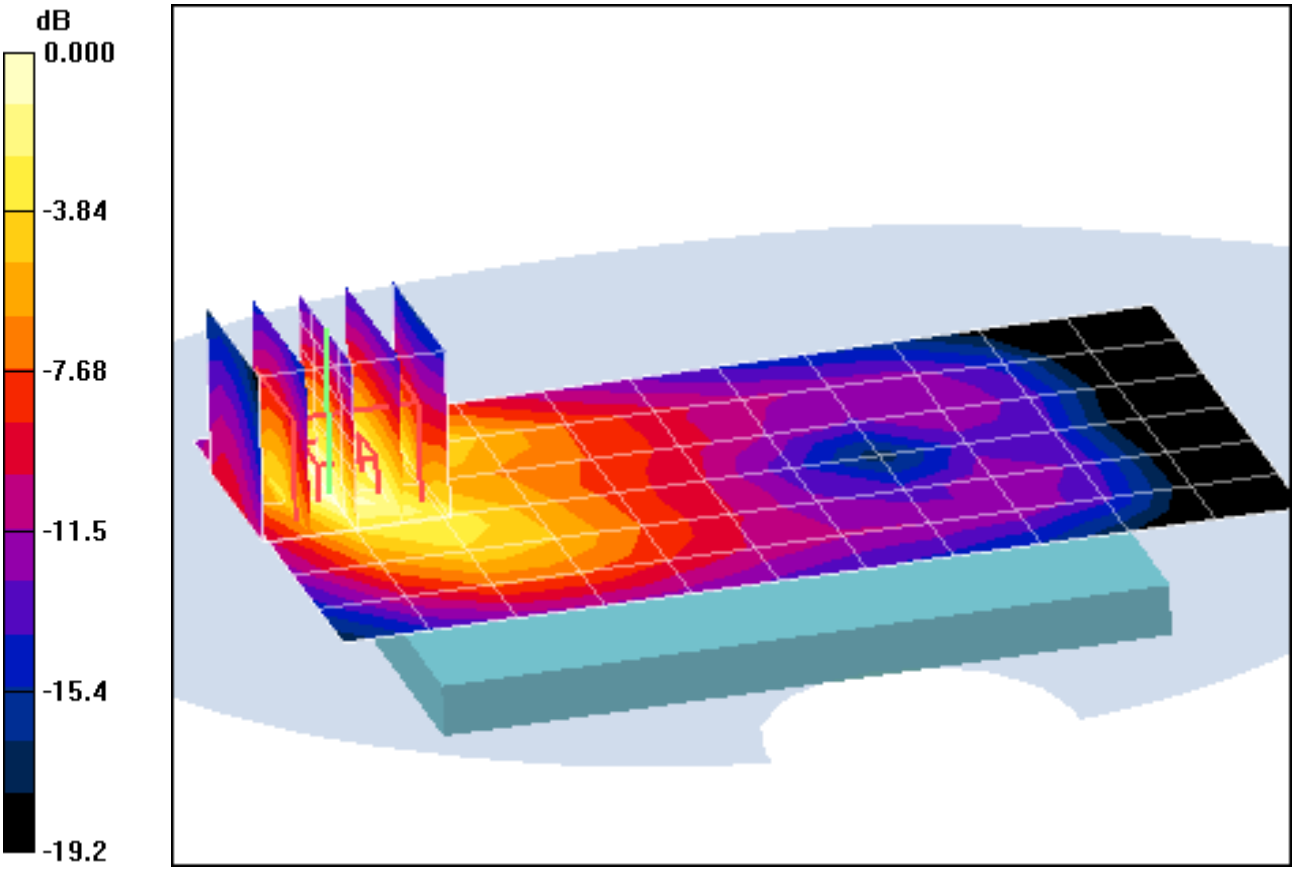


0 dB = 1.17mW/g

# PCTEST ENGINEERING LABORATORY, INC.

**DUT: A3LGTI9100P; Type: 850/1900 GSM/GPRS/EDGE/WCDMA/HSPA Phone with Bluetooth, WLAN and NFC; Serial: FI-167-A**

Communication System: WCDMA1900; Frequency: 1907.6 MHz;Duty Cycle: 1:1
Medium: 1900 Body Medium parameters used (interpolated):
f = 1907.6 MHz; $\sigma$ = 1.52 mho/m; $\varepsilon_r$ = 53.25; $\rho$ = 1000 kg/m$^3$
Phantom section: Flat Section; Space: 1.0 cm

Test Date: 07-25-2011; Ambient Temp: 23.7°C; Tissue Temp: 21.8°C

Probe: ES3DV2 - SN3022; ConvF(4.34, 4.34, 4.34); Calibrated: 9/21/2010
Sensor-Surface: 4mm (Mechanical Surface Detection)
Electronics: DAE4 Sn704; Calibrated: 3/17/2011
Phantom: SAM with CRP; Type: SAM; Serial: TP1375
Measurement SW: DASY4, V4.7 Build 80; Postprocessing SW: SEMCAD, V1.8 Build 186

## Mode: WCDMA 1900, Body SAR, Back side, High.ch

**Area Scan (7x12x1):** Measurement grid: dx=15mm, dy=15mm
**Zoom Scan (5x5x7)/Cube 0:** Measurement grid: dx=8mm, dy=8mm, dz=5mm
Reference Value = 28.4 V/m
Peak SAR (extrapolated) = 1.89 W/kg
**SAR(1 g) = 1.12 mW/g; SAR(10 g) = 0.572 mW/g**

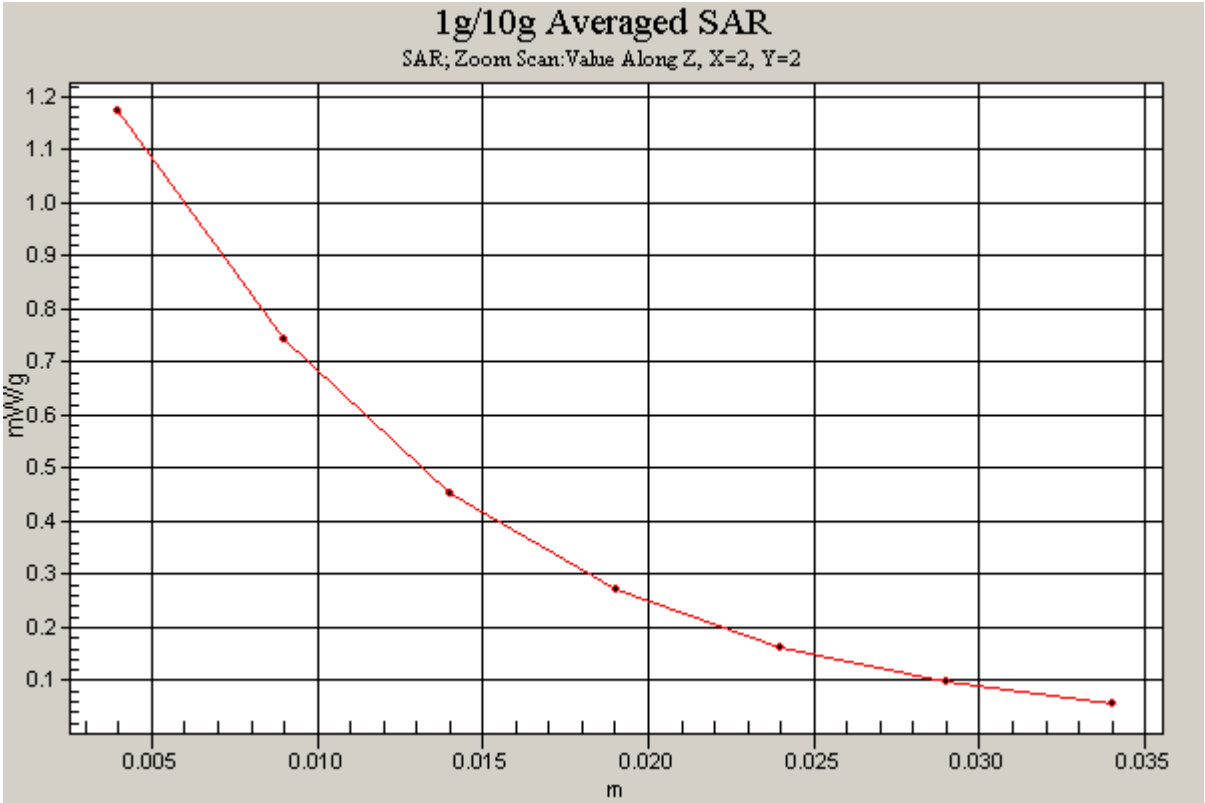

# PCTEST ENGINEERING LABORATORY, INC.

**DUT: A3LGTI9100P; Type: 850/1900 GSM/GPRS/EDGE/WCDMA/HSPA Phone with Bluetooth, WLAN and NFC; Serial: FI-167-A**

Communication System: WCDMA1900; Frequency: 1880 MHz;Duty Cycle: 1:1
Medium: 1900 Body Medium parameters used:
f = 1880 MHz; $\sigma$ = 1.5 mho/m; $\varepsilon_r$ = 53.15; $\rho$ = 1000 kg/m$^3$
Phantom section: Flat Section; Space: 1.0 cm

Test Date: 07-25-2011; Ambient Temp: 23.7°C; Tissue Temp: 21.8°C

Probe: ES3DV2 - SN3022; ConvF(4.34, 4.34, 4.34); Calibrated: 9/21/2010
Sensor-Surface: 4mm (Mechanical Surface Detection)
Electronics: DAE4 Sn704; Calibrated: 3/17/2011
Phantom: SAM with CRP; Type: SAM; Serial: TP1375
Measurement SW: DASY4, V4.7 Build 80; Postprocessing SW: SEMCAD, V1.8 Build 186

## Mode: WCDMA 1900, Body SAR, Front side, Mid.ch

**Area Scan (7x12x1):** Measurement grid: dx=15mm, dy=15mm
**Zoom Scan (5x5x7)/Cube 0:** Measurement grid: dx=8mm, dy=8mm, dz=5mm
Reference Value = 18.9 V/m
Peak SAR (extrapolated) = 0.792 W/kg
**SAR(1 g) = 0.500 mW/g; SAR(10 g) = 0.281 mW/g**

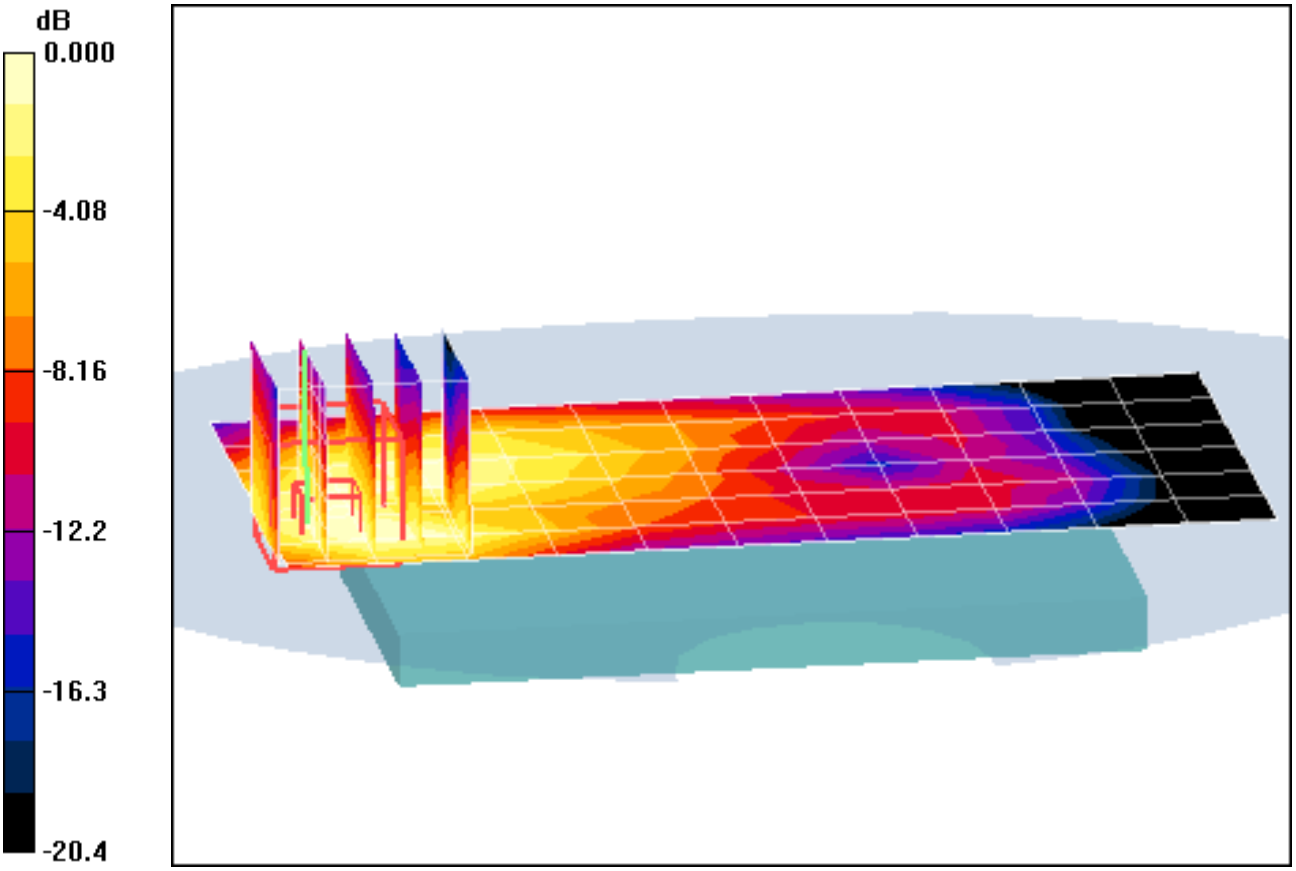


0 dB = 0.531mW/g

# PCTEST ENGINEERING LABORATORY, INC.

**DUT: A3LGTI9100P; Type: 850/1900 GSM/GPRS/EDGE/WCDMA/HSPA Phone with Bluetooth, WLAN and NFC; Serial: FI-167-A**

Communication System: WCDMA1900; Frequency: 1880 MHz;Duty Cycle: 1:1
Medium: 1900 Body Medium parameters used:
f = 1880 MHz; $\sigma$ = 1.5 mho/m; $\varepsilon_r$ = 53.15; $\rho$ = 1000 kg/m$^3$
Phantom section: Flat Section; Space: 1.0 cm

Test Date: 07-25-2011; Ambient Temp: 23.7°C; Tissue Temp: 21.8°C

Probe: ES3DV2 - SN3022; ConvF(4.34, 4.34, 4.34); Calibrated: 9/21/2010
Sensor-Surface: 4mm (Mechanical Surface Detection)
Electronics: DAE4 Sn704; Calibrated: 3/17/2011
Phantom: SAM with CRP; Type: SAM; Serial: TP1375
Measurement SW: DASY4, V4.7 Build 80; Postprocessing SW: SEMCAD, V1.8 Build 186

## Mode: WCDMA 1900, Body SAR, Bottom Edge, Mid.ch

**Area Scan (5x7x1):** Measurement grid: dx=15mm, dy=15mm
**Zoom Scan (5x5x7)/Cube 0:** Measurement grid: dx=8mm, dy=8mm, dz=5mm
Reference Value = 22.2 V/m
Peak SAR (extrapolated) = 1.49 W/kg
**SAR(1 g) = 0.903 mW/g; SAR(10 g) = 0.486 mW/g**

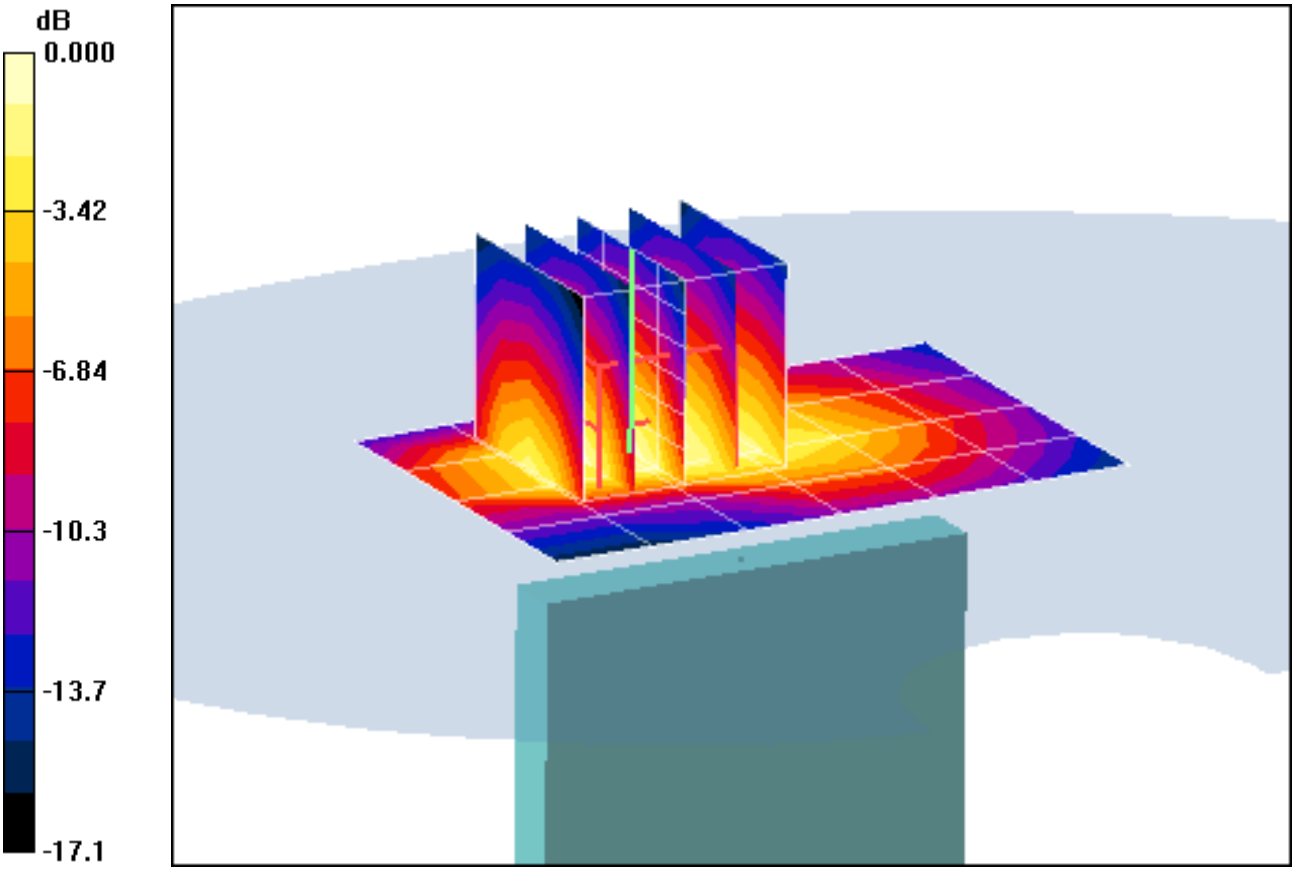


0 dB = 1.02mW/g

# PCTEST ENGINEERING LABORATORY, INC.

**DUT: A3LGTI9100P; Type: 850/1900 GSM/GPRS/EDGE/WCDMA/HSPA Phone with Bluetooth, WLAN and NFC; Serial: FI-167-A**

Communication System: WCDMA1900; Frequency: 1880 MHz;Duty Cycle: 1:1
Medium: 1900 Body Medium parameters used:
f = 1880 MHz; $\sigma$ = 1.5 mho/m; $\varepsilon_r$ = 53.15; $\rho$ = 1000 kg/m$^3$
Phantom section: Flat Section; Space: 1.0 cm

Test Date: 07-25-2011; Ambient Temp: 23.7°C; Tissue Temp: 21.8°C

Probe: ES3DV2 - SN3022; ConvF(4.34, 4.34, 4.34); Calibrated: 9/21/2010
Sensor-Surface: 4mm (Mechanical Surface Detection)
Electronics: DAE4 Sn704; Calibrated: 3/17/2011
Phantom: SAM with CRP; Type: SAM; Serial: TP1375
Measurement SW: DASY4, V4.7 Build 80; Postprocessing SW: SEMCAD, V1.8 Build 186

**Mode: WCDMA 1900, Body SAR, Right Edge, Mid.ch**

**Area Scan (5x13x1):** Measurement grid: dx=15mm, dy=15mm
**Zoom Scan (5x5x7)/Cube 0:** Measurement grid: dx=8mm, dy=8mm, dz=5mm
Reference Value = 17.3 V/m
Peak SAR (extrapolated) = 0.586 W/kg
**SAR(1 g) = 0.365 mW/g; SAR(10 g) = 0.202 mW/g**

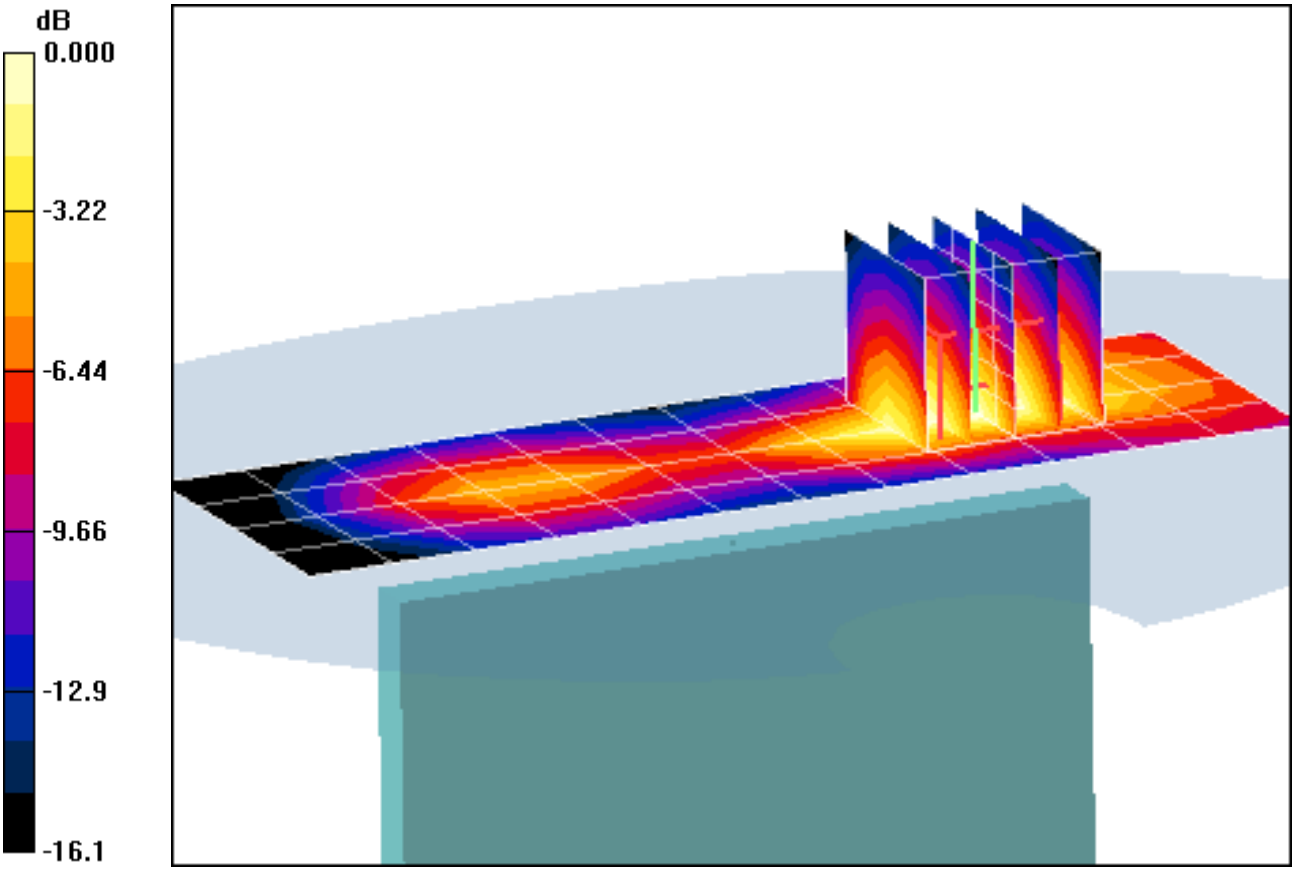


0 dB = 0.414mW/g

# PCTEST ENGINEERING LABORATORY, INC.

**DUT: A3LGTI9100P; Type: 850/1900 GSM/GPRS/EDGE/WCDMA/HSPA Phone with Bluetooth, WLAN and NFC; Serial: FI-167-A**

Communication System: IEEE 802.11b; Frequency: 2437 MHz;Duty Cycle: 1:1
Medium: 2450 Body Medium parameters used (interpolated):
f = 2437 MHz; $\sigma$ = 1.91 mho/m; $\varepsilon_r$ = 52.1; $\rho$ = 1000 kg/m$^3$
Phantom section: Flat Section; Space: 1.0 cm

Test Date: 07-26-2011; Ambient Temp: 23.2°C; Tissue Temp: 21.7°C

Probe: ES3DV3 - SN3258; ConvF(4.34, 4.34, 4.34); Calibrated: 4/8/2011
Sensor-Surface: 3mm (Mechanical Surface Detection)
Electronics: DAE4 Sn649; Calibrated: 2/21/2011
Phantom: SAM Main; Type: SAM 4.0; Serial: TP-1406
Measurement SW: DASY4, V4.7 Build 80; Postprocessing SW: SEMCAD, V1.8 Build 186

## Mode: IEEE 802.11b, Body SAR, Ch.06, 1Mbps, Back Side

**Area Scan (7x12x1):** Measurement grid: dx=15mm, dy=15mm
**Zoom Scan (5x5x7)/Cube 0:** Measurement grid: dx=8mm, dy=8mm, dz=5mm
Reference Value = 6.44 V/m
Peak SAR (extrapolated) = 0.163 W/kg
**SAR(1 g) = 0.085 mW/g; SAR(10 g) = 0.045 mW/g**

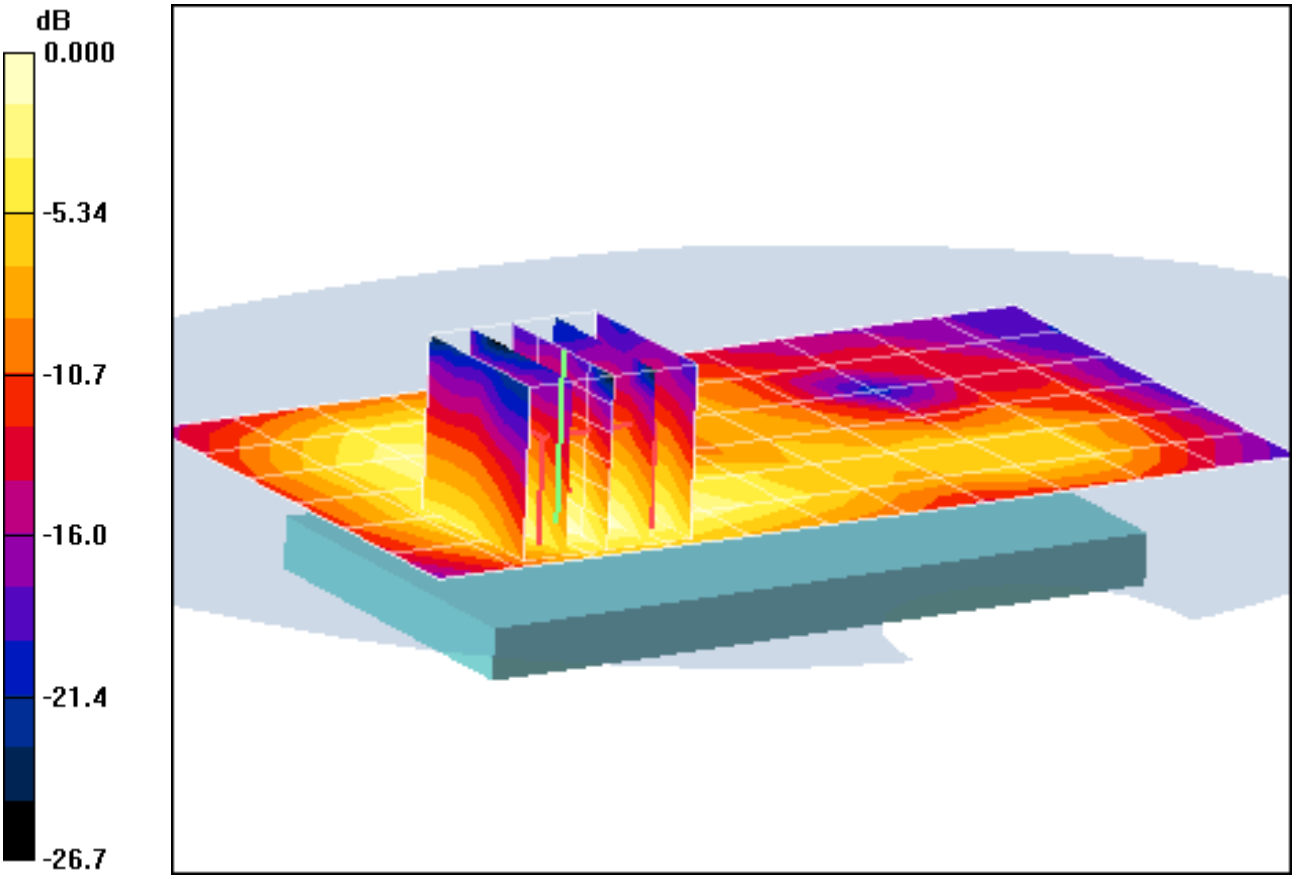


0 dB = 0.108mW/g

# PCTEST ENGINEERING LABORATORY, INC.

**DUT: A3LGTI9100P; Type: 850/1900 GSM/GPRS/EDGE/WCDMA/HSPA Phone with Bluetooth, WLAN and NFC; Serial: FI-167-A**

Communication System: IEEE 802.11b; Frequency: 2437 MHz;Duty Cycle: 1:1
Medium: 2450 Body Medium parameters used (interpolated):
f = 2437 MHz; $\sigma$ = 1.91 mho/m; $\varepsilon_r$ = 52.1; $\rho$ = 1000 kg/m$^3$
Phantom section: Flat Section; Space: 1.0 cm

Test Date: 07-26-2011; Ambient Temp: 23.2°C; Tissue Temp: 21.7°C

Probe: ES3DV3 - SN3258; ConvF(4.34, 4.34, 4.34); Calibrated: 4/8/2011
Sensor-Surface: 3mm (Mechanical Surface Detection)
Electronics: DAE4 Sn649; Calibrated: 2/21/2011
Phantom: SAM Main; Type: SAM 4.0; Serial: TP-1406
Measurement SW: DASY4, V4.7 Build 80; Postprocessing SW: SEMCAD, V1.8 Build 186

## Mode: IEEE 802.11b, Body SAR, Ch.06, 1Mbps, Back Side

**Area Scan (7x12x1):** Measurement grid: dx=15mm, dy=15mm
**Zoom Scan (5x5x7)/Cube 0:** Measurement grid: dx=8mm, dy=8mm, dz=5mm
Reference Value = 6.44 V/m
Peak SAR (extrapolated) = 0.163 W/kg
**SAR(1 g) = 0.085 mW/g; SAR(10 g) = 0.045 mW/g**

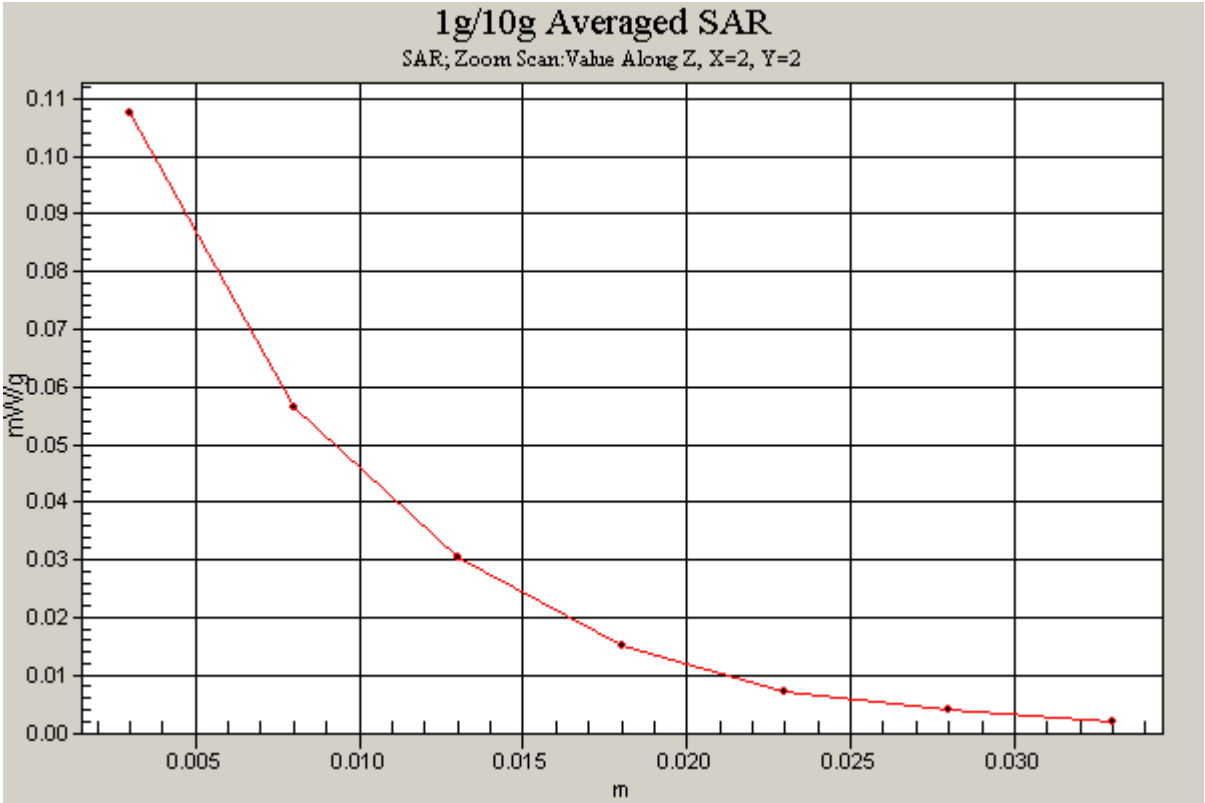

# PCTEST ENGINEERING LABORATORY, INC.

**DUT: A3LGTI9100P; Type: 850/1900 GSM/GPRS/EDGE/WCDMA/HSPA Phone with Bluetooth, WLAN and NFC; Serial: FI-167-A**

Communication System: IEEE 802.11b; Frequency: 2437 MHz;Duty Cycle: 1:1
Medium: 2450 Body Medium parameters used (interpolated):
f = 2437 MHz; $\sigma$ = 1.91 mho/m; $\varepsilon_r$ = 52.1; $\rho$ = 1000 kg/m$^3$
Phantom section: Flat Section; Space: 1.0 cm

Test Date: 07-26-2011; Ambient Temp: 23.2°C; Tissue Temp: 21.7°C

Probe: ES3DV3 - SN3258; ConvF(4.34, 4.34, 4.34); Calibrated: 4/8/2011
Sensor-Surface: 3mm (Mechanical Surface Detection)
Electronics: DAE4 Sn649; Calibrated: 2/21/2011
Phantom: SAM Main; Type: SAM 4.0; Serial: TP-1406
Measurement SW: DASY4, V4.7 Build 80; Postprocessing SW: SEMCAD, V1.8 Build 186

## Mode: IEEE 802.11b, Body SAR, Ch.06, 1Mbps, Front Side

**Area Scan (7x12x1):** Measurement grid: dx=15mm, dy=15mm
**Zoom Scan (5x5x7)/Cube 0:** Measurement grid: dx=8mm, dy=8mm, dz=5mm
Reference Value = 6.52 V/m
Peak SAR (extrapolated) = 0.136 W/kg
**SAR(1 g) = 0.072 mW/g; SAR(10 g) = 0.039 mW/g**

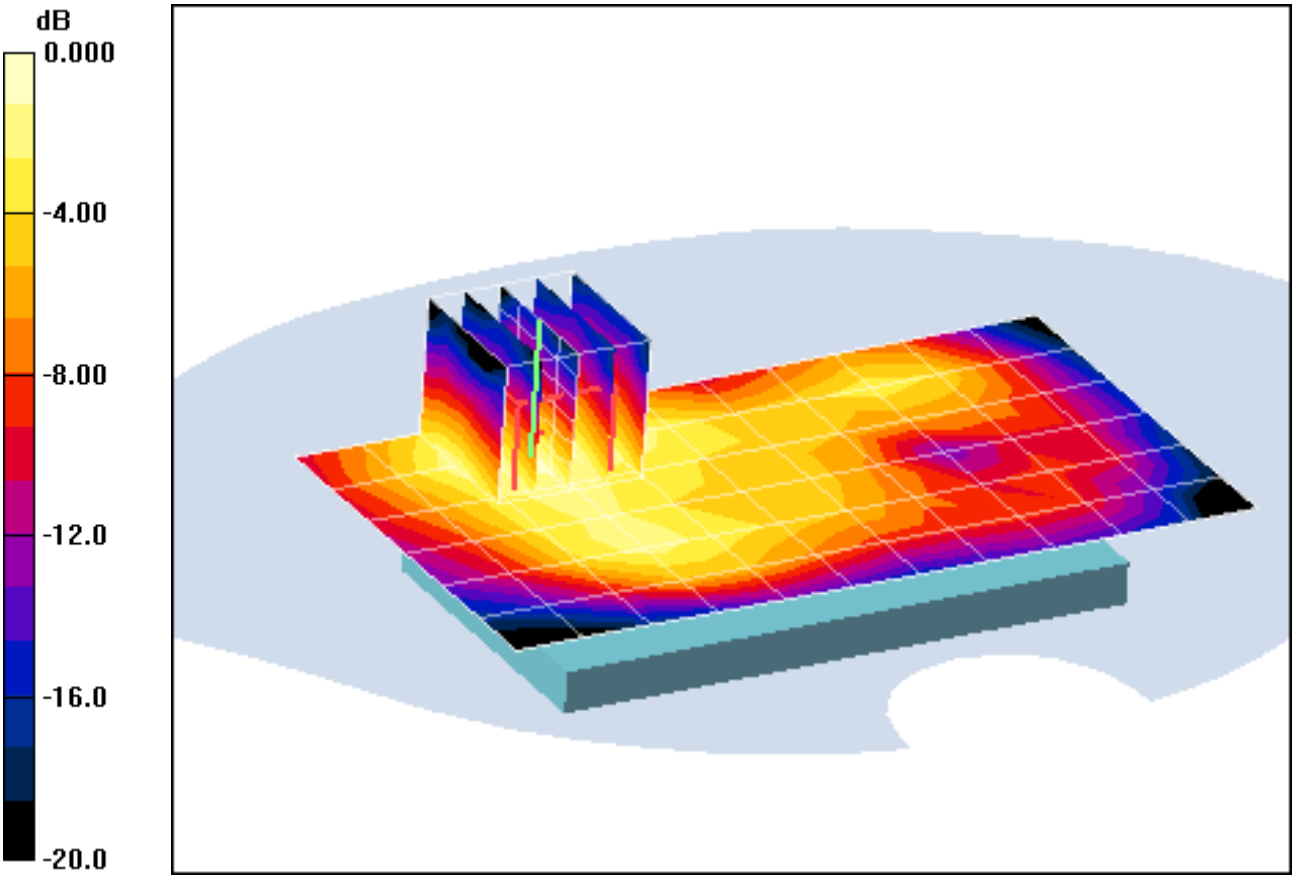


0 dB = 0.089mW/g

# PCTEST ENGINEERING LABORATORY, INC.

**DUT: A3LGTI9100P; Type: 850/1900 GSM/GPRS/EDGE/WCDMA/HSPA Phone with Bluetooth, WLAN and NFC; Serial: FI-167-A**

Communication System: IEEE 802.11b; Frequency: 2437 MHz;Duty Cycle: 1:1
Medium: 2450 Body Medium parameters used (interpolated):
f = 2437 MHz; $\sigma$ = 1.91 mho/m; $\varepsilon_r$ = 52.1; $\rho$ = 1000 kg/m$^3$
Phantom section: Flat Section; Space: 1.0 cm

Test Date: 07-26-2011; Ambient Temp: 23.2°C; Tissue Temp: 21.7°C

Probe: ES3DV3 - SN3258; ConvF(4.34, 4.34, 4.34); Calibrated: 4/8/2011
Sensor-Surface: 3mm (Mechanical Surface Detection)
Electronics: DAE4 Sn649; Calibrated: 2/21/2011
Phantom: SAM Main; Type: SAM 4.0; Serial: TP-1406
Measurement SW: DASY4, V4.7 Build 80; Postprocessing SW: SEMCAD, V1.8 Build 186

## Mode: IEEE 802.11b, Body SAR, Ch.06, 1Mbps, Bottom Edge

**Area Scan (5x7x1):** Measurement grid: dx=15mm, dy=15mm
**Zoom Scan (5x5x7)/Cube 0:** Measurement grid: dx=8mm, dy=8mm, dz=5mm
Reference Value = 6.44 V/m
Peak SAR (extrapolated) = 0.136 W/kg
**SAR(1 g) = 0.073 mW/g; SAR(10 g) = 0.040 mW/g**

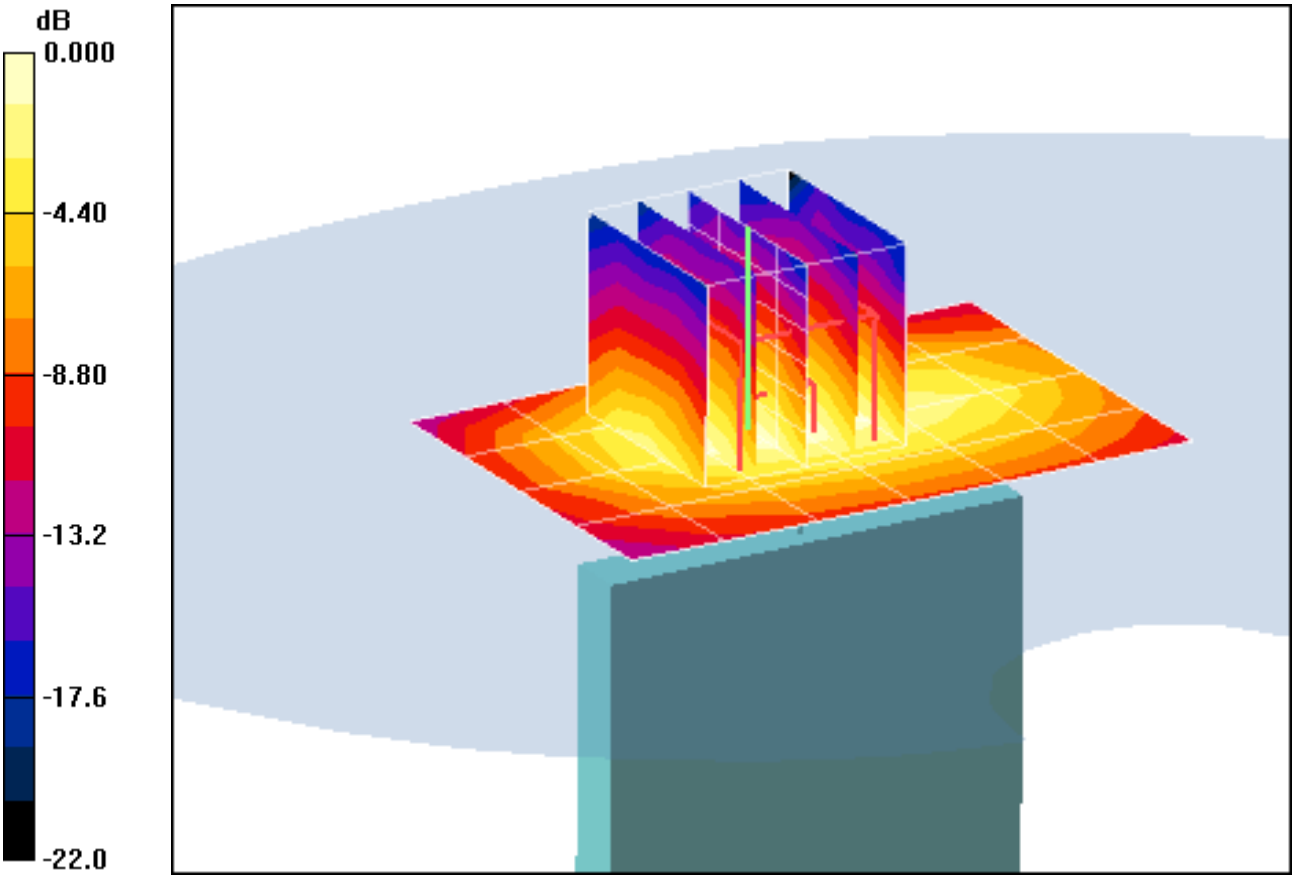


0 dB = 0.090mW/g

# PCTEST ENGINEERING LABORATORY, INC.

**DUT: A3LGTI9100P; Type: 850/1900 GSM/GPRS/EDGE/WCDMA/HSPA Phone with Bluetooth, WLAN and NFC; Serial: FI-167-A**

Communication System: IEEE 802.11b; Frequency: 2437 MHz;Duty Cycle: 1:1
Medium: 2450 Body Medium parameters used (interpolated):
f = 2437 MHz; $\sigma$ = 1.91 mho/m; $\varepsilon_r$ = 52.1; $\rho$ = 1000 kg/m$^3$
Phantom section: Flat Section; Space: 1.0 cm

Test Date: 07-26-2011; Ambient Temp: 23.2°C; Tissue Temp: 21.7°C

Probe: ES3DV3 - SN3258; ConvF(4.34, 4.34, 4.34); Calibrated: 4/8/2011
Sensor-Surface: 3mm (Mechanical Surface Detection)
Electronics: DAE4 Sn649; Calibrated: 2/21/2011
Phantom: SAM Main; Type: SAM 4.0; Serial: TP-1406
Measurement SW: DASY4, V4.7 Build 80; Postprocessing SW: SEMCAD, V1.8 Build 186

## Mode: IEEE 802.11b, Body SAR, Ch.06, 1Mbps, Left Edge

**Area Scan (5x13x1):** Measurement grid: dx=15mm, dy=15mm
**Zoom Scan (5x5x7)/Cube 0:** Measurement grid: dx=8mm, dy=8mm, dz=5mm
Reference Value = 6.91 V/m
Peak SAR (extrapolated) = 0.152 W/kg
**SAR(1 g) = 0.081 mW/g; SAR(10 g) = 0.043 mW/g**

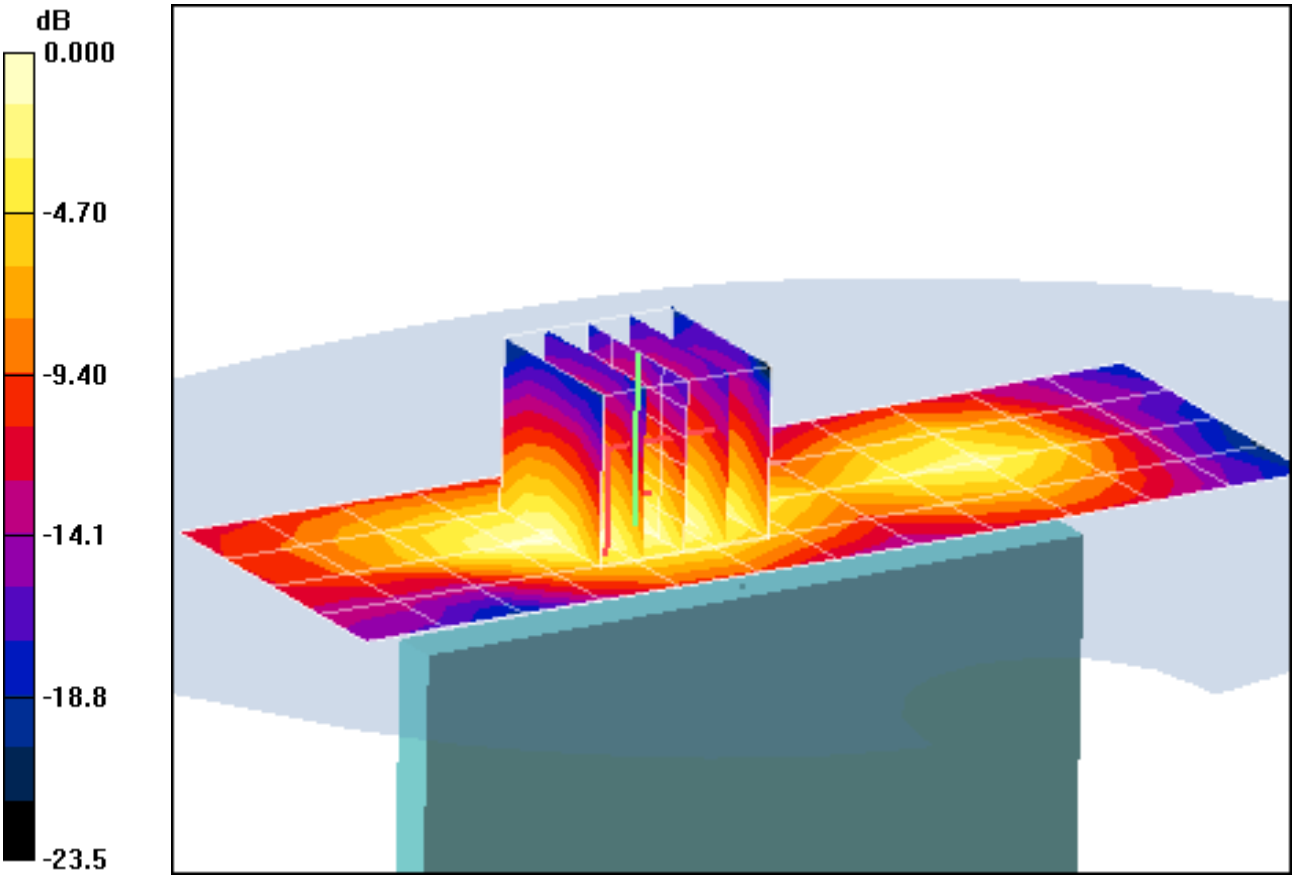


0 dB = 0.103mW/g

# PCTEST ENGINEERING LABORATORY, INC.

**DUT: A3LGTI9100P; Type: 850/1900 GSM/GPRS/EDGE/WCDMA/HSPA Phone with Bluetooth, WLAN, and NFC:; Serial: FI-167-C**

Communication System: IEEE 802.11a 5.2-5.8 GHz Band; Frequency: 5280 MHz;Duty Cycle: 1:1
Medium: 5 GHz Body Medium parameters used (interpolated):
f = 5280 MHz; $\sigma$ = 5.41 mho/m; $\varepsilon_r$ = 47.6; $\rho$ = 1000 kg/m$^3$
Phantom section: Flat Section; Space: 1.0 cm

Test Date: 07-28-2011; Ambient Temp: 22.2 °C; Tissue Temp: 20.5°C

Probe: EX3DV4 - SN3550; ConvF(3.31, 3.31, 3.31); Calibrated: 2/14/2011
Sensor-Surface: 2mm (Mechanical Surface Detection)
Electronics: DAE4 Sn665; Calibrated: 4/20/2011
Phantom: SAM Sub; Type: SAM 4.0; Serial: TP-1357
Measurement SW: DASY4, V4.7 Build 80; Postprocessing SW: SEMCAD, V1.8 Build 186

## Mode: IEEE 802.11a, 5.3 GHz, Body SAR, Ch 56, 6 Mbps, Back Side

**Area Scan (10x16x1):** Measurement grid: dx=10mm, dy=10mm
**Zoom Scan (7x7x11)/Cube 0:** Measurement grid: dx=4mm, dy=4mm, dz=2mm
Reference Value = 3.16 V/m
Peak SAR (extrapolated) = 0.257 W/kg
**SAR(1 g) = 0.046 mW/g; SAR(10 g) = 0.014 mW/g**

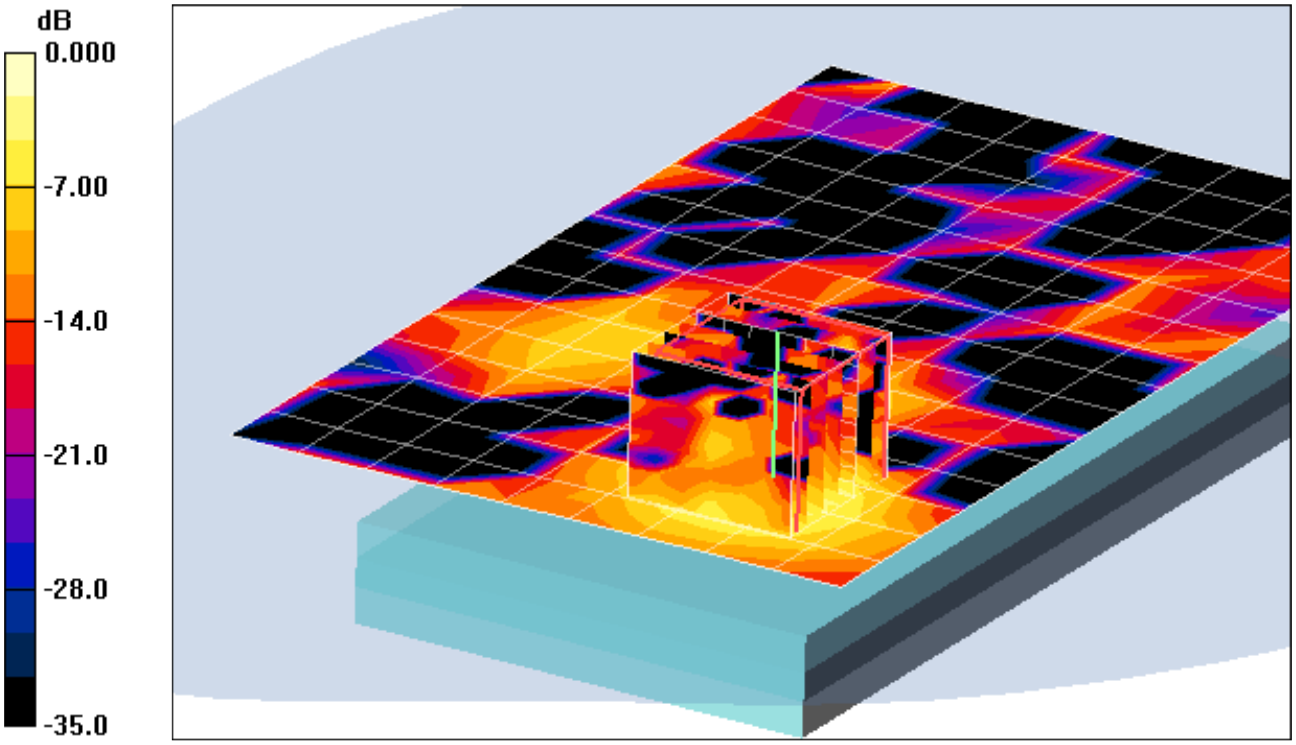


0 dB = 0.095mW/g

# PCTEST ENGINEERING LABORATORY, INC.

**DUT: Dipole 5200 MHz; Type: D5GHzV2; Serial: 1057**

Communication System: CW; Frequency: 5200 MHz;Duty Cycle: 1:1
Medium: 5 GHz Body; Medium parameters used (interpolated):
f = 5200 MHz; $\sigma$ = 5.31 mho/m; $\varepsilon_r$ = 47.9; $\rho$ = 1000 kg/m$^3$
Phantom section: Flat Section; Space: 1.0 cm

Test Date: 07-28-2011; Ambient Temp: 22.2 °C; Tissue Temp: 20.5°C

Probe: EX3DV4 - SN3550; ConvF(3.58, 3.58, 3.58); Calibrated: 2/14/2011
Sensor-Surface: 2mm (Mechanical Surface Detection)
Electronics: DAE4 Sn665; Calibrated: 4/20/2011
Phantom: SAM Sub; Type: SAM 4.0; Serial: TP-1357
Measurement SW: DASY4, V4.7 Build 80; Postprocessing SW: SEMCAD, V1.8 Build 186

## 5200MHz System Verification

**Area Scan (7x9x1):** Measurement grid: dx=10mm, dy=10mm
**Zoom Scan (7x7x11)/Cube 0:** Measurement grid: dx=4mm, dy=4mm, dz=2mm
Input Power = 20.0 dBm (100 mW)
**SAR(1 g) = 8.11 mW/g; SAR(10 g) = 2.23 mW/g**
Deviation = 4.38 %

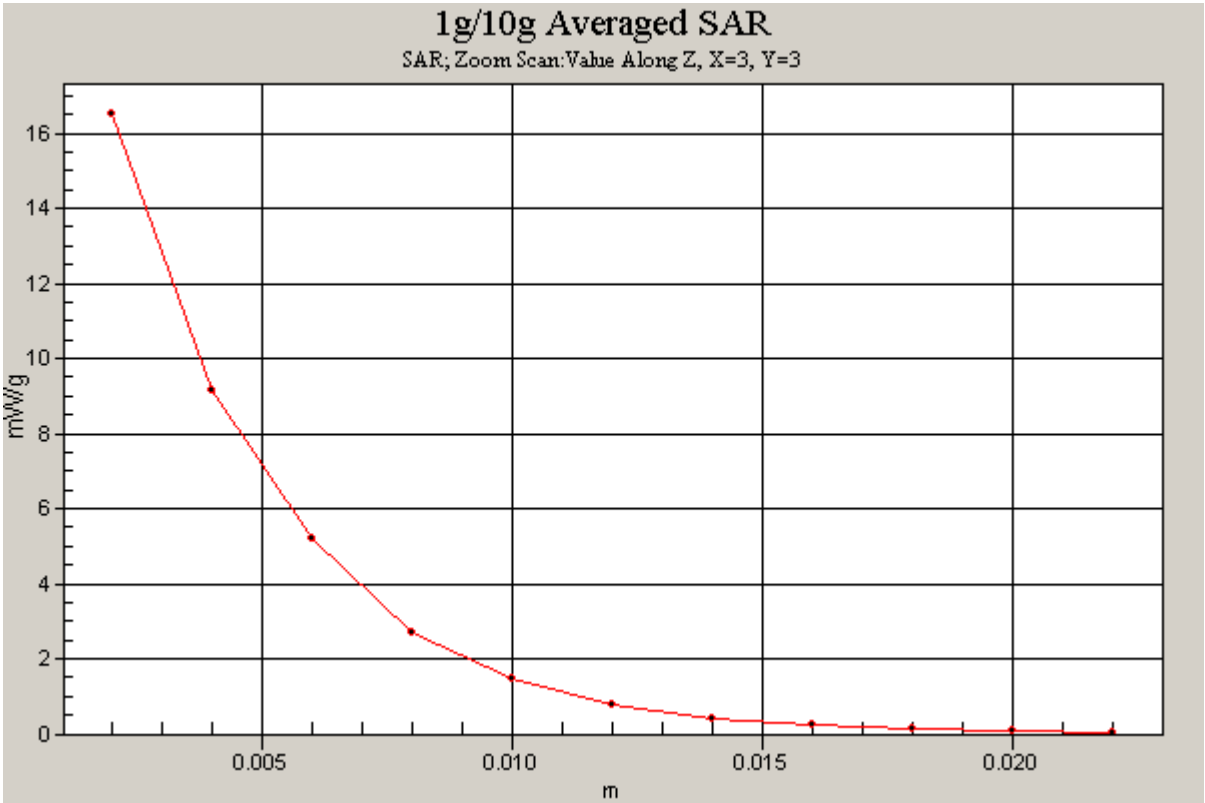

# APPENDIX B: DIPOLE VALIDATION

# PCTEST ENGINEERING LABORATORY, INC.

**DUT: Dipole 835 MHz; Type: D835V2; Serial: 4d047**

Communication System: CW; Frequency: 835 MHz;Duty Cycle: 1:1
Medium: 835 Head Medium parameters used:
f = 835 MHz; $\sigma$ = 0.859 mho/m; $\varepsilon_r$ = 40.4; $\rho$ = 1000 kg/m$^3$
Phantom section: Flat Section; Space: 1.5 cm

Test Date: 07-25-2011; Ambient Temp: 23.6 °C; Tissue Temp: 21.8 °C

Probe: ES3DV3 - SN3258; ConvF(6.18, 6.18, 6.18); Calibrated: 4/8/2011
Sensor-Surface: 4mm (Mechanical Surface Detection)
Electronics: DAE4 Sn649; Calibrated: 2/21/2011
Phantom: SAM Sub; Type: SAM 4.0; Serial: TP-1403
Measurement SW: DASY4, V4.7 Build 80; Postprocessing SW: SEMCAD, V1.8 Build 186

## 835MHz System Verification

**Area Scan (7x13x1):** Measurement grid: dx=15mm, dy=15mm
**Zoom Scan (5x5x7)/Cube 0:** Measurement grid: dx=8mm, dy=8mm, dz=5mm
Input Power = 18.0 dBm (63 mW)
**SAR(1 g) = 0.609 mW/g; SAR(10 g) = 0.395 mW/g**
Deviation = 1.43 %

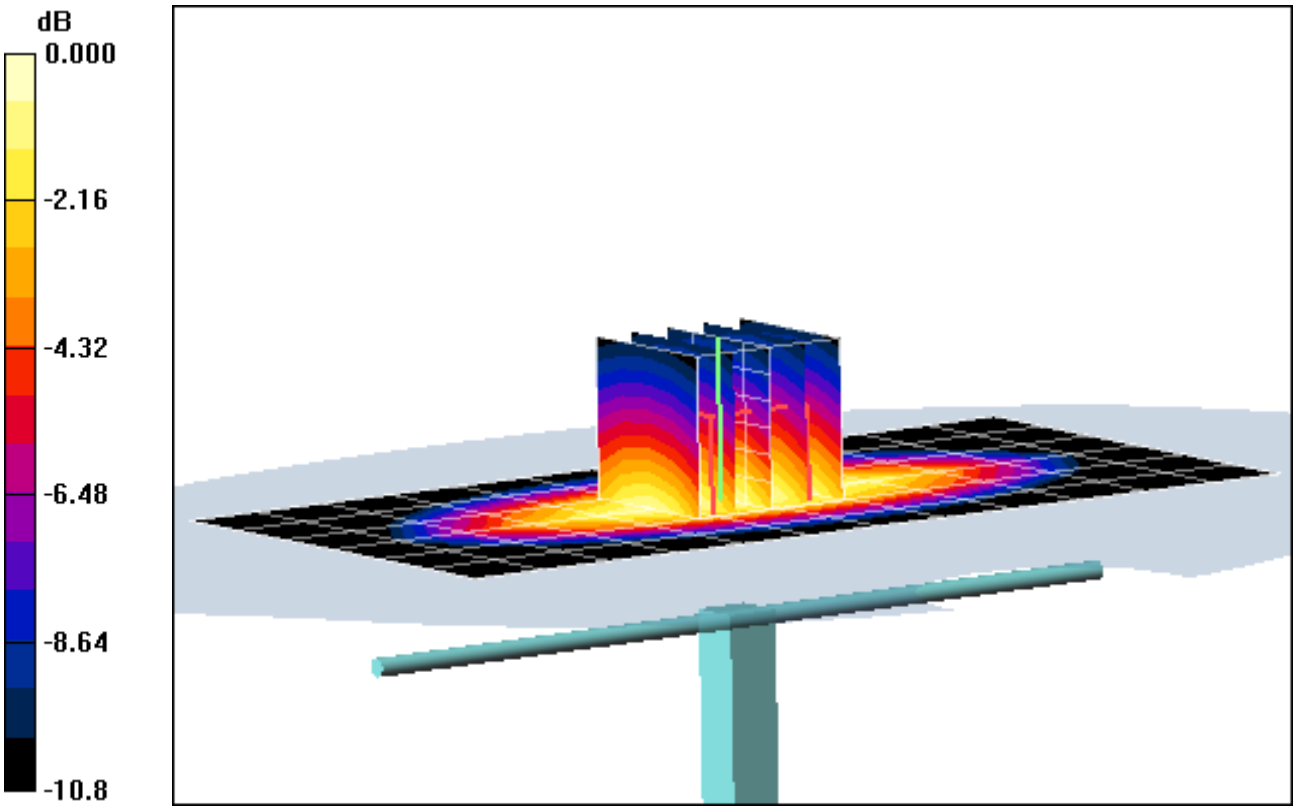


0 dB = 0.656mW/g

# PCTEST ENGINEERING LABORATORY, INC.

**DUT: Dipole 835 MHz; Type: D835V2; Serial: 4d047**

Communication System: CW; Frequency: 835 MHz;Duty Cycle: 1:1
Medium: 835 Body Medium parameters used:
f = 835 MHz; $\sigma$ = 0.986 mho/m; $\varepsilon_r$ = 54.9; $\rho$ = 1000 kg/m$^3$
Phantom section: Flat Section; Space: 1.5 cm

Test Date: 07-25-2011; Ambient Temp: 24.0 °C; Tissue Temp: 22.2 °C

Probe: ES3DV3 - SN3258; ConvF(6.12, 6.12, 6.12); Calibrated: 4/8/2011
Sensor-Surface: 4mm (Mechanical Surface Detection)
Electronics: DAE4 Sn649; Calibrated: 2/21/2011
Phantom: SAM Main; Type: SAM 4.0; Serial: TP-1106
Measurement SW: DASY4, V4.7 Build 80; Postprocessing SW: SEMCAD, V1.8 Build 186

## 835MHz System Verification

**Area Scan (7x13x1):** Measurement grid: dx=15mm, dy=15mm
**Zoom Scan (5x5x7)/Cube 0:** Measurement grid: dx=8mm, dy=8mm, dz=5mm
Input Power = 18.0 dBm (63 mW)
**SAR(1 g) = 0.649 mW/g; SAR(10 g) = 0.423 mW/g**
Deviation = 4.58 %

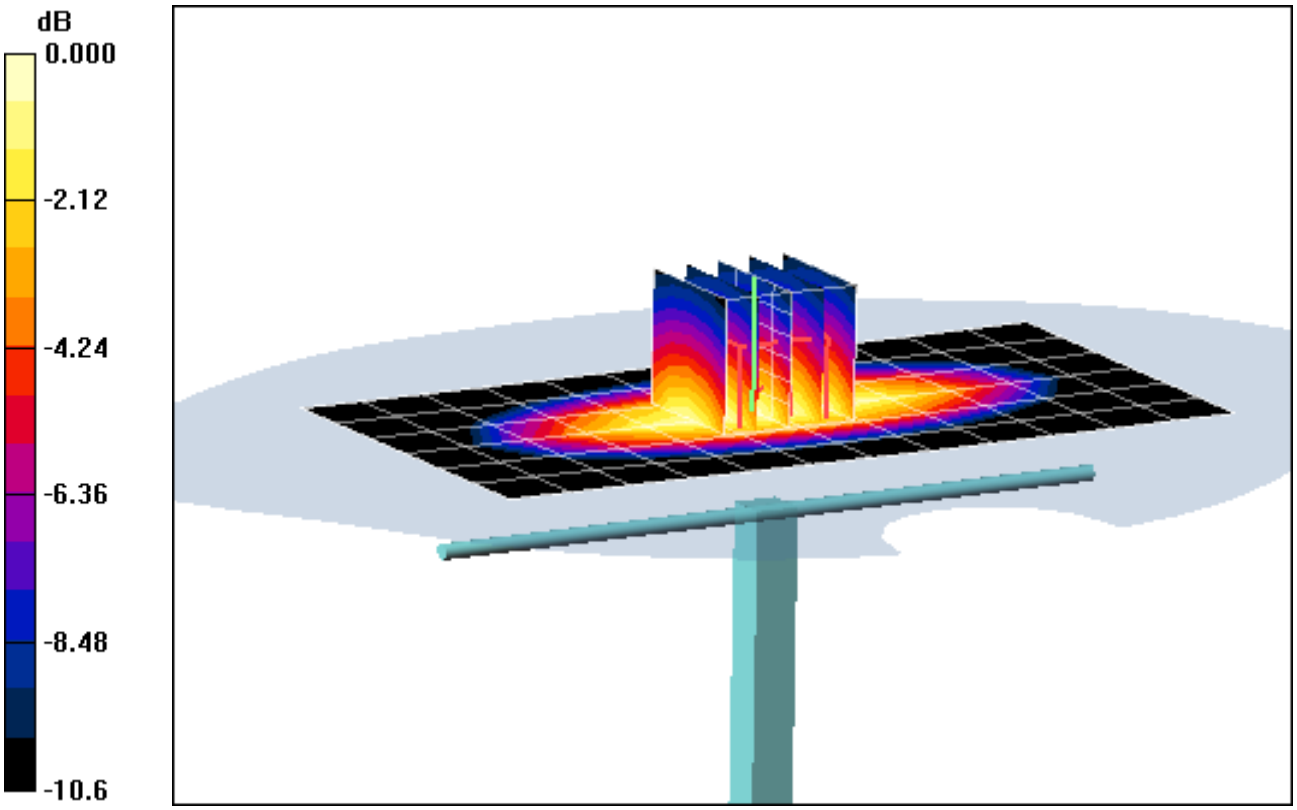


0 dB = 0.701mW/g

# PCTEST ENGINEERING LABORATORY, INC.

**DUT: SAR Dipole 1900 MHz; Type: D1900V2; Serial: 502**

Communication System: CW; Frequency: 1900 MHz;Duty Cycle: 1:1
Medium: 1900 Head Medium parameters used (interpolated):
f = 1900 MHz; $\sigma$ = 1.45 mho/m; $\varepsilon_r$ = 41.4; $\rho$ = 1000 kg/m$^3$
Phantom section: Flat Section; Space: 1.0 cm

Test Date: 07-26-2011; Ambient Temp: 23.8°C; Tissue Temp: 21.9°C

Probe: ES3DV2 - SN3022; ConvF(4.83, 4.83, 4.83); Calibrated: 9/21/2010
Sensor-Surface: 4mm (Mechanical Surface Detection)
Electronics: DAE4 Sn704; Calibrated: 3/17/2011
Phantom: SAM Sub Dasy B; Type: SAM 4.0; Serial: TP-1626
Measurement SW: DASY4, V4.7 Build 80; Postprocessing SW: SEMCAD, V1.8 Build 186

## 1900MHz System Verification

**Area Scan (5x7x1):** Measurement grid: dx=15mm, dy=15mm
**Zoom Scan (5x5x7)/Cube 0:** Measurement grid: dx=8mm, dy=8mm, dz=5mm
Input Power = 20 dBm (100 mW)
**SAR(1 g) = 4.16 mW/g; SAR(10 g) = 2.21 mW/g**
Deviation = 3.48 %

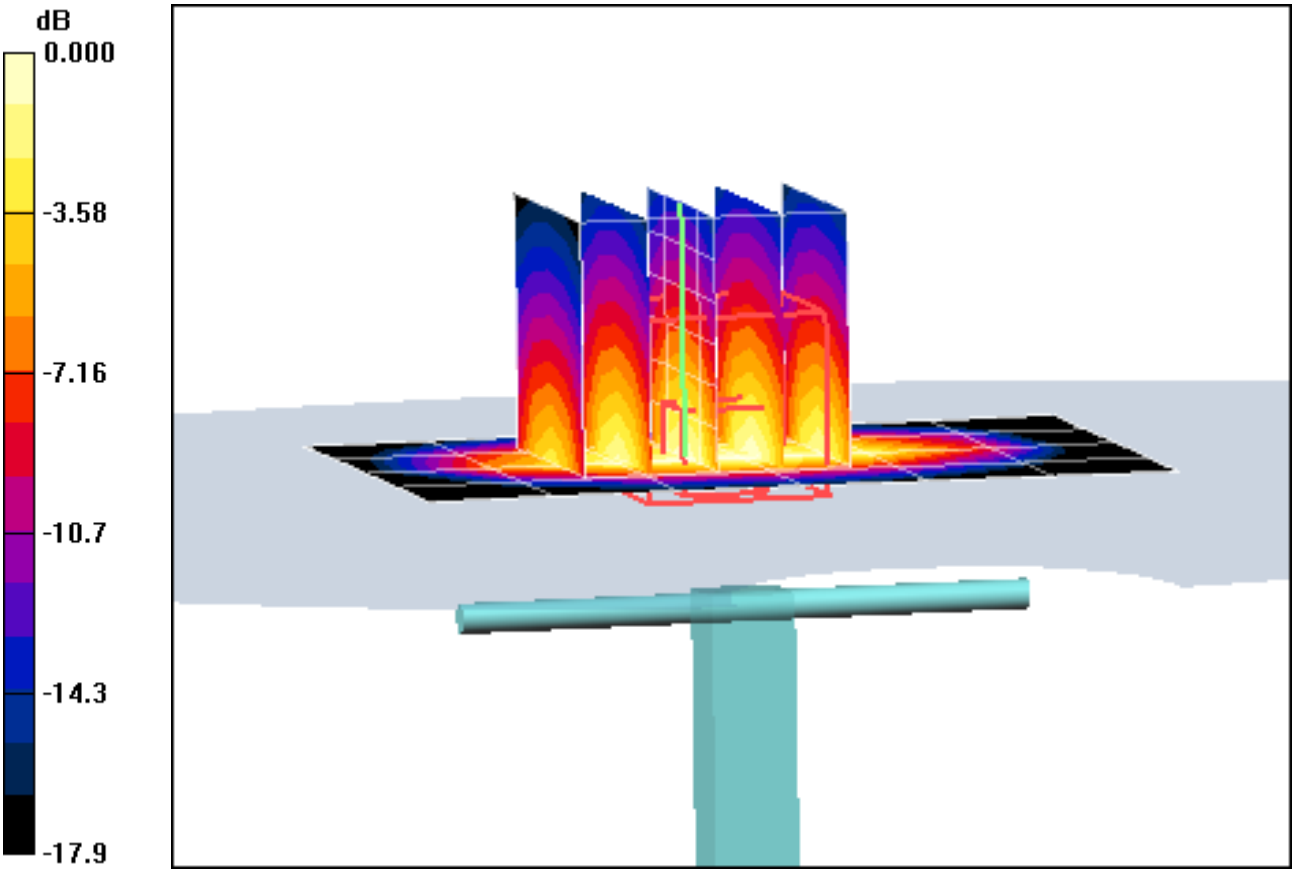


0 dB = 4.63mW/g

# PCTEST ENGINEERING LABORATORY, INC.

**DUT: SAR Dipole 1900 MHz; Type: D1900V2; Serial: 502**

Communication System: CW; Frequency: 1900 MHz;Duty Cycle: 1:1
Medium: 1900 Body Medium parameters used (interpolated):
f = 1900 MHz; $\sigma$ = 1.52 mho/m; $\varepsilon_r$ = 53.2; $\rho$ = 1000 kg/m$^3$
Phantom section: Flat Section; Space: 1.0 cm

Test Date: 07-25-2011; Ambient Temp: 23.7°C; Tissue Temp: 21.8°C

Probe: ES3DV2 - SN3022; ConvF(4.34, 4.34, 4.34); Calibrated: 9/21/2010
Sensor-Surface: 4mm (Mechanical Surface Detection)
Electronics: DAE4 Sn704; Calibrated: 3/17/2011
Phantom: SAM with CRP; Type: SAM; Serial: TP1375
Measurement SW: DASY4, V4.7 Build 80; Postprocessing SW: SEMCAD, V1.8 Build 186

## 1900MHz System Verification

**Area Scan (5x7x1):** Measurement grid: dx=15mm, dy=15mm
**Zoom Scan (5x5x7)/Cube 0:** Measurement grid: dx=8mm, dy=8mm, dz=5mm
Input Power = 20 dBm (100 mW)
**SAR(1 g) = 4.04 mW/g; SAR(10 g) = 2.16 mW/g**
Deviation = -1.70 %

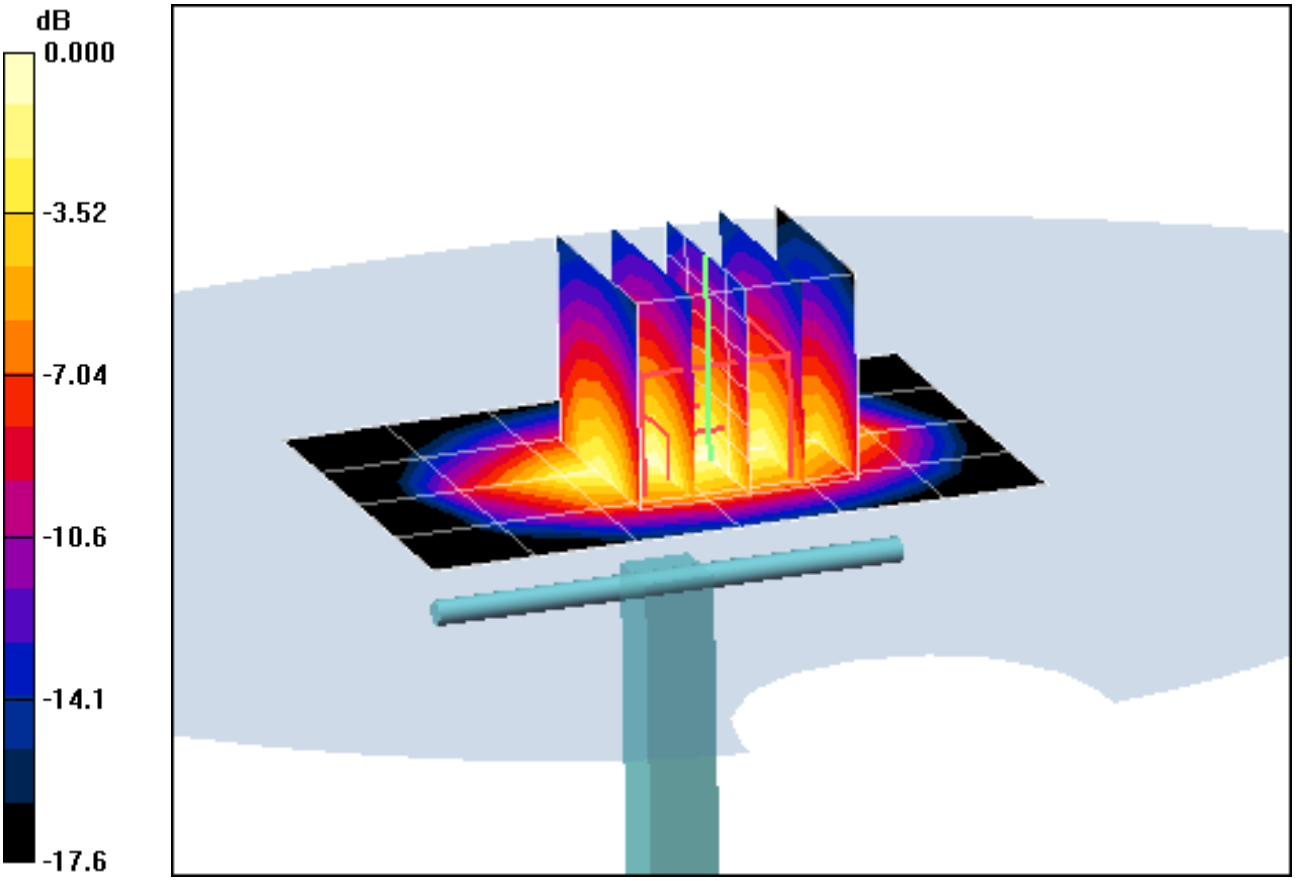


0 dB = 4.52mW/g

# PCTEST ENGINEERING LABORATORY, INC.

**DUT: SAR Dipole 2450 MHz; Type: D2450V2; Serial: 797**

Communication System: CW; Frequency: 2450 MHz;Duty Cycle: 1:1
Medium: 2450 Head Medium parameters used:
f = 2450 MHz; $\sigma$ = 1.78 mho/m; $\varepsilon_r$ = 38.9; $\rho$ = 1000 kg/m$^3$
Phantom section: Flat Section; Space: 1.0 cm

Test Date: 07-26-2011; Ambient Temp: 23.6°C; Tissue Temp: 23.5°C

Probe: ES3DV3 - SN3258; ConvF(4.5, 4.5, 4.5); Calibrated: 4/8/2011
Sensor-Surface: 3mm (Mechanical Surface Detection)
Electronics: DAE4 Sn649; Calibrated: 2/21/2011
Phantom: SAM Sub; Type: SAM 4.0; Serial: TP-1357
Measurement SW: DASY4, V4.7 Build 80; Postprocessing SW: SEMCAD, V1.8 Build 186

## 2450MHz System Verification

**Area Scan (5x7x1):** Measurement grid: dx=15mm, dy=15mm
**Zoom Scan (5x5x7)/Cube 0:** Measurement grid: dx=8mm, dy=8mm, dz=5mm
Input Power = 14 dBm (25 mW)
**SAR(1 g) = 1.29 mW/g; SAR(10 g) = 0.590 mW/g**
Deviation = -3.19 %

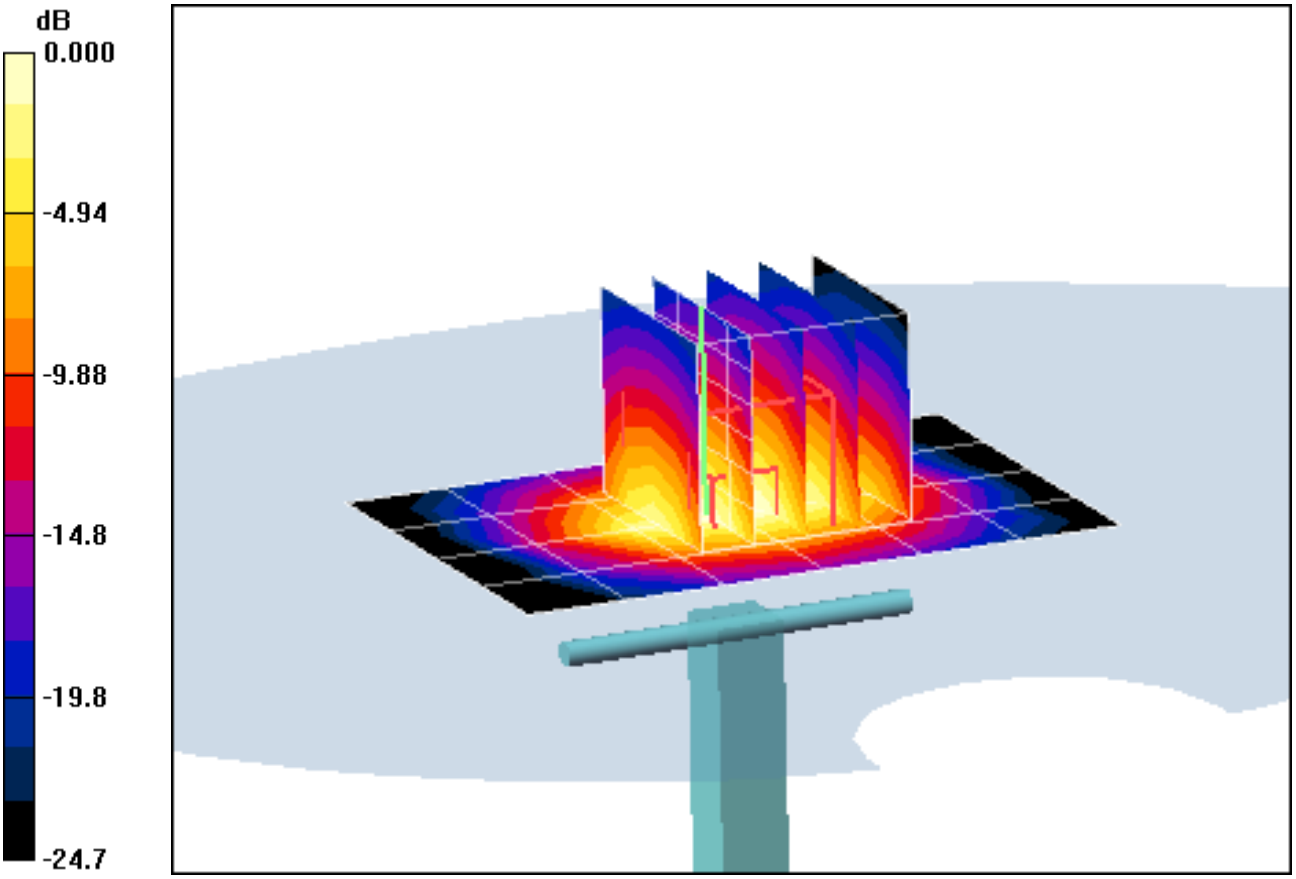


0 dB = 1.66mW/g

# PCTEST ENGINEERING LABORATORY, INC.

**DUT: SAR Dipole 2450 MHz; Type: D2450V2; Serial: 797**

Communication System: CW; Frequency: 2450 MHz;Duty Cycle: 1:1
Medium: 2450 Body Medium parameters used:
f = 2450 MHz; $\sigma$ = 1.93 mho/m; $\varepsilon_r$ = 52.1; $\rho$ = 1000 kg/m$^3$
Phantom section: Flat Section; Space: 1.0 cm

Test Date: 07-26-2011; Ambient Temp: 23.2°C; Tissue Temp: 21.7°C

Probe: ES3DV3 - SN3258; ConvF(4.34, 4.34, 4.34); Calibrated: 4/8/2011
Sensor-Surface: 3mm (Mechanical Surface Detection)
Electronics: DAE4 Sn649; Calibrated: 2/21/2011
Phantom: SAM Main; Type: SAM 4.0; Serial: TP-1406
Measurement SW: DASY4, V4.7 Build 80; Postprocessing SW: SEMCAD, V1.8 Build 186

## 2450MHz System Verification

**Area Scan (5x7x1):** Measurement grid: dx=15mm, dy=15mm
**Zoom Scan (5x5x7)/Cube 0:** Measurement grid: dx=8mm, dy=8mm, dz=5mm
Input Power = 14 dBm (25 mW)
**SAR(1 g) = 1.3 mW/g; SAR(10 g) = 0.604 mW/g**
Deviation = -0.57 %

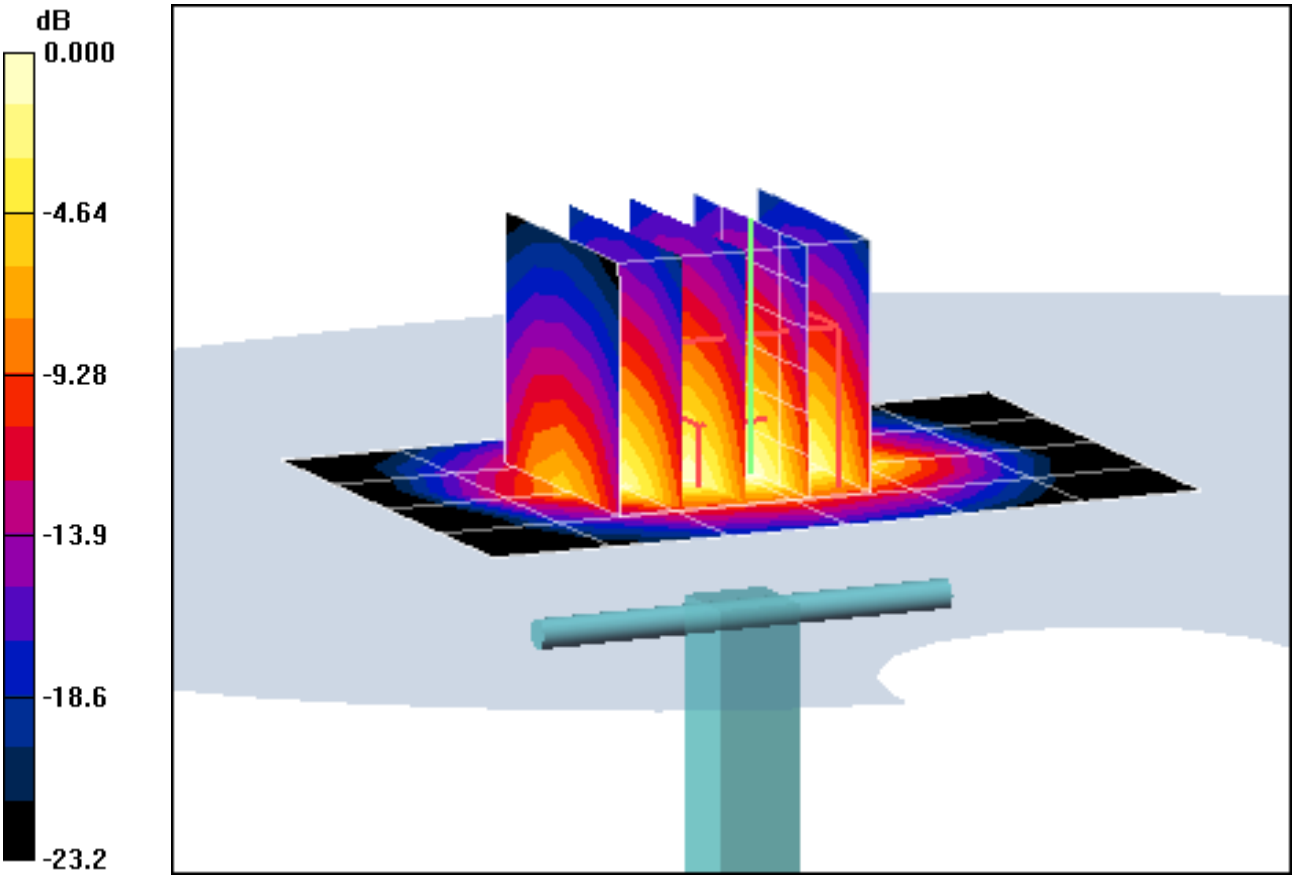


0 dB = 1.65mW/g

# PCTEST ENGINEERING LABORATORY, INC.

**DUT: Dipole 5200 MHz; Type: D5GHzV2; Serial: 1057**

Communication System: CW; Frequency: 5200 MHz;Duty Cycle: 1:1
Medium: 5 GHz Head Medium parameters used (interpolated):
f = 5200 MHz; $\sigma$ = 4.8 mho/m; $\varepsilon_r$ = 35.3; $\rho$ = 1000 kg/m$^3$
Phantom section: Flat Section; Space: 1.0 cm

Test Date: 07-27-2011; Ambient Temp: 22.3 °C; Tissue Temp: 20.4 °C

Probe: EX3DV4 - SN3550; ConvF(4.06, 4.06, 4.06); Calibrated: 2/14/2011
Sensor-Surface: 2mm (Mechanical Surface Detection)
Electronics: DAE4 Sn665; Calibrated: 4/20/2011
Phantom: SAM Main; Type: SAM 4.0; Serial: TP-1114
Measurement SW: DASY4, V4.7 Build 80; Postprocessing SW: SEMCAD, V1.8 Build 186

## 5200MHz System Verification

**Area Scan (7x9x1):** Measurement grid: dx=10mm, dy=10mm
**Zoom Scan (7x7x11)/Cube 0:** Measurement grid: dx=4mm, dy=4mm, dz=2mm
Input Power = 14.0 dBm (25 mW)
**SAR(1 g) = 2.24 mW/g; SAR(10 g) = 0.631 mW/g**
Deviation = 7.82 %

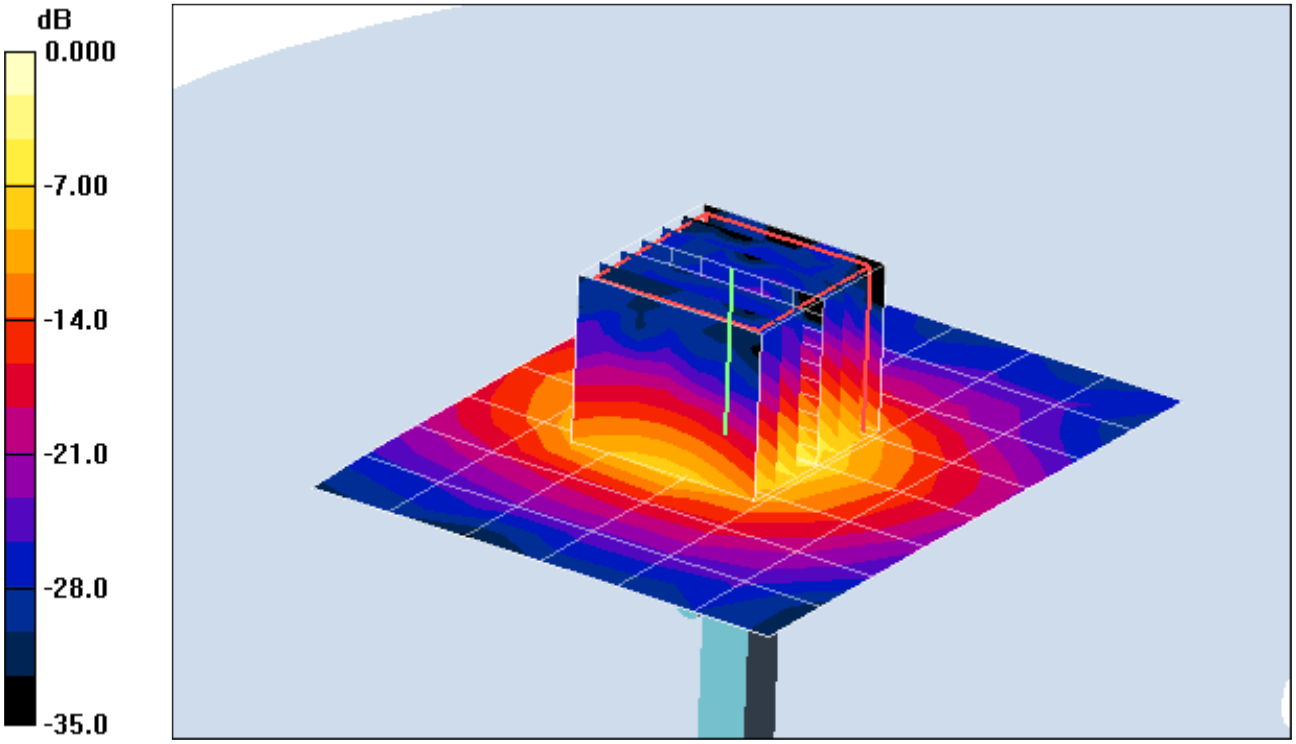


0 dB = 4.68mW/g

# PCTEST ENGINEERING LABORATORY, INC.

**DUT: Dipole 5200 MHz; Type: D5GHzV2; Serial: 1057**

Communication System: CW; Frequency: 5200 MHz;Duty Cycle: 1:1
Medium: 5 GHz Body; Medium parameters used (interpolated):
f = 5200 MHz; $\sigma$ = 5.31 mho/m; $\varepsilon_r$ = 47.88; $\rho$ = 1000 kg/m$^3$
Phantom section: Flat Section; Space: 1.0 cm

Test Date: 07-28-2011; Ambient Temp: 22.2 °C; Tissue Temp: 20.5°C

Probe: EX3DV4 - SN3550; ConvF(3.58, 3.58, 3.58); Calibrated: 2/14/2011
Sensor-Surface: 2mm (Mechanical Surface Detection)
Electronics: DAE4 Sn665; Calibrated: 4/20/2011
Phantom: SAM Sub; Type: SAM 4.0; Serial: TP-1357
Measurement SW: DASY4, V4.7 Build 80; Postprocessing SW: SEMCAD, V1.8 Build 186

## 5200MHz System Verification

**Area Scan (7x9x1):** Measurement grid: dx=10mm, dy=10mm
**Zoom Scan (7x7x11)/Cube 0:** Measurement grid: dx=4mm, dy=4mm, dz=2mm
Input Power = 20.0 dBm (100 mW)
**SAR(1 g) = 8.11 mW/g; SAR(10 g) = 2.23 mW/g**
Deviation = 4.38 %

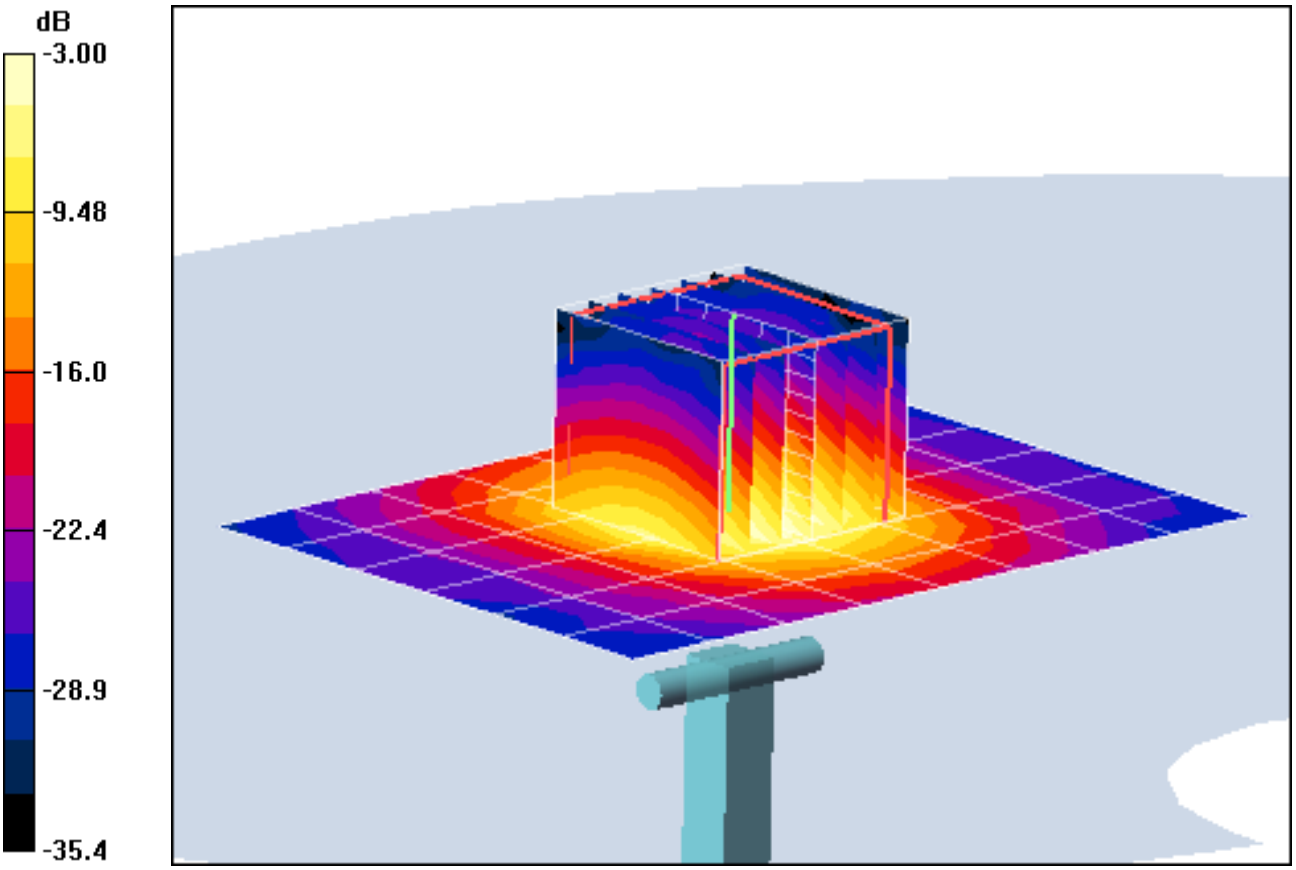


0 dB = 16.5mW/g

# PCTEST ENGINEERING LABORATORY, INC.

**DUT: Dipole 5500 MHz; Type: D5GHzV2; Serial: 1057**

Communication System: CW; Frequency: 5500 MHz;Duty Cycle: 1:1
Medium: 5 GHz Head; Medium parameters used (interpolated):
f = 5500 MHz; $\sigma$ = 5.15 mho/m; $\varepsilon_r$ = 34.8; $\rho$ = 1000 kg/m$^3$
Phantom section: Flat Section; Space: 1.0 cm

Test Date: 07-27-2011; Ambient Temp: 22.3 °C; Tissue Temp: 20.4 °C

Probe: EX3DV4 - SN3550; ConvF(3.77, 3.77, 3.77); Calibrated: 2/14/2011
Sensor-Surface: 2mm (Mechanical Surface Detection)
Electronics: DAE4 Sn665; Calibrated: 4/20/2011
Phantom: SAM Main; Type: SAM 4.0; Serial: TP-1114
Measurement SW: DASY4, V4.7 Build 80; Postprocessing SW: SEMCAD, V1.8 Build 186

## 5500MHz System Verification

**Area Scan (7x9x1):** Measurement grid: dx=10mm, dy=10mm
**Zoom Scan (7x7x11)/Cube 0:** Measurement grid: dx=4mm, dy=4mm, dz=2mm
Input Power = 20.0 dBm (100 mW)
**SAR(1 g) = 9.76 mW/g; SAR(10 g) = 2.74 mW/g**
Deviation = 8.32 %

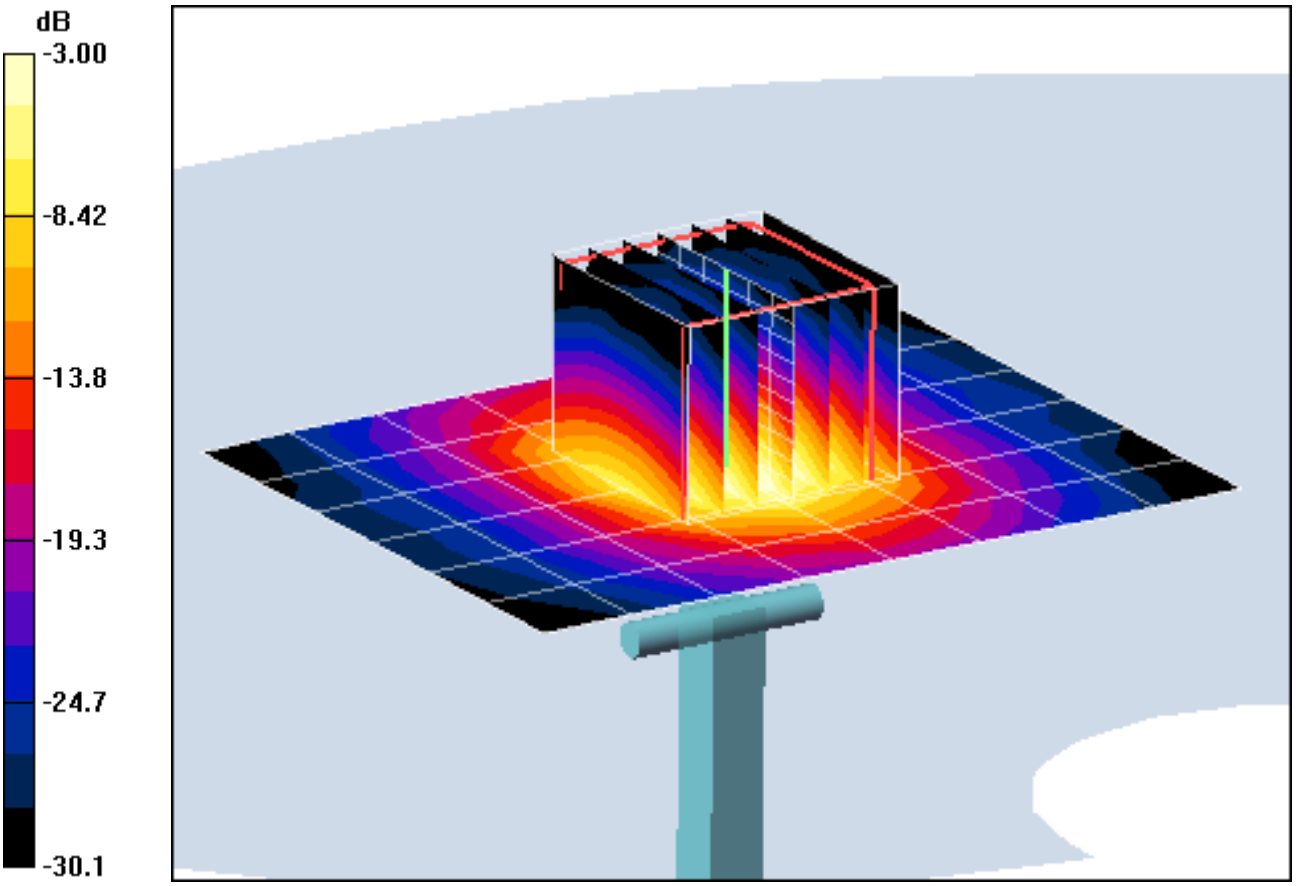


0 dB = 20.4mW/g

# PCTEST ENGINEERING LABORATORY, INC.

**DUT: Dipole 5500 MHz; Type: D5GHzV2; Serial: 1057**

Communication System: CW; Frequency: 5500 MHz;Duty Cycle: 1:1
Medium: 5 GHz Body; Medium parameters used (interpolated):
f = 5500 MHz; $\sigma$ = 5.72 mho/m; $\varepsilon_r$ = 47.3; $\rho$ = 1000 kg/m$^3$
Phantom section: Flat Section; Space: 1.0 cm

Test Date: 07-28-2011; Ambient Temp: 22.3 °C; Tissue Temp: 20.7 °C

Probe: EX3DV4 - SN3550; ConvF(3.21, 3.21, 3.21); Calibrated: 2/14/2011
Sensor-Surface: 2mm (Mechanical Surface Detection)
Electronics: DAE4 Sn665; Calibrated: 4/20/2011
Phantom: SAM Sub; Type: SAM 4.0; Serial: TP-1357
Measurement SW: DASY4, V4.7 Build 80; Postprocessing SW: SEMCAD, V1.8 Build 186

## 5500MHz System Verification

**Area Scan (7x9x1):** Measurement grid: dx=10mm, dy=10mm
**Zoom Scan (7x7x11)/Cube 0:** Measurement grid: dx=4mm, dy=4mm, dz=2mm
Input Power = 20.0 dBm (100 mW)
**SAR(1 g) = 7.9 mW/g; SAR(10 g) = 2.16 mW/g**
Deviation = -6.40 %

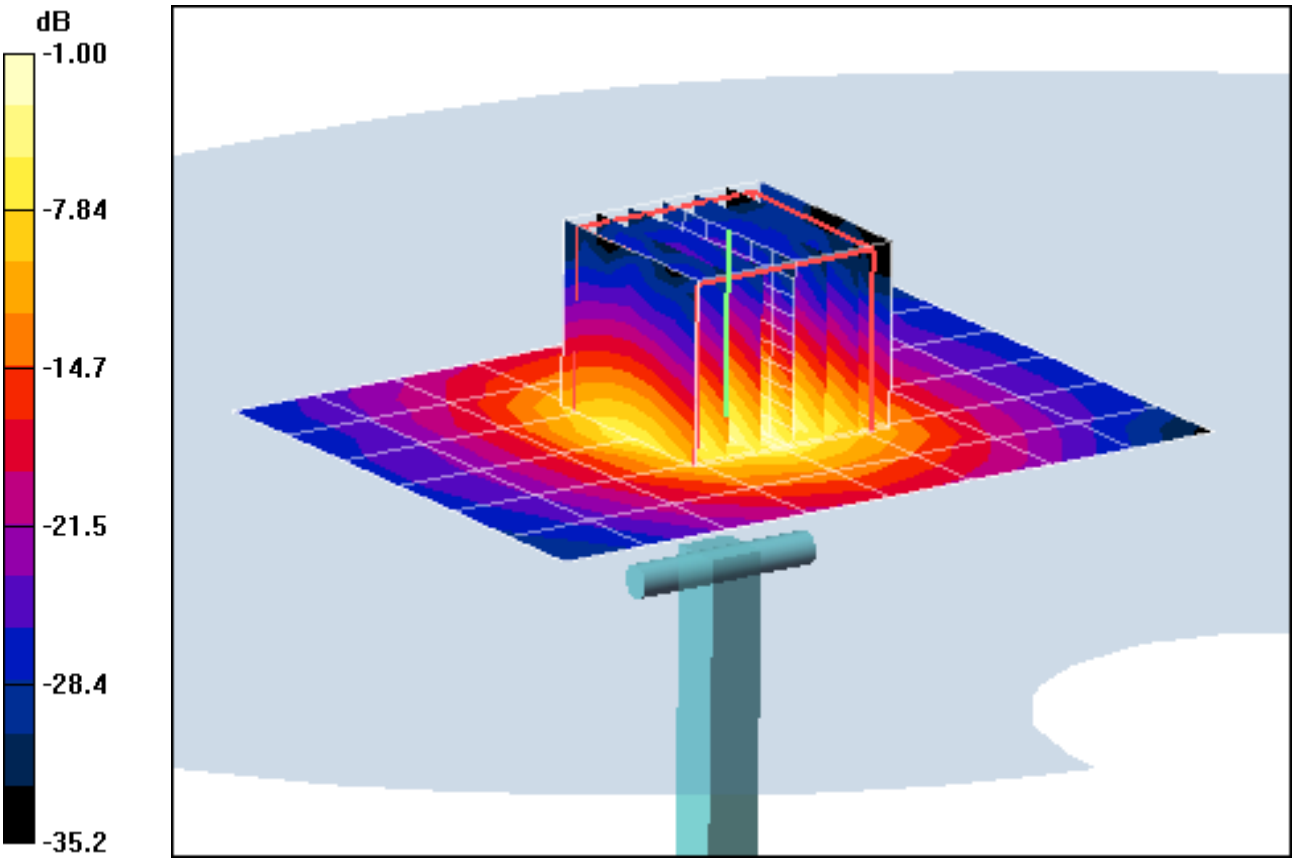


0 dB = 16.2mW/g

# PCTEST ENGINEERING LABORATORY, INC.

**DUT: Dipole 5800 MHz; Type: D5GHzV2; Serial: 1057**

Communication System: CW; Frequency: 5800 MHz;Duty Cycle: 1:1
Medium: 5 GHz Head; Medium parameters used (interpolated):
f = 5800 MHz; $\sigma$ = 5.51 mho/m; $\varepsilon_r$ = 34.2; $\rho$ = 1000 kg/m$^3$
Phantom section: Flat Section; Space: 1.0 cm

Test Date: 07-27-2011; Ambient Temp: 22.6 °C; Tissue Temp: 20.8 °C

Probe: EX3DV4 - SN3550; ConvF(3.64, 3.64, 3.64); Calibrated: 2/14/2011
Sensor-Surface: 2mm (Mechanical Surface Detection)
Electronics: DAE4 Sn665; Calibrated: 4/20/2011
Phantom: SAM Main; Type: SAM 4.0; Serial: TP-1114
Measurement SW: DASY4, V4.7 Build 80; Postprocessing SW: SEMCAD, V1.8 Build 186

## 5800MHz System Verification

**Area Scan (7x9x1):** Measurement grid: dx=10mm, dy=10mm
**Zoom Scan (7x7x11)/Cube 0:** Measurement grid: dx=4mm, dy=4mm, dz=2mm
Input Power = 20.0 dBm (100 mW)
**SAR(1 g) = 9.04 mW/g; SAR(10 g) = 2.51 mW/g**
Deviation = 9.05 %

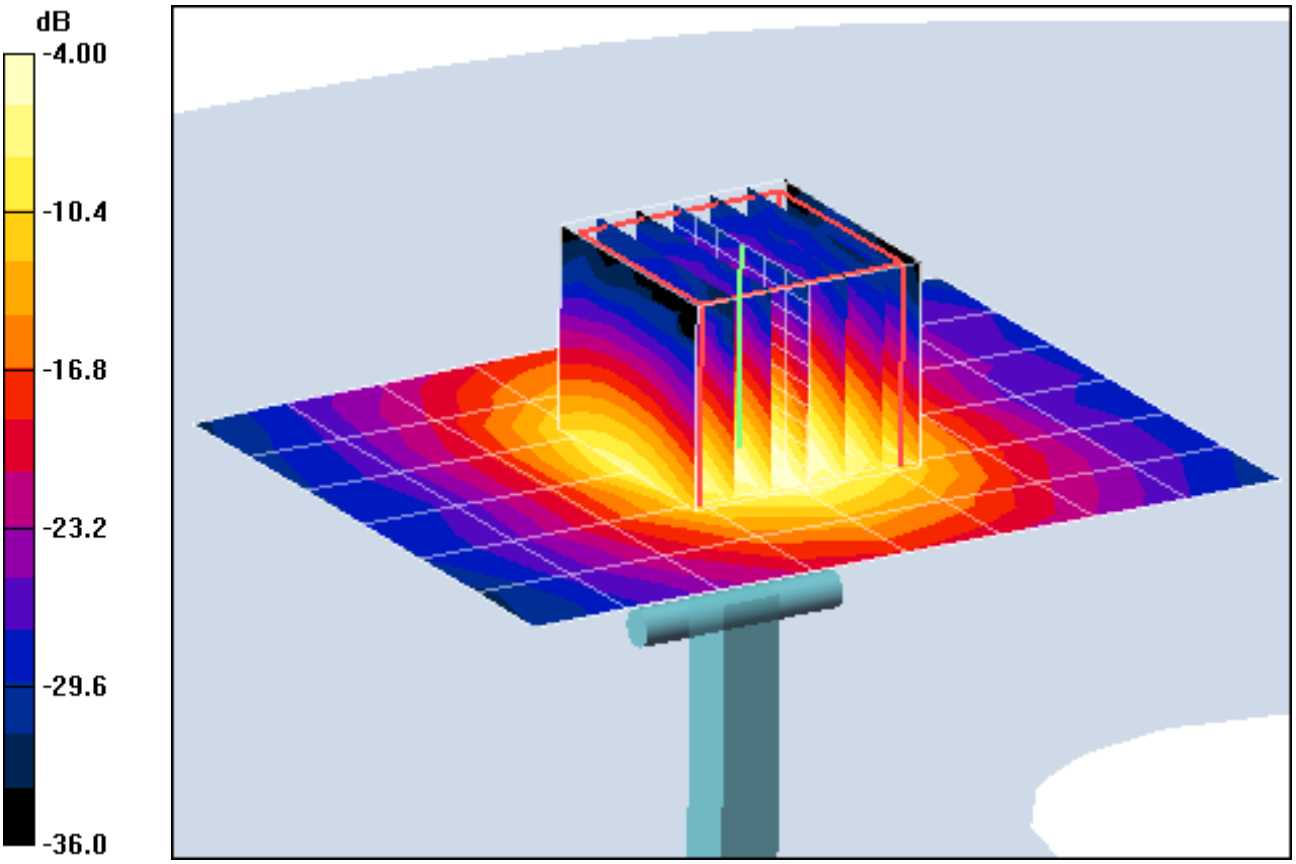


0 dB = 19.4mW/g

# PCTEST ENGINEERING LABORATORY, INC.

**DUT: Dipole 5800 MHz; Type: D5GHzV2; Serial: 1057**

Communication System: CW; Frequency: 5800 MHz;Duty Cycle: 1:1
Medium: 5 GHz Body; Medium parameters used (interpolated):
f = 5800 MHz; $\sigma$ = 6.15 mho/m; $\varepsilon_r$ = 46.9; $\rho$ = 1000 kg/m$^3$
Phantom section: Flat Section; Space: 1.0 cm

Test Date: 07-28-2011; Ambient Temp: 22.7 °C; Tissue Temp: 20.9 °C

Probe: EX3DV4 - SN3550; ConvF(3.29, 3.29, 3.29); Calibrated: 2/14/2011
Sensor-Surface: 2mm (Mechanical Surface Detection)
Electronics: DAE4 Sn665; Calibrated: 4/20/2011
Phantom: SAM Sub; Type: SAM 4.0; Serial: TP-1357
Measurement SW: DASY4, V4.7 Build 80; Postprocessing SW: SEMCAD, V1.8 Build 186

## 5800MHz System Verification

**Area Scan (7x9x1):** Measurement grid: dx=10mm, dy=10mm
**Zoom Scan (7x7x11)/Cube 0:** Measurement grid: dx=4mm, dy=4mm, dz=2mm
Input Power = 20.0 dBm (100 mW)
**SAR(1 g) = 7.72 mW/g; SAR(10 g) = 2.1 mW/g**
Deviation = 2.93 %

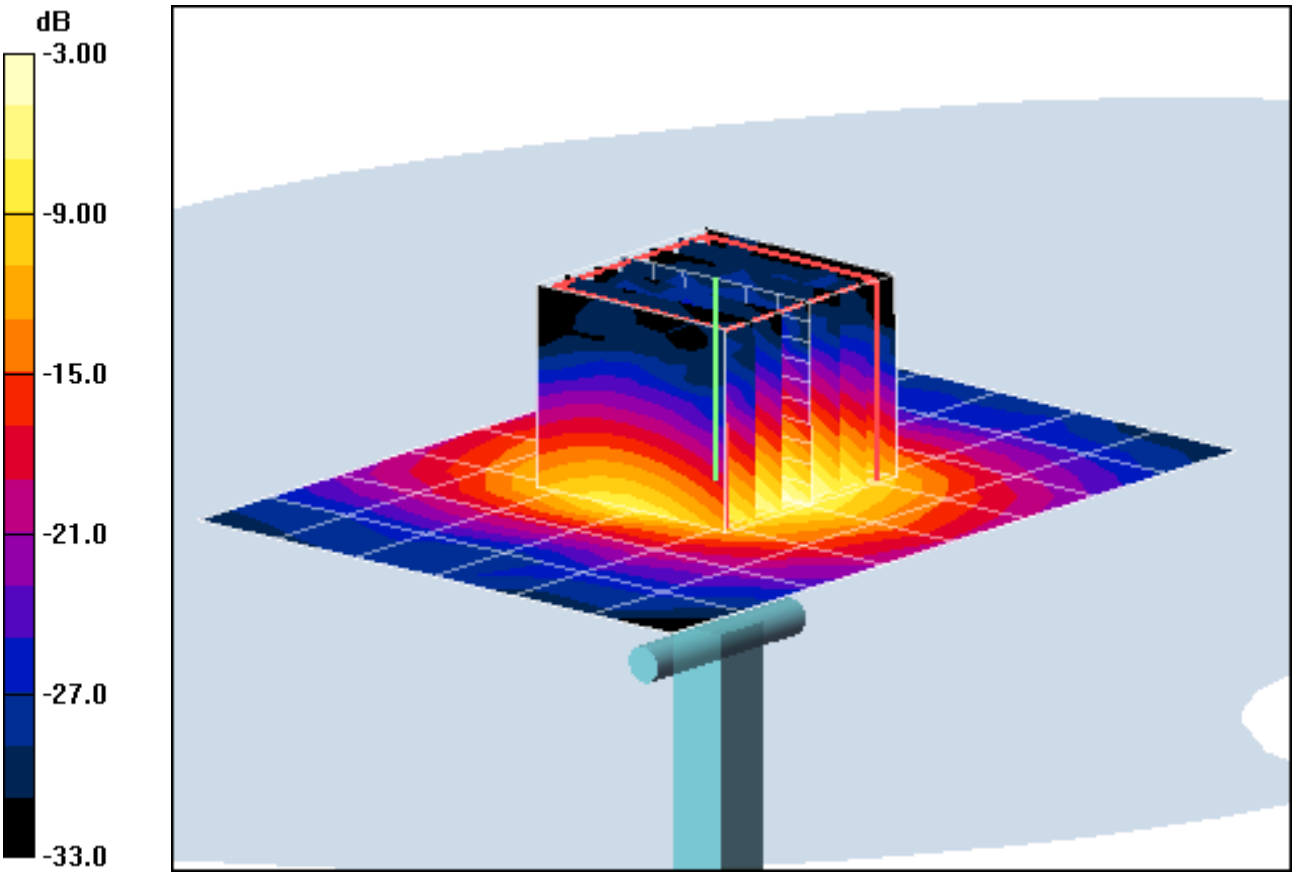


0 dB = 16.4mW/g