FCC CFR47 PART 22 SUBPART H
FCC CFR47 PART 24 SUBPART E

CERTIFICATION TEST REPORT

FOR

GSM/WCDMA Phone + Bluetooth, DTS/UNII a/b/g/n, ANT+ and NFC

MODEL NUMBER: GT-I9158V

FCC ID: A3LGTI9158V

REPORT NUMBER: 14U17788-1

ISSUE DATE: June 4, 2014

Prepared for

SAMSUNG ELECTRONICS CO., LTD.
416, MAETAN 3-DONG, YEONGTONG-GU
SUWON-CITY, GYEONGGI-DO 443-742, SOUTH KOREA

Prepared by

UL VERIFICATION SERVICES INC.
47173 BENICIA STREET
FREMONT, CA 94538, U.S.A.
TEL: (510) 771-1000
FAX: (510) 661-0888

NVLAP LAB CODE 200065-0

Revision History

Rev.	Issue Date	Revisions	Revised By
--	6/4/14	Initial Issue	P. Zhang

UL VERIFICATION SERVICES INC. FORM NO: CCSUP4701I
47173 BENICIA STREET, FREMONT, CA 94538, USA TEL: (510) 771-1000 FAX: (510) 661-0888

This report shall not be reproduced except in full, without the written approval of UL Verification Services Inc.

TABLE OF CONTENTS

1. ATTESTATION OF TEST RESULTS 5
2. TEST METHODOLOGY 7
3. FACILITIES AND ACCREDITATION 7
4. CALIBRATION AND UNCERTAINTY 7
4.1. MEASURING INSTRUMENT CALIBRATION 7
4.2. SAMPLE CALCULATION 7
4.3. MEASUREMENT UNCERTAINTY 8
5. EQUIPMENT UNDER TEST 9
5.1. DESCRIPTION OF EUT 9
5.2. MAXIMUM OUTPUT POWER 9
5.3. DESCRIPTION OF AVAILABLE ANTENNAS 10
5.4. DESCRIPTION OF TEST SETUP 11
6. TEST AND MEASUREMENT EQUIPMENT 14
7. Summary Table 15
8. RF POWER OUTPUT VERIFICATION 16
8.1. GSM/GPRS/EDGE 16
8.1.1. GSM OUTPUT POWER RESULT 17
8.2. UMTS REL 99 18
8.2.1. UMTS REL 99 OUTPUT POWER RESULT 18
8.3. UMTS HSDPA 19
8.3.1. UMTS HSDPA OUTPUT POWER RESULT 19
8.3.2. UMTS HSUPA 21
8.3.3. UMTS HSUPA OUTPUT POWER RESULT 22
8.3.4. DC-HSDPA 23
8.3.1. UMTS DC-HSDPA OUTPUT POWER RESULT 25
9. PEAK TO AVERAGE RATIO 27
9.1. CONDUCTED PEAK TO AVERAGE RESULT 27
10. LIMITS AND CONDUCTED RESULTS 29
10.1. OCCUPIED BANDWIDTH 29
10.1.1. OCCUPIED BANDWIDTH RESULTS 30

UL VERIFICATION SERVICES INC. FORM NO: CCSUP4701I
47173 BENICIA STREET, FREMONT, CA 94538, USA TEL: (510) 771-1000 FAX: (510) 661-0888

This report shall not be reproduced except in full, without the written approval of UL Verification Services Inc.

10.1.2. OCCUPIED BANDWIDTH PLOTS 31
10.2. BAND EDGE EMISSIONS 33
10.2.1. BAND EDGE PLOTS 34
10.3. OUT OF BAND EMISSIONS 38
10.3.1. OUT OF BAND EMISSIONS RESULT 39
10.3.2. OUT OF BAND EMISSIONS PLOTS.....40
10.4. FREQUENCY STABILITY 42
10.4.1. FREQUENCY STABILITY RESULTS.....43
11. RADIATED TEST RESULTS 45
11.1. RADIATED POWER (ERP & EIRP).....45
11.1.1. ERP/EIRP Results.....45
11.1.2. ERP/EIRP DATA.....47
11.2. FIELD STRENGTH OF SPURIOUS RADIATION.....55
11.2.1. SPURIOUS RADIATION DATA.....56
12. SETUP PHOTOS 64

UL VERIFICATION SERVICES INC. FORM NO: CCSUP4701I
47173 BENICIA STREET, FREMONT, CA 94538, USA TEL: (510) 771-1000 FAX: (510) 661-0888

This report shall not be reproduced except in full, without the written approval of UL Verification Services Inc.

1. ATTESTATION OF TEST RESULTS

COMPANY NAME:	SAMSUNG ELECTRONICS CO., LTD.
	416, MAETAN 3-DONG, YEONGTONG-GU
	SUWON-CITY, GYEONGGI-DO 443-742, SOUTH KOREA
EUT DESCRIPTION:	GSM/WCDMA Phone + Bluetooth, DTS/UNII a/b/g/n & ANT+
MODEL:	GT-I9158V
SERIAL NUMBER:	FL-189-D (Conducted); FL-189-B (Radiated)
DATE TESTED:	MAY 14 – JUNE 4, 2014

APPLICABLE STANDARDS

STANDARD	TEST RESULTS
FCC PART 22H, 24E	PASS

UL Verification Services Inc. tested the above equipment in accordance with the requirements set forth in the above standards. All indications of Pass/Fail in this report are opinions expressed by UL Verification Services Inc. based on interpretations and/or observations of test results. Measurement Uncertainties were not taken into account and are published for informational purposes only. The test results show that the equipment tested is capable of demonstrating compliance with the requirements as documented in this report.

Note: The results documented in this report apply only to the tested sample, under the conditions and modes of operation as described herein. This document may not be altered or revised in any way unless done so by UL Verification Services Inc. and all revisions are duly noted in the revisions section. Any alteration of this document not carried out by UL Verification Services Inc. will constitute fraud and shall nullify the document. This report must not be used by the client to claim product certification, approval, or endorsement by NVLAP, NIST, any agency of the Federal Government, or any agency of any government.

UL VERIFICATION SERVICES INC. FORM NO: CCSUP4701I
47173 BENICIA STREET, FREMONT, CA 94538, USA TEL: (510) 771-1000 FAX: (510) 661-0888

This report shall not be reproduced except in full, without the written approval of UL Verification Services Inc.

Approved & Released For

UL Verification Services Inc. By:

Tested By:

PENG ZHANG

CONSUMER TECHNOLOGY DIVISION
PROJECT LEAD
UL Verification Services Inc.

CHARLES VERGONIO

CONSUMER TECHNOLOGY DIVISION
LAB ENGINEER
UL Verification Services Inc.

UL VERIFICATION SERVICES INC. FORM NO: CCSUP4701I
47173 BENICIA STREET, FREMONT, CA 94538, USA TEL: (510) 771-1000 FAX: (510) 661-0888

This report shall not be reproduced except in full, without the written approval of UL Verification Services Inc.

2. TEST METHODOLOGY

The tests documented in this report were performed in accordance with TIA-603-C, FCC CFR 47 Part 22, FCC CFR Part 24.

3. FACILITIES AND ACCREDITATION

The test sites and measurement facilities used to collect data are located at 47173 and 47266 Benicia Street, Fremont, California, USA. Line conducted emissions are measured only at the 47173 address. The following table identifies which facilities were utilized for radiated emission measurements documented in this report. Specific facilities are also identified in the test results sections.

47173 Benicia Street	47266 Benicia Street
☐ Chamber A	☐ Chamber D
☒ Chamber B	☒ Chamber E
☐ Chamber C	☐ Chamber F

UL Verification Services Inc. is accredited by NVLAP, Laboratory Code 200065-0. The full scope of accreditation can be viewed at http://ts.nist.gov/standards/scopes/2000650.htm.

4. CALIBRATION AND UNCERTAINTY

4.1. MEASURING INSTRUMENT CALIBRATION

The measuring equipment utilized to perform the tests documented in this report has been calibrated in accordance with the manufacturer's recommendations, and is traceable to recognized national standards

4.2. SAMPLE CALCULATION

Where relevant, the following sample calculation is provided:

EIRP = PSA reading with EUT worst orientation (dBm) + Path loss (dB) – cable loss(between the SG and substitution antenna) + Substitution Antenna Factor (dBi)

ERP = PSA reading with EUT worst orientation (dBm) + Path loss (dB) – cable loss(between the SG and substitution antenna)

(Path loss = Signal generator output – PSA reading with substitution antenna)

UL VERIFICATION SERVICES INC. FORM NO: CCSUP4701I
47173 BENICIA STREET, FREMONT, CA 94538, USA TEL: (510) 771-1000 FAX: (510) 661-0888

This report shall not be reproduced except in full, without the written approval of UL Verification Services Inc.

4.3. MEASUREMENT UNCERTAINTY

Where relevant, the following measurement uncertainty levels have been estimated for tests performed on the apparatus:

PARAMETER	UNCERTAINTY
Conducted Disturbance, 0.15 to 30 MHz	3.52 dB
Radiated Disturbance, 30 to 18000 MHz	4.94 dB

Uncertainty figures are valid to a confidence level of 95%.

UL VERIFICATION SERVICES INC. FORM NO: CCSUP4701I
47173 BENICIA STREET, FREMONT, CA 94538, USA TEL: (510) 771-1000 FAX: (510) 661-0888

This report shall not be reproduced except in full, without the written approval of UL Verification Services Inc.

5. EQUIPMENT UNDER TEST

5.1. DESCRIPTION OF EUT

The EUT is a GSM/WCDMA Phone + Bluetooth, DTS/UNII a/b/g/n & ANT+

5.2. MAXIMUM OUTPUT POWER

The transmitter has a maximum peak conducted and radiated ERP / EIRP output powers as follows:

FCC Part 22/2 4						
Band	Frequency Range(MHz)	Modulation Peak	Conducted		Radiated	
			Peak(dBm)	Peak (mW)	Peak (dBm)	Peak (mW)
GSM850	824~849	GMSK	33.2	2089.30		
	824~849	GPRS	33.2	2089.30	25.952	393.73
	824~849	EGPRS	27.4	549.54	24.543	284.64
GSM1900	1850~1910	GMSK	28.8	758.58		
	1850~1910	GPRS	28.8	758.58	30.65	1161.45
	1850~1910	EGPRS	25.4	346.74	28.02	633.87

FCC Part 22/2 4						
Band	Frequency Range(MHz)	Modulation Peak	Conducted		Radiated	
			Avg (dBm)	Avg (mW)	Avg (dBm)	Avg (mW)
Band 5	824~849	REL99	23.2	208.93	17.50	56.23
	824~849	HSDPA	22.4	173.78	16.5	44.67
	824~849	HSUPA	22.0	158.49		
Band 2	1850~1910	REL99	21.8	151.36	23.15	206.54
	1850~1910	HSDPA	20.5	112.20	22.55	179.89
	1850~1910	HSUPA	20.5	112.20		

UL VERIFICATION SERVICES INC. FORM NO: CCSUP4701I
47173 BENICIA STREET, FREMONT, CA 94538, USA TEL: (510) 771-1000 FAX: (510) 661-0888

This report shall not be reproduced except in full, without the written approval of UL Verification Services Inc.

5.3. DESCRIPTION OF AVAILABLE ANTENNAS

The radio utilizes a PIFA antenna for the [List the bands supported] with a maximum peak gain as follow:

Frequency (MHz)	Peak Gain (dBi)
Band 5, 824~849MHz	-5.76
Band 2, 1850~1910MHz	-3.24

UL VERIFICATION SERVICES INC. FORM NO: CCSUP4701I
47173 BENICIA STREET, FREMONT, CA 94538, USA TEL: (510) 771-1000 FAX: (510) 661-0888

This report shall not be reproduced except in full, without the written approval of UL Verification Services Inc.

5.4. DESCRIPTION OF TEST SETUP

SUPPORT EQUIPMENT

Support Equipment List				
Description	Manufacturer	Model	Serial Number	FCC ID
AC Adapter	Samsung	ETA-U90CBC	N/A	N/A
Earphone	Samsung	GH-59	N/A	N/A

I/O CABLES (CONDUCTED SETUP)

I/O Cable List						
Cable No	Port	# of identical ports	Connector Type	Cable Type	Cable Length (m)	Remarks
1	RF Out	1	Spectrum Analyzer	Shielded	None	NA
2	Antenna Port	1	EUT	Shielded	0.1m	NA
3	RF In/Out	1	Communication Test Set	Shielded	1m	NA

I/O CABLES (RADIATED SETUP)

I/O CABLE LIST						
Cable No.	Port	# of Identical Ports	Connector Type	Cable Type	Cable Length	Remarks
1	USB	1	AC Adapter	Un-shielded	1.2m	No
2	Jack	1	Headset	Shielded	1m	No
3	RF In/out	1	Communication Test Set	Un-shielded	2m	Yes

TEST SETUP

The EUT is continuously communicated to the call box during the tests.

UL VERIFICATION SERVICES INC. FORM NO: CCSUP4701I
47173 BENICIA STREET, FREMONT, CA 94538, USA TEL: (510) 771-1000 FAX: (510) 661-0888

This report shall not be reproduced except in full, without the written approval of UL Verification Services Inc.

SETUP DIAGRAM FOR TESTS (CONDUCTED TEST SETUP)

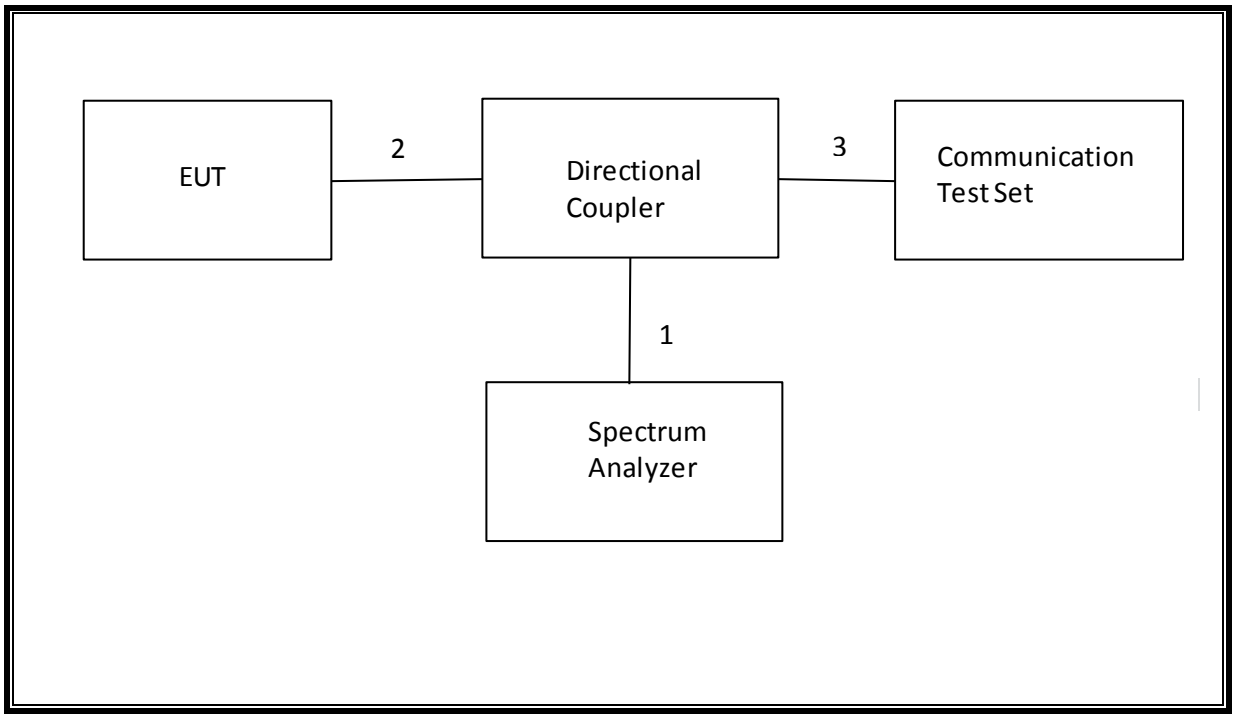

UL VERIFICATION SERVICES INC. FORM NO: CCSUP4701I
47173 BENICIA STREET, FREMONT, CA 94538, USA TEL: (510) 771-1000 FAX: (510) 661-0888

This report shall not be reproduced except in full, without the written approval of UL Verification Services Inc.

SETUP DIAGRAM FOR TESTS (RADIATED TEST SETUP)

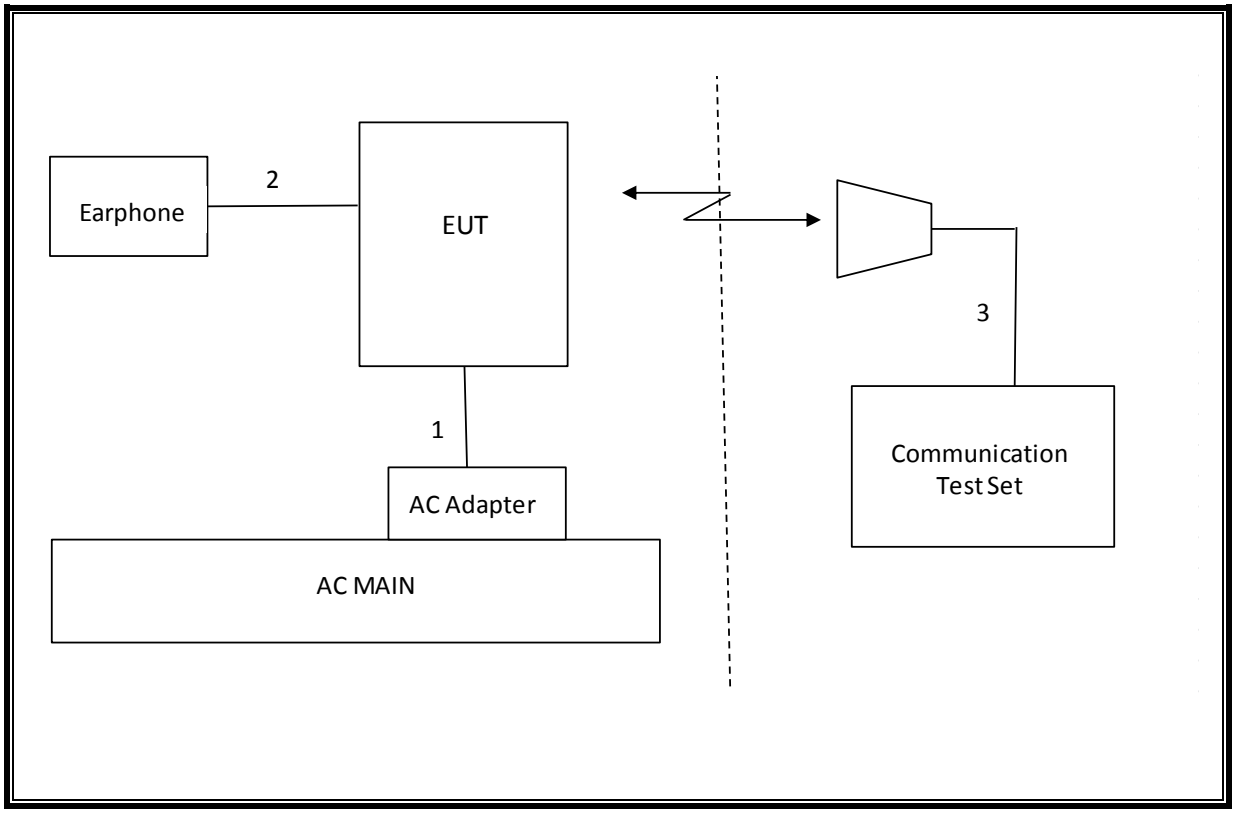

UL VERIFICATION SERVICES INC. FORM NO: CCSUP4701I
47173 BENICIA STREET, FREMONT, CA 94538, USA TEL: (510) 771-1000 FAX: (510) 661-0888

This report shall not be reproduced except in full, without the written approval of UL Verification Services Inc.

6. TEST AND MEASUREMENT EQUIPMENT

The following test and measurement equipment was utilized for the tests documented in this report:

TEST EQUIPMENT LIST				
Description	**Manufacturer**	**Model**	**Asset**	**Cal Due**
Spectrum Analyzer, 44 GHz	Agilent / HP	E4446A	C01179	02/26/15
Antenna, Bilog, 2 GHz	Sunol Sciences	JB1	C01011	08/14/14
Antenna, Horn, 18 GHz	EMCO	3115	C00783	10/25/14
Antenna, Horn, 18 GHz	EMCO	3115	C00784	09/25/14
Highpass Filter, 2.7 GHz	Micro-Tronics	HPM13194	N02687	CNR
Highpass Filter, 1.5 GHz	Micro-Tronics	HPM13193	N02688	CNR
Temperature / Humidity Chamber	Thermotron	SE 600-10-10	C00930	01/09/15
Communications Test Set	R&S	CMW500	T159	07/02/14
DC power supply, 8 V @ 3 A or 15 V	Agilent / HP	E3610A	None	CNR
Vector signal generator, 6 GHz	Agilent / HP	E4438C	None	07/06/14
Antenna, Tuned Dipole 400~1000	ETS	3121C DB4	C00993	02/14/15
Directional Coupler	RF-Lambda	RFDC5M06G15	None	CNR

UL VERIFICATION SERVICES INC. FORM NO: CCSUP4701I
47173 BENICIA STREET, FREMONT, CA 94538, USA TEL: (510) 771-1000 FAX: (510) 661-0888

This report shall not be reproduced except in full, without the written approval of UL Verification Services Inc.

7. Summary Table

FCC Part Section	RSS Section(s)	Test Description	Test Limit	Test Condition	Test Result	Worst Case
2.1049	RSS Gen	Occupied Band width (99%)	N/A	Conducted	Pass	4171KHz
22.917(a) 24.238(a) 27.53(g)	RSS-132(4.5.1) RSS-133(6.5.1) RSS-139(6.5.1)	Band Edge / Conducted Spurious Emission	-13dBm		Pass	-16.608dBm
2.1046	N/A	Conducted output power	N/A		Pass	33.2dBm
22.355 24.235 27.54	RSS-132(4.3) RSS-133(6.3) RSS-139(6.3)	Frequency Stability	2.5PPM		Pass	0.012PPM
22.913(a)(2)	RSS-132(4.4)	Effective Radiated Power	38 dBm	Radiated	Pass	25.952dBm
24.232(c)	RSS-133(6.4)	Equivalent Isotropic Radiated Power	33dBm		Pass	30.65dBm
22.917(a) 24.238(a) 27.53(g)	RSS-132(4.5.1) RSS-133(6.5.1) RSS-139(6.5.1)	Radiated Spurious Emission	-13dBm		Pass	-37.7dBm

UL VERIFICATION SERVICES INC. FORM NO: CCSUP4701I
47173 BENICIA STREET, FREMONT, CA 94538, USA TEL: (510) 771-1000 FAX: (510) 661-0888

This report shall not be reproduced except in full, without the written approval of UL Verification Services Inc.

8. RF POWER OUTPUT VERIFICATION

8.1. GSM/GPRS/EDGE

Function: Menu select > GSM Mobile Station > GSM 850/900/1800/1900

Press Connection control to choose the different menus

Press RESET > choose all to reset all settings

Connection Press Signal Off to turn off the signal and change settings

Network Support > GSM+GPRS or GSM+EGPRS

Main Service > Packet Data

Service selection > Test Mode A – Auto Slot Config. off

MS Signal Press Slot Config bottom on the right twice to select and change the number of time slots and power setting

> Slot configuration > Uplink/Gamma

> 33 dBm for GPRS 850/900

> 30 dBm for GPRS1800/1900

BS Signal Enter the same channel number for TCH channel (test channel) and BCCH channel

Frequency Offset > + 0 Hz

Mode > BCCH and TCH

BCCH Level > -85 dBm (May need to adjust if link is not stable)

BCCH Channel > choose desire test channel [Enter the same channel number for TCH channel (test channel) and BCCH channel]

Channel Type > Off

P0> 4 dB

Slot Config > Unchanged (if already set under MS Signal)

TCH > choose desired test channel

Hopping > Off

Main Timeslot > 3 (Default)

Network Coding Scheme > CS4 (GPRS) and MCS5 ~ MCS9 (EGPRS)

Bit Stream > 2E9-1PSR Bit Pattern

AF/RF Enter appropriate offsets for Ext. Att. Output and Ext. Att. Input

Connection Press Signal On to turn on the signal and change settings

UL VERIFICATION SERVICES INC. FORM NO: CCSUP4701I
47173 BENICIA STREET, FREMONT, CA 94538, USA TEL: (510) 771-1000 FAX: (510) 661-0888

This report shall not be reproduced except in full, without the written approval of UL Verification Services Inc.

8.1.1. GSM OUTPUT POWER RESULT

Band	Mode	Ch.	f(MHz)	1 time slot	2 time slot	3 time slot	4 time slot
				Peak (dBm)	Peak (dBm)	Peak (dBm)	Peak (dBm)
GSM850	GMSK	128	824.2	33.2			
		190	836.6	33.1			
		251	848.8	33.0			
	GPRS	128	824.2	33.2	31.3	29.0	27.0
		190	836.6	33.1	31.3	29.1	27.1
		251	848.8	33.0	31.3	29.0	27.2
	EGPRS	128	824.2	27.4	25.8	23.7	21.6
		190	836.6	26.9	25.3	23.3	21.3
		251	848.8	26.5	25.1	23.0	21.0
GSM1900	GMSK	512	1850.2	28.8			
		661	1880	28.6			
		810	1909.8	28.3			
	GPRS	512	1850.2	28.8	28.1	27.0	26.0
		661	1880	28.6	27.9	26.8	25.7
		810	1909.8	28.3	27.6	26.6	25.4
	EGPRS	512	1850.2	25.4	23.7	21.6	19.6
		661	1880	25.1	23.4	21.4	19.4
		810	1909.8	24.8	23.1	21.1	19.1

UL VERIFICATION SERVICES INC. FORM NO: CCSUP4701I
47173 BENICIA STREET, FREMONT, CA 94538, USA TEL: (510) 771-1000 FAX: (510) 661-0888

This report shall not be reproduced except in full, without the written approval of UL Verification Services Inc.

8.2. UMTS REL 99

TEST PROCEDURE

The following summary of these settings are illustrated below:

	Mode	Rel99
	Subtest	-
WCDMA General Settings	Loopback Mode	Test Mode 1
	Rel99 RMC	12.2kbps RMC
	HSDPA FRC	Not Applicable
	HSUPA Test	Not Applicable
	Power Control Algorithm	Algorithm2
	βc	Not Applicable
	βd	Not Applicable
	βec	Not Applicable
	βc/βd	8/15
	βhs	Not Applicable
	βed	Not Applicable

8.2.1. UMTS REL 99 OUTPUT POWER RESULT

Band	Mode	Ch.	f(MHz)	Conducted Power (dBm) Avg (dBm)
Band 5	REL99	4132	826.4	23.2
		4183	836.6	23.1
		4233	846.6	23.0
Band 2	REL99	9262	1852.4	21.8
		9400	1880	21.6
		9538	1907.6	21.7

UL VERIFICATION SERVICES INC. FORM NO: CCSUP4701I
47173 BENICIA STREET, FREMONT, CA 94538, USA TEL: (510) 771-1000 FAX: (510) 661-0888

This report shall not be reproduced except in full, without the written approval of UL Verification Services Inc.

8.3. UMTS HSDPA

The following 4 Sub-tests were completed according to Release 5 procedures in section 5.2 of 3GPP TS34.121. A summary of these settings are illustrated below:

	Mode	Rel5 HSDPA			
	Subtest	1	2	3	4
WCDMA General Settings	Loopback Mode	Test Mode 1			
	Rel99 RMC	12.2kbps RMC			
	HSDPA FRC	H-Set1			
	Power Control Algorithm	Algorithm 2			
	βc	2/15	12/15	15/15	15/15
	βd	15/15	15/15	8/15	4/15
	Bd (SF)	64			
	βc/βd	2/15	12/15	15/8	15/4
	βhs	4/15	24/15	30/15	30/15
	MPR (dB)	0	0	0.5	0.5
HSDPA Specific Settings	D_{ACK}	8			
	D_{NAK}	8			
	DCQI	8			
	Ack-Nack repetition factor	3			
	CQI Feedback (Table 5.2B.4)	4ms			
	CQI Repetition Factor (Table 5.2B.4)	2			
	Ahs =βhs/βc	30/15			

8.3.1. UMTS HSDPA OUTPUT POWER RESULT

Band	Mode	Subset	Ch.	f(MHz)	Conducted Power (dBm) Avg (dBm)
Band 5	HSDPA	1	4132	826.4	22.3
			4183	836.6	22.1
			4233	846.6	22.1
		2	4132	826.4	22.4
			4183	836.6	22.2
			4233	846.6	22.0
		3	4132	826.4	21.8
			4183	836.6	21.6
			4233	846.6	21.6
		4	4132	826.4	21.8
			4183	836.6	21.6
			4233	846.6	21.5
Band 2	HSDPA	1	9262	1852.4	20.5

UL VERIFICATION SERVICES INC. FORM NO: CCSUP4701I
47173 BENICIA STREET, FREMONT, CA 94538, USA TEL: (510) 771-1000 FAX: (510) 661-0888

This report shall not be reproduced except in full, without the written approval of UL Verification Services Inc.

			9400	1880	20.4
			9538	1907.6	20.1
		2	9262	1852.4	20.3
			9400	1880	20.4
			9538	1907.6	19.6
		3	9262	1852.4	20.1
			9400	1880	19.9
			9538	1907.6	19.6
		4	9262	1852.4	20.2
			9400	1880	19.9
			9538	1907.6	19.5

UL VERIFICATION SERVICES INC. FORM NO: CCSUP4701I
47173 BENICIA STREET, FREMONT, CA 94538, USA TEL: (510) 771-1000 FAX: (510) 661-0888

This report shall not be reproduced except in full, without the written approval of UL Verification Services Inc.

8.3.2. UMTS HSUPA

TEST PROCEDURE

The following summary of these settings are illustrated below: (ETSI TS 134.121-1 Table C.11.1)

	Mode	Rel6 HSUPA	Rel6 HSUPA	Rel6 HSUPA	Rel6 HSUPA	Rel6 HSUPA
	Subtest	1	2	3	4	5
WCDMA General Settings	Loopback Mode	Test Mode 1				
	P-CPICH (dB)	-10				
	P-CCPCH (dB)	-12				
	SCH (dB)	-12				
	PICH(dB)	-15				
	DPCH (dB)	-9				
	HS-SCCH_1 (dB)	-8				
	HS-PDSCH (dB)	-3				
	Rel99 RMC	12.2kbps RMC				
	HSDPA FRC	H-Set1				
	HSUPA Test	HSUPA Loopback				
	Power Control Algorithm	Algorithm2				
	Bc	11/15	6/15	15/15	2/15	15/15
	Bd	15/15	15/15	9/15	15/15	15/15
	Bec	209/225	12/15	30/15	2/15	5/15
	βc/βd	11/15	6/15	15/9	2/15	15/15
	Bhs	22/15	12/15	30/15	4/15	30/15
	βed (note1)	1309/225	94/75	47/15 47/15	56/75	134/15
	MPR	0	2	1	2	0
HSDPA Specific Settings	DACK	8				
	DNAK	8				
	DCQI	8				
	Ack-Nack repetition factor	3				
	CQI Feedback (Table 5.2B.4)	4ms				
	CQI Repetition Factor (Table 5.2B.4)	2				
	Ahs = βhs/βc	30/15				
HSUPA Specific Settings	D E-DPCCH	6	8	8	5	7
	DHARQ	0	0	0	0	0
	AG Index	20	12	15	17	21
	Reference E-TFCIs	5	5	2	5	5
	ETFCI (from 34.121 Table C.11.1.3)	75	67	92	71	81
	Associated Max UL Data Rate kbps	242.1	174.9	482.8	205.8	308.9
	Reference E_TFCIs	E-TFCI 11 E-TFCI PO 4 E-TFCI 67 E-TFCI PO 18 E-TFCI 71 E-TFCI PO 23 E-TFCI 75 E-TFCI PO 26 E-TFCI 81 E-TFCI PO 27		E-TFCI 11 E-TFCI PO 4 E-TFCI 92 E-TFCI PO 18	E-TFCI 11 E-TFCI PO 4 E-TFCI 67 E-TFCI PO 18 E-TFCI 71 E-TFCI PO 23 E-TFCI 75 E-TFCI PO 26 E-TFCI 81 E-TFCI PO 27	

Note1: βed cannot be set directly, it is set by Absolute Grant Value.

UL VERIFICATION SERVICES INC. FORM NO: CCSUP4701I
47173 BENICIA STREET, FREMONT, CA 94538, USA TEL: (510) 771-1000 FAX: (510) 661-0888

This report shall not be reproduced except in full, without the written approval of UL Verification Services Inc.

8.3.3. UMTS HSUPA OUTPUT POWER RESULT

Band	Mode	Subset	Ch.	f(MHz)	Conducted Power (dBm) Avg (dBm)
Band 5	HSUPA	1	4132	826.4	22.0
			4183	836.6	21.7
			4233	846.6	21.8
		2	4132	826.4	21.0
			4183	836.6	21.1
			4233	846.6	21.0
		3	4132	826.4	21.0
			4183	836.6	21.0
			4233	846.6	21.0
		4	4132	826.4	21.4
			4183	836.6	21.7
			4233	846.6	21.5
		5	4132	826.4	22.0
			4183	836.6	22.0
			4233	846.6	22.0
Band 2	HSUPA	1	9262	1852.4	20.0
			9400	1880	20.2
			9538	1907.6	20.1
		2	9262	1852.4	19.0
			9400	1880	19.0
			9538	1907.6	18.6
		3	9262	1852.4	19.7
			9400	1880	19.1
			9538	1907.6	19.0
		4	9262	1852.4	19.0
			9400	1880	19.0
			9538	1907.6	19.0
		5	9262	1852.4	20.5
			9400	1880	20.4
			9538	1907.6	20.0

UL VERIFICATION SERVICES INC. FORM NO: CCSUP4701I
47173 BENICIA STREET, FREMONT, CA 94538, USA TEL: (510) 771-1000 FAX: (510) 661-0888

This report shall not be reproduced except in full, without the written approval of UL Verification Services Inc.

8.3.4. DC-HSDPA

The following tests were completed according to procedures in section 7.3.13 of 3GPP TS34.108 v9.5.0. A summary of these settings are illustrated below:

Downlink Physical Channels are set as per 3GPP TS34.121-1 v9.0.0 E.5.0

Table E.5.0: Levels for HSDPA connection setup

Parameter During Connection setup	Unit	Value
P-CPICH_Ec/Ior	dB	-10
P-CCPCH and SCH_Ec/Ior	dB	-12
PICH _Ec/Ior	dB	-15
HS-PDSCH	dB	off
HS-SCCH_1	dB	off
DPCH_Ec/Ior	dB	-5
OCNS_Ec/Ior	dB	-3.1

Call is set up as per 3GPP TS34.108 v9.5.0 sub clause 7.3.13

The configurations of the fixed reference channels for HSDPA RF tests are described in 3GPP TS 34.121, annex C for FDD and 3GPP TS 34.122.

UL VERIFICATION SERVICES INC. FORM NO: CCSUP4701I
47173 BENICIA STREET, FREMONT, CA 94538, USA TEL: (510) 771-1000 FAX: (510) 661-0888

This report shall not be reproduced except in full, without the written approval of UL Verification Services Inc.

Table C.8.1.12: Fixed Reference Channel H-Set 12

Parameter	Unit	Value
Nominal Avg. Inf. Bit Rate	kbps	60
Inter-TTI Distance	TTI's	1
Number of HARQ Processes	Processes	6
Information Bit Payload (N_{INF})	Bits	120
Number Code Blocks	Blocks	1
Binary Channel Bits Per TTI	Bits	960
Total Available SML's in UE	SML's	19200
Number of SML's per HARQ Proc.	SML's	3200
Coding Rate		0.15
Number of Physical Channel Codes	Codes	1
Modulation		QPSK
Note 1: The RMC is intended to be used for DC-HSDPA mode and both cells shall transmit with identical parameters as listed in the table. Note 2: Maximum number of transmission is limited to 1, i.e., retransmission is not allowed. The redundancy and constellation version 0 shall be used.		

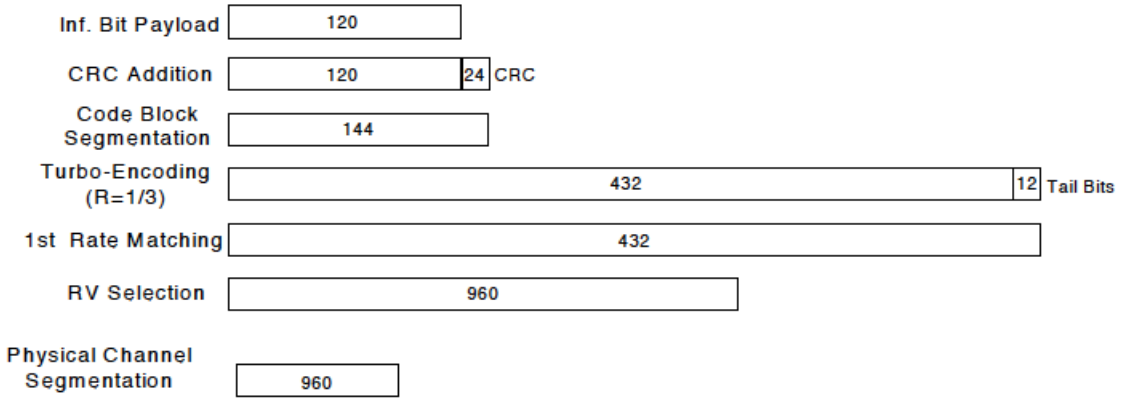

Figure C.8.19: Coding rate for Fixed reference Channel H-Set 12 (QPSK)

The following 4 Sub-tests for HSDPA were completed according to Release 6 procedures in section 5.2 of 3GPP TS34.121. A summary of subtest settings are illustrated below:

	Mode	Rel6 HSDPA	Rel6 HSDPA	Rel6 HSDPA	Rel6 HSDPA
	Subtest	1	2	3	4
WCDMA General Settings	Loopback Mode	Test Mode 1			
	Rel99 RMC	12.2kbps RMC			
	HSDPA FRC	H-Set1			
	Power Control Algorithm	Algorithm2			
	βc	2/15	12/15	15/15	15/15
	βd	15/15	15/15	8/15	4/15
	βd (SF)	64			

UL VERIFICATION SERVICES INC. FORM NO: CCSUP4701I
47173 BENICIA STREET, FREMONT, CA 94538, USA TEL: (510) 771-1000 FAX: (510) 661-0888

This report shall not be reproduced except in full, without the written approval of UL Verification Services Inc.

	βc/βd	2/15	12/15	15/8	15/4
	βhs	4/15	24/15	30/15	30/15
	MPR	0	0	0.5	0.5
HSDPA Specific Settings	DACK	8			
	DNAK	8			
	DCQI	8			
	Ack-Nack Repetition factor	3			
	CQI Feedback	4ms			
	CQI Repetition Factor	2			
	Ahs = βhs/ βc	30/15			

Up commands are set continuously to set the UE to Max power.

8.3.1. UMTS DC-HSDPA OUTPUT POWER RESULT

Band	Mode	Subset	Ch.	f(MHz)	Conducted Power (dBm) Avg (dBm)
Band 5	HSDPA	1	4132	826.4	22.4
			4183	836.6	22.2
			4233	846.6	22.0
		2	4132	826.4	22.4
			4183	836.6	22.2
			4233	846.6	22.1
		3	4132	826.4	21.8
			4183	836.6	21.6
			4233	846.6	21.5
		4	4132	826.4	21.8
			4183	836.6	21.6
			4233	846.6	21.5
Band 2	HSDPA	1	9262	1852.4	20.5
			9400	1880	20.4
			9538	1907.6	20.1
		2	9262	1852.4	20.3
			9400	1880	20.4
			9538	1907.6	19.6
		3	9262	1852.4	20.1

UL VERIFICATION SERVICES INC. FORM NO: CCSUP4701I
47173 BENICIA STREET, FREMONT, CA 94538, USA TEL: (510) 771-1000 FAX: (510) 661-0888

This report shall not be reproduced except in full, without the written approval of UL Verification Services Inc.

			9400	1880	19.9
			9538	1907.6	19.6
		4	9262	1852.4	20.2
			9400	1880	19.9
			9538	1907.6	19.5

UL VERIFICATION SERVICES INC. FORM NO: CCSUP4701I
47173 BENICIA STREET, FREMONT, CA 94538, USA TEL: (510) 771-1000 FAX: (510) 661-0888

This report shall not be reproduced except in full, without the written approval of UL Verification Services Inc.

9. PEAK TO AVERAGE RATIO

Test Procedure

Per KDB 971168 D01 Power Meas License Digital Systems v02r01

Test Spec

In addition, when the transmitter power is measured in terms of average value, the peak-to-average ratio of the power shall not exceed 13 dB.

9.1. CONDUCTED PEAK TO AVERAGE RESULT

Band Band 2 HSDPA	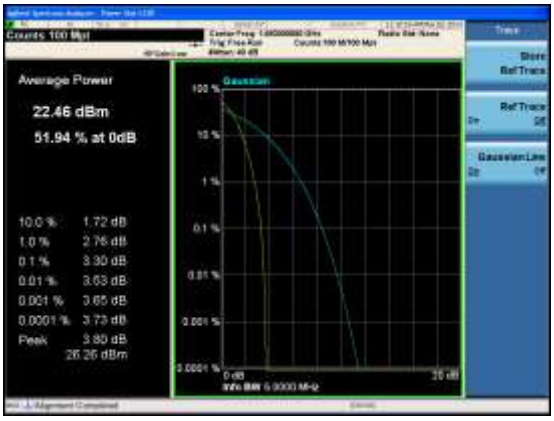 Band WCDMA B2 HSDPA	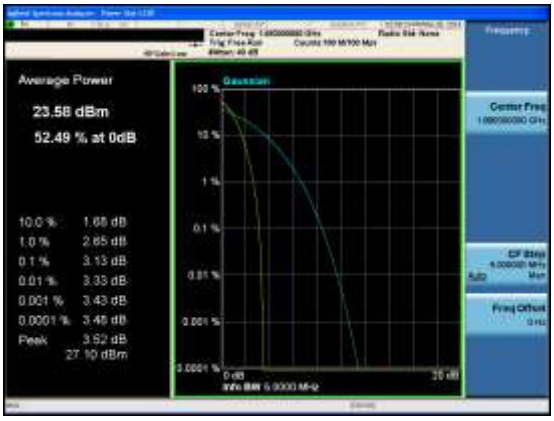 Band WCDMA B2 REL99

UL VERIFICATION SERVICES INC. FORM NO: CCSUP4701I
47173 BENICIA STREET, FREMONT, CA 94538, USA TEL: (510) 771-1000 FAX: (510) 661-0888

This report shall not be reproduced except in full, without the written approval of UL Verification Services Inc.

Band Band 5 HSDPA	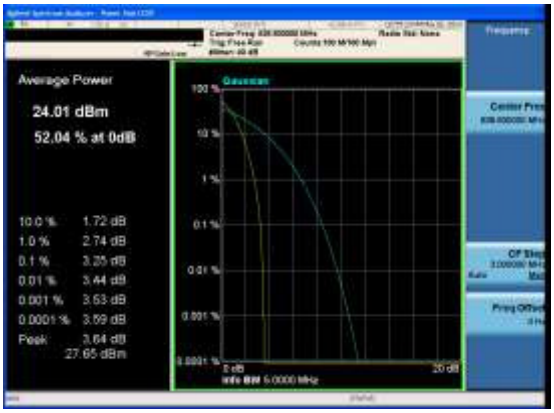 Band WCDMA B5 HSDPA	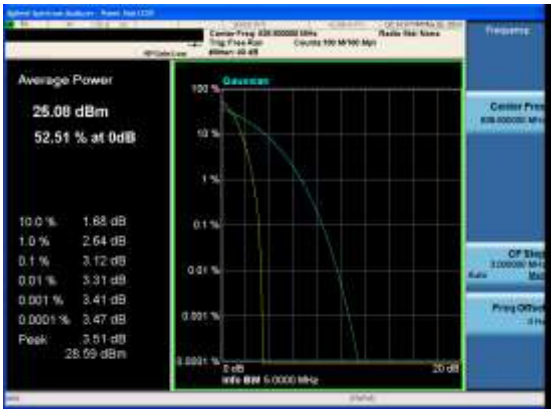 Band WCDMA B5 REL99

UL VERIFICATION SERVICES INC. FORM NO: CCSUP4701I
47173 BENICIA STREET, FREMONT, CA 94538, USA TEL: (510) 771-1000 FAX: (510) 661-0888

This report shall not be reproduced except in full, without the written approval of UL Verification Services Inc.

10. LIMITS AND CONDUCTED RESULTS

10.1. OCCUPIED BANDWIDTH

RULE PART(S)

FCC: §2.1049
IC: RSS-132, 4.5; RSS-133, 6.5

LIMITS

For reporting purposes only

TEST PROCEDURE

The transmitter output was connected to a calibrated coaxial cable and coupler, the other end of which was connected to a spectrum analyzer. The occupied bandwidth was measured with the spectrum analyzer at the low, middle and high channel in each band. The -26dB bandwidth was also measured and recorded.

(KDB 971168 D01 Power Meas License Digital Systems v02r01 - 06/07/2013)

UL VERIFICATION SERVICES INC. FORM NO: CCSUP4701I
47173 BENICIA STREET, FREMONT, CA 94538, USA TEL: (510) 771-1000 FAX: (510) 661-0888

This report shall not be reproduced except in full, without the written approval of UL Verification Services Inc.

10.1.1. OCCUPIED BANDWIDTH RESULTS

Band	Mode	Channel	f (MHz)	99% BW (KHz)	-26dB BW (KHz)
GSM850	GPRS	128	824.2	244	317
		190	836.6	243	318
		251	848.8	242	314
	EGPRS	128	824.2	241	311
		190	836.6	238	305
		251	848.8	236	303
GSM1900	GPRS	512	1850.2	242	317
		661	1880	242	315
		810	1909.8	245	314
	EGPRS	512	1850.2	243	305
		661	1880	241	314
		810	1909.8	239	302
Band 5	REL99	4132	826.4	4166	4629
		4183	836.6	4154	4624
		4233	846.6	4151	4625
	HSDPA	4132	826.4	4171	4625
		4183	836.6	4147	4618
		4233	846.6	4144	4624
Band 2	REL99	9262	1852.4	4157	4629
		9400	1880	4147	4628
		9538	1907.6	4149	4627
	HSDPA	9262	1852.4	4144	4614
		9400	1880	4150	4619
		9538	1907.6	4146	4595

UL VERIFICATION SERVICES INC. FORM NO: CCSUP4701I
47173 BENICIA STREET, FREMONT, CA 94538, USA TEL: (510) 771-1000 FAX: (510) 661-0888

This report shall not be reproduced except in full, without the written approval of UL Verification Services Inc.

10.1.2. OCCUPIED BANDWIDTH PLOTS

Band Band 2 HSDPA	 Band WCDMA B2 HSDPA OBW	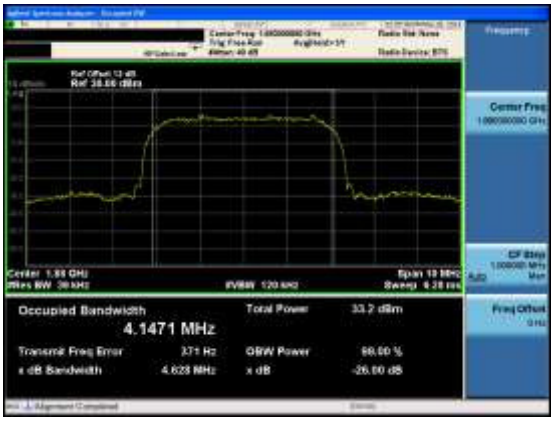 Band WCDMA B2 REL99 OBW
Band Band 5 HSDPA	 Band WCDMA B5 HSDPA OBW	 Band WCDMA B5 REL99 OBW

UL VERIFICATION SERVICES INC. FORM NO: CCSUP4701I
47173 BENICIA STREET, FREMONT, CA 94538, USA TEL: (510) 771-1000 FAX: (510) 661-0888

This report shall not be reproduced except in full, without the written approval of UL Verification Services Inc.

Band GSM1900 EGPRS	 Band GSM1900 EGPRS OBW Mid channel	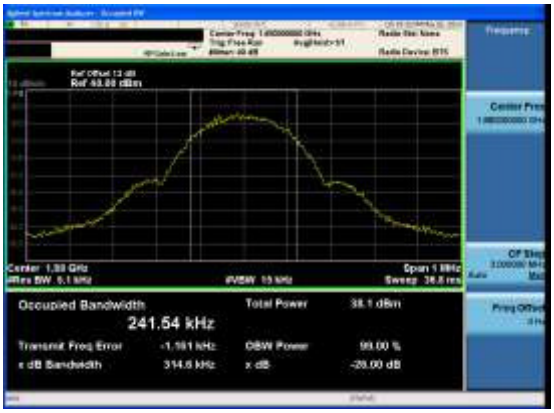 Band GSM1900 GPRS OBW Mid channel
Band GSM850 EGPRS	 Band GSM850 EGPRS OBW Mid channel	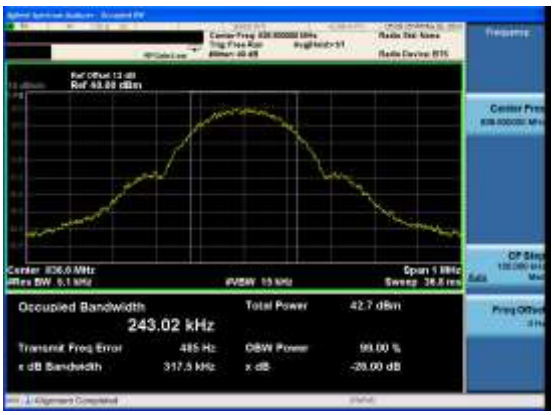 Band GSM850 GPRS OBW Mid channel

UL VERIFICATION SERVICES INC. FORM NO: CCSUP4701I
47173 BENICIA STREET, FREMONT, CA 94538, USA TEL: (510) 771-1000 FAX: (510) 661-0888

This report shall not be reproduced except in full, without the written approval of UL Verification Services Inc.

10.2. BAND EDGE EMISSIONS

RULE PART(S)

FCC: §22.359, §24.238

LIMITS

The power of any emission outside of the authorized operating frequency ranges must be attenuated below the transmitting power (P) by a factor of at least 43 + 10 log (P) dB.

TEST PROCEDURE

Per KDB 971168 D01 Power Meas License Digital Systems v02r01
The transmitter output was connected to an Agilent 8960 or a CMW500 Test Set and configured to operate at maximum power. The band edge emissions were measured at the required operating frequencies in each band on the Spectrum Analyzer.

RESULTS

UL VERIFICATION SERVICES INC. FORM NO: CCSUP4701I
47173 BENICIA STREET, FREMONT, CA 94538, USA TEL: (510) 771-1000 FAX: (510) 661-0888

This report shall not be reproduced except in full, without the written approval of UL Verification Services Inc.

10.2.1. BAND EDGE PLOTS

Band Band 2 HSDPA	 Band WCDMA B2 HSDPA CBE	 Band WCDMA B2 HSDPA CBE
Band Band 2 REL99	 Band WCDMA B2 REL99 CBE	 Band WCDMA B2 REL99 CBE

UL VERIFICATION SERVICES INC. FORM NO: CCSUP4701I
47173 BENICIA STREET, FREMONT, CA 94538, USA TEL: (510) 771-1000 FAX: (510) 661-0888

This report shall not be reproduced except in full, without the written approval of UL Verification Services Inc.

Band Band 5 HSDPA	 Band WCDMA B5 HSDPA CBE	 Band WCDMA B5 HSDPA CBE
Band Band 5 REL99	 Band WCDMA B5 REL99 CBE	 Band WCDMA B5 REL99 CBE

UL VERIFICATION SERVICES INC. FORM NO: CCSUP4701I
47173 BENICIA STREET, FREMONT, CA 94538, USA TEL: (510) 771-1000 FAX: (510) 661-0888

This report shall not be reproduced except in full, without the written approval of UL Verification Services Inc.

Band GSM1900 EGPRS	 Band GSM1900 EGPRS CBE Low channel	 Band GSM1900 EGPRS CBE High channel
Band GSM1900 GPRS	 Band GSM1900 GPRS CBE Low channel	 Band GSM1900 GPRS CBE High channel

UL VERIFICATION SERVICES INC. FORM NO: CCSUP4701I
47173 BENICIA STREET, FREMONT, CA 94538, USA TEL: (510) 771-1000 FAX: (510) 661-0888

This report shall not be reproduced except in full, without the written approval of UL Verification Services Inc.

Band GSM850 EGPRS	 Band GSM850 EGPRS CBE Low channel	 Band GSM850 EGPRS CBE High channel
Band GSM850 GPRS	 Band GSM850 GPRS CBE Low channel	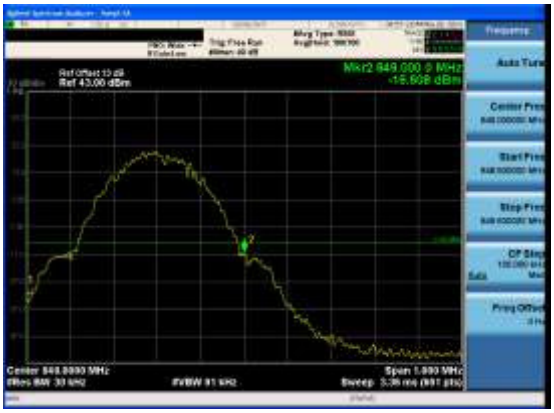 Band GSM850 GPRS CBE High channel

UL VERIFICATION SERVICES INC. FORM NO: CCSUP4701I
47173 BENICIA STREET, FREMONT, CA 94538, USA TEL: (510) 771-1000 FAX: (510) 661-0888

This report shall not be reproduced except in full, without the written approval of UL Verification Services Inc.

10.3. OUT OF BAND EMISSIONS

RULE PART(S)

FCC: §2.1051, §22.901, §22.917, §24.238

LIMITS

The power of any emission outside of the authorized operating frequency ranges must be attenuated below the transmitting power (P) by a factor of at least 43 + 10 log (P) dB.

TEST PROCEDURE

Per KDB 971168 D01 Power Meas License Digital Systems v02r01

The RF output of the transmitter was connected to a spectrum analyzer through a calibrated coaxial cable. Sufficient scans were taken to show the out-of-band Emissions, if any, up to 10th harmonic. Multiple sweeps were recorded in maximum hold mode using a peak detector to ensure that the worst-case emissions were caught.

RESULTS

UL VERIFICATION SERVICES INC. FORM NO: CCSUP4701I
47173 BENICIA STREET, FREMONT, CA 94538, USA TEL: (510) 771-1000 FAX: (510) 661-0888

This report shall not be reproduced except in full, without the written approval of UL Verification Services Inc.

10.3.1. OUT OF BAND EMISSIONS RESULT

Band	Mode	f (MHz)	Spur (dBm)	Spec (dBm)	Delta (dB)
GSM850	GPRS	824.2	-22.498	-13	-9.498
		836.6	-22.83	-13	-9.83
		848.8	-22.595	-13	-9.595
	EGPRS	824.2	-22.578	-13	-9.578
		836.6	-22.515	-13	-9.515
		848.8	-22.23	-13	-9.23
GSM1900	GPRS	1850.2	-22.416	-13	-9.416
		1880	-22.66	-13	-9.66
		1909.8	-21.778	-13	-8.778
	EGPRS	1850.2	-23.611	-13	-10.611
		1880	-22.37	-13	-9.37
		1909.8	-22.383	-13	-9.383
Band 5	REL99	826.4	-22.578	-13	-9.578
		836.6	-25.031	-13	-12.031
		846.6	-24.797	-13	-11.797
	HSDPA	826.4	-21.923	-13	-8.923
		836.6	-23.34	-13	-10.34
		846.6	-22.55	-13	-9.55
Band 2	REL99	1852.4	-21.67	-13	-8.67
		1880	-23.21	-13	-10.21
		1907.6	-22.79	-13	-9.79
	HSDPA	1852.4	-23.545	-13	-10.545
		1880	-22.667	-13	-9.667
		1907.6	-22.797	-13	-9.797

UL VERIFICATION SERVICES INC. FORM NO: CCSUP4701I
47173 BENICIA STREET, FREMONT, CA 94538, USA TEL: (510) 771-1000 FAX: (510) 661-0888

This report shall not be reproduced except in full, without the written approval of UL Verification Services Inc.

10.3.2. OUT OF BAND EMISSIONS PLOTS

Band Band 2 HSDPA	 Band WCDMA B2 HSDPA CSE	 Band WCDMA B2 REL99 CSE
Band Band 5 HSDPA	 Band WCDMA B5 HSDPA CSE	 Band WCDMA B5 REL99 CSE

UL VERIFICATION SERVICES INC. FORM NO: CCSUP4701I
47173 BENICIA STREET, FREMONT, CA 94538, USA TEL: (510) 771-1000 FAX: (510) 661-0888

This report shall not be reproduced except in full, without the written approval of UL Verification Services Inc.

Band GSM1900 EGPRS	 Band GSM1900 EGPRS CSE Mid channel	 Band GSM1900 GPRS CSE Mid channel
Band GSM850 EGPRS	 Band GSM850 EGPRS CSE Mid channel	 Band GSM850 GPRS CSE Mid channel

UL VERIFICATION SERVICES INC. FORM NO: CCSUP4701I
47173 BENICIA STREET, FREMONT, CA 94538, USA TEL: (510) 771-1000 FAX: (510) 661-0888

This report shall not be reproduced except in full, without the written approval of UL Verification Services Inc.

10.4. FREQUENCY STABILITY

RULE PART(S)

FCC: §2.1055, §22.355, §24.235,

LIMITS

§22.355 - The carrier frequency shall not depart from the reference frequency in excess of ±2.5 ppm for mobile stations.

§24.235 - The frequency stability shall be sufficient to ensure that the fundamental emission stays within the authorized frequency block.

TEST PROCEDURE

Per KDB 971168 D01 Power Meas License Digital Systems v02r01

RESULTS

See the following pages.

UL VERIFICATION SERVICES INC. FORM NO: CCSUP4701I
47173 BENICIA STREET, FREMONT, CA 94538, USA TEL: (510) 771-1000 FAX: (510) 661-0888

This report shall not be reproduced except in full, without the written approval of UL Verification Services Inc.

10.4.1. FREQUENCY STABILITY RESULTS

CELL, WCDMA MODULATION – MID CHANNEL

Reference Frequency: Cellular Mid Channel 836.836.599997MHz @ 20°C Limit: to stay +- 2.5 ppm = 2091.500 Hz				
Power Supply (Vdc)	Environment Temperature (°C)	Frequency Deviation Measureed with Time Elapse		
		(MHz)	Delta (ppm)	Limit (ppm)
3.80	50	836.600003	-0.007	2.5
3.80	40	836.600001	-0.005	2.5
3.80	30	836.599996	0.001	2.5
3.80	***20***	***836.599997***	***0***	***2.5***
3.80	10	836.599998	-0.001	2.5
3.80	0	836.599997	0.000	2.5
3.80	-10	836.599996	0.001	2.5
3.80	-20	836.600007	-0.012	2.5
3.80	-30	836.600003	-0.007	2.5

Reference Frequency: Cellular Mid Channel836.599997 MHz @ 20°C Limit: to stay +- 2.5 ppm = 2091.500 Hz				
Power Supply (Vdc)	Environment Temperature (°C)	Frequency Deviation Measureed with Time Elapse		
		(MHz)	Delta (ppm)	Limit (ppm)
3.80	***20***	***836.599997***	***0***	***2.5***
4.30	20	836.599996	*0.001*	2.5
3.3(end volt)	20	836.599991	*0.007*	2.5

UL VERIFICATION SERVICES INC. FORM NO: CCSUP4701I
47173 BENICIA STREET, FREMONT, CA 94538, USA TEL: (510) 771-1000 FAX: (510) 661-0888

This report shall not be reproduced except in full, without the written approval of UL Verification Services Inc.

PCS, WCDMA MODULATION – MID CHANNEL

Reference Frequency: PCS Mid Channel 1880.000005MHz @ 20ºC Limit: within the authorized block or +- 2.5 ppm = 4700.000 Hz				
Power Supply (Vdc)	Environment Temperature (*C)	Frequency Deviation Measureed with Time Elapse (MHz)	Delta (ppm)	Limit (ppm)
3.80	50	1880.000006	-0.001	2.5
3.80	40	1880.000005	0.000	2.5
3.80	30	1880.000003	0.001	2.5
3.80	***20***	***1880.000005***	***0***	***2.5***
3.80	10	1880.000006	-0.001	2.5
3.80	0	1880.000005	0.000	2.5
3.80	-10	1880.000005	0.000	2.5
3.80	-20	1880.000007	-0.001	2.5
3.80	-30	1880.000004	0.001	2.5

Reference Frequency: PCS Mid Channel 1880.000005MHz @ 20ºC Limit: within the authorized block or +- 2.5 ppm = 4700.000 Hz				
Power Supply (Vdc)	Environment Temperature (*C)	Frequency Deviation Measureed with Time Elapse (MHz)	Delta (ppm)	Limit (ppm)
3.80	***20***	***1880.000005***	***0.00000***	***2.5***
4.30	20	1880.000005	*0.00000*	2.5
3.3(end volt)	20	1880.000006	*-0.00053*	2.5

UL VERIFICATION SERVICES INC. FORM NO: CCSUP4701I
47173 BENICIA STREET, FREMONT, CA 94538, USA TEL: (510) 771-1000 FAX: (510) 661-0888

This report shall not be reproduced except in full, without the written approval of UL Verification Services Inc.

11. RADIATED TEST RESULTS

11.1. RADIATED POWER (ERP & EIRP)

RULE PART(S)

FCC: §2.1046, §22.913, §24.232.

LIMITS

22.913(a) - The ERP of mobile transmitters and auxiliary test transmitters must not exceed 7 Watts.

24.232(c) - Mobile/portable stations are limited to 2 watts e.i.r.p. peak power and the equipment must employ means to limit the power to the minimum necessary for successful communications.

1. Power is given in terms of effective radiated power (ERP).
2. 2Applicants in the Los Angeles, CA, area who demonstrate a need to serve both the downtown and fringe areas will be permitted to utilize an ERP of 1 kw at the following mountaintop sites: Santiago Park, Sierra Peak, Mount Lukens, and Mount Wilson.
3. 3Stations with antennas below 305 m (1,000 ft) (AAT) will be restricted to a maximum power of 1 kw (ERP).

In addition, when the transmitter power is measured in terms of average value, the peak-to-average ratio of the power shall not exceed 13dB.

TEST PROCEDURE

ANSI / TIA / EIA 603C Clause 2.2.17

TEST RESULTS

11.1.1. ERP/EIRP Results

Band	Mode	Channel	f(MHz)	ERP / EIRP	
				dBm	mW
Band 2	REL99	9262	1852.4	23.15	206.54
		9400	1880	22.55	179.89
		9538	1907.6	22.29	169.43
	HSDPA	9262	1852.4	22.55	179.89
		9400	1880	21.96	157.04
		9538	1907.6	21.55	142.89

UL VERIFICATION SERVICES INC. FORM NO: CCSUP4701I
47173 BENICIA STREET, FREMONT, CA 94538, USA TEL: (510) 771-1000 FAX: (510) 661-0888

This report shall not be reproduced except in full, without the written approval of UL Verification Services Inc.

Band	Mode	Channel	f(MHz)	ERP / EIRP	
				dBm	mW
Band 5	REL99	4132	826.4	16.63	46.03
		4183	836.6	17.50	56.23
		4233	846.6	16.97	49.77
	HSDPA	4132	826.4	15.2	33.11
		4183	836.6	16.5	44.67
		4233	846.6	16.43	43.95

Band	Mode	Channel	f(MHz)	ERP / EIRP	
				dBm	mW
GSM1900	GPRS	512	1850.2	30.65	1161.45
		661	1880	29.55	901.57
		810	1909.8	29.45	881.05
	EGPRS	512	1850.2	28.02	633.87
		661	1880	25.45	350.75
		810	1909.8	25.45	350.75

Band	Mode	Channel	f(MHz)	ERP / EIRP	
				dBm	mW
GSM850	GPRS	128	824.2	25.821	382.03
		190	836.6	25.847	384.33
		251	848.8	25.952	393.73
	EGPRS	128	824.2	24.165	260.92
		190	836.6	24.543	284.64
		251	848.8	24.435	277.65

UL VERIFICATION SERVICES INC. FORM NO: CCSUP4701I
47173 BENICIA STREET, FREMONT, CA 94538, USA TEL: (510) 771-1000 FAX: (510) 661-0888

This report shall not be reproduced except in full, without the written approval of UL Verification Services Inc.

11.1.2. ERP/EIRP DATA

Band

Band 2

HSDPA

High Frequency Fundamental Measurement
Compliance Certification Services Chamber A

Company: SAMSUNG
Project #: 14U17788
Date: 05/31/14
Test Engineer: K.Kedida
Configuration: EUT ONLY, X Position
Mode: WCDMA_1900 MHz_HSDPA

Test Equipment:
Receiving: T136, and Chamber A SMA Cables
Substitution: Horn T72 Substitution, 4ft SMA Cable (244639001) Warehouse

f MHz	SG reading (dBm)	Ant. Pol. (H/V)	Cable Loss (dB)	Antenna Gain (dBi)	EIRP (dBm)	Limit (dBm)	Margin (dB)	Notes
Low Ch								
1852.40	11.10	V	0.85	7.9	18.15	33.0	-14.9	
1852.40	15.50	H	0.85	7.9	22.55	33.0	-10.5	
Mid Ch								
1880.00	10.80	V	0.85	7.9	17.85	33.0	-15.2	
1880.00	14.91	H	0.85	7.9	21.96	33.0	-11.0	
High Ch								
1907.60	10.90	V	0.85	7.8	17.85	33.0	-15.2	
1907.60	14.60	H	0.85	7.8	21.55	33.0	-11.5	

Rev. 3.17.11
Note: For Band 4 EIRP limit is 30dBm

UL VERIFICATION SERVICES INC. FORM NO: CCSUP4701I
47173 BENICIA STREET, FREMONT, CA 94538, USA TEL: (510) 771-1000 FAX: (510) 661-0888

This report shall not be reproduced except in full, without the written approval of UL Verification Services Inc.

Band

Band 2

REL99

High Frequency Fundamental Measurement
Compliance Certification Services Chamber A

Company: SAMSUNG
Project #: 14U17788
Date: 05/31/14
Test Engineer: K.Kedida
Configuration: EUT ONLY, X Position
Mode: WCDMA_1900 MHz_Rel 99

Test Equipment:
Receiving: T136, and Chamber A SMA Cables
Substitution: Horn T72 Substitution, 4ft SMA Cable (244639001) Warehouse

f MHz	SG reading (dBm)	Ant. Pol. (H/V)	Cable Loss (dB)	Antenna Gain (dBi)	EIRP (dBm)	Limit (dBm)	Margin (dB)	Notes
Low Ch								
1852.40	13.90	V	0.85	7.9	20.95	33.0	-12.1	
1852.40	16.10	H	0.85	7.9	23.15	33.0	-9.9	
Mid Ch								
1880.00	13.20	V	0.85	7.9	20.25	33.0	-12.8	
1880.00	15.50	H	0.85	7.9	22.55	33.0	-10.5	
High Ch								
1907.60	12.60	V	0.85	7.8	19.55	33.0	-13.5	
1907.60	15.34	H	0.85	7.8	22.29	33.0	-10.7	

Rev. 3.17.11
Note: For Band 4 EIRP limit is 30dBm

UL VERIFICATION SERVICES INC. FORM NO: CCSUP4701I
47173 BENICIA STREET, FREMONT, CA 94538, USA TEL: (510) 771-1000 FAX: (510) 661-0888

This report shall not be reproduced except in full, without the written approval of UL Verification Services Inc.

Band

Band 5

HSDPA

High Frequency Substitution Measurement
Compliance Certification Services Chamber A

Company: Samsung
Project #: 14U17788
Date: 05/30/14
Test Engineer: O. Stoelting
Configuration: EUT ONLY, X Position
Mode: WCDMA_HSDPA_850

Test Equipment:
Receiving: T712, and Chamber D Cable (Setup this one for testing EUT)
Substitution: Dipole T416, 22ft SMA Cable

f MHz	SG reading (dBm)	Ant. Pol. (H/V)	Cable Loss (dB)	Antenna Gain (dBd)	ERP (dBm)	Limit (dBm)	Margin (dB)	Notes
Low Ch								
826.40	12.46	V	0.5	0.0	11.96	38.5	-26.5	
826.40	15.70	H	0.5	0.0	15.20	38.5	-23.3	
Mid Ch								
836.60	11.79	V	0.5	0.0	11.29	38.5	-27.2	
836.60	17.00	H	0.5	0.0	16.50	38.5	-21.9	
High Ch								
846.60	11.01	V	0.5	0.0	10.51	38.5	-27.9	
846.60	16.93	H	0.5	0.0	16.43	38.5	-22.0	

Rev. 3.17.11

UL VERIFICATION SERVICES INC. FORM NO: CCSUP4701I
47173 BENICIA STREET, FREMONT, CA 94538, USA TEL: (510) 771-1000 FAX: (510) 661-0888

This report shall not be reproduced except in full, without the written approval of UL Verification Services Inc.

Band

Band 5

REL99

High Frequency Substitution Measurement
UL Verification Services, Inc. Chamber A

Company: Samsung
Project #: 14U17788
Date: 05/31/14
Test Engineer: O. Stoelting
Configuration: EUT ONLY, X Position
Mode: WCDMA_Rel99_850

Test Equipment:
Receiving: T130, and Chamber A Cable (Setup this one for testing EUT)
Substitution: Dipole T416, 16ft SMA Cable (SN # 247217 006) Warehouse.

f MHz	SG reading (dBm)	Ant. Pol. (H/V)	Cable Loss (dB)	Antenna Gain (dBd)	ERP (dBm)	Limit (dBm)	Margin (dB)	Notes
Low Ch								
826.40	13.28	V	0.5	0.0	12.78	38.5	-25.7	
826.40	17.13	H	0.5	0.0	16.63	38.5	-21.8	
Mid Ch								
836.60	12.89	V	0.5	0.0	12.39	38.5	-26.1	
836.60	18.00	H	0.5	0.0	17.50	38.5	-20.9	
High Ch								
846.60	13.02	V	0.5	0.0	12.52	38.5	-25.9	
846.60	17.47	H	0.5	0.0	16.97	38.5	-21.5	

Rev. 3.17.11
Note: For Band 13/17 ERP limit is 34.77dBm; For Band 26 limit is 50dBm

UL VERIFICATION SERVICES INC. FORM NO: CCSUP4701I
47173 BENICIA STREET, FREMONT, CA 94538, USA TEL: (510) 771-1000 FAX: (510) 661-0888

This report shall not be reproduced except in full, without the written approval of UL Verification Services Inc.

Band

GSM1900

EGPRS

High Frequency Fundamental Measurement
Compliance Certification Services Chamber A

Company: SAMSUNG
Project #: 14U17788
Date: 05/31/14
Test Engineer: K.Kedida
Configuration: EUT ONLY, X Position
Mode: EGPRS 1900MHz

Test Equipment:
Receiving: T136, and Chamber A SMA Cables
Substitution: Horn T72 Substitution, 4ft SMA Cable (244639001) Warehouse

f GHz	SG reading (dBm)	Ant. Pol. (H/V)	Cable Loss (dB)	Antenna Gain (dBi)	EIRP (dBm)	Limit (dBm)	Delta (dB)	Notes
Low Ch								
1.850	18.2	V	0.85	7.90	25.25	33.0	-7.8	
1.850	21.0	H	0.85	7.90	28.02	33.0	-5.0	
Mid Ch								
1.880	16.2	V	0.85	7.90	23.25	33.0	-9.8	
1.880	18.4	H	0.85	7.90	25.45	33.0	-7.6	
High Ch								
1.910	16.8	V	0.85	7.80	23.75	33.0	-9.3	
1.910	18.5	H	0.85	7.80	25.45	33.0	-7.6	

Rev. 3.17.11

UL VERIFICATION SERVICES INC. FORM NO: CCSUP4701I
47173 BENICIA STREET, FREMONT, CA 94538, USA TEL: (510) 771-1000 FAX: (510) 661-0888

This report shall not be reproduced except in full, without the written approval of UL Verification Services Inc.

Band

GSM1900

GPRS

High Frequency Fundamental Measurement
Compliance Certification Services Chamber A

Company: SAMSUNG
Project #: 14U17788
Date: 05/31/14
Test Engineer: K.Kedida
Configuration: EUT ONLY, X Position
Mode: GPRS 1900MHz

Test Equipment:
Receiving: T136, and Chamber A SMA Cables
Substitution: Horn T72 Substitution, 4ft SMA Cable (244639001) Warehouse

f GHz	SG reading (dBm)	Ant. Pol. (H/V)	Cable Loss (dB)	Antenna Gain (dBi)	EIRP (dBm)	Limit (dBm)	Delta (dB)	Notes
Low Ch								
1.850	20.7	V	0.85	7.90	27.79	33.0	-5.2	
1.850	23.6	H	0.85	7.90	30.65	33.0	-2.4	
Mid Ch								
1.880	19.9	V	0.85	7.90	26.99	33.0	-6.0	
1.880	22.5	H	0.85	7.90	29.55	33.0	-3.5	
High Ch								
1.910	19.7	V	0.85	7.80	26.65	33.0	-6.4	
1.910	22.5	H	0.85	7.80	29.45	33.0	-3.6	

Rev. 3.17.11

UL VERIFICATION SERVICES INC. FORM NO: CCSUP4701I
47173 BENICIA STREET, FREMONT, CA 94538, USA TEL: (510) 771-1000 FAX: (510) 661-0888

This report shall not be reproduced except in full, without the written approval of UL Verification Services Inc.

Band

GSM850

EGPRS

High Frequency Substitution Measurement
Compliance Certification Services Chamber D

Company: Samsung
Project #: 14U17788
Date: 05/30/14
Test Engineer: O. Stoelting
Configuration: EUT ONLY, X Position
Mode: EGRPS 850MHz

Test Equipment:
Receiving: T712, and Chamber D Cable (Setup this one for testing EUT)
Substitution: Dipole T416, 22ft SMA Cable

f MHz	SG reading (dBm)	Ant. Pol. (H/V)	Cable Loss (dB)	Antenna Gain (dBd)	ERP (dBm)	Limit (dBm)	Margin (dB)	Notes
Low Ch								
824.20	20.51	V	0.9	0.0	19.61	38.5	-18.8	
824.20	25.06	H	0.9	0.0	24.17	38.5	-14.3	
Mid Ch								
836.60	19.70	V	0.9	0.0	18.80	38.5	-19.6	
836.60	25.44	H	0.9	0.0	24.54	38.5	-13.9	
High Ch								
848.80	19.96	V	0.9	0.0	19.06	38.5	-19.4	
848.80	25.33	H	0.9	0.0	24.44	38.5	-14.0	

Rev. 3.17.11

UL VERIFICATION SERVICES INC. FORM NO: CCSUP4701I
47173 BENICIA STREET, FREMONT, CA 94538, USA TEL: (510) 771-1000 FAX: (510) 661-0888

This report shall not be reproduced except in full, without the written approval of UL Verification Services Inc.

Band

GSM850

GPRS

High Frequency Substitution Measurement
Compliance Certification Services Chamber D

Company: Samsung
Project #: 14U17788
Date: 05/30/14
Test Engineer: O. Stoelting
Configuration: EUT ONLY, X Position
Mode: GRPS 850MHz

Test Equipment:
Receiving: T712, and Chamber D Cable (Setup this one for testing EUT)
Substitution: Dipole T416, 22ft SMA Cable

f MHz	SG reading (dBm)	Ant. Pol. (H/V)	Cable Loss (dB)	Antenna Gain (dBd)	ERP (dBm)	Limit (dBm)	Margin (dB)	Notes
Low Ch								
824.20	21.25	V	0.9	0.0	20.35	38.5	-18.1	
824.20	26.72	H	0.9	0.0	25.82	38.5	-12.6	
Mid Ch								
836.60	20.81	V	0.9	0.0	19.91	38.5	-18.5	
836.60	26.75	H	0.9	0.0	25.85	38.5	-12.6	
High Ch								
848.80	19.61	V	0.9	0.0	18.71	38.5	-19.7	
848.80	26.85	H	0.9	0.0	25.95	38.5	-12.5	

Rev. 3.17.11

UL VERIFICATION SERVICES INC. FORM NO: CCSUP4701I
47173 BENICIA STREET, FREMONT, CA 94538, USA TEL: (510) 771-1000 FAX: (510) 661-0888

This report shall not be reproduced except in full, without the written approval of UL Verification Services Inc.

11.2. FIELD STRENGTH OF SPURIOUS RADIATION

RULE PART(S)

FCC: §2.1053, §22.917, §24.238

LIMIT

§22.917 (e) and §24.238 (a): Out of band emissions. The power of any emission outside of the authorized operating frequency ranges must be attenuated below the transmitting power (P) by a factor of at least 43 + 10 log (P) dB

TEST PROCEDURE

For Cellular equipment - Compliance with these rules is based on the use of measurement instrumentation employing a resolution bandwidth of 100 kHz or greater. In the 1 MHz bands immediately outside and adjacent to the frequency block a resolution bandwidth of at least one percent of the emission bandwidth of the fundamental emission of the transmitter may be employed. A narrower resolution bandwidth is permitted in all cases to improve measurement accuracy provided the measured power is integrated over the full required measurement bandwidth (i.e. 100 kHz or 1 percent of emission bandwidth, as specified). The emission bandwidth is defined as the width of the signal between two points, one below the carrier center frequency and one above the carrier center frequency, outside of which all emissions are attenuated at least 26 dB below the transmitter power.

For PCS equipment - Compliance with these rules is based on the use of measurement instrumentation employing a resolution bandwidth of 1 MHz or greater. However, in the 1 MHz bands immediately outside and adjacent to the frequency block a resolution bandwidth of at least one percent of the emission bandwidth of the fundamental emission of the transmitter may be employed. A narrower resolution bandwidth is permitted in all cases to improve measurement accuracy provided the measured power is integrated over the full required measurement bandwidth (i.e. 1 MHz or 1 percent of emission bandwidth, as specified). The emission bandwidth is defined as the width of the signal between two points, one below the carrier center frequency and one above the carrier center frequency, outside of which all emissions are attenuated at least 26 dB below the transmitter power.

RESULTS

UL VERIFICATION SERVICES INC. FORM NO: CCSUP4701I
47173 BENICIA STREET, FREMONT, CA 94538, USA TEL: (510) 771-1000 FAX: (510) 661-0888

This report shall not be reproduced except in full, without the written approval of UL Verification Services Inc.

11.2.1. SPURIOUS RADIATION DATA

Compliance Certification Services
Above 1GHz High Frequency Substitution Measurement

Company: SAMSUNG
Project #: 14U17788
Date: 05/31/14
Test Engineer: K.Kedida
Configuration: X-Pos. EUT with AC charger & HS
Mode: HSDPA_HARM_ 1900MHz

Chamber	Pre-amplifer	Filter	Limit
5m Chamber A	T34 8449B	Filter 1	Part 24

Band

Band 2

HSDPA

f GHz	SG reading (dBm)	Ant. Pol. (H/V)	Distance (m)	Preamp (dB)	Filter (dB)	EIRP (dBm)	Limit (dBm)	Delta (dB)	Notes
Low Ch, 1852.4MHz									
3.705	-14.9	V	3.0	35.4	1.0	-49.3	-13.0	-36.3	
5.557	-15.5	V	3.0	34.7	1.0	-49.2	-13.0	-36.2	
7.409	-14.5	V	3.0	34.9	1.0	-48.4	-13.0	-35.4	
3.705	-16.5	H	3.0	35.4	1.0	-50.9	-13.0	-37.9	
5.557	-15.0	H	3.0	34.7	1.0	-48.8	-13.0	-35.8	
7.409	-13.9	H	3.0	34.9	1.0	-47.8	-13.0	-34.8	
Mid Ch, 1880MHz									
3.760	-17.3	V	3.0	35.3	1.0	-51.7	-13.0	-38.7	
5.640	-16.1	V	3.0	34.7	1.0	-49.8	-13.0	-36.8	
7.520	-14.9	V	3.0	34.9	1.0	-48.8	-13.0	-35.8	
3.760	-17.2	H	3.0	35.3	1.0	-51.6	-13.0	-38.6	
5.640	-14.2	H	3.0	34.7	1.0	-47.9	-13.0	-34.9	
7.520	-12.7	H	3.0	34.9	1.0	-46.7	-13.0	-33.7	
High Ch, 1907.6MHz									
3.815	-16.6	V	3.0	35.3	1.0	-50.9	-13.0	-37.9	
5.723	-15.7	V	3.0	34.7	1.0	-49.4	-13.0	-36.4	
7.630	-13.6	V	3.0	34.9	1.0	-47.5	-13.0	-34.5	
3.815	-15.3	H	3.0	35.3	1.0	-49.6	-13.0	-36.6	
5.723	-14.9	H	3.0	34.7	1.0	-48.6	-13.0	-35.6	
7.630	-13.2	H	3.0	34.9	1.0	-47.2	-13.0	-34.2	

Rev. 03.03.09

UL VERIFICATION SERVICES INC. FORM NO: CCSUP4701I
47173 BENICIA STREET, FREMONT, CA 94538, USA TEL: (510) 771-1000 FAX: (510) 661-0888

This report shall not be reproduced except in full, without the written approval of UL Verification Services Inc.

Compliance Certification Services
Above 1GHz High Frequency Substitution Measurement

Company: SAMSUNG
Project #: 14U17788
Date: 05/31/14
Test Engineer: K.Kedida
Configuration: X-Pos. EUT with AC charger & HS
Mode: Rel 99_HARM_ 1900MHz

Chamber	Pre-amplifer	Filter	Limit
5m Chamber A	T34 8449B	Filter 1	Part 24

Band

Band 2

REL99

f GHz	SG reading (dBm)	Ant. Pol. (H/V)	Distance (m)	Preamp (dB)	Filter (dB)	EIRP (dBm)	Limit (dBm)	Delta (dB)	Notes
Low Ch, 1852.4MHz									
3.705	-14.3	V	3.0	35.4	1.0	-48.7	-13.0	-35.7	
5.557	-14.5	V	3.0	34.7	1.0	-48.2	-13.0	-35.2	
7.409	-13.6	V	3.0	34.9	1.0	-47.5	-13.0	-34.5	
3.705	-17.5	H	3.0	35.4	1.0	-51.9	-13.0	-38.9	
5.557	-14.7	H	3.0	34.7	1.0	-48.5	-13.0	-35.5	
7.409	-12.2	H	3.0	34.9	1.0	-46.1	-13.0	-33.1	
Mid Ch, 1880MHz									
3.760	-16.8	V	3.0	35.3	1.0	-51.2	-13.0	-38.2	
5.640	-15.5	V	3.0	34.7	1.0	-49.2	-13.0	-36.2	
7.520	-13.7	V	3.0	34.9	1.0	-47.6	-13.0	-34.6	
3.760	-16.3	H	3.0	35.3	1.0	-50.7	-13.0	-37.7	
5.640	-14.7	H	3.0	34.7	1.0	-48.4	-13.0	-35.4	
7.520	-11.6	H	3.0	34.9	1.0	-45.6	-13.0	-32.6	
High Ch, 1907.6MHz									
3.815	-17.0	V	3.0	35.3	1.0	-51.3	-13.0	-38.3	
5.723	-14.8	V	3.0	34.7	1.0	-48.5	-13.0	-35.5	
7.630	-12.4	V	3.0	34.9	1.0	-46.3	-13.0	-33.3	
3.815	-15.4	H	3.0	35.3	1.0	-49.7	-13.0	-36.7	
5.723	-14.3	H	3.0	34.7	1.0	-48.1	-13.0	-35.1	
7.630	-13.0	H	3.0	34.9	1.0	-47.0	-13.0	-34.0	

Rev. 03.03.09

UL VERIFICATION SERVICES INC. FORM NO: CCSUP4701I
47173 BENICIA STREET, FREMONT, CA 94538, USA TEL: (510) 771-1000 FAX: (510) 661-0888

This report shall not be reproduced except in full, without the written approval of UL Verification Services Inc.

Band

Band 5

HSDPA

Compliance Certification Services
Above 1GHz High Frequency Substitution Measurement

Company: Samsung
Project #: 14U17788
Date: 05/31/14
Test Engineer: O. Stoelting
Configuration: X-pos. EUT with AC charger & HS
Mode: WCDMA_HSDPA_ 850

Chamber	Pre-amplifer	Filter	Limit
5m Chamber A	T34 8449B	Filter 1	Part 22

f GHz	SG reading (dBm)	Ant. Pol. (H/V)	Distance (m)	Preamp (dB)	Filter (dB)	EIRP (dBm)	Limit (dBm)	Delta (dB)	Notes
Low Ch, 826.40MHz									
1.652	-9.3	V	3.0	37.4	1.0	-45.7	-13.0	-32.7	
2.479	-23.9	V	3.0	36.4	1.0	-59.3	-13.0	-46.3	
3.306	-27.6	V	3.0	35.8	1.0	-62.4	-13.0	-49.4	
1.652	-13.0	H	3.0	37.4	1.0	-49.4	-13.0	-36.4	
2.479	-28.7	H	3.0	36.4	1.0	-64.1	-13.0	-51.1	
3.306	-27.9	H	3.0	35.8	1.0	-62.7	-13.0	-49.7	
Mid Ch, 836.6MHz									
1.673	-10.0	V	3.0	37.3	1.0	-46.4	-13.0	-33.4	
2.510	-24.9	V	3.0	36.4	1.0	-60.2	-13.0	-47.2	
3.346	-27.2	V	3.0	35.8	1.0	-62.0	-13.0	-49.0	
1.673	-14.1	H	3.0	37.3	1.0	-50.4	-13.0	-37.4	
2.510	-28.7	H	3.0	36.4	1.0	-64.0	-13.0	-51.0	
3.346	-27.5	H	3.0	35.8	1.0	-62.2	-13.0	-49.2	
High Ch, 846.6MHz									
1.693	-11.6	V	3.0	37.3	1.0	-47.9	-13.0	-34.9	
2.539	-20.2	V	3.0	36.3	1.0	-55.5	-13.0	-42.5	
3.386	-27.6	V	3.0	35.7	1.0	-62.3	-13.0	-49.3	
1.693	-11.3	H	3.0	37.3	1.0	-47.6	-13.0	-34.6	
2.539	-6.0	H	3.0	36.3	1.0	-41.4	-13.0	-28.4	
3.386	-25.5	H	3.0	35.7	1.0	-60.2	-13.0	-47.2	

Rev. 03.03.09
Note: No other emissions were detected above the system noise floor.

UL VERIFICATION SERVICES INC. FORM NO: CCSUP4701I
47173 BENICIA STREET, FREMONT, CA 94538, USA TEL: (510) 771-1000 FAX: (510) 661-0888

This report shall not be reproduced except in full, without the written approval of UL Verification Services Inc.

Band

Band 5

REL99

Compliance Certification Services
Above 1GHz High Frequency Substitution Measurement

Company: Samsung
Project #: 14U17788
Date: 05/31/14
Test Engineer: O. Stoelting
Configuration: X-pos. EUT with AC charger & HS
Mode: WCDMA_Rel 99_ 850

Chamber	Pre-amplifer	Filter	Limit
5m Chamber A	T34 8449B	Filter 1	Part 22

f GHz	SG reading (dBm)	Ant. Pol. (H/V)	Distance (m)	Preamp (dB)	Filter (dB)	EIRP (dBm)	Limit (dBm)	Delta (dB)	Notes
Low Ch, 826.40MHz									
1.652	-8.0	V	3.0	37.4	1.0	-44.3	-13.0	-31.3	
2.479	-20.0	V	3.0	36.4	1.0	-55.3	-13.0	-42.3	
3.306	-27.6	V	3.0	35.8	1.0	-62.4	-13.0	-49.4	
1.652	-14.4	H	3.0	37.4	1.0	-50.8	-13.0	-37.8	
2.479	-27.1	H	3.0	36.4	1.0	-62.4	-13.0	-49.4	
3.306	-27.7	H	3.0	35.8	1.0	-62.5	-13.0	-49.5	
Mid Ch, 836.6MHz									
1.673	-8.5	V	3.0	37.3	1.0	-44.8	-13.0	-31.8	
2.510	-19.9	V	3.0	36.4	1.0	-55.3	-13.0	-42.3	
3.346	-27.5	V	3.0	35.8	1.0	-62.2	-13.0	-49.2	
1.673	-13.2	H	3.0	37.3	1.0	-49.5	-13.0	-36.5	
2.510	-27.2	H	3.0	36.4	1.0	-62.5	-13.0	-49.5	
3.346	-27.3	H	3.0	35.8	1.0	-62.0	-13.0	-49.0	
High Ch, 846.6MHz									
1.693	-10.2	V	3.0	37.3	1.0	-46.5	-13.0	-33.5	
2.539	-17.3	V	3.0	36.3	1.0	-52.6	-13.0	-39.6	
3.386	-27.4	V	3.0	35.7	1.0	-62.1	-13.0	-49.1	
1.693	-6.7	H	3.0	37.3	1.0	-43.0	-13.0	-30.0	
2.539	-2.4	H	3.0	36.3	1.0	-37.7	-13.0	-24.7	
3.386	-22.8	H	3.0	35.7	1.0	-57.5	-13.0	-44.5	

Rev. 03.03.09
Note: No other emissions were detected above the system noise floor.

UL VERIFICATION SERVICES INC. FORM NO: CCSUP4701I
47173 BENICIA STREET, FREMONT, CA 94538, USA TEL: (510) 771-1000 FAX: (510) 661-0888

This report shall not be reproduced except in full, without the written approval of UL Verification Services Inc.

Compliance Certification Services
Above 1GHz High Frequency Substitution Measurement

Company: SAMSUNG
Project #: 14U17788
Date: 05/31/14
Test Engineer: K.Kedida
Configuration: X-pos. EUT w/ ac charger & HS
Mode: EGPRS 1900

Chamber	Pre-amplifer	Filter	Limit
5m Chamber A	T343 8449B	Filter 1	Part 24

Band

GSM1900

EGPRS

f GHz	SG reading (dBm)	Ant. Pol. (H/V)	Distance (m)	Preamp (dB)	Filter (dB)	EIRP (dBm)	Limit (dBm)	Delta (dB)	Notes
Low Ch, 1850MHz									
3.700	-11.3	V	3.0	35.4	1.0	-45.7	-13.0	-32.7	
5.550	-15.3	V	3.0	34.7	1.0	-49.0	-13.0	-36.0	
7.400	-14.7	V	3.0	34.9	1.0	-48.6	-13.0	-35.6	
3.700	-14.5	H	3.0	35.4	1.0	-48.9	-13.0	-35.9	
5.550	-14.3	H	3.0	34.7	1.0	-48.0	-13.0	-35.0	
7.400	-13.0	H	3.0	34.9	1.0	-46.9	-13.0	-33.9	
Mid Ch, 1880.0MHz									
3.760	-9.6	V	3.0	35.3	1.0	-44.0	-13.0	-31.0	
5.640	-13.4	V	3.0	34.7	1.0	-47.1	-13.0	-34.1	
7.520	-13.2	V	3.0	34.9	1.0	-47.1	-13.0	-34.1	
3.760	-15.1	H	3.0	35.3	1.0	-49.5	-13.0	-36.5	
5.640	-14.6	H	3.0	34.7	1.0	-48.3	-13.0	-35.3	
7.520	-12.7	H	3.0	34.9	1.0	-46.7	-13.0	-33.7	
High Ch, 1909.8 MHz									
3.820	-8.6	V	3.0	35.3	1.0	-42.9	-13.0	-29.9	
5.729	-14.0	V	3.0	34.7	1.0	-47.7	-13.0	-34.7	
7.639	-12.2	V	3.0	35.0	1.0	-46.1	-13.0	-33.1	
3.820	-14.3	H	3.0	35.3	1.0	-48.6	-13.0	-35.6	
5.729	-14.0	H	3.0	34.7	1.0	-47.7	-13.0	-34.7	
7.639	-12.1	H	3.0	35.0	1.0	-46.0	-13.0	-33.0	

Rev. 03.03.09

UL VERIFICATION SERVICES INC. FORM NO: CCSUP4701I
47173 BENICIA STREET, FREMONT, CA 94538, USA TEL: (510) 771-1000 FAX: (510) 661-0888

This report shall not be reproduced except in full, without the written approval of UL Verification Services Inc.

Compliance Certification Services
Above 1GHz High Frequency Substitution Measurement

Company: SAMSUNG
Project #: 14U17788
Date: 05/31/14
Test Engineer: K.Kedida
Configuration: X-pos. EUT w/ ac charger & HS
Mode: GPRS 1900

Chamber	Pre-amplifer	Filter	Limit
5m Chamber A	T343 8449B	Filter 1	Part 24

Band

GSM1900

GPRS

f GHz	SG reading (dBm)	Ant. Pol. (H/V)	Distance (m)	Preamp (dB)	Filter (dB)	EIRP (dBm)	Limit (dBm)	Delta (dB)	Notes
Low Ch, 1850MHz									
3.700	-10.9	V	3.0	35.4	1.0	-45.3	-13.0	-32.3	
5.550	-14.9	V	3.0	34.7	1.0	-48.6	-13.0	-35.6	
7.400	-13.7	V	3.0	34.9	1.0	-47.6	-13.0	-34.6	
3.700	-14.8	H	3.0	35.4	1.0	-49.2	-13.0	-36.2	
5.550	-14.9	H	3.0	34.7	1.0	-48.6	-13.0	-35.6	
7.400	-13.2	H	3.0	34.9	1.0	-47.1	-13.0	-34.1	
Mid Ch, 1880.0MHz									
3.760	-9.3	V	3.0	35.3	1.0	-43.6	-13.0	-30.6	
5.640	-13.2	V	3.0	34.7	1.0	-46.9	-13.0	-33.9	
7.520	-12.8	V	3.0	34.9	1.0	-46.8	-13.0	-33.8	
3.760	-16.1	H	3.0	35.3	1.0	-50.4	-13.0	-37.4	
5.640	-14.3	H	3.0	34.7	1.0	-48.1	-13.0	-35.1	
7.520	-11.7	H	3.0	34.9	1.0	-45.7	-13.0	-32.7	
High Ch, 1909.8 MHz									
3.820	-8.5	V	3.0	35.3	1.0	-42.7	-13.0	-29.7	
5.729	-13.4	V	3.0	34.7	1.0	-47.1	-13.0	-34.1	
7.639	-12.0	V	3.0	35.0	1.0	-45.9	-13.0	-32.9	
3.820	-13.4	H	3.0	35.3	1.0	-47.7	-13.0	-34.7	
5.729	-14.1	H	3.0	34.7	1.0	-47.8	-13.0	-34.8	
7.639	-11.6	H	3.0	35.0	1.0	-45.5	-13.0	-32.5	

Rev. 03.03.09

UL VERIFICATION SERVICES INC. FORM NO: CCSUP4701I
47173 BENICIA STREET, FREMONT, CA 94538, USA TEL: (510) 771-1000 FAX: (510) 661-0888

This report shall not be reproduced except in full, without the written approval of UL Verification Services Inc.

Compliance Certification Services
Above 1GHz High Frequency Substitution Measurement

Company: Samsung
Project #: 14U17686
Date: 05/19/14
Test Engineer: O. Stoelting
Configuration: X-pos. EUT with AC charger & HS
Mode: EGPRS 850

Chamber	Pre-amplifer	Filter	Limit
5m Chamber A	T34 8449B	Filter 1	Part 22

Band

GSM850

EGPRS

f GHz	SG reading (dBm)	Ant. Pol. (H/V)	Distance (m)	Preamp (dB)	Filter (dB)	EIRP (dBm)	Limit (dBm)	Delta (dB)	Notes
Low Ch, 824.2MHz									
1.648	-35.4	V	3.0	37.4	1.0	-71.8	-13.0	-58.8	
2.473	-27.4	V	3.0	36.4	1.0	-62.8	-13.0	-49.8	
3.297	-24.9	V	3.0	35.8	1.0	-59.7	-13.0	-46.7	
1.648	-34.6	H	3.0	37.4	1.0	-70.9	-13.0	-57.9	
2.473	-29.6	H	3.0	36.4	1.0	-65.0	-13.0	-52.0	
3.297	-24.7	H	3.0	35.8	1.0	-59.5	-13.0	-46.5	
Mid Ch, 836.6MHz									
1.673	-34.1	V	3.0	37.3	1.0	-70.4	-13.0	-57.4	
2.510	-27.8	V	3.0	36.4	1.0	-63.2	-13.0	-50.2	
3.346	-24.7	V	3.0	35.8	1.0	-59.4	-13.0	-46.4	
1.673	-34.7	H	3.0	37.3	1.0	-71.1	-13.0	-58.1	
2.510	-29.6	H	3.0	36.4	1.0	-64.9	-13.0	-51.9	
3.346	-25.5	H	3.0	35.8	1.0	-60.3	-13.0	-47.3	
High Ch, 848.8MHz									
1.698	-34.1	V	3.0	37.3	1.0	-70.4	-13.0	-57.4	
2.547	-28.5	V	3.0	36.3	1.0	-63.9	-13.0	-50.9	
3.395	-25.3	V	3.0	35.7	1.0	-60.0	-13.0	-47.0	
1.698	-33.9	H	3.0	37.3	1.0	-70.2	-13.0	-57.2	
2.547	-29.0	H	3.0	36.3	1.0	-64.4	-13.0	-51.4	
3.395	-24.5	H	3.0	35.7	1.0	-59.2	-13.0	-46.2	

Rev. 03.03.09
Note: No other emissions were detected above the system noise floor.

UL VERIFICATION SERVICES INC. FORM NO: CCSUP4701I
47173 BENICIA STREET, FREMONT, CA 94538, USA TEL: (510) 771-1000 FAX: (510) 661-0888

This report shall not be reproduced except in full, without the written approval of UL Verification Services Inc.

Compliance Certification Services
Above 1GHz High Frequency Substitution Measurement

Company: SAMSUNG
Project #: 14U17788
Date: 05/31/14
Test Engineer: K.Kedida
Configuration: X-pos. EUT with AC charger & HS
Mode: GPRS 850

Chamber	Pre-amplifer	Filter	Limit
5m Chamber A	T34 8449B	Filter 1	Part 22

Band

GSM850

GPRS

f GHz	SG reading (dBm)	Ant. Pol. (H/V)	Distance (m)	Preamp (dB)	Filter (dB)	EIRP (dBm)	Limit (dBm)	Delta (dB)	Notes
Low Ch, 824.2MHz									
1.648	-34.4	V	3.0	37.4	1.0	-70.8	-13.0	-57.8	
2.473	-27.0	V	3.0	36.4	1.0	-62.4	-13.0	-49.4	
3.297	-24.5	V	3.0	35.8	1.0	-59.3	-13.0	-46.3	
1.648	-34.2	H	3.0	37.4	1.0	-70.5	-13.0	-57.5	
2.473	-29.7	H	3.0	36.4	1.0	-65.1	-13.0	-52.1	
3.297	-24.6	H	3.0	35.8	1.0	-59.4	-13.0	-46.4	
Mid Ch, 836.6MHz									
1.673	-33.3	V	3.0	37.3	1.0	-69.6	-13.0	-56.6	
2.510	-27.2	V	3.0	36.4	1.0	-62.6	-13.0	-49.6	
3.346	-24.2	V	3.0	35.8	1.0	-58.9	-13.0	-45.9	
1.673	-33.9	H	3.0	37.3	1.0	-70.3	-13.0	-57.3	
2.510	-29.1	H	3.0	36.4	1.0	-64.4	-13.0	-51.4	
3.346	-24.9	H	3.0	35.8	1.0	-59.7	-13.0	-46.7	
High Ch, 848.8MHz									
1.698	-33.5	V	3.0	37.3	1.0	-69.8	-13.0	-56.8	
2.547	-27.6	V	3.0	36.3	1.0	-63.0	-13.0	-50.0	
3.395	-24.5	V	3.0	35.7	1.0	-59.2	-13.0	-46.2	
1.698	-33.6	H	3.0	37.3	1.0	-69.9	-13.0	-56.9	
2.547	-28.9	H	3.0	36.3	1.0	-64.3	-13.0	-51.3	
3.395	-25.0	H	3.0	35.7	1.0	-59.7	-13.0	-46.7	

Rev. 03.03.09
Note: No other emissions were detected above the system noise floor.

UL VERIFICATION SERVICES INC. FORM NO: CCSUP4701I
47173 BENICIA STREET, FREMONT, CA 94538, USA TEL: (510) 771-1000 FAX: (510) 661-0888

This report shall not be reproduced except in full, without the written approval of UL Verification Services Inc.