PCTEST ENGINEERING LABORATORY, INC.
6660-B Dobbin Road, Columbia, MD 21045 USA
Tel. +1.410.290.6652 / Fax +1.410.290.6554
http://www.pctestlab.com

SAR COMPLIANCE EVALUATION REPORT

Applicant Name:
Samsung Electronics, Co. Ltd.
18600 Broadwick St.
Rancho Dominguez, CA 90220
United States

Date of Testing:
01/03/11 - 01/06/11
Test Site/Location:
PCTEST Lab, Columbia, MD, USA
Test Report Serial No.:
0Y1101030005.A3L

FCC ID: A3LGTS5830L

APPLICANT: SAMSUNG ELECTRONICS, CO. LTD.

EUT Type:	850/1900 GSM/GPRS/EDGE/WCDMA Phone with Bluetooth and WLAN
Application Type:	Certification
FCC Rule Part(s):	CFR §2.1093; FCC/OET Bulletin 65 Supplement C [June 2001]
FCC Classification:	Licensed Transmitter Held to Ear (PCE) Digital Transmission System (DTS)
Model(s):	GT-S5830L
Tx Frequency:	824.20 - 848.80 MHz (GSM 850) / 1850.20 - 1909.80 MHz (GSM 1900) 826.40 - 846.60 MHz (UMTS V) / 1852.4 - 1907.6 MHz (UMTS II) 2412 - 2462 MHz (WLAN)
Conducted Power:	32.60 dBm GSM 850 / 29.92 dBm GSM 1900 22.99 dBm UMTS V / 22.50 dBm UMTS II 16.42 dBm 2.4 GHz WLAN
Max. SAR Measurement:	0.27 W/kg GSM 850 Head SAR / 1.17 W/kg GSM 850 Body SAR 0.62 W/kg GSM 1900 Head SAR / 1.25 W/kg GSM 1900 Body SAR 0.32 W/kg UMTS V Head SAR / 0.35 W/kg UMTS V Body SAR 0.96 W/kg UMTS II Head SAR / 1.02 W/kg UMTS II Body SAR 0.04 W/kg 2.4 GHz WLAN Head SAR / 0.02 W/kg 2.4 GHz WLAN Body SAR
Test Device Serial No.:	Pre-Production [S/N: FH-293-A]

This wireless portable device has been shown to be capable of compliance for localized specific absorption rate (SAR) for uncontrolled environment/general population exposure limits specified in ANSI/IEEE C95.1-1992 and has been tested in accordance with the measurement procedures specified in FCC/OET Bulletin 65 Supplement C (2001), IEEE 1528-2003 and in applicable Industry Canada Radio Standards Specifications (RSS); for North American frequency bands only.

I attest to the accuracy of data. All measurements reported herein were performed by me or were made under my supervision and are correct to the best of my knowledge and belief. I assume full responsibility for the completeness of these measurements and vouch for the qualifications of all persons taking them. Test results reported herein relate only to the item(s) tested.

PCTEST certifies that no party to this application has been subject to a denial of Federal benefits that includes FCC benefits pursuant to Section 5301 of the Anti-Drug Abuse Act of 1988, 21 U.S.C. 862.

Randy Ortanez
President

ACCREDITED
TESTING LABORATORY
CERTIFICATE #2041.01

© 2011 PCTEST Engineering Laboratory, Inc.

TABLE OF CONTENTS

1 INTRODUCTION 3

2 TEST SITE LOCATION 4

3 SAR MEASUREMENT SETUP 5

4 DASY E-FIELD PROBE SYSTEM 7

5 PROBE CALIBRATION PROCESS 8

6 PHANTOM AND EQUIVALENT TISSUES 9

7 DOSIMETRIC ASSESSMENT & PHANTOM SPECS 10

8 DEFINITION OF REFERENCE POINTS 11

9 TEST CONFIGURATION POSITIONS 12

10 FCC RF EXPOSURE LIMITS 15

11 FCC 3G MEASUREMENT PROCEDURES 16

12 SAR TESTING WITH IEEE 802.11 TRANSMITTERS 18

13 SINGLE TX SAR CONSIDERATIONS 21

14 SYSTEM VERIFICATION 22

15 SAR DATA SUMMARY 25

16 FCC MULTI-TX AND ANTENNA SAR CONSIDERATIONS 33

17 EQUIPMENT LIST 35

18 MEASUREMENT UNCERTAINTIES 36

19 CONCLUSION 37

20 REFERENCES 38

21 SAR TEST SETUP PHOTOGRAPHS 40

© 2011 PCTEST Engineering Laboratory, Inc.

1 INTRODUCTION

The FCC has adopted the guidelines for evaluating the environmental effects of radio frequency (RF) radiation in ET Docket 93-62 on Aug. 6, 1996 to protect the public and workers from the potential hazards of RF emissions due to FCC-regulated portable devices. [1]

The safety limits used for the environmental evaluation measurements are based on the criteria published by the American National Standards Institute (ANSI) for localized specific absorption rate (SAR) in IEEE/ANSI C95.1-1992 Standard for Safety Levels with Respect to Human Exposure to Radio Frequency Electromagnetic Fields, 3 kHz to 300 GHz [3] and Health Canada RF Exposure Guidelines Safety Code 6 [24]. The measurement procedure described in IEEE/ANSI C95.3-2002 Recommended Practice for the Measurement of Potentially Hazardous Electromagnetic Fields - RF and Microwave [4] is used for guidance in measuring the Specific Absorption Rate (SAR) due to the RF radiation exposure from the Equipment Under Test (EUT). These criteria for SAR evaluation are similar to those recommended by the International Committee for Non-Ionizing Radiation Protection (ICNIRP) in Biological Effects and Exposure Criteria for Radiofrequency Electromagnetic Fields," Report No. Vol 74. SAR is a measure of the rate of energy absorption due to exposure to an RF transmitting source. SAR values have been related to threshold levels for potential biological hazards.

1.1 SAR Definition

Specific Absorption Rate is defined as the time derivative (rate) of the incremental energy (dU) absorbed by (dissipated in) an incremental mass (dm) contained in a volume element (dV) of a given density (ρ). It is also defined as the rate of RF energy absorption per unit mass at a point in an absorbing body (see Fig. 1-1).

$$SAR = \frac{d}{dt}\left(\frac{dU}{dm}\right) = \frac{d}{dt}\left(\frac{dU}{\rho\, dv}\right)$$

Figure 1-1
SAR Mathematical Equation

SAR is expressed in units of Watts per Kilogram (W/kg).

$$SAR = \frac{\sigma \cdot E^2}{\rho}$$

where:

σ = conductivity of the tissue-simulating material (S/m)
ρ = mass density of the tissue-simulating material (kg/m^3)
E = Total RMS electric field strength (V/m)

NOTE: The primary factors that control rate of energy absorption were found to be the wavelength of the incident field in relation to the dimensions and geometry of the irradiated organism, the orientation of the organism in relation to the polarity of field vectors, the presence of reflecting surfaces, and whether conductive contact is made by the organism with a ground plane.[6]

© 2011 PCTEST Engineering Laboratory, Inc.

2 TEST SITE LOCATION

2.1 INTRODUCTION

The map at the right shows the location of the PCTEST LABORATORY in Columbia, Maryland. It is in proximity to the FCC Laboratory, the Baltimore-Washington International (BWI) airport, the city of Baltimore and Washington, DC.

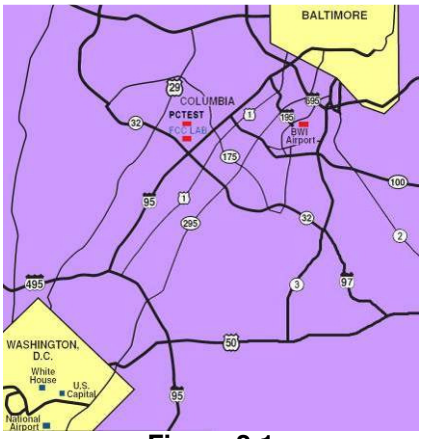

Figure 2-1
Map of the Greater Baltimore and Metropolitan Washington, D.C. area

These measurement tests were conducted at the PCTEST Engineering Laboratory, Inc. facility in New Concept Business Park, Guilford Industrial Park, Columbia, Maryland. The site address is 6660-B Dobbin Road, Columbia, MD 21045. The test site is one of the highest points in the Columbia area with an elevation of 390 feet above mean sea level. The site coordinates are 39° 11'15" N latitude and 76° 49' 38" W longitude. The facility is 1.5 miles north of the FCC laboratory, and the ambient signal and ambient signal strength are approximately equal to those of the FCC laboratory. There are no FM or TV transmitters within 15 miles of the site. The detailed description of the measurement facility was found to be in compliance with the requirements of § 2.948 according to ANSI C63.4 on January 27, 2006 and Industry Canada.

2.2 Test Facility / Accreditations:

Measurements were performed at an independent accredited PCTEST Engineering Lab located in Columbia, MD 21045, U.S.A.

- PCTEST Lab is accredited to ISO 17025-2005 by the American Association for Laboratory Accreditation (A2LA) in Specific Absorption Rate (SAR) testing, Hearing-Aid Compatibility (HAC), Battery Safety, CTIA Test Plans, and wireless testing for FCC and Industry Canada Rules.
- PCTEST Lab is accredited to ISO 17025 by U.S. National Institute of Standards and Technology (NIST) under the National Voluntary Laboratory Accreditation Program (NVLAP Lab code: 100431-0) in EMC, FCC and Telecommunications.
- PCTEST facility is an FCC registered (PCTEST Reg. No. 90864) test facility with the site description report on file and has met all the requirements specified in Section 2.948 of the FCC Rules and Industry Canada (IC-2451).
- PCTEST Lab is a recognized U.S. Conformity Assessment Body (CAB) in EMC and R&TTE (n.b. 0982) under the U.S.-EU Mutual Recognition Agreement (MRA).
- PCTEST TCB is a Telecommunication Certification Body (TCB) accredited to ISO/IEC Guide 65 by the American National Standards Institute (ANSI) in all scopes of FCC Rules and all Industry Canada Standards (RSS).

- PCTEST facility is an IC registered (IC-2451) test laboratory with the site description on file at Industry Canada.
- PCTEST is a CTIA Authorized Test Laboratory (CATL) for AMPS and CDMA, and EvDO mobile phones.
- PCTEST is a CTIA Authorized Test Laboratory (CATL) for Over-the-Air (OTA) Antenna Performance testing for AMPS, CDMA, GSM, GPRS, EGPRS, UMTS (W-CDMA), CDMA 1xEVDO Data, CDMA 1xRTT Data

© 2011 PCTEST Engineering Laboratory, Inc.

3 SAR MEASUREMENT SETUP

3.1 Robotic System

Measurements are performed using the DASY4 automated dosimetric assessment system. The DASY4 is made by Schmid & Partner Engineering AG (SPEAG) in Zurich, Switzerland and consists of a high precision robotics system (Staubli), robot controller, desktop computer, near-field probe, probe alignment sensor, and the SAM phantom containing the head or body equivalent material. The robot is a six-axis industrial robot, performing precise movements to position the probe to the location (points) of maximum electromagnetic field (EMF) (see Figure 3-1).

3.2 System Hardware

A cell controller system contains the power supply, robot controller, teach pendant (Joystick), and a remote control used to drive the robot motors. The PC consists of the SAR Measurement Software DASY4, A/D interface card, monitor, mouse, and keyboard. The Staubli Robot is connected to the cell controller to allow software manipulation of the robot. A data acquisition electronic (DAE) circuit that performs the signal amplification, signal multiplexing, A/D conversion, offset measurements, mechanical surface detection, collision detection, etc. is connected to the Electro-optical coupler (EOC). The EOC performs the conversion from the optical into digital electric signal from the DAE and transfers data to the PC card.

3.3 System Electronics

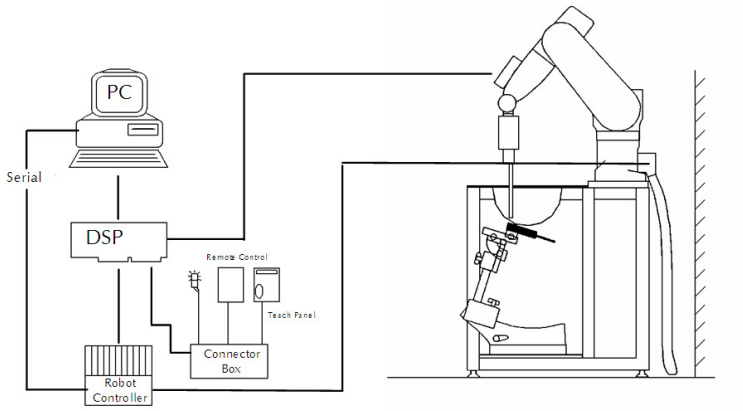

Figure 3-1
SAR Measurement System Setup

The DAE consists of a highly sensitive electrometer-grade auto-zeroing preamplifier, a channel and gain-switching multiplexer, a fast 16 bit AD-converter and a command decoder and control logic unit. Transmission to the PC-card is accomplished through an optical downlink for data and status information and an optical uplink for commands and clock lines. The mechanical probe mounting device includes two different sensor systems for frontal and sidewise probe contacts. They are also used for mechanical surface detection and probe collision detection. The robot uses its own controller with a built in VME-bus computer.

© 2011 PCTEST Engineering Laboratory, Inc.

3.4 Automated Test System Specifications

Test Software: SPEAG DASY4 version 4.7 Measurement Software
Robot: Stäubli Unimation Corp. Robot RX60L
Repeatability: 0.02 mm
No. of Axes: 6

Data Acquisition Electronic System (DAE)

Data Converter
Features: Signal Amplifier, multiplexer, A/D converter & control logic
Software: SEMCAD software
Connecting Lines: Optical Downlink for data and status info
Optical upload for commands and clock

PC Interface Card
Function: Link to DAE
16-bit A/D converter for surface detection system
Two Serial & Ethernet link to robotics
Direct emergency stop output for robot

Phantom
Type: SAM Twin Phantom (V4.0)
Shell Material: Composite
Thickness: 2.0 ± 0.2 mm

Figure 3-2
SAR Measurement System

© 2011 PCTEST Engineering Laboratory, Inc.

4 DASY E-FIELD PROBE SYSTEM

4.1 Probe Measurement System

Figure 4-1
SAR System

The SAR measurements were conducted with the dosimetric probe designed in the classical triangular configuration (see Figure 4-3) and optimized for dosimetric evaluation [9]. The probe is constructed using the thick film technique; with printed resistive lines on ceramic substrates. The probe is equipped with an optical multi-fiber line ending at the front of the probe tip. It is connected to the EOC box on the robot arm and provides an automatic detection of the phantom surface. Half of the fibers are connected to a pulsed infrared transmitter, the other half to a synchronized receiver. As the probe approaches the surface, the reflection from the surface produces a coupling from the transmitting to the receiving fibers. This reflection increases first during the approach, reaches maximum and then decreases. If the probe is flatly touching the surface, the coupling is zero. The distance of the coupling maximum to the surface is independent of the surface reflectivity and largely independent of the surface to probe angle. The DASY4 software reads the reflection during a software approach and looks for the maximum using a 2nd order curve fitting (see Figure 5-1). The approach is stopped at reaching the maximum.

4.2 Probe Specifications

Model(s):	ES3DV2, ES3DV3, EX3DV4
Frequency Range:	10 MHz – 6.0 GHz (EX3DV4) 10 MHz – 4 GHz (ES3DV3)
Calibration:	In head and body simulating tissue at Frequencies from 300 up to 6000MHz
Linearity:	± 0.2 dB (30 MHz to 6 GHz) for EX3DV4 ± 0.2 dB (30 MHz to 4 GHz) for ES3DV3
Dynamic Range:	10 mW/kg – 100 W/kg
Probe Length:	330 mm
Probe Tip Length:	20 mm
Body Diameter:	12 mm
Tip Diameter:	2.5 mm (3.9mm for ES3DV3)
Tip-Center:	1 mm (2.0 mm for ES3DV3)
Application:	SAR Dosimetry Testing Compliance tests of mobile phones Dosimetry in strong gradient fields

Figure 4-2
Near-Field Probe

Figure 4-3
Triangular Probe Configuration

© 2011 PCTEST Engineering Laboratory, Inc.

5 PROBE CALIBRATION PROCESS

5.1 Dosimetric Assessment Procedure

Each E-Probe/Probe Amplifier combination has unique calibration parameters. A TEM cell calibration procedure is conducted to determine the proper amplifier settings to enter in the probe parameters. The amplifier settings are determined for a given frequency by subjecting the probe to a known E-field density (1 mW/cm^2) using an RF Signal generator, TEM cell, and RF Power Meter.

5.2 Free Space Assessment

The free space E-field from amplified probe outputs is determined in a test chamber. This calibration can be performed in a TEM cell if the frequency is below 1 GHz and in a waveguide or other methodologies above 1 GHz for free space. For the free space calibration, the probe is placed in the volumetric center of the cavity and at the proper orientation with the field. The probe is rotated 360 degrees until the three channels show the maximum reading. The power density readings equates to 1 mW/cm^2.

5.3 Temperature Assessment

E-field temperature correlation calibration is performed in a flat phantom filled with the appropriate simulated head tissue. The E-field in the medium correlates with the temperature rise in the dielectric medium. For temperature correlation calibration a RF transparent thermistor-based temperature probe is used in conjunction with the E-field probe.

$$SAR = C\frac{\Delta T}{\Delta t}$$

where:

Δt = exposure time (30 seconds),
C = heat capacity of tissue (brain or muscle),
ΔT = temperature increase due to RF exposure.

$$SAR = \frac{|E|^2 \cdot \sigma}{\rho}$$

where:

σ = simulated tissue conductivity,
ρ = Tissue density (1.25 g/cm^3 for brain tissue)

SAR is proportional to $\Delta T/\Delta t$, the initial rate of tissue heating, before thermal diffusion takes place. The electric field in the simulated tissue can be used to estimate SAR by equating the thermally derived SAR to that with the E- field component.

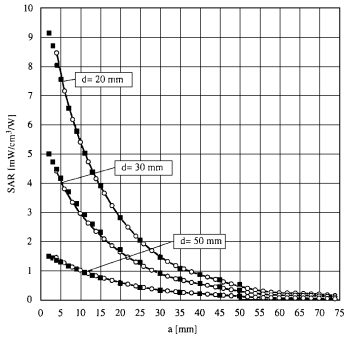

Figure 5-1 E-Field and Temperature measurements at 900MHz [9]

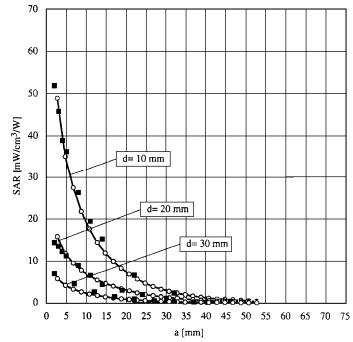

Figure 5-2 E-Field and temperature measurements at 1.9GHz [9]

© 2011 PCTEST Engineering Laboratory, Inc.

6 PHANTOM AND EQUIVALENT TISSUES

6.1 SAM Phantoms

Figure 6-1
SAM Phantoms

The SAM Twin Phantom V4.0 is constructed of a fiberglass shell integrated in a table. The shape of the shell is based on data from an anatomical study designed to represent the 90th percentile of the population [12][13]. The phantom enables the dosimetric evaluation of SAR for both left and right handed handset usage, as well as body-worn usage using the flat phantom region. Reference markings on the Phantom allow the complete setup of all predefined phantom positions and measurement grids by manually teaching three points in the robot. The shell phantom has a 2mm shell thickness (except the ear region where shell thickness increases to 6 mm).

6.2 Tissue Simulating Mixture Characterization

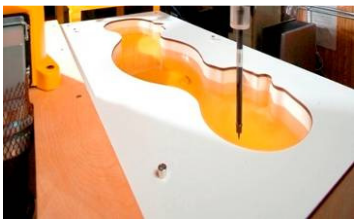

Figure 6-2
SAM Phantom with Simulating Tissue

The mixture is characterized to obtain proper dielectric constant (permittivity) and conductivity of the tissue of interest. The tissue dielectric parameters recommended in IEEE 1528 and IEC 62209 have been used as targets for the compositions, and are to match within 5%, per the FCC recommendations.

Table 6-1
Composition of the Tissue Equivalent Matter

Frequency (MHz)	835	835	1900	1900	2450	2450
Tissue	Head	Body	Head	Body	Head	Body
Ingredients (% by weight)						
Bactericide	0.1	0.1				
DGBE			44.92	29.44	7.99	26.7
HEC	1	1				
NaCl	1.45	0.94	0.18	0.39	0.16	0.1
Sucrose	57	44.9				
Triton X-100					19.97	
Water	40.45	53.06	54.9	70.16	71.88	73.2

© 2011 PCTEST Engineering Laboratory, Inc.

7 DOSIMETRIC ASSESSMENT & PHANTOM SPECS

7.1 Measurement Procedure

The evaluation was performed using the following procedure:

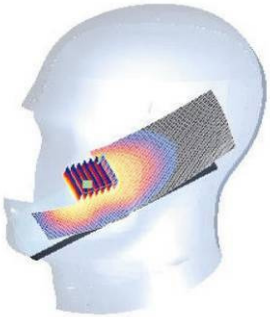

Figure 7-1
Sample SAR Area Scan

1. The SAR distribution at the exposed side of the head was measured at a distance no greater than 5.0 mm from the inner surface of the shell. The area covered the entire dimension of the head and the horizontal grid spacing was 15mm x 15mm.
2. The point SAR measurement was taken at the maximum SAR region determined from Step 1 to enable the monitoring of SAR fluctuations/drifts during testing the 1 gram cube. This fixed point was measured and used as a reference value.
3. Based on the area scan data, the area of the maximum absorption was determined by spline interpolation. Around this point, a volume of 32mm x 32mm x 30mm (fine resolution volume scan, zoom scan) was assessed by measuring 5 x 5 x 7 points. On this basis of this data set, the spatial peak SAR value was evaluated with the following procedure (see references or the DASY manual for more details):
   a. The data was extrapolated to the surface of the outer-shell of the phantom. The combined distance extrapolated was the combined distance from the center of the dipoles 2.7mm away from the tip of the probe housing plus the 1.2 mm distance between the surface and the lowest measuring point. The extrapolation was based on a least-squares algorithm. A polynomial of the fourth order was calculated through the points in the z-axis (normal to the phantom shell).
   b. After the maximum interpolated values were calculated between the points in the cube, the SAR was averaged over the spatial volume (1g or 10g) using a 3D-Spline interpolation algorithm. The 3D-spline is composed of three one-dimensional splines with the “Not a knot” condition (in x, y, and z directions). The volume was then integrated with the trapezoidal algorithm. One thousand points (10 x 10 x 10) were obtained through interpolation, in order to calculate the averaged SAR.
   c. All neighboring volumes were evaluated until no neighboring volume with a higher average value was found.
4. The SAR reference value, at the same location as step 2, was re-measured after the zoom scan was complete. If the value deviated by more than 5%, the evaluation was repeated.
5. For 5 GHz testing finer resolution zoom scans were preformed as specified by FCC SAR Measurement Requirements for 3 – 6 GHz, KDB pub 865664. The 5 GHz zoom scan requires a minimum volume of 24mm x 24mm x 20mm and 7 x 7 x 11 points.

7.2 Specific Anthropomorphic Mannequin (SAM) Specifications

The phantom for handset SAR assessment testing is a low-loss dielectric shell, with shape and dimensions derived from the anthropometric data of the 90th percentile adult male head dimensions as tabulated by the US Army. The SAM Twin Phantom shell is bisected along the mid-sagittal plane into right and left halves (see Figure 7-2). The perimeter sidewalls of each phantom halves are extended to allow filling with liquid to a depth that is sufficient to minimize reflections from the upper surface. The liquid depth is maintained at a minimum depth of 15 cm.

Figure 7-2
SAM Twin Phantom Shell

© 2011 PCTEST Engineering Laboratory, Inc.

8 DEFINITION OF REFERENCE POINTS

8.1 EAR REFERENCE POINT

Figure 8-1 shows the front, back and side views of the SAM Twin Phantom. The point "M" is the reference point for the center of the mouth, "LE" is the left ear reference point (ERP), and "RE" is the right ERP. The ERP is 15mm posterior to the entrance to the ear canal (EEC) along the B-M line (Back-Mouth), as shown in Figure 8-1. The plane passing through the two ear canals and M is defined as the Reference Plane. The line N-F (Neck-Front) is perpendicular to the reference plane and passing through the RE (or LE) is called the Reference Pivoting Line (see Figure 8-2
Front, back and side view of SAM Twin PhantomFigure 8-2). Line B-M is perpendicular to the N-F line. Both N-F and B-M lines are marked on the external phantom shell to facilitate handset positioning [5].

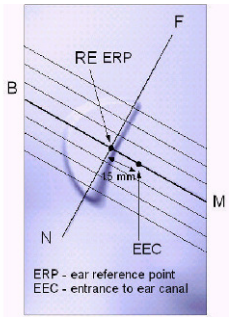

Figure 8-1
Close-Up Side view of ERP

8.2 HANDSET REFERENCE POINTS

Two imaginary lines on the handset were established: the vertical centerline and the horizontal line. The test device was placed in a normal operating position with the "test device reference point" located along the "vertical centerline" on the front of the device aligned to the "ear reference point" (See Figure 8-3). The "test device reference point" was than located at the same level as the center of the ear reference point. The test device was positioned so that the "vertical centerline" was bisecting the front surface of the handset at it's top and bottom edges, positioning the "ear reference point" on the outer surface of the both the left and right head phantoms on the ear reference point.

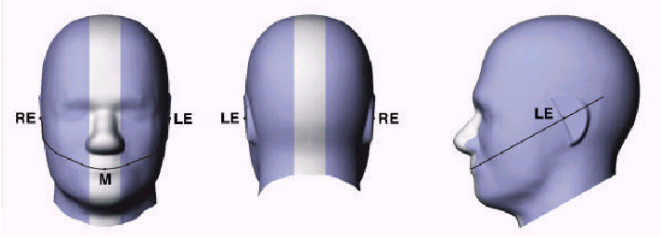

Figure 8-2
Front, back and side view of SAM Twin Phantom

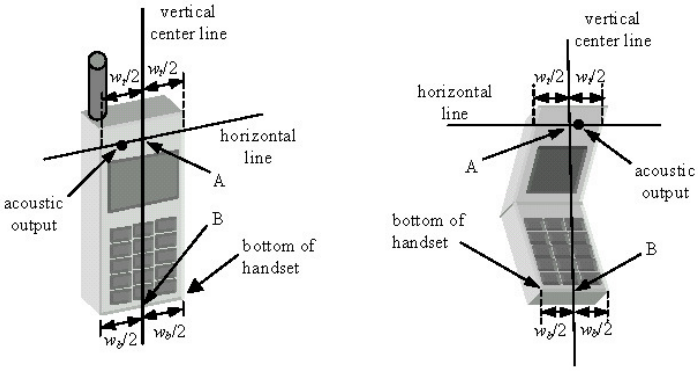

Figure 8-3
Handset Vertical Center & Horizontal Line Reference Points

© 2011 PCTEST Engineering Laboratory, Inc.

9 TEST CONFIGURATION POSITIONS

9.1 Device Holder

The DASY device holder has been made out of low-loss POM material having the following dielectric parameters: relative permittivity ε = 3 and loss tangent δ = 0.02.

9.2 Positioning for Cheek/Touch

1. The test device was positioned with the handset close to the surface of the phantom such that point A is on the (virtual) extension of the line passing through points RE and LE on the phantom (see Figure 9-1), such that the plane defined by the vertical center line and the horizontal line of the phone is approximately parallel to the sagittal plane of the phantom.

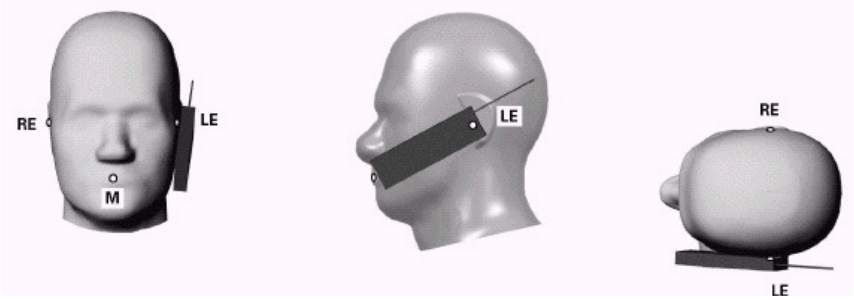

Figure 9-1 Front, Side and Top View of Cheek/Touch Position

2. The handset was translated towards the phantom along the line passing through RE & LE until the handset touches the ear.
3. While maintaining the handset in this plane, the handset was rotated around the LE-RE line until the vertical centerline was in the plane normal to MB-NF including the line MB (reference plane).
4. The phone was hen rotated around the vertical centerline until the phone (horizontal line) was symmetrical was respect to the line NF.
5. While maintaining the vertical centerline in the reference plane, keeping point A on the line passing through RE and LE, and maintaining the phone contact with the ear, the handset was rotated about the line NF until any point on the handset made contact with a phantom point below the ear (cheek) (See Figure 9-2).

9.3 Positioning for Ear / 15º Tilt

With the test device aligned in the “Cheek/Touch Position”:

1. While maintaining the orientation of the phone, the phone was retracted parallel to the reference plane far enough to enable a rotation of the phone by 15degree.
2. The phone was then rotated around the horizontal line by 15 degree.
3. While maintaining the orientation of the phone, the phone was moved parallel to the reference plane until any part of the phone touches the head. (In this position, point A was located on the line RE-LE). The tilted position is obtained when the contact is on the pinna. If the contact was at any location other than the pinna, the angle of the phone would then be reduced. The tilted position was obtained when any part of the phone was in contact of the ear as well as a second part of the phone was in contact with the head (see Figure 9-2).

© 2011 PCTEST Engineering Laboratory, Inc.

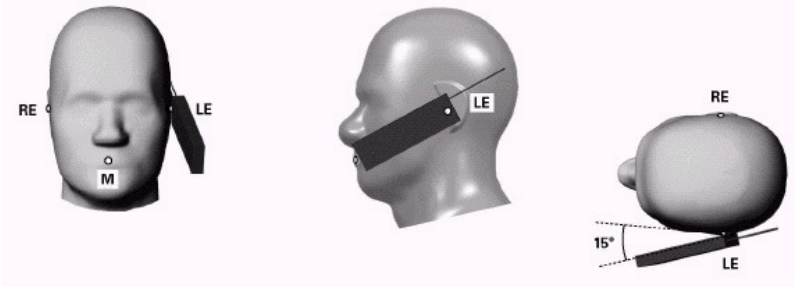

Figure 9-2 Front, Side and Top View of Ear/15º Tilt Position

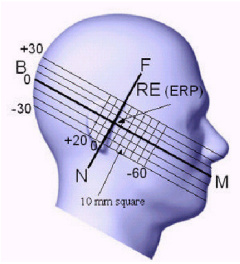

Figure 9-3
Side view w/ relevant markings

Figure 9-4 Body SAR Sample Photo
(Not Actual EUT)

9.4 SAR Evaluations near the Mouth/Jaw Regions of the SAM Phantom

Antennas located near the bottom of a phone may require SAR measurements around the mouth and jaw regions of the SAM head phantom. This typically applies to clam-shell style phones that are generally longer in the unfolded normal use positions or to certain older style long rectangular phones. It has been known for some time that there are SAR measurement difficulties in these regions of the SAM phantom. SAR probes are calibrated in tissue equivalent liquids with sufficient separation between the probe sensors and nearby physical boundaries to ensure scattering does not affect probe calibration. When the probe tip is moved into tight regions with multiple boundaries surrounding its sensors, probe calibration and measurement accuracy can become questionable. In addition, these measurement locations often require a probe to be tilted at steep angles, where it may no longer comply with calibration requirements and measurement protocols, or satisfy the required measurement uncertainty. In some situations it is not feasible to tilt the probe or rotate the phantom, as suggested by measurement standards, to conduct these measurements.

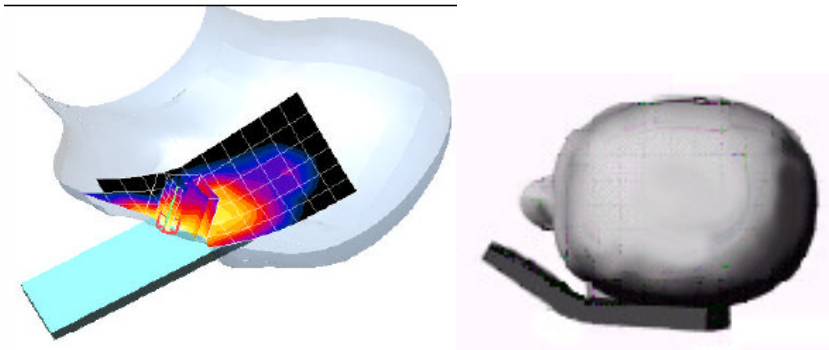

Figure 9-5
SAR Scans near the Jaw/Mouth

In order to ensure there is sufficient conservativeness for ensuring compliance until practical solutions are available, additional measurement considerations are necessary to address these technical difficulties. When measurements are required near the mouth, nose, jaw or similar tight regions of the SAM phantom,

© 2011 PCTEST Engineering Laboratory, Inc.

area or zoom scans are often unable to fully enclose the peak SAR location as required by IEEE 1528 and Supplement C, due to probe orientation and positioning difficulties. Even when limited measurements are possible, the test results could be questionable due to probe calibration and measurement uncertainty issues. Under these circumstances, the following procedures apply, adopted from the FCC guidance on SAR handsets document publication 648474. The SAR required in these regions of SAM should be measured using a flat phantom. **Rectangular shaped phones** should be positioned with its bottom edge positioned from the flat phantom with the same distance provided by the cheek touching position using SAM. The ear reference point (ERP, as defined for SAM) of the phone should be positioned ½ cm from the flat phantom shell. **Clam-shell phones** should be positioned with the hinge against a smooth edge of the flat phantom where the upper half of the phone is unfolded and extended beyond the phantom side wall. The lower half of the phone is secured in the test device holder at a fixed distance below the flat phantom determined by the minimum separation along the lower edge of the phone in the cheek touching position using SAM. Any case with substantial variation in separation distance along the lower edge of a clam shell is discussed with the FCC for best-to-use methodology.

The flat phantom data should allow test results to be compared uniformly across measurement systems, until suitable solutions are available in measurement standards to address certain probe calibration and positioning issues, due to implementation differences between horizontal and upright SAM configurations. These flat phantom procedures are only applicable for stand-alone SAR evaluation in tight regions of the SAM phantom, where measurement is not feasible or test results can be questionable due to probe calibration and accessibility issues. Details on device positioning and photos showing how separation distances are determined are included in the SAR report Photographs. SAR for other regions of the head must be evaluated using SAM; therefore, a phone with antennas at different locations may require flat and SAM phantom evaluation for the different antennas.

9.5 Body Holster /Belt Clip Configurations

Body-worn operating configurations are tested with the belt-clips and holsters attached to the device and positioned against a flat phantom in a normal use configuration (see Figure 9-4). A device with a headset output is tested with a headset connected to the device.

Accessories for Body-worn operation configurations are divided into two categories: those that do not contain metallic components and those that do contain metallic components. When multiple accessories that do not contain metallic components are supplied with the device, the device is tested with only the accessory that dictates the closest spacing to the body. Then multiple accessories that contain metallic components are tested with the device with each accessory. If multiple accessories share an identical metallic component (i.e. the same metallic belt-clip used with different holsters with no other metallic components) only the accessory that dictates the closest spacing to the body is tested.

Body-worn accessories may not always be supplied or available as options for some devices intended to be authorized for body-worn use. In this case, a test configuration with a separation distance between the back of the device and the flat phantom is used. Test position spacing was documented. Transmitters that are designed to operate in front of a person's face, as in push-to-talk configurations, are tested for SAR compliance with the front of the device positioned to face the flat phantom in head fluid. For devices that are carried next to the body such as a shoulder, waist or chest-worn transmitters, SAR compliance is tested with the accessories, including headsets and microphones, attached to the device and positioned against a flat phantom in a normal use configuration.

© 2011 PCTEST Engineering Laboratory, Inc.

10 FCC RF EXPOSURE LIMITS

10.1 Uncontrolled Environment

UNCONTROLLED ENVIRONMENTS are defined as locations where there is the exposure of individuals who have no knowledge or control of their exposure. The general population/uncontrolled exposure limits are applicable to situations in which the general public may be exposed or in which persons who are exposed as a consequence of their employment may not be made fully aware of the potential for exposure or cannot exercise control over their exposure. Members of the general public would come under this category when exposure is not employment-related; for example, in the case of a wireless transmitter that exposes persons in its vicinity.

10.2 Controlled Environment

CONTROLLED ENVIRONMENTS are defined as locations where there is exposure that may be incurred by persons who are aware of the potential for exposure, (i.e. as a result of employment or occupation). In general, occupational/controlled exposure limits are applicable to situations in which persons are exposed as a consequence of their employment, who have been made fully aware of the potential for exposure and can exercise control over their exposure. This exposure category is also applicable when the exposure is of a transient nature due to incidental passage through a location where the exposure levels may be higher than the general population/uncontrolled limits, but the exposed person is fully aware of the potential for exposure and can exercise control over his or her exposure by leaving the area or by some other appropriate means.

Table 10-1
SAR Human Exposure Specified in ANSI/IEEE C95.1-1992 and Health Canada Safety Code 6

HUMAN EXPOSURE LIMITS		
	UNCONTROLLED ENVIRONMENT *General Population* (W/kg) or (mW/g)	CONTROLLED ENVIRONMENT *Occupational* (W/kg) or (mW/g)
SPATIAL PEAK SAR Brain	1.6	8.0
SPATIAL AVERAGE SAR Whole Body	0.08	0.4
SPATIAL PEAK SAR Hands, Feet, Ankles, Wrists	4.0	20

1. The Spatial Peak value of the SAR averaged over any 1 gram of tissue (defined as a tissue volume in the shape of a cube) and over the appropriate averaging time.
2. The Spatial Average value of the SAR averaged over the whole body.
3. The Spatial Peak value of the SAR averaged over any 10 grams of tissue (defined as a tissue volume in the shape of a cube) and over the appropriate averaging time.

© 2011 PCTEST Engineering Laboratory, Inc.

11 FCC 3G MEASUREMENT PROCEDURES

Power measurements were performed using a base station simulator under digital average power.

11.1 Procedures Used to Establish RF Signal for SAR

The device was placed into a simulated call using a base station simulator in a shielded chamber. Such test signals offer a consistent means for testing SAR and are recommended for evaluating SAR [4]. SAR measurements were taken with a fully charged battery. In order to verify that the device was tested and maintained at full power, it was configured with the base station simulator. The SAR measurement software calculates a reference point at the start and end of the test to check for power drifts. If SAR deviations of more than 5% occurred, the tests were repeated.

11.2 SAR Measurement Conditions for UMTS

11.2.1 Output Power Verification

Maximum output power is verified on the High, Middle and Low channels according to the general descriptions in section 5.2 of 3GPP TS 34.121, using the appropriate RMC or AMR with TPC (transmit power control) set to all “1s”.

11.2.2 Head SAR Measurements

SAR for head exposure configurations is measured using the 12.2 kbps RMC with TPC bits configured to all “1s”. SAR in AMR configurations is not required when the maximum average output of each RF channel for 12.2 kbps AMR is less than ¼ dB higher than that measured in 12.2 kbps RMC. Otherwise, SAR is measured on the maximum output channel in 12.2 AMR with a 3.4 kbps SRB (signaling radio bearer) using the exposure configuration that results in the highest SAR for that RF channel in 12.2 RMC.

11.2.3 Body SAR Measurements

SAR for body exposure configurations is measured using the 12.2 kbps RMC with the TPC bits all “1s”.

11.2.4 Handsets with HSDPA

Body SAR is not required for handsets with HSDPA capabilities when the maximum average output of each RF channel with HSDPA active is less than ¼ dB higher than that measured without HSDPA using 12.2 kbps RMC and the maximum SAR for 12.2 kbps RMC is ≤ 75% of the SAR limit. Otherwise, SAR is measured for HSDPA, using an FRC with H-Set 1 in Sub-test 1 and a 12.2 kbps RMC configured in Test Loop Mode 1, using the highest body SAR configuration in 12.2 kbps RMC without HSDPA, on the maximum output channel with the body exposure configuration that results in the highest SAR in 12.2 kbps RMC for that RF channel.

© 2011 PCTEST Engineering Laboratory, Inc.

11.3 RF Conducted Powers

11.3.1 GSM Conducted Powers

		RF Conducted Power Table				
		Voice	*GPRS Data*			
Band	**Channel**	**GSM [dBm] CS (1 Slot)**	**GPRS [dBm] 1 Tx Slot**	**GPRS [dBm] 2 Tx Slot**	**GPRS [dBm] 3 Tx Slot**	**GPRS [dBm] 4 Tx Slot**
Cellular	128	32.60	32.52	32.02	30.14	28.07
	190	32.47	32.44	31.95	30.07	28.01
	251	32.51	32.45	32.03	30.05	28.03
PCS	512	29.48	29.27	29.26	27.27	25.35
	661	29.77	29.51	29.50	27.39	25.49
	810	29.92	29.67	29.73	27.51	25.59

GSM Class: B
GPRS Multislot class: 12 (max 4 Tx Uplink slots)
EDGE Multislot class: 12 (Rx Only)
DTM Multislot Class: N/A

11.3.2 HSDPA Conducted Powers

3GPP Release Version	Mode	3GPP 34.121 Subtest	Cellular Band [dBm]			PCS Band [dBm]			βc	βd	MPR
			4132	4183	4233	9262	9400	9538			
99	WCDMA	12.2 kbps RMC	22.98	22.89	**22.99**	22.10	22.38	**22.50**	-	-	-
99		12.2 kbps AMR	22.98	22.83	22.85	22.08	22.29	22.42	-	-	-
5	HSDPA	Subtest 1	**22.83**	22.75	22.81	22.03	22.34	22.42	2	15	0
5		Subtest 2	22.73	22.64	22.68	22.01	22.27	**22.45**	11	15	0
5		Subtest 3	22.24	22.14	22.26	21.63	21.92	22.06	15	8	0.5
5		Subtest 4	22.23	22.14	22.24	21.57	21.85	22.03	15	4	0.5

Figure 11-1
Power Measurement Setup

© 2011 PCTEST Engineering Laboratory, Inc.

12 SAR TESTING WITH IEEE 802.11 TRANSMITTERS

Normal network operating configurations are not suitable for measuring the SAR of 802.11 a/b/g transmitters. Unpredictable fluctuations in network traffic and antenna diversity conditions can introduce undesirable variations in SAR results. The SAR for these devices should be measured using chipset based test mode software to ensure the results are consistent and reliable.

12.1 General Device Setup

Chipset based test mode software is hardware dependent and generally varies among manufacturers. The device operating parameters established in test mode for SAR measurements must be identical to those programmed in production units, including output power levels, amplifier gain settings and other RF performance tuning parameters. The test frequencies should correspond to actual channel frequencies defined for domestic use. SAR for devices with switched diversity should be measured with only one antenna transmitting at a time during each SAR measurement, according to a fixed modulation and data rate. The same data pattern should be used for all measurements.

12.2 Frequency Channel Configurations [27]

802.11 a/b/g and 4.9 GHz operating modes are tested independently according to the service requirements in each frequency band. 802.11 b/g modes are tested on channels 1, 6 and 11. 802.11a is tested for UNII operations on channels 36 and 48 in the 5.15-5.25 GHz band; channels 52 and 64 in the 5.25-5.35 GHz band; channels 104, 116, 124 and 136 in the 5.470-5.725 GHz band; and channels 149 and 161 in the 5.8 GHz band. When 5.8 GHz §15.247 is also available, channels 149, 157 and 165 should be tested instead of the UNII channels. 4.9 GHz is tested on channels 1, 10 and 5 or 6, whichever has the higher output power, for 5 MHz channels; channels 11, 15 and 19 for 10 MHz channels; and channels 21 and 25 for 20 MHz channels. These are referred to as the "default test channels". 802.11g mode was evaluated only if the output power was 0.25 dB higher than the 802.11b mode.

Table 12-1
802.11 Test Channels per FCC Requirements

Mode		GHz	Channel	Turbo Channel	"Default Test Channels"			
					§15.247		UNII	
					802.11b	802.11g		
802.11 b/g		2.412	1		√	∇		
		2.437	6	6	√	∇		
		2.462	11		√	∇		
802.11a	UNII	5.18	36				√	
		5.20	40	42 (5.21 GHz)				*
		5.22	44					*
		5.24	48	50 (5.25 GHz)			√	
		5.26	52				√	
		5.28	56	58 (5.29 GHz)				*
		5.30	60					*
		5.32	64				√	
		5.500	100	Unknown				*
		5.520	104				√	
		5.540	108					*
		5.560	112					*
		5.580	116				√	
		5.600	120					*
		5.620	124				√	
		5.640	128					*
		5.660	132					*
		5.680	136				√	
		5.700	140					*
	UNII or §15.247	5.745	149		√		√	
		5.765	153	152 (5.76 GHz)		*		*
		5.785	157		√			*
		5.805	161	160 (5.80 GHz)		*	√	
	§15.247	5.825	165		√			

© 2011 PCTEST Engineering Laboratory, Inc.

Table 12-2
IEEE 802.11b Average RF Power

Freq [MHz]	Channel	Data Rate [Mbps]	Average Power (dBm)
2412	1	1	15.21
		2	15.17
		5.5	15.34
		11	15.38
2437	6	1	15.54
		2	15.52
		5.5	15.7
		11	15.52
2462	11	1	16
		2	16.07
		5.5	16.23
		11	16.15

Table 12-3
IEEE 802.11g Average RF Power

Freq [MHz]	Channel	Data Rate [Mbps]	Measured Average Power [dBm]
2412	1	6	13.49
		9	13.31
		12	13.32
		18	13.47
		24	13.76
		36	14.31
		48	14.39
		54	14.31
2437	6	6	13.62
		9	13.57
		12	13.55
		18	13.71
		24	13.78
		36	14.43
		48	14.52
		54	14.47
2462	11	6	13.76
		9	13.82
		12	13.84
		18	13.87
		24	13.98
		36	14.68
		48	14.8
		54	14.64

© 2011 PCTEST Engineering Laboratory, Inc.

Table 12-4
IEEE 802.11n Average RF Power

Freq [MHz]	Channel	MCS Index	Data Rate [Mbps]	Measured Average Power [dBm]
2412	1	0	6.5/7.2	10.49
		1	13/14.4	10.41
		2	19.5/21.7	10.59
		3	26/28.9	8.92
		4	39/43.3	10.31
		5	52/57.8	10.41
		6	58.5/65	10.48
		7	65/72.2	10.46
2437	6	0	6.5/7.2	10.76
		1	13/14.4	10.71
		2	19.5/21.7	10.69
		3	26/28.9	9.26
		4	39/43.3	10.72
		5	52/57.8	10.68
		6	58.5/65	10.76
		7	65/72.2	10.74
2462	11	0	6.5/7.2	10.87
		1	13/14.4	10.93
		2	19.5/21.7	11.01
		3	26/28.9	9.64
		4	39/43.3	10.97
		5	52/57.8	11.06
		6	58.5/65	10.96
		7	65/72.2	11.08

Figure 12-1
Power Measurement Setup

© 2011 PCTEST Engineering Laboratory, Inc.

13 SINGLE TX SAR CONSIDERATIONS

13.1 SAR Test Configurations

Table 13-1
Mobile Hotspot Sides for SAR Testing

Mobile Hotspot Side for SAR Testing						
Mode	**Back**	**Front**	**Right**	**Left**	**Top**	**Bottom**
850 GPRS	Yes	Yes	Yes	Yes	No	Yes
1900 GPRS	Yes	Yes	Yes	Yes	No	Yes
850 WCDMA	Yes	Yes	Yes	Yes	No	Yes
1900 WCDMA	Yes	Yes	Yes	Yes	No	Yes
2.4 GHz WIFI	Yes	Yes	No	Yes	Yes	No

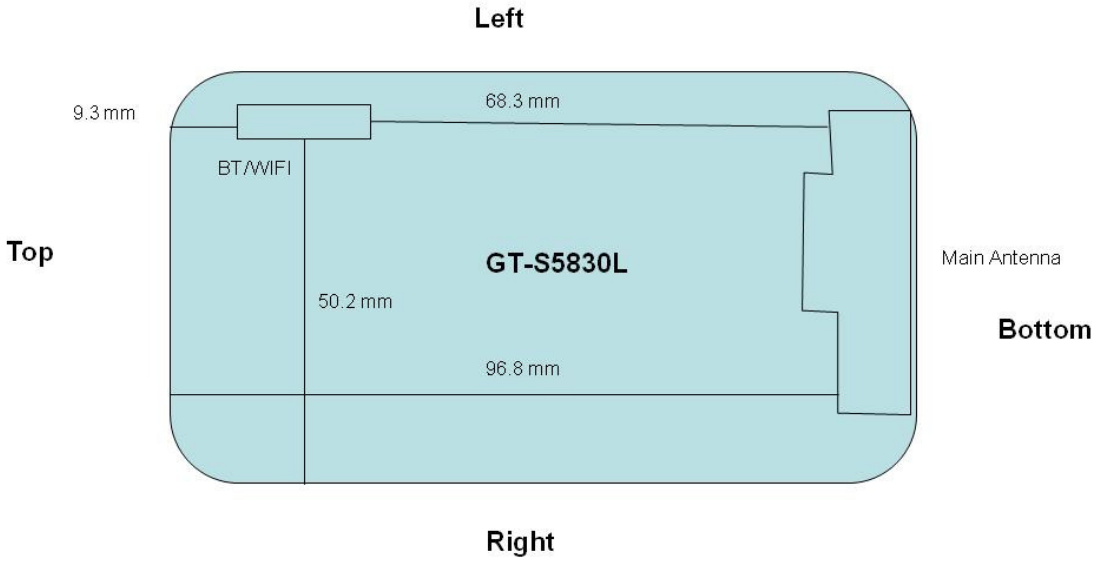

Figure 13-1
Identification of Sides for SAR Testing

Note: Per Oct 2010 TCB FCC Workshop, the edges with antennas within 2.5 cm are required to be evaluated for SAR. See Figure 13-1Figure 3-1 for distances of the actual device.

© 2011 PCTEST Engineering Laboratory, Inc.

14 SYSTEM VERIFICATION

14.1 Tissue Verification

Table 14-1
Measured Tissue Properties

Calibrated for Tests Performed	Tissue Type	Measured Frequency (MHz)	Measured Conductivity, σ (S/m)	Measured Dielectric Constant, ε	TARGET Conductivity, σ (S/m)	TARGET Dielectric Constant, ε	% dev σ	% dev ε
01/03/2011	835H	820	0.882	41.79	0.898	41.571	-1.78%	0.53%
		835	0.902	41.67	0.900	41.500	0.22%	0.41%
		850	0.914	41.42	0.916	41.500	-0.22%	-0.19%
01/05/2011	835H	820	0.905	43.47	0.898	41.571	0.78%	4.57%
		835	0.926	43.32	0.900	41.500	2.89%	4.39%
		850	0.937	43.12	0.916	41.500	2.29%	3.90%
01/03/2011	835B	820	0.951	54.18	0.969	55.284	-1.86%	-2.00%
		835	0.967	54.03	0.970	55.200	-0.31%	-2.12%
		850	0.980	53.89	0.988	55.154	-0.81%	-2.29%
01/04/2011	1900H	1850	1.348	41.30	1.400	40.000	-3.71%	3.25%
		1880	1.381	41.13	1.400	40.000	-1.36%	2.83%
		1910	1.432	40.87	1.400	40.000	2.29%	2.17%
01/04/2011	1900B	1850	1.449	52.46	1.520	53.300	-4.67%	-1.58%
		1880	1.490	52.28	1.520	53.300	-1.97%	-1.91%
		1910	1.515	52.20	1.520	53.300	-0.33%	-2.06%
01/05/2011	2450H	2401	1.790	39.82	1.758	39.298	1.82%	1.33%
		2450	1.852	39.56	1.800	39.200	2.89%	0.92%
		2499	1.899	39.30	1.852	39.135	2.54%	0.42%
01/06/2011	2450B	2401	1.955	50.61	1.903	52.765	2.73%	-4.08%
		2450	2.008	50.32	1.950	52.700	2.97%	-4.52%
		2499	2.063	50.07	2.019	52.638	2.18%	-4.88%

Note: KDB Publication 450824 was ensured to be applied for probe calibration frequencies greater than or equal to 50 MHz of the DUT frequencies.

The above measured tissue parameters were used in the DASY software to perform interpolation via the DASY software to determine actual dielectric parameters at the test frequencies (per IEEE 1528 6.6.1.2). The SAR test plots may slightly differ from the table above since the DASY software rounds to three significant digits.

© 2011 PCTEST Engineering Laboratory, Inc.

14.2 Measurement Procedure for Tissue verification

1) The network analyzer and probe system was configured and calibrated.
2) The probe was immersed in the sample which was placed in a nonmetallic container. Trapped air bubbles beneath the flange were minimized by placing the probe at a slight angle.
3) The complex admittance with respect to the probe aperture was measured
4) The complex relative permittivity , for example from the below equation (Pournaropoulos and Misra):

$$Y = \frac{j2\omega\varepsilon_r\varepsilon_0}{[\ln(b/a)]^2}\int_a^b\int_a^b\int_0^\pi \cos\phi' \frac{\exp\left[-j\omega r(\mu_0\varepsilon_r'\varepsilon_0)^{1/2}\right]}{r} d\phi' d\rho' d\rho$$

where Y is the admittance of the probe in contact with the sample, the primed and unprimed coordinates refer to source and observation points, respectively, $r^2 = \rho^2 + \rho'^2 - 2\rho\rho'\cos\phi'$, ω is the angular frequency, and $j = \sqrt{-1}$.

14.3 Justification for Extended SAR Dipole Calibrations

Usage of SAR dipoles calibrated less than 2 years ago but more than 1 year ago were confirmed in maintaining return loss (< - 20 dB, within 20% of prior calibration) and impedance (within 5 ohm from prior calibration) requirements per extended calibrations in KDB Publication 450824:

D835V2 SN: 4d047				
Date of Measurement	Return Loss (dB)	**Δ %**	Impedance (Ω)	**ΔΩ**
1/19/2009	-28.4		50.9	
8/19/2010	-25.6	-10%	48.9	-2

D835V2 SN: 4d026				
Date of Measurement	Return Loss (dB)	**Δ %**	Impedance (Ω)	**ΔΩ**
8/24/2009	-22.5		51	
8/19/2010	-21.4	-5%	50.1	-0.9

D1900V2 SN:5d080				
Date of Measurement	Return Loss (dB)	**Δ %**	Impedance (Ω)	**ΔΩ**
8/18/2009	-24.3		50	
8/19/2010	-22.4	**-7.8%**	51	**1.0**

D2450V2 SN: 719				
Date of Measurement	Return Loss (dB)	**Δ %**	Impedance (Ω)	**ΔΩ**
8/27/2009	-28.6		53.4	
8/19/2010	-27.5	**-3.8%**	51	**-2.4**

© 2011 PCTEST Engineering Laboratory, Inc.

14.4 Test System Verification

Prior to assessment, the system is verified to ±10% of the manufacturer SAR measurement on the reference dipole at the time of calibration.

Table 14-2
System Verification Results

System Verification TARGET & MEASURED										
Date:	Amb. Temp (°C)	Liquid Temp (°C)	Input Power (W)	Tissue Frequency (MHz)	Dipole SN	Tissue Type	Measured SAR_{1g} (W/kg)	1 W Target SAR_{1g} (W/kg)	1 W Normalized SAR_{1g} (W/kg)	Deviation (%)
01/04/2011	22.4	21.8	0.100	1900	5d080	Head	4.01	40.100	40.10	0.00%
01/04/2011	23.8	22.4	0.025	1900	5d080	Body	1.02	40.500	40.80	0.74%
01/05/2011	23.3	21.9	0.0158	2450	719	Head	0.802	53.500	50.76	-5.12%
01/03/2011	23.6	21.8	0.100	835	4d026	Head	0.958	9.460	9.58	1.27%
01/05/2011	24.1	22.9	0.063	835	4d047	Head	0.616	9.700	9.7778	0.80%
01/06/2011	24.1	22.3	0.025	2450	719	Body	1.36	51.400	54.40	5.84%

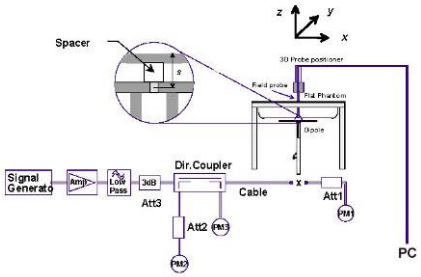

Figure 14-1
System Verification Setup Diagram

Figure 14-2
System Verification Setup Photo

© 2011 PCTEST Engineering Laboratory, Inc.

15 SAR DATA SUMMARY

Table 15-1
GSM 850 Head SAR Results

MEASUREMENT RESULTS							
FREQUENCY		Mode/Band	C_Power[dBm]		Side	Test Position	SAR (1g)
MHz	Ch.		Start	End			(W/kg)
836.60	190	GSM 850	32.47	32.46	Right	Touch	**0.252**
836.60	190	GSM 850	32.47	32.46	Right	Tilt	**0.170**
836.60	190	GSM 850	32.47	32.47	Left	Touch	**0.268**
836.60	190	GSM 850	32.47	32.47	Left	Tilt	**0.162**
ANSI / IEEE C95.1 1992 - SAFETY LIMIT Spatial Peak Uncontrolled Exposure/General Population					**Brain 1.6 W/kg (mW/g)** averaged over 1 gram		

Notes:

1. The test data reported are the worst-case SAR value with the position set in a typical configuration. Test procedures used were according to FCC/OET Bulletin 65, Supplement C [June 2001].
2. All modes of operation were investigated, and worst-case results are reported.
3. Batteries are fully charged for all readings. Standard battery was used.
4. Tissue parameters and temperatures are listed on the SAR plots.
5. Liquid tissue depth was at least 15.0 cm.
6. Justification for reduced test configurations: Per FCC/OET Bulletin 65 Supplement C (June 2001) and Public Notice DA-02-1438, if the SAR measured at the middle channel for each test configuration (left, right, cheek/touch, tilt/ear, extended and retracted) is at least 3.0 dB lower than the SAR limit, testing at the high and low channels is optional for such test configuration(s).

© 2011 PCTEST Engineering Laboratory, Inc.

Table 15-2
GSM 1900 Head SAR Results

MEASUREMENT RESULTS							
FREQUENCY		Mode/Band	C_Power[dBm]		Side	Test Position	SAR (1g)
MHz	Ch.		Start	End			(W/kg)
1880.00	661	GSM 1900	29.77	29.79	Right	Touch	**0.617**
1880.00	661	GSM 1900	29.77	29.79	Right	Tilt	**0.229**
1880.00	661	GSM 1900	29.77	29.75	Left	Touch	**0.440**
1880.00	661	GSM 1900	29.77	29.81	Left	Tilt	**0.236**
ANSI / IEEE C95.1 1992 - SAFETY LIMIT Spatial Peak Uncontrolled Exposure/General					**Brain 1.6 W/kg (mW/g)** averaged over 1 gram		

Notes:

1. The test data reported are the worst-case SAR value with the position set in a typical configuration. Test procedures used were according to FCC/OET Bulletin 65, Supplement C [June 2001].
2. All modes of operation were investigated, and worst-case results are reported.
3. Batteries are fully charged for all readings. Standard battery was used.
4. Tissue parameters and temperatures are listed on the SAR plots.
5. Liquid tissue depth was at least 15.0 cm.
6. Justification for reduced test configurations: Per FCC/OET Bulletin 65 Supplement C (June 2001) and Public Notice DA-02-1438, if the SAR measured at the middle channel for each test configuration (left, right, cheek/touch, tilt/ear, extended and retracted) is at least 3.0 dB lower than the SAR limit, testing at the high and low channels is optional for such test configuration(s).

© 2011 PCTEST Engineering Laboratory, Inc.

Table 15-3
UMTS V Head SAR Results

MEASUREMENT RESULTS							
FREQUENCY		Mode/Band	C_Power[dBm]		Side	Test Position	SAR (1g)
MHz	Ch.		Start	End			(W/kg)
836.60	4183	UMTS V	22.89	22.90	Right	Touch	**0.324**
836.60	4183	UMTS V	22.89	22.90	Right	Tilt	**0.184**
836.60	4183	UMTS V	22.89	22.92	Left	Touch	**0.306**
836.60	4183	UMTS V	22.89	22.90	Left	Tilt	**0.172**
ANSI / IEEE C95.1 1992 - SAFETY LIMIT Spatial Peak Uncontrolled Exposure/General Population					**Brain 1.6 W/kg (mW/g)** averaged over 1 gram		

Notes:

1. The test data reported are the worst-case SAR value with the position set in a typical configuration. Test procedures used were according to FCC/OET Bulletin 65, Supplement C [June 2001].
2. All modes of operation were investigated, and worst-case results are reported.
3. Batteries are fully charged for all readings. Standard battery was used.
4. Tissue parameters and temperatures are listed on the SAR plots.
5. Liquid tissue depth was at least 15.0 cm.
6. Justification for reduced test configurations: Per FCC/OET Bulletin 65 Supplement C (June 2001) and Public Notice DA-02-1438, if the SAR measured at the middle channel for each test configuration (left, right, cheek/touch, tilt/ear, extended and retracted) is at least 3.0 dB lower than the SAR limit, testing at the high and low channels is optional for such test configuration(s).
7. WCDMA mode was tested under RMC 12.2 kbps with HSDPA Inactive.

© 2011 PCTEST Engineering Laboratory, Inc.

Table 15-4
UMTS II Head SAR Results

MEASUREMENT RESULTS							
FREQUENCY		Mode	C_Power[dBm]		Side	Test Position	SAR (1g)
MHz	Ch.		Start	End			(W/kg)
1852.40	9262	UMTS II	22.10	22.09	Right	Touch	0.877
1880.00	9400	UMTS II	22.38	22.39	Right	Touch	0.923
1907.60	9538	UMTS II	22.50	22.53	Right	Touch	**0.959**
1880.00	9400	UMTS II	22.38	22.41	Right	Tilt	**0.342**
1880.00	9400	UMTS II	22.38	22.40	Left	Touch	**0.645**
1880.00	9400	UMTS II	22.38	22.37	Left	Tilt	**0.340**
ANSI / IEEE C95.1 1992 - SAFETY LIMIT Spatial Peak Uncontrolled Exposure/General Population					**Brain 1.6 W/kg (mW/g)** averaged over 1 gram		

Notes:

1. The test data reported are the worst-case SAR value with the position set in a typical configuration. Test procedures used were according to FCC/OET Bulletin 65, Supplement C [June 2001].
2. All modes of operation were investigated, and worst-case results are reported.
3. Batteries are fully charged for all readings. Standard battery was used.
4. Tissue parameters and temperatures are listed on the SAR plots.
5. Liquid tissue depth was at least 15.0 cm.
6. Justification for reduced test configurations: Per FCC/OET Bulletin 65 Supplement C (June 2001) and Public Notice DA-02-1438, if the SAR measured at the middle channel for each test configuration (left, right, cheek/touch, tilt/ear, extended and retracted) is at least 3.0 dB lower than the SAR limit, testing at the high and low channels is optional for such test configuration(s).
7. WCDMA mode was tested under RMC 12.2 kbps with HSDPA Inactive.

© 2011 PCTEST Engineering Laboratory, Inc.

Table 15-5
2.4 GHz WLAN Head SAR Results

MEASUREMENT RESULTS									
FREQUENCY		Mode	Service	C_Power[dBm]		Side	Test Position	Data Rate (Mbps)	SAR (1g)
MHz	Ch.			Start	End				(W/kg)
2412	1	IEEE 802.11b	DSSS	16.42	16.50	Right	Touch	1	**0.020**
2412	1	IEEE 802.11b	DSSS	16.42	16.47	Right	Tilt	1	**0.020**
2412	1	IEEE 802.11b	DSSS	16.42	16.50	Left	Touch	1	**0.039**
2412	1	IEEE 802.11b	DSSS	16.42	16.46	Left	Tilt	1	**0.018**
ANSI / IEEE C95.1 1992 - SAFETY LIMIT Spatial Peak Uncontrolled Exposure/General Population						**Brain 1.6 W/kg (mW/g)** averaged over 1 gram			

Notes:

1. The test data reported are the worst-case SAR value with the position set in a typical configuration. Test procedures used were according to FCC/OET Bulletin 65, Supplement C [June 2001].
2. All modes of operation were investigated, and worst-case results are reported.
3. Batteries are fully charged for all readings. Standard battery was used.
4. Tissue parameters and temperatures are listed on the SAR plots.
5. Liquid tissue depth was at least 15.0 cm.
6. Justification for reduced test configurations for WIFI channels per KDB Publication 248227 and April 2010 FCC/TCB Meeting Notes: Highest average RF output power channel for the lowest data rate were selected for SAR evaluation. Other IEEE 802.11 modes (including 802.11n) were not investigated since the average output powers were not greater than 0.25 dB than that of the corresponding channel in the lowest data rate IEEE 802.11b mode.
7. WLAN transmission was verified using a spectrum analyzer.

© 2011 PCTEST Engineering Laboratory, Inc.

Table 15-6
GSM Hotspot Body SAR Results

MEASUREMENT RESULTS									
FREQUENCY		Mode	Service	C_Power[dBm]		Spacing	# of GPRS Slots	Side	SAR (1g)
MHz	Ch.			Start	End				(W/kg)
824.20	128	GSM 850	GPRS	32.02	32.12	1.0 cm	2	back	**0.424**
836.60	190	GSM 850	GPRS	31.95	32.03	1.0 cm	2	back	**0.851**
848.80	251	GSM 850	GPRS	32.03	31.98	1.0 cm	2	back	**1.170**
836.60	190	GSM 850	GPRS	30.07	30.06	1.0 cm	3	back	**0.757**
836.60	190	GSM 850	GPRS	31.95	32.00	1.0 cm	2	front	**0.576**
836.60	190	GSM 850	GPRS	31.95	31.95	1.0 cm	2	bottom	**0.035**
836.60	190	GSM 850	GPRS	31.95	32.04	1.0 cm	2	right	**0.357**
836.60	190	GSM 850	GPRS	31.95	32.00	1.0 cm	2	left	**0.331**
1880.00	661	GSM 1900	GPRS	29.50	29.48	1.0 cm	2	Back	**0.706**
1850.20	512	GSM 1900	GPRS	29.26	29.29	1.0 cm	2	Front	**0.790**
1880.00	661	GSM 1900	GPRS	29.50	29.50	1.0 cm	2	Front	**1.010**
1909.80	810	GSM 1900	GPRS	29.73	29.72	1.0 cm	2	Front	**1.180**
1850.20	512	GSM 1900	GPRS	29.26	29.27	1.0 cm	2	Bottom	**0.902**
1880.00	661	GSM 1900	GPRS	29.50	29.49	1.0 cm	2	Bottom	**1.080**
1909.80	810	GSM 1900	GPRS	29.73	29.71	1.0 cm	2	Bottom	**1.250**
1880.00	661	GSM 1900	GPRS	29.50	29.50	1.0 cm	2	Right	**0.257**
1880.00	661	GSM 1900	GPRS	29.50	29.59	1.0 cm	2	Left	**0.166**
ANSI / IEEE C95.1 1992 - SAFETY LIMIT Spatial Peak Uncontrolled Exposure/General Population						**Body 1.6 W/kg (mW/g)** averaged over 1 gram			

Notes:

1. The test data reported are the worst-case SAR value with the position set in a typical configuration. Test procedures used were according to FCC/OET Bulletin 65, Supplement C [June 2001].
2. All modes of operation were investigated, and worst-case results are reported.
3. Tissue parameters and temperatures are listed on the SAR plots.
4. Batteries are fully charged for all readings. Standard battery was used.
5. Liquid tissue depth was at least 15.0 cm.
6. Device was tested using a fixed spacing.
7. Justification for reduced test configurations per KDB Publication 941225: The source-based time-averaged output power was evaluated for all multi-slot operations. In addition to the worst-case reported, all source-based time-averaged powers within 10% of the worst-case were additionally included in the evaluation.
8. Justification for reduced test configurations: Per FCC/OET Bulletin 65 Supplement C (June 2001) and Public Notice DA-02-1438, if the SAR measured at the middle channel for each test configuration is at least 3.0 dB lower than the SAR limit, testing at the high and low channels is optional for such test configuration(s).
9. Top Edge was not required since the antenna distance from the edge was greater than 2.5 cm per Oct 2010 TCB Workshop guidance (see Section 13.1).

© 2011 PCTEST Engineering Laboratory, Inc.

Table 15-7
UMTS Hotspot Body SAR Results

MEASUREMENT RESULTS								
FREQUENCY		Mode	Service	C_Power[dBm]		Spacing	Side	SAR (1g)
MHz	Ch.			Start	End			(W/kg)
836.60	4183	UMTS V	RMC	22.89	22.93	1.0 cm	back	**0.346**
836.60	4183	UMTS V	RMC	22.89	22.91	1.0 cm	front	**0.239**
836.60	4183	UMTS V	RMC	22.89	22.88	1.0 cm	bottom	**0.016**
836.60	4183	UMTS V	RMC	22.89	22.87	1.0 cm	right	**0.146**
836.60	4183	UMTS V	RMC	22.89	22.86	1.0 cm	left	**0.137**
1880.00	9400	UMTS II	RMC	22.38	22.37	1.0 cm	Back	**0.553**
1880.00	9400	UMTS II	RMC	22.38	22.37	1.0 cm	Front	**0.754**
1852.40	9262	UMTS II	RMC	22.10	22.10	1.0 cm	Bottom	**0.898**
1880.00	9400	UMTS II	RMC	22.38	22.40	1.0 cm	Bottom	**1.020**
1907.60	9538	UMTS II	RMC	22.50	22.49	1.0 cm	Bottom	**0.989**
1880.00	9400	UMTS II	RMC	22.38	22.42	1.0 cm	Right	**0.179**
1880.00	9400	UMTS II	RMC	22.38	22.39	1.0 cm	Left	**0.115**
ANSI / IEEE C95.1 1992 - SAFETY LIMIT Spatial Peak Uncontrolled Exposure/General Population						**Body 1.6 W/kg (mW/g)** averaged over 1 gram		

Notes:

1. The test data reported are the worst-case SAR value with the position set in a typical configuration. Test procedures used were according to FCC/OET Bulletin 65, Supplement C [June 2001].
2. All modes of operation were investigated, and worst-case results are reported.
3. Tissue parameters and temperatures are listed on the SAR plots.
4. Batteries are fully charged for all readings. Standard battery was used.
5. Liquid tissue depth was at least 15.0 cm.
6. Device was tested using a fixed spacing.
7. WCDMA mode in Body SAR was tested under RMC 12.2 kbps with HSDPA Inactive.
8. Justification for reduced test configurations: Per FCC/OET Bulletin 65 Supplement C (June 2001) and Public Notice DA-02-1438, if the SAR measured at the middle channel for each test configuration is at least 3.0 dB lower than the SAR limit, testing at the high and low channels is optional for such test configuration(s).
9. Top Edge was not required since the antenna distance from the edge was greater than 2.5 cm per Oct 2010 TCB Workshop guidance (see Section 13.1).

© 2011 PCTEST Engineering Laboratory, Inc.

Table 15-8
2.4 GHz Hotspot Body SAR Results

MEASUREMENT RESULTS									
FREQUENCY		Mode	Service	C_Power[dBm]		Spacing	Data Rate (Mbps)	Side	SAR
MHz	Ch.			Start	End				(W/kg)
2412	1	IEEE 802.11b	DSSS	16.42	16.46	1.0 cm	1	back	0.023
2412	1	IEEE 802.11b	DSSS	16.42	16.47	1.0 cm	1	front	0.009
2412	1	IEEE 802.11b	DSSS	16.42	16.45	1.0 cm	1	top	0.011
2412	1	IEEE 802.11b	DSSS	16.42	16.51	1.0 cm	1	left	0.005
2412	1	IEEE 802.11b	DSSS	16.42	16.49	1.0 cm	1	right	0.021
ANSI / IEEE C95.1 1992 - SAFETY LIMIT Spatial Peak Uncontrolled Exposure/General Population						**Body 1.6 W/kg (mW/g)** averaged over 1 gram			

Notes:

1. The test data reported are the worst-case SAR value with the position set in a typical configuration. Test procedures used were according to FCC/OET Bulletin 65, Supplement C [June 2001].
2. All modes of operation were investigated, and worst-case results are reported.
3. Batteries are fully charged for all readings. Standard battery was used.
4. Tissue parameters and temperatures are listed on the SAR plots.
5. Liquid tissue depth is was at least 15.0 cm.
6. Device was tested using a fixed spacing.
7. Justification for reduced test configurations for WIFI channels per KDB Publication 248227 and April 2010 FCC/TCB Meeting Notes: Highest average RF output power channel for the lowest data rate were selected for SAR evaluation. Other IEEE 802.11 modes (including 802.11n) were not investigated since the average output powers were not greater than 0.25 dB than that of the corresponding channel in the lowest data rate IEEE 802.11b mode.
8. WLAN transmission was verified using a spectrum analyzer.
9. Bottom Edge was not required since the antenna distance from the edge was greater than 2.5 cm per Oct 2010 TCB Workshop guidance (see Section 13.1). Right Edge was also not required but additionally tested.

© 2011 PCTEST Engineering Laboratory, Inc.

16 FCC MULTI-TX AND ANTENNA SAR CONSIDERATIONS

16.1 Introduction

The following procedures adopted from "FCC SAR Considerations for Cell Phones with Multiple Transmitters" FCC KDB Publication 648474 are applicable to handsets with built-in unlicensed transmitters such as 802.11a/b/g and Bluetooth devices which may simultaneously transmit with the licensed transmitter.

16.2 FCC Power Tables & Conditions

	2.45	5.15 - 5.35	5.47 - 5.85	GHz
P_{Ref}	12	6	5	mW
Device output power should be rounded to the nearest mW to compare with values specified in this table.				

Figure 16-1
Output Power Thresholds for Unlicensed Transmitters

	Individual Transmitter	Simultaneous Transmission
Licensed Transmitters	Routine evaluation required	SAR not required: Unlicensed only ○ when stand-alone 1-g SAR is not required and antenna is ≥ 5 cm from other antennas Licensed & Unlicensed ○ when the sum of the 1-g SAR is < 1.6 W/kg for all simultaneous transmitting antennas ○ when SAR to peak location separation ratio of simultaneous transmitting antenna pair is < 0.3 SAR required: Licensed & Unlicensed antenna pairs with SAR to peak location separation ratio ≥ 0.3; test is only required for the configuration that results in the highest SAR in stand-alone configuration for each wireless mode and exposure condition Note: simultaneous transmission exposure conditions for head and body can be different for different style phones; therefore, different test requirements may apply
Unlicensed Transmitters	When there is no simultaneous transmission – ○ output ≤ 60/f: SAR not required ○ output > 60/f: stand-alone SAR required When there is simultaneous transmission – Stand-alone SAR not required when ○ output ≤ $2 \cdot P_{Ref}$ and antenna is ≥ 5.0 cm from other antennas ○ output ≤ P_{Ref} and antenna is ≥ 2.5 cm from other antennas ○ output ≤ P_{Ref} and antenna is < 2.5 cm from other antennas, each with either output power ≤ P_{Ref} or 1-g SAR < 1.2 W/kg Otherwise stand-alone SAR is required When stand-alone SAR is required ○ test SAR on highest output channel for each wireless mode and exposure condition ○ if SAR for highest output channel is > 50% of SAR limit, evaluate all channels according to normal procedures	

Figure 16-2
SAR Evaluation Requirements for Multiple Transmitter Handsets

16.3 Multiple Antenna/Transmission Information for GT-S5830L

RF Conducted Power of Bluetooth Tx is 3.837 mW. RF Conducted Power of WLAN is 46.34 mW.

16.4 Conclusion

Based on the output power, antenna separation distance and the Body SAR of the dominant transmitter, a stand-alone Bluetooth SAR test is not required while for WLAN it is required.

© 2011 PCTEST Engineering Laboratory, Inc.

Table 16-1
Simultaneous Transmission Summation for Held to Ear Voice Call with WIFI Data Scenario

Simult Tx	Configuration	2G/3G SAR (W/kg)	WIFI SAR (W/kg)	ΣSAR (W/kg)
Head SAR	Right Cheek	0.959	0.020	**0.979**
	Right Tilt	0.342	0.020	**0.362**
	Left Cheek	0.645	0.039	**0.684**
	Left Tilt	0.340	0.178	**0.518**

Table 16-2
Simultaneous Transmission Summation WIFI Data Scenario

Simult Tx	Configuration	2G/3G SAR (W/kg)	WIFI SAR (W/kg)	ΣSAR (W/kg)
Body SAR	Back	1.170	0.023	**1.193**
	Front	1.180	0.009	**1.189**
	Bottom	1.250	-	**1.250**
	Top	-	0.011	**0.011**
	Right	0.357	0.021	**0.378**
	Left	0.331	0.005	**0.336**

The above tables represent the worst-case simultaneous transmission scenarios possible with this device. Note: "-" SAR results shown in the table are zero for summation purposes. SAR was not required to be measured due to exclusions mentioned in Section 13.1.

The above numerical summed SAR was below the SAR limit. Therefore, the above analysis is sufficient to determine that simultaneous transmission cases will not exceed the SAR limit. Therefore, no volumetric SAR summation is required since the numerical sums are below the limit.

© 2011 PCTEST Engineering Laboratory, Inc.

17 EQUIPMENT LIST

Manufacturer	Model	Description	Cal Date	Cal Interval	Cal Due	Serial Number
Agilent	85070B	Dielectric Probe Kit	8/22/2010	Annual	8/22/2011	US33020316
Agilent	8648D	(9kHz-4GHz) Signal Generator	10/11/2010	Annual	10/11/2011	3613A00315
Agilent	8753E	(30kHz-6GHz) Network Analyzer	3/31/2010	Annual	3/31/2011	JP38020182
Agilent	E5515C	Wireless Communications Test Set	10/11/2010	Annual	10/11/2011	GB46110872
Agilent	E5515C	Wireless Communications Test Set	10/11/2010	Annual	10/11/2011	GB46310798
Agilent	E5515C	Wireless Communications Test Set	8/12/2010	Annual	8/12/2011	GB41450275
Agilent	E8257D	(250kHz-20GHz) Signal Generator	3/30/2010	Annual	3/30/2011	MY45470194
Gigatronics	80701A	(0.05-18GHz) Power Sensor	10/11/2010	Annual	10/11/2011	1833460
Gigatronics	8651A	Universal Power Meter	10/11/2010	Annual	10/11/2011	8650319
Index SAR	IXTL-010	Dielectric Measurement Kit	N/A		N/A	N/A
Index SAR	IXTL-030	30MM TEM line for 6 GHz	N/A		N/A	N/A
Rohde & Schwarz	CMU200	Base Station Simulator	11/11/2010	Annual	11/11/2011	836371/0079
Rohde & Schwarz	CMU200	Base Station Simulator	6/21/2010	Annual	6/21/2011	833855/0010
SPEAG	D1450V2	1450 MHz SAR Dipole	5/20/2009	Biennial	5/20/2011	1025
SPEAG	D1765V2	1765 MHz SAR Dipole	5/19/2009	Biennial	5/19/2011	1008
SPEAG	D1900V2	1900 MHz SAR Dipole	1/20/2009	Biennial	1/20/2011	502
SPEAG	D1900V2	1900 MHz SAR Dipole	8/18/2009	Biennial	8/18/2011	5d080
SPEAG	D2450V2	2450 MHz SAR Dipole	8/27/2009	Biennial	8/27/2011	719
SPEAG	D2450V2	2450 MHz SAR Dipole	1/8/2009	Biennial	1/8/2011	797
SPEAG	D2600V2	2600 MHz SAR Dipole	8/12/2009	Biennial	8/12/2011	1004
SPEAG	D5GHzV2	5 GHz SAR Dipole	8/19/2009	Biennial	8/19/2011	1007
SPEAG	D5GHzV2	5 GHz SAR Dipole	1/15/2009	Biennial	1/15/2011	1057
SPEAG	D835V2	835 MHz SAR Dipole	1/19/2009	Biennial	1/19/2011	4d047
SPEAG	D835V2	835 MHz SAR Dipole	8/24/2009	Biennial	8/24/2011	4d026
SPEAG	DAE3	Dasy Data Acquisition Electronics	11/18/2010	Annual	11/18/2011	455
SPEAG	DAE4	Dasy Data Acquisition Electronics	3/22/2010	Annual	3/22/2011	704
SPEAG	DAE4	Dasy Data Acquisition Electronics	4/21/2010	Annual	4/21/2011	665
SPEAG	DAE4	Dasy Data Acquisition Electronics	1/22/2010	Annual	1/22/2011	649
SPEAG	ES3DV2	SAR Probe	9/21/2010	Annual	9/21/2011	3022
SPEAG	EX3DV4	SAR Probe	8/19/2010	Annual	8/19/2011	3561
SPEAG	EX3DV4	SAR Probe	1/26/2010	Annual	1/26/2011	3550
SPEAG	DAE4	Dasy Data Acquisition Electronics	7/8/2010	Annual	7/8/2011	859
SPEAG	D750V3	750 MHz Dipole	8/19/2010	Biennial	8/19/2012	1003
SPEAG	ES3DV3	SAR Probe	3/16/2010	Annual	3/16/2011	3213
SPEAG	ES3DV3	SAR Probe	4/20/2010	Annual	4/20/2011	3209
Rohde & Schwarz	SMIQ03B	Signal Generator	4/1/2010	Annual	4/1/2011	DE27259
SPEAG	D1640V2	1640 MHz Dipole	8/17/2010	Biennial	8/17/2012	321
Rohde & Schwarz	CMW500	LTE Radio Communication Tester	8/30/2010	Annual	8/30/2011	100976
Agilent	8648D	Signal Generator	4/1/2010	Annual	4/1/2011	3629U00687
Aprel	ALS-PR-DIEL	Dielectric Probe Kit	N/A		N/A	260-00959
Agilent	E5515C	Wireless Communications Tester	4/14/2010	Annual	4/14/2011	US41140256
SPEAG	ES3DV3	SAR Probe	2/10/2010	Annual	2/10/2011	3173
Amplifier Research	5S1G4	5W, 800MHz-4.2GHz	N/A			17042

Justification for 2-year calibration cycle for SAR dipoles is found in Section 14.3.

© 2011 PCTEST Engineering Laboratory, Inc.

18 MEASUREMENT UNCERTAINTIES

Applicable for 800 – 3000 MHz.

a	b	c	d	e= f(d,k)	f	g	h = c x f/e	i = c x g/e	k
Uncertainty Component	**IEEE 1528 Sec.**	**Tol. (± %)**	**Prob. Dist.**	**Div.**	**c_i 1gm**	**c_i 10 gms**	**1gm u_i (± %)**	**10gms u_i (± %)**	**v_i**
Measurement System									
Probe Calibration	E.2.1	5.5	N	1	1.0	1.0	5.5	5.5	∞
Axial Isotropy	E.2.2	0.25	N	1	0.7	0.7	0.2	0.2	∞
Hemishperical Isotropy	E.2.2	1.3	N	1	1.0	1.0	1.3	1.3	∞
Boundary Effect	E.2.3	0.4	N	1	1.0	1.0	0.4	0.4	∞
Linearity	E.2.4	0.3	N	1	1.0	1.0	0.3	0.3	∞
System Detection Limits	E.2.5	5.1	N	1	1.0	1.0	5.1	5.1	∞
Readout Electronics	E.2.6	1.0	N	1	1.0	1.0	1.0	1.0	∞
Response Time	E.2.7	0.8	R	1.73	1.0	1.0	0.5	0.5	∞
Integration Time	E.2.8	2.6	R	1.73	1.0	1.0	1.5	1.5	∞
RF Ambient Conditions	E.6.1	3.0	R	1.73	1.0	1.0	1.7	1.7	∞
Probe Positioner Mechanical Tolerance	E.6.2	0.4	R	1.73	1.0	1.0	0.2	0.2	∞
Probe Positioning w/ respect to Phantom	E.6.3	2.9	R	1.73	1.0	1.0	1.7	1.7	∞
Extrapolation, Interpolation & Integration algorithms for Max. SAR Evaluation	E.5	1.0	R	1.73	1.0	1.0	0.6	0.6	∞
Test Sample Related									
Test Sample Positioning	E.4.2	6.0	N	1	1.0	1.0	6.0	6.0	287
Device Holder Uncertainty	E.4.1	3.32	R	1.73	1.0	1.0	1.9	1.9	∞
Output Power Variation - SAR drift measurement	6.6.2	5.0	R	1.73	1.0	1.0	2.9	2.9	∞
Phantom & Tissue Parameters									
Phantom Uncertainty (Shape & Thickness tolerances)	E.3.1	4.0	R	1.73	1.0	1.0	2.3	2.3	∞
Liquid Conductivity - deviation from target values	E.3.2	5.0	R	1.73	0.64	0.43	1.8	1.2	∞
Liquid Conductivity - measurement uncertainty	E.3.3	3.8	N	1	0.64	0.43	2.4	1.6	6
Liquid Permittivity - deviation from target values	E.3.2	5.0	R	1.73	0.60	0.49	1.7	1.4	∞
Liquid Permittivity - measurement uncertainty	E.3.3	4.5	N	1	0.60	0.49	2.7	2.2	6
Combined Standard Uncertainty (k=1)			RSS				11.8	11.5	299
Expanded Uncertainty (95% CONFIDENCE LEVEL)			k=2				23.7	23.0	

The above measurement uncertainties are according to IEEE Std. 1528-2003

© 2011 PCTEST Engineering Laboratory, Inc.

19 CONCLUSION

19.1 Measurement Conclusion

The SAR evaluation indicates that the EUT complies with the RF radiation exposure limits of the FCC and Industry Canada, with respect to all parameters subject to this test. These measurements were taken to simulate the RF effects of RF exposure under worst-case conditions. Precise laboratory measures were taken to assure repeatability of the tests. The results and statements relate only to the item(s) tested.

Please note that the absorption and distribution of electromagnetic energy in the body are very complex phenomena that depend on the mass, shape, and size of the body, the orientation of the body with respect to the field vectors, and the electrical properties of both the body and the environment. Other variables that may play a substantial role in possible biological effects are those that characterize the environment (e.g. ambient temperature, air velocity, relative humidity, and body insulation) and those that characterize the individual (e.g. age, gender, activity level, debilitation, or disease). Because various factors may interact with one another to vary the specific biological outcome of an exposure to electromagnetic fields, any protection guide should consider maximal amplification of biological effects as a result of field-body interactions, environmental conditions, and physiological variables. [3]

© 2011 PCTEST Engineering Laboratory, Inc.

20 REFERENCES

[1] Federal Communications Commission, ET Docket 93-62, Guidelines for Evaluating the Environmental Effects of Radiofrequency Radiation, Aug. 1996.

[2] ANSI/IEEE C95.1-2005, American National Standard safety levels with respect to human exposure to radio frequency electromagnetic fields, 300kHz to 100GHz, New York: IEEE, 2006.

[3] ANSI/IEEE C95.1-1992, American National Standard safety levels with respect to human exposure to radio frequency electromagnetic fields, 300kHz to 100GHz, New York: IEEE, Sept. 1992.

[4] ANSI/IEEE C95.3-2002, IEEE Recommended Practice for the Measurement of Potentially Hazardous Electromagnetic Fields - RF and Microwave, New York: IEEE, December 2002.

[5] Federal Communications Commission, OET Bulletin 65 (Edition 97-01), Supplement C (Edition 01-01), Evaluating Compliance with FCC Guidelines for Human Exposure to Radiofrequency Electromagnetic Fields, June 2001.

[6] IEEE Standards Coordinating Committee 34 – IEEE Std. 1528-2003, Recommended Practice for Determining the Peak Spatial-Average Specific Absorption Rate (SAR) in the Human Body Due to Wireless Communications Devices.

[7] NCRP, National Council on Radiation Protection and Measurements, Biological Effects and Exposure Criteria for RadioFrequency Electromagnetic Fields, NCRP Report No. 86, 1986. Reprinted Feb. 1995.

[8] T. Schmid, O. Egger, N. Kuster, Automated E-field scanning system for dosimetric assessments, IEEE Transaction on Microwave Theory and Techniques, vol. 44, Jan. 1996, pp. 105-113.

[9] K. Pokovic, T. Schmid, N. Kuster, Robust setup for precise calibration of E-field probes in tissue simulating liquids at mobile communications frequencies, ICECOM97, Oct. 1997, pp. 120-124.

[10] K. Pokovic, T. Schmid, and N. Kuster, E-field Probe with improved isotropy in brain simulating liquids, Proceedings of the ELMAR, Zadar, Croatia, June 23-25, 1996, pp. 172-175.

[11] Schmid & Partner Engineering AG, Application Note: Data Storage and Evaluation, June 1998, p2.

[12] V. Hombach, K. Meier, M. Burkhardt, E. Kuhn, N. Kuster, The Dependence of EM Energy Absorption upon Human Head Modeling at 900 MHz, IEEE Transaction on Microwave Theory and Techniques, vol. 44 no. 10, Oct. 1996, pp. 1865-1873.

[13] N. Kuster and Q. Balzano, Energy absorption mechanism by biological bodies in the near field of dipole antennas above 300MHz, IEEE Transaction on Vehicular Technology, vol. 41, no. 1, Feb. 1992, pp. 17-23.

[14] G. Hartsgrove, A. Kraszewski, A. Surowiec, Simulated Biological Materials for Electromagnetic Radiation Absorption Studies, University of Ottawa, Bioelectromagnetics, Canada: 1987, pp. 29-36.

[15] Q. Balzano, O. Garay, T. Manning Jr., Electromagnetic Energy Exposure of Simulated Users of Portable Cellular Telephones, IEEE Transactions on Vehicular Technology, vol. 44, no.3, Aug. 1995.

© 2011 PCTEST Engineering Laboratory, Inc.

[16] W. Gander, Computermathematick, Birkhaeuser, Basel, 1992.

[17] W.H. Press, S.A. Teukolsky, W.T. Vetterling, and B.P. Flannery, Numerical Recepies in C, The Art of Scientific Computing, Second edition, Cambridge University Press, 1992.

[18] Federal Communications Commission, OET Bulletin 65, Evaluating Compliance with FCC Guidelines for Human Exposure to Radiofrequency Electromagnetic Fields. Supplement C, Dec. 1997.

[19] N. Kuster, R. Kastle, T. Schmid, Dosimetric evaluation of mobile communications equipment with known precision, IEEE Transaction on Communications, vol. E80-B, no. 5, May 1997, pp. 645-652.

[20] CENELEC CLC/SC111B, European Prestandard (prENV 50166-2), Human Exposure to Electromagnetic Fields High-frequency: 10kHz-300GHz, Jan. 1995.

[21] Prof. Dr. Niels Kuster, ETH, Eidgenössische Technische Hoschschule Zürich, Dosimetric Evaluation of the Cellular Phone.

[22] IEC 62209-1, Human exposure to radio frequency fields from hand-held and body-mounted wireless communication devices - Human models, instrumentation, and procedures - Part 1: Procedure to determine the specific absorption rate (SAR) for hand-held devices used in close proximity to the ear (frequency range of 300 MHz to 3 GHz), Feb. 2005.

[23] Industry Canada RSS-102 Radio Frequency Exposure Compliance of Radiocommunication Apparatus (All Frequency Bands) Issue 4, March 2010.

[24] Health Canada Safety Code 6 Limits of Human Exposure to Radio Frequency Electromagnetic Fields in the Frequency Range from 3 kHz – 300 GHz, 2009

[25] FCC Public Notice DA-02-1438. Office of Engineering and Technology Announces a Transition Period for the Phantom Requirements of Supplement C to OET Bulletin 65, June 19, 2002

[26] FCC SAR Measurement Procedures for 3G Devices KDB Publication 941225

[27] SAR Measurement procedures for IEEE 802.11a/b/g KDB Publication 248227

[28] FCC SAR Considerations for Handsets with Multiple Transmitters and Antennas, KDB Publication 648474

[29] FCC Application Note for SAR Probe Calibration and System Verification Consideration for Measurements at 150 MHz – 3 GHz, KDB Publication 450824

[30] FCC SAR Evaluation Considerations for Laptop Computers with Antennas Built-in on Display Screens, KDB Publication 616217

[31] FCC SAR Measurement Requirements for 3 – 6 GHz, KDB Publication 865664

[32] FCC Mobile Portable RF Exposure Procedure, KDB Publication 447498

[33] FCC SAR Procedures for Dongle Transmitters, KDB Publication 447498

[34] Anexo à Resolução No. 533, de 10 de Septembro de 2009.

[35] FCC SAR Test Considerations for LTE Handsets and Data Modems, KDB Publication 941225

© 2011 PCTEST Engineering Laboratory, Inc.

APPENDIX A: SAR TEST DATA

PCTEST ENGINEERING LABORATORY, INC.

DUT: A3LGTS5830L; Type: 850/1900 GSM/GPRS/EDGE/WCDMA Phone with Bluetooth and WLAN; Serial: FH-293-A

Communication System: GSM850; Frequency: 836.6 MHz;Duty Cycle: 1:8.3
Medium: 835 Head Medium parameters used (interpolated):
f = 836.6 MHz; σ = 0.927 mho/m; ε_r = 43.3; ρ = 1000 kg/m^3
Phantom section: Right Section

Test Date: 01-05-2011; Ambient Temp: 24.1 °C; Tissue Temp: 22.9 °C

Probe: ES3DV2 - SN3022; ConvF(6.02, 6.02, 6.02); Calibrated: 9/21/2010
Sensor-Surface: 4mm (Mechanical Surface Detection)
Electronics: DAE3 Sn455; Calibrated: 11/18/2010
Phantom: SAM Sub; Type: SAM 4.0; Serial: TP-1403
Measurement SW: DASY4, V4.7 Build 80; Postprocessing SW: SEMCAD, V1.8 Build 186

Mode: GSM 850, Right Head, Touch, Mid.ch

Area Scan (7x14x1): Measurement grid: dx=15mm, dy=15mm
Zoom Scan (5x5x7)/Cube 0: Measurement grid: dx=8mm, dy=8mm, dz=5mm
Reference Value = 17.2 V/m
Peak SAR (extrapolated) = 0.339 W/kg
SAR(1 g) = 0.252 mW/g; SAR(10 g) = 0.188 mW/g

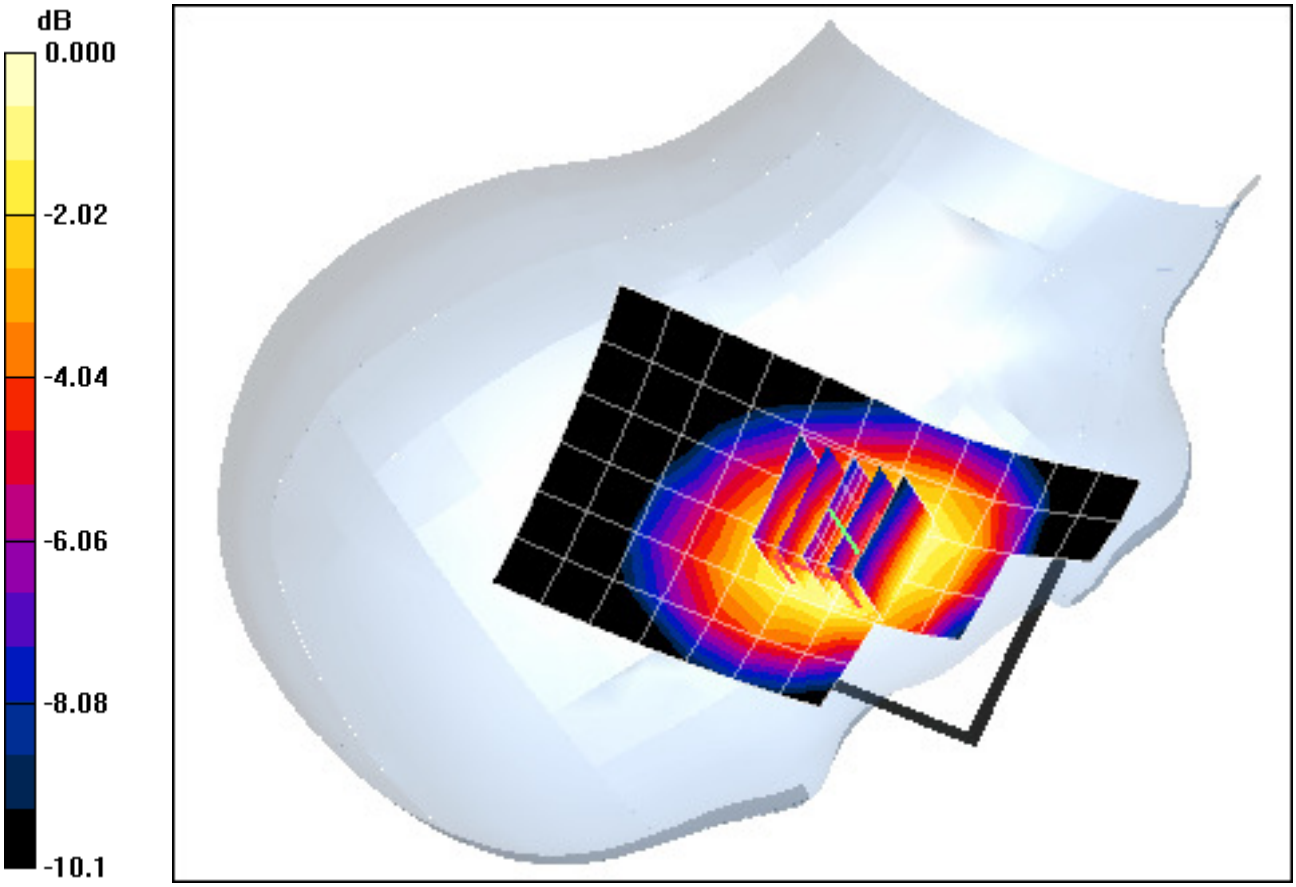

0 dB = 0.269mW/g

PCTEST ENGINEERING LABORATORY, INC.

DUT: A3LGTS5830L; Type: 850/1900 GSM/GPRS/EDGE/WCDMA Phone with Bluetooth and WLAN; Serial: FH-293-A

Communication System: GSM850; Frequency: 836.6 MHz;Duty Cycle: 1:8.3
Medium: 835 Head Medium parameters used (interpolated):
f = 836.6 MHz; σ = 0.927 mho/m; ε_r = 43.3; ρ = 1000 kg/m^3
Phantom section: Right Section

Test Date: 01-05-2011; Ambient Temp: 24.1 °C; Tissue Temp: 22.9 °C

Probe: ES3DV2 - SN3022; ConvF(6.02, 6.02, 6.02); Calibrated: 9/21/2010
Sensor-Surface: 4mm (Mechanical Surface Detection)
Electronics: DAE3 Sn455; Calibrated: 11/18/2010
Phantom: SAM Sub; Type: SAM 4.0; Serial: TP-1403
Measurement SW: DASY4, V4.7 Build 80; Postprocessing SW: SEMCAD, V1.8 Build 186

Mode: GSM 850, Right Head, Tilt, Mid.ch

Area Scan (7x14x1): Measurement grid: dx=15mm, dy=15mm
Zoom Scan (5x5x7)/Cube 0: Measurement grid: dx=8mm, dy=8mm, dz=5mm
Reference Value = 13.8 V/m
Peak SAR (extrapolated) = 0.214 W/kg
SAR(1 g) = 0.170 mW/g; SAR(10 g) = 0.128 mW/g

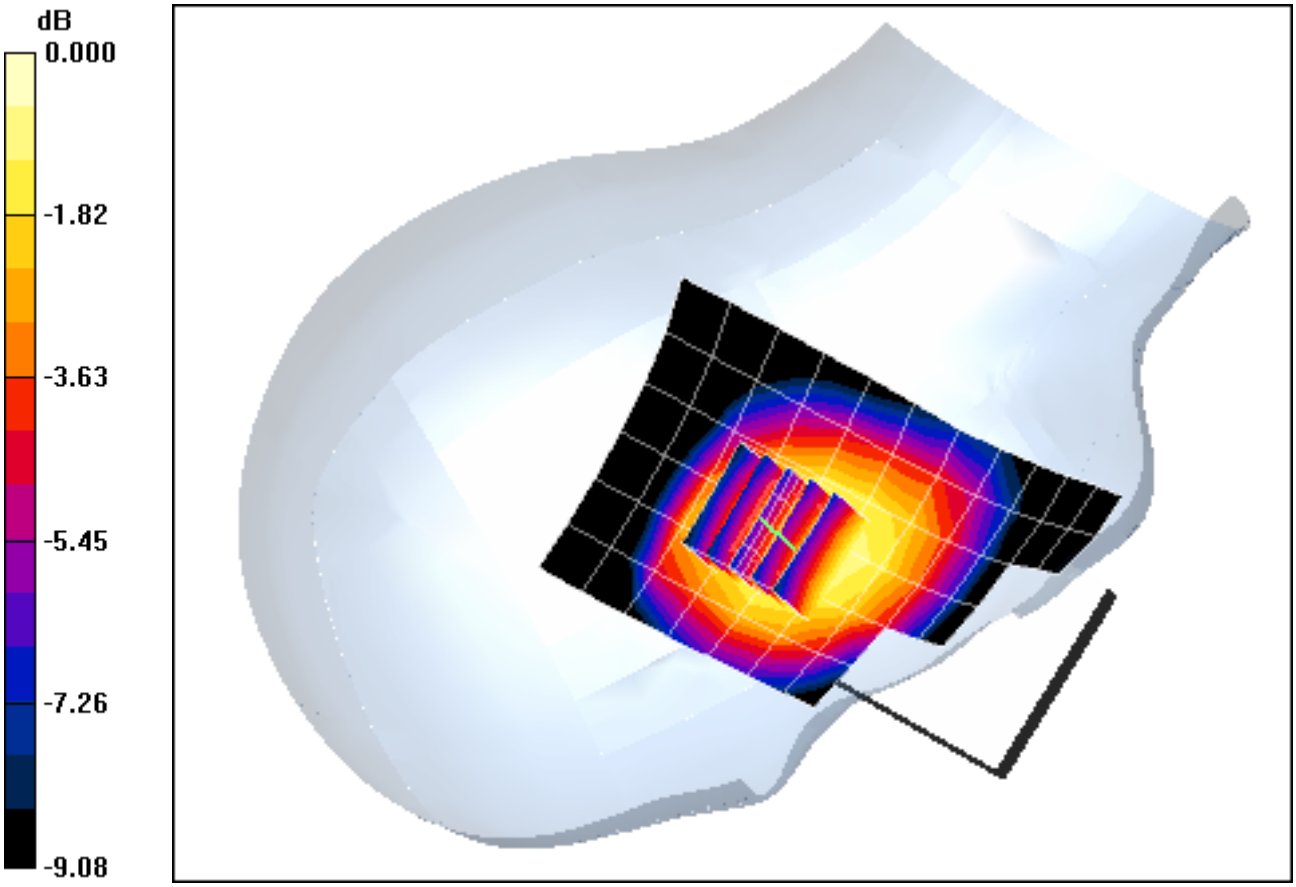

0 dB = 0.180mW/g

PCTEST ENGINEERING LABORATORY, INC.

DUT: A3LGTS5830L; Type: 850/1900 GSM/GPRS/EDGE/WCDMA Phone with Bluetooth and WLAN; Serial: FH-293-A

Communication System: GSM850; Frequency: 836.6 MHz;Duty Cycle: 1:8.3
Medium: 835 Head Medium parameters used (interpolated):
f = 836.6 MHz; σ = 0.927 mho/m; ε_r = 43.3; ρ = 1000 kg/m^3
Phantom section: Left Section

Test Date: 01-05-2011; Ambient Temp: 24.1 °C; Tissue Temp: 22.9 °C

Probe: ES3DV2 - SN3022; ConvF(6.02, 6.02, 6.02); Calibrated: 9/21/2010
Sensor-Surface: 4mm (Mechanical Surface Detection)
Electronics: DAE3 Sn455; Calibrated: 11/18/2010
Phantom: SAM Sub; Type: SAM 4.0; Serial: TP-1403
Measurement SW: DASY4, V4.7 Build 80; Postprocessing SW: SEMCAD, V1.8 Build 186

Mode: GSM 850, Left Head, Touch, Mid.ch

Area Scan (7x14x1): Measurement grid: dx=15mm, dy=15mm
Zoom Scan (5x5x7)/Cube 0: Measurement grid: dx=8mm, dy=8mm, dz=5mm
Reference Value = 17.6 V/m
Peak SAR (extrapolated) = 0.335 W/kg
SAR(1 g) = 0.268 mW/g; SAR(10 g) = 0.197 mW/g

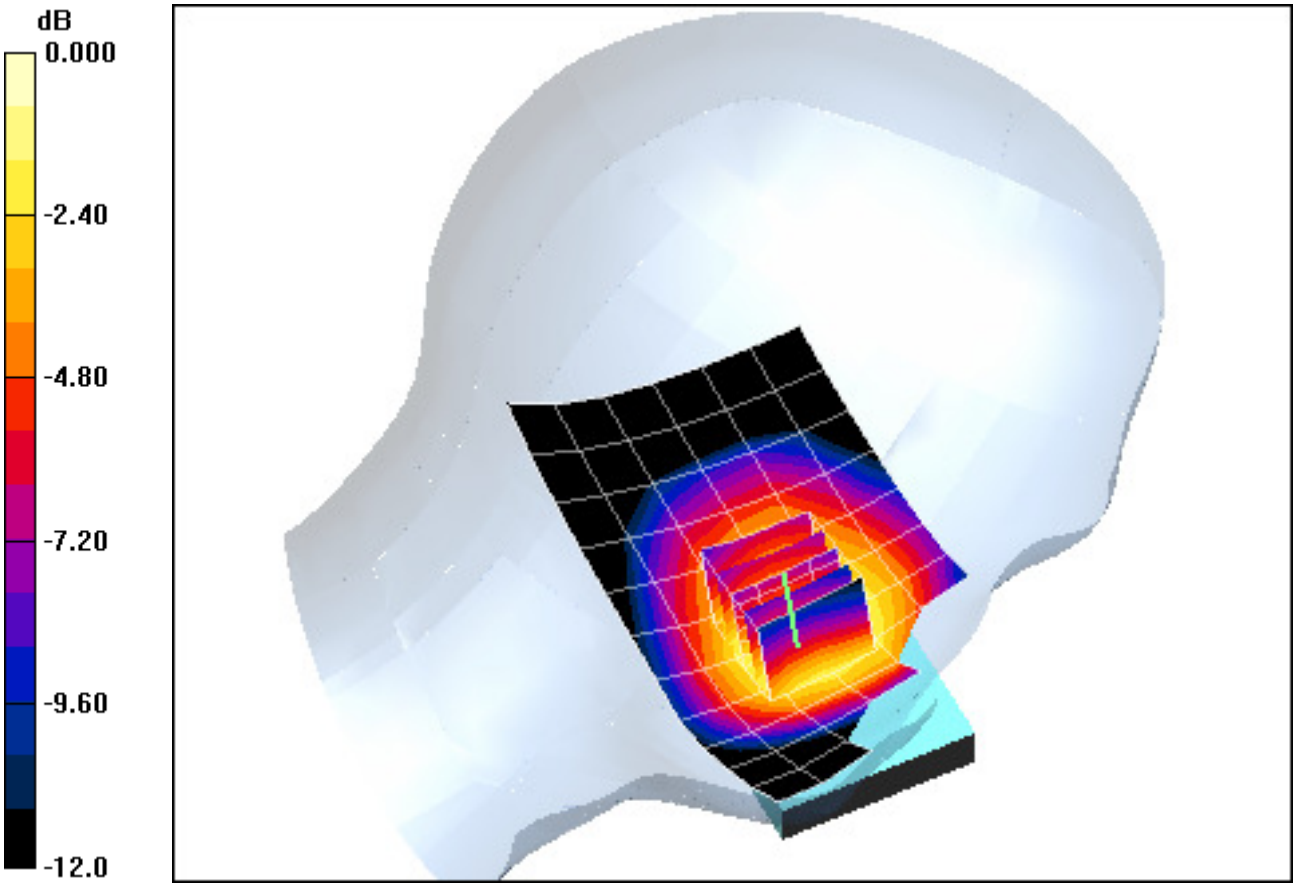

0 dB = 0.283mW/g

PCTEST ENGINEERING LABORATORY, INC.

DUT: A3LGTS5830L; Type: 850/1900 GSM/GPRS/EDGE/WCDMA Phone with Bluetooth and WLAN; Serial: FH-293-A

Communication System: GSM850; Frequency: 836.6 MHz;Duty Cycle: 1:8.3
Medium: 835 Head Medium parameters used (interpolated):
f = 836.6 MHz; σ = 0.927 mho/m; ε_r = 43.3; ρ = 1000 kg/m^3
Phantom section: Left Section

Test Date: 01-05-2011; Ambient Temp: 24.1 °C; Tissue Temp: 22.9 °C

Probe: ES3DV2 - SN3022; ConvF(6.02, 6.02, 6.02); Calibrated: 9/21/2010
Sensor-Surface: 4mm (Mechanical Surface Detection)
Electronics: DAE3 Sn455; Calibrated: 11/18/2010
Phantom: SAM Sub; Type: SAM 4.0; Serial: TP-1403
Measurement SW: DASY4, V4.7 Build 80; Postprocessing SW: SEMCAD, V1.8 Build 186

Mode: GSM 850, Left Head, Tilt, Mid.ch

Area Scan (7x14x1): Measurement grid: dx=15mm, dy=15mm
Zoom Scan (5x5x7)/Cube 0: Measurement grid: dx=8mm, dy=8mm, dz=5mm
Reference Value = 13.7 V/m
Peak SAR (extrapolated) = 0.202 W/kg
SAR(1 g) = 0.162 mW/g; SAR(10 g) = 0.123 mW/g

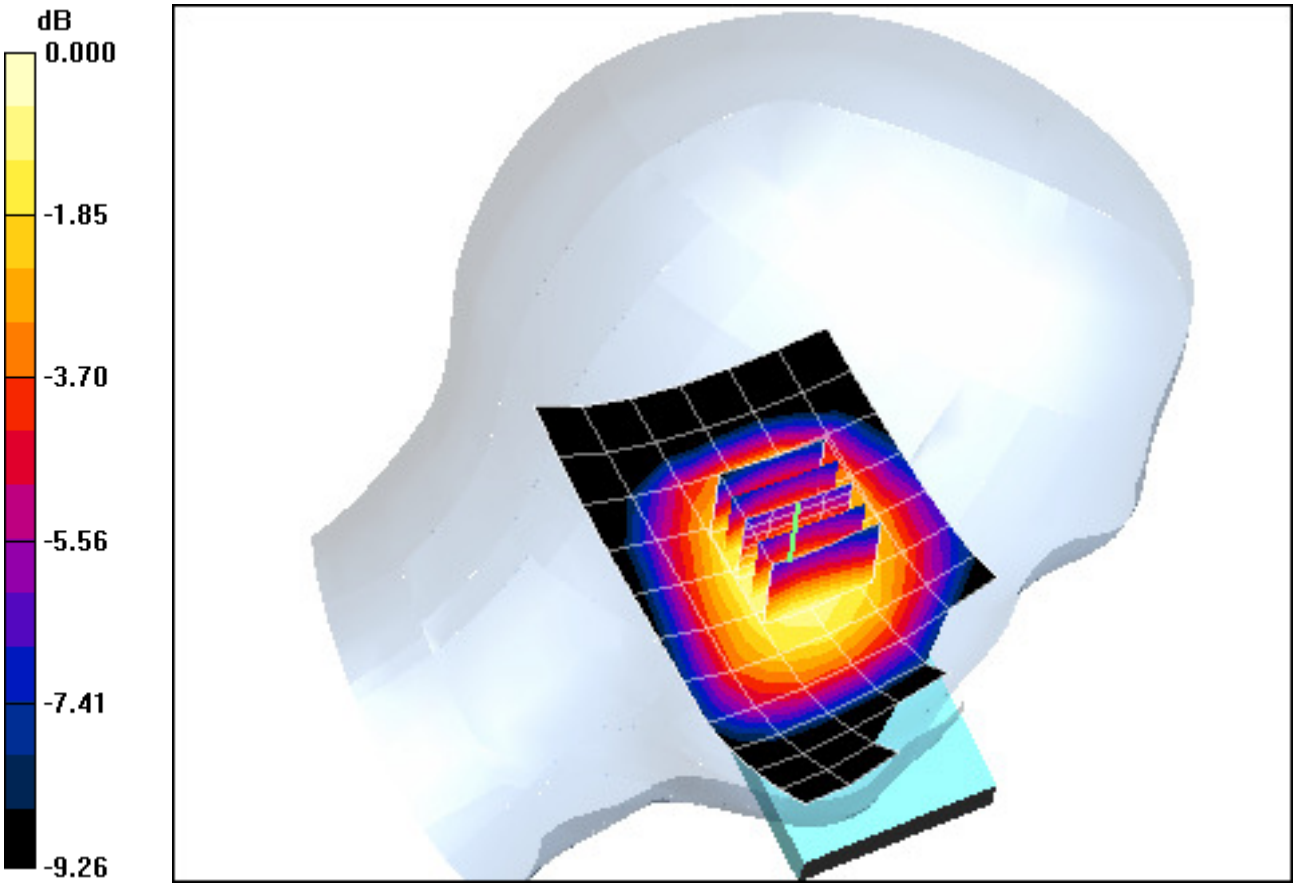

0 dB = 0.172mW/g

PCTEST ENGINEERING LABORATORY, INC.

DUT: A3LGTS5830L; Type: 850/1900 GSM/GPRS/EDGE/WCDMA Phone with Bluetooth and WLAN; Serial: FH-293-A

Communication System: GSM1900; Frequency: 1880 MHz;Duty Cycle: 1:8.3
Medium: 1900 Head Medium parameters used:
f = 1880 MHz; σ = 1.38 mho/m; ε_r = 41.1; ρ = 1000 kg/m^3
Phantom section: Right Section

Test Date: 01-04-2011; Ambient Temp: 22.4 °C; Tissue Temp: 21.8 °C

Probe: EX3DV4 - SN3561; ConvF(6.69, 6.69, 6.69); Calibrated: 8/19/2010
Sensor-Surface: 4mm (Mechanical Surface Detection)
Electronics: DAE4 Sn665; Calibrated: 4/21/2010
Phantom: SAM with CRP; Type: SAM; Serial: TP1375
Measurement SW: DASY4, V4.7 Build 80; Postprocessing SW: SEMCAD, V1.8 Build 186

Mode: GSM 1900, Right Head, Touch, Mid.ch

Area Scan (7x14x1): Measurement grid: dx=15mm, dy=15mm
Zoom Scan (5x5x7)/Cube 0: Measurement grid: dx=8mm, dy=8mm, dz=5mm
Reference Value = 20.8 V/m
Peak SAR (extrapolated) = 1.06 W/kg
SAR(1 g) = 0.617 mW/g; SAR(10 g) = 0.338 mW/g

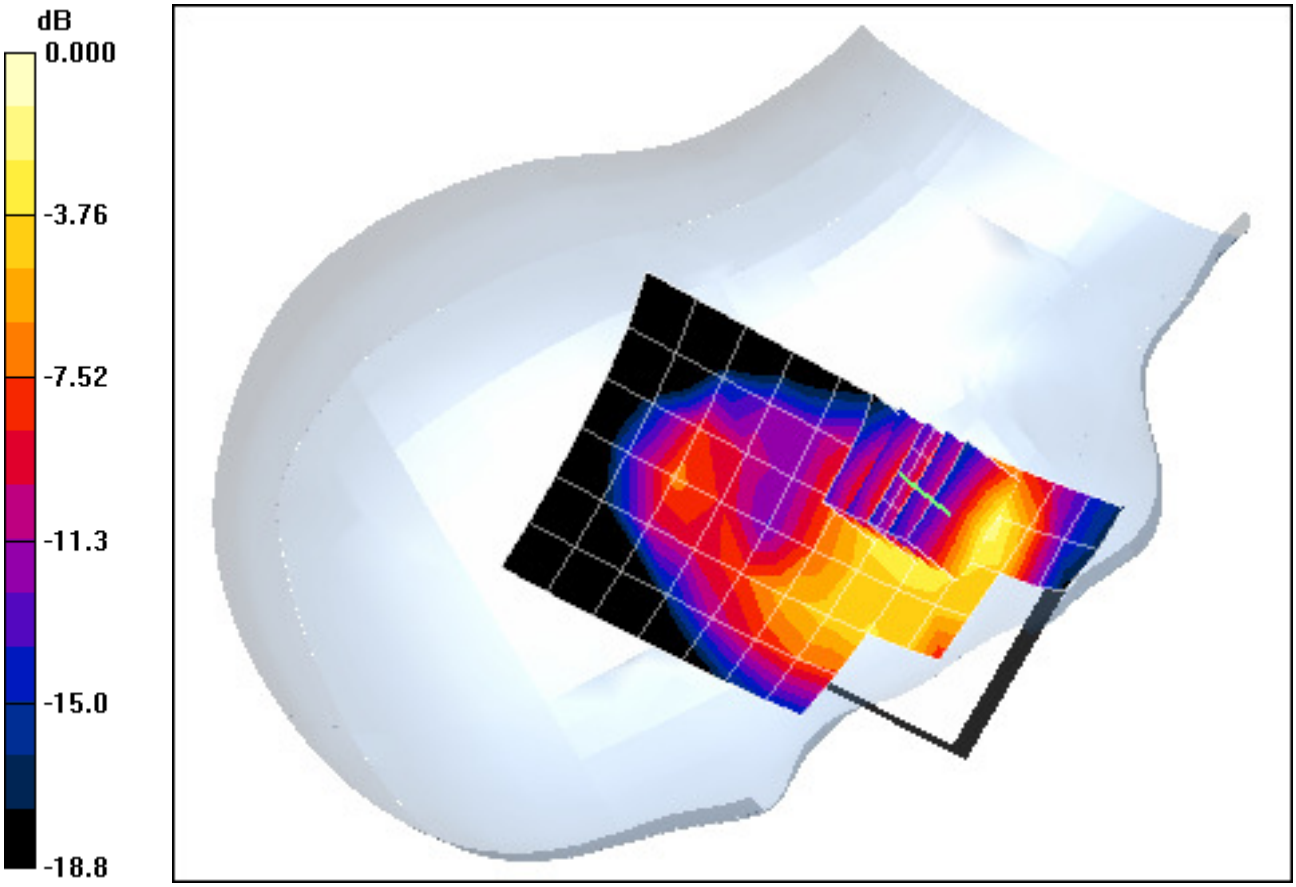

0 dB = 0.692mW/g

PCTEST ENGINEERING LABORATORY, INC.

DUT: A3LGTS5830L; Type: 850/1900 GSM/GPRS/EDGE/WCDMA Phone with Bluetooth and WLAN; Serial: FH-293-A

Communication System: GSM1900; Frequency: 1880 MHz;Duty Cycle: 1:8.3
Medium: 1900 Head Medium parameters used:
f = 1880 MHz; σ = 1.38 mho/m; ε_r = 41.1; ρ = 1000 kg/m^3
Phantom section: Right Section

Test Date: 01-04-2011; Ambient Temp: 22.4 °C; Tissue Temp: 21.8 °C

Probe: EX3DV4 - SN3561; ConvF(6.69, 6.69, 6.69); Calibrated: 8/19/2010
Sensor-Surface: 4mm (Mechanical Surface Detection)
Electronics: DAE4 Sn665; Calibrated: 4/21/2010
Phantom: SAM with CRP; Type: SAM; Serial: TP1375
Measurement SW: DASY4, V4.7 Build 80; Postprocessing SW: SEMCAD, V1.8 Build 186

Mode: GSM 1900, Right Head, Tilt, Mid.ch

Area Scan (7x14x1): Measurement grid: dx=15mm, dy=15mm
Zoom Scan (5x5x7)/Cube 0: Measurement grid: dx=8mm, dy=8mm, dz=5mm
Reference Value = 13.1 V/m
Peak SAR (extrapolated) = 0.400 W/kg
SAR(1 g) = 0.229 mW/g; SAR(10 g) = 0.122 mW/g

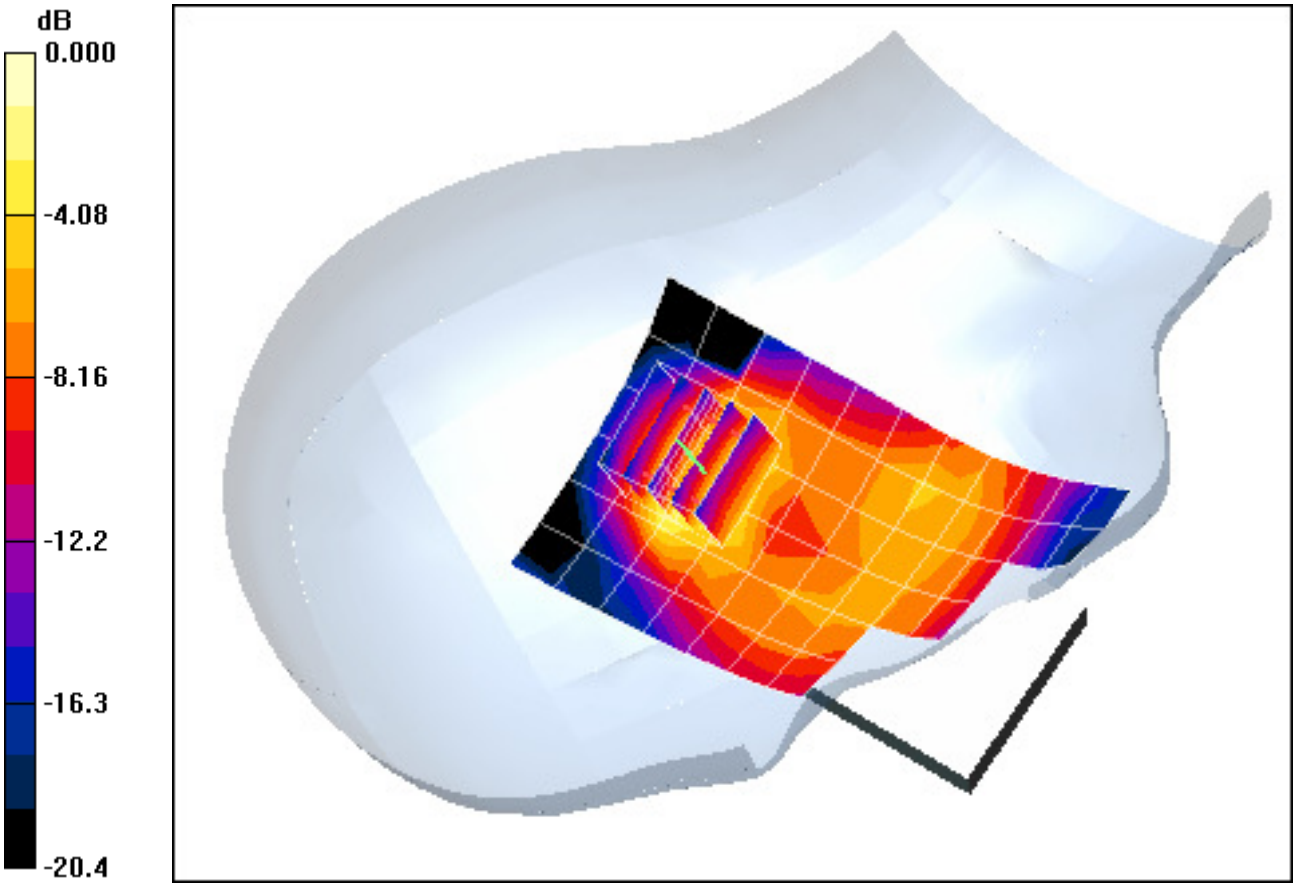

0 dB = 0.255mW/g

PCTEST ENGINEERING LABORATORY, INC.

DUT: A3LGTS5830L; Type: 850/1900 GSM/GPRS/EDGE/WCDMA Phone with Bluetooth and WLAN; Serial: FH-293-A

Communication System: GSM1900; Frequency: 1880 MHz;Duty Cycle: 1:8.3
Medium: 1900 Head Medium parameters used:
f = 1880 MHz; σ = 1.38 mho/m; ε_r = 41.1; ρ = 1000 kg/m^3
Phantom section: Left Section

Test Date: 01-04-2011; Ambient Temp: 22.4 °C; Tissue Temp: 21.8 °C

Probe: EX3DV4 - SN3561; ConvF(6.69, 6.69, 6.69); Calibrated: 8/19/2010
Sensor-Surface: 4mm (Mechanical Surface Detection)
Electronics: DAE4 Sn665; Calibrated: 4/21/2010
Phantom: SAM with CRP; Type: SAM; Serial: TP1375
Measurement SW: DASY4, V4.7 Build 80; Postprocessing SW: SEMCAD, V1.8 Build 186

Mode: GSM 1900, Left Head, Touch, Mid.ch

Area Scan (7x14x1): Measurement grid: dx=15mm, dy=15mm
Zoom Scan (5x5x7)/Cube 0: Measurement grid: dx=8mm, dy=8mm, dz=5mm
Reference Value = 10.4 V/m
Peak SAR (extrapolated) = 0.693 W/kg
SAR(1 g) = 0.440 mW/g; SAR(10 g) = 0.262 mW/g

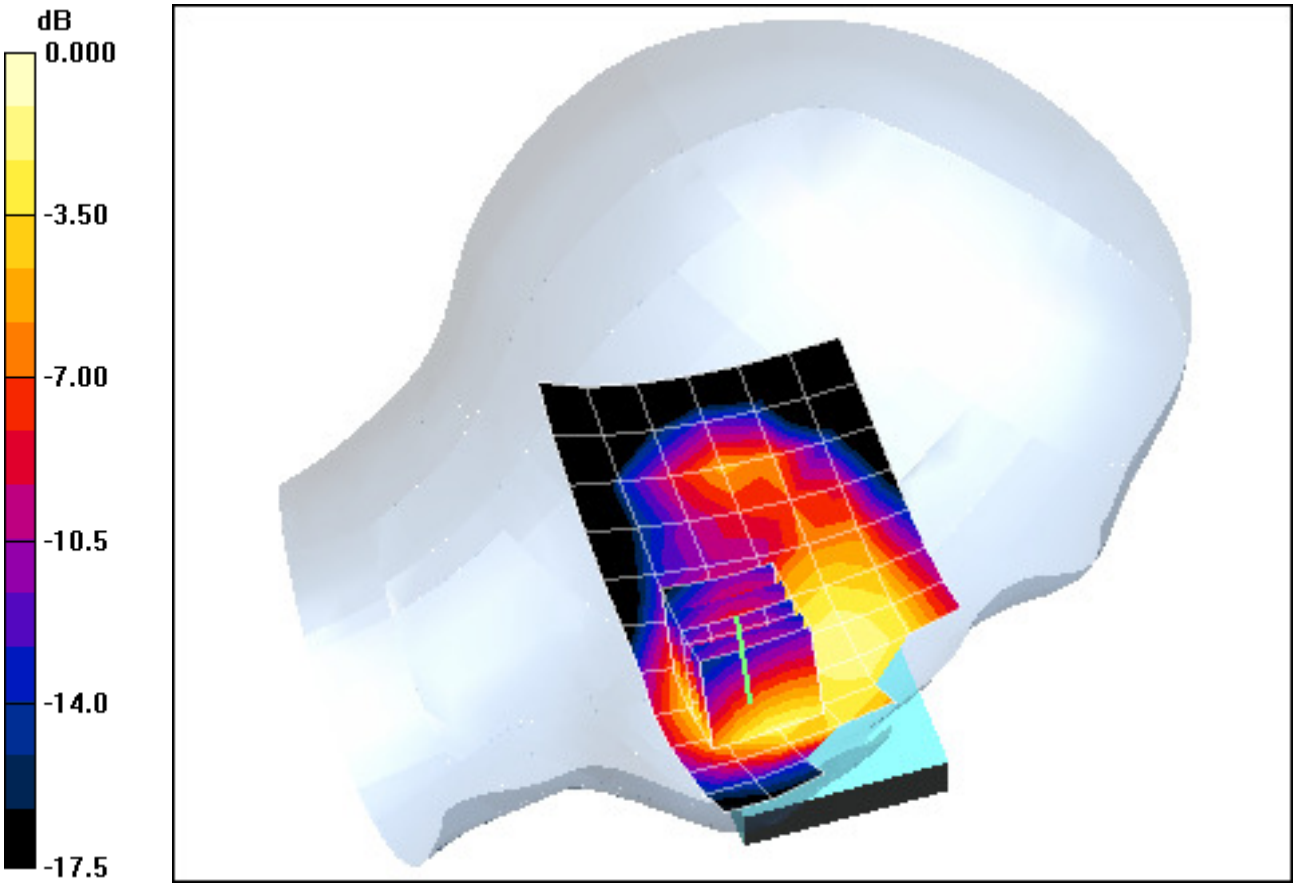

0 dB = 0.477mW/g

PCTEST ENGINEERING LABORATORY, INC.

DUT: A3LGTS5830L; Type: 850/1900 GSM/GPRS/EDGE/WCDMA Phone with Bluetooth and WLAN; Serial: FH-293-A

Communication System: GSM1900; Frequency: 1880 MHz;Duty Cycle: 1:8.3
Medium: 1900 Head Medium parameters used:
f = 1880 MHz; σ = 1.38 mho/m; ε_r = 41.1; ρ = 1000 kg/m^3
Phantom section: Left Section

Test Date: 01-04-2011; Ambient Temp: 22.4 °C; Tissue Temp: 21.8 °C

Probe: EX3DV4 - SN3561; ConvF(6.69, 6.69, 6.69); Calibrated: 8/19/2010
Sensor-Surface: 4mm (Mechanical Surface Detection)
Electronics: DAE4 Sn665; Calibrated: 4/21/2010
Phantom: SAM with CRP; Type: SAM; Serial: TP1375
Measurement SW: DASY4, V4.7 Build 80; Postprocessing SW: SEMCAD, V1.8 Build 186

Mode: GSM 1900, Left Head, Tilt, Mid.ch

Area Scan (7x14x1): Measurement grid: dx=15mm, dy=15mm
Zoom Scan (5x5x7)/Cube 0: Measurement grid: dx=8mm, dy=8mm, dz=5mm
Reference Value = 13.4 V/m
Peak SAR (extrapolated) = 0.406 W/kg
SAR(1 g) = 0.236 mW/g; SAR(10 g) = 0.126 mW/g

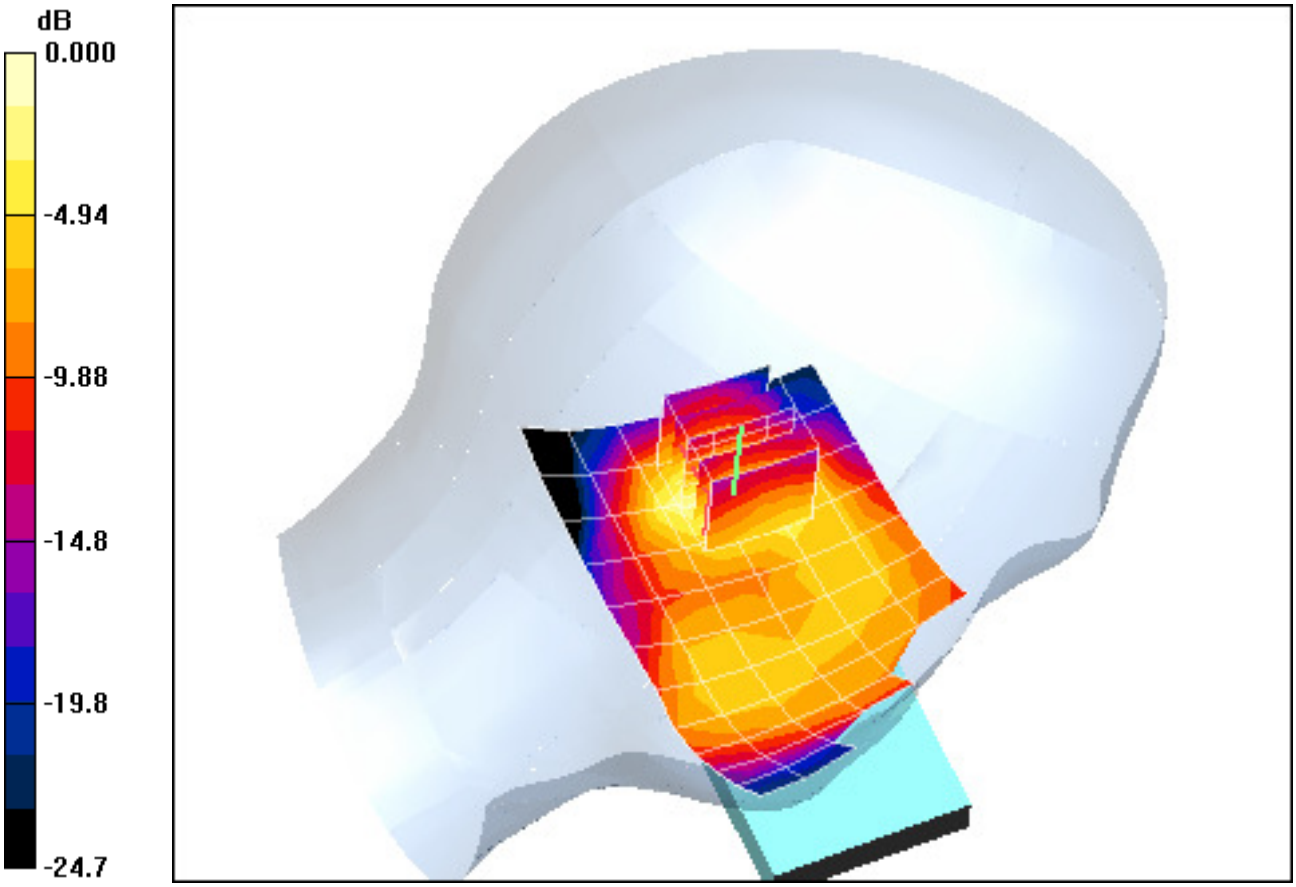

0 dB = 0.257mW/g

PCTEST ENGINEERING LABORATORY, INC.

DUT: A3LGTS5830L; Type: 850/1900 GSM/GPRS/EDGE/WCDMA Phone with Bluetooth and WLAN; Serial: FH-293-A

Communication System: WCDMA850; Frequency: 836.6 MHz;Duty Cycle: 1:1
Medium: 835 Head Medium parameters used (interpolated):
f = 836.6 MHz; σ = 0.903 mho/m; ε_r = 41.6; ρ = 1000 kg/m^3
Phantom section: Right Section

Test Date: 01-03-2011; Ambient Temp: 23.6 °C; Tissue Temp: 21.8 °C

Probe: EX3DV4 - SN3550; ConvF(8.28, 8.28, 8.28); Calibrated: 1/26/2010
Sensor-Surface: 4mm (Mechanical Surface Detection)
Electronics: DAE4 Sn649; Calibrated: 1/22/2010
Phantom: SAM Main; Type: SAM 4.0; Serial: TP-1114
Measurement SW: DASY4, V4.7 Build 80; Postprocessing SW: SEMCAD, V1.8 Build 186

Mode: WCDMA 850, Right Head, Touch, Mid.ch

Area Scan (7x10x1): Measurement grid: dx=15mm, dy=15mm
Zoom Scan (5x5x7)/Cube 0: Measurement grid: dx=8mm, dy=8mm, dz=5mm
Reference Value = 19.2 V/m
Peak SAR (extrapolated) = 0.456 W/kg
SAR(1 g) = 0.324 mW/g; SAR(10 g) = 0.238 mW/g

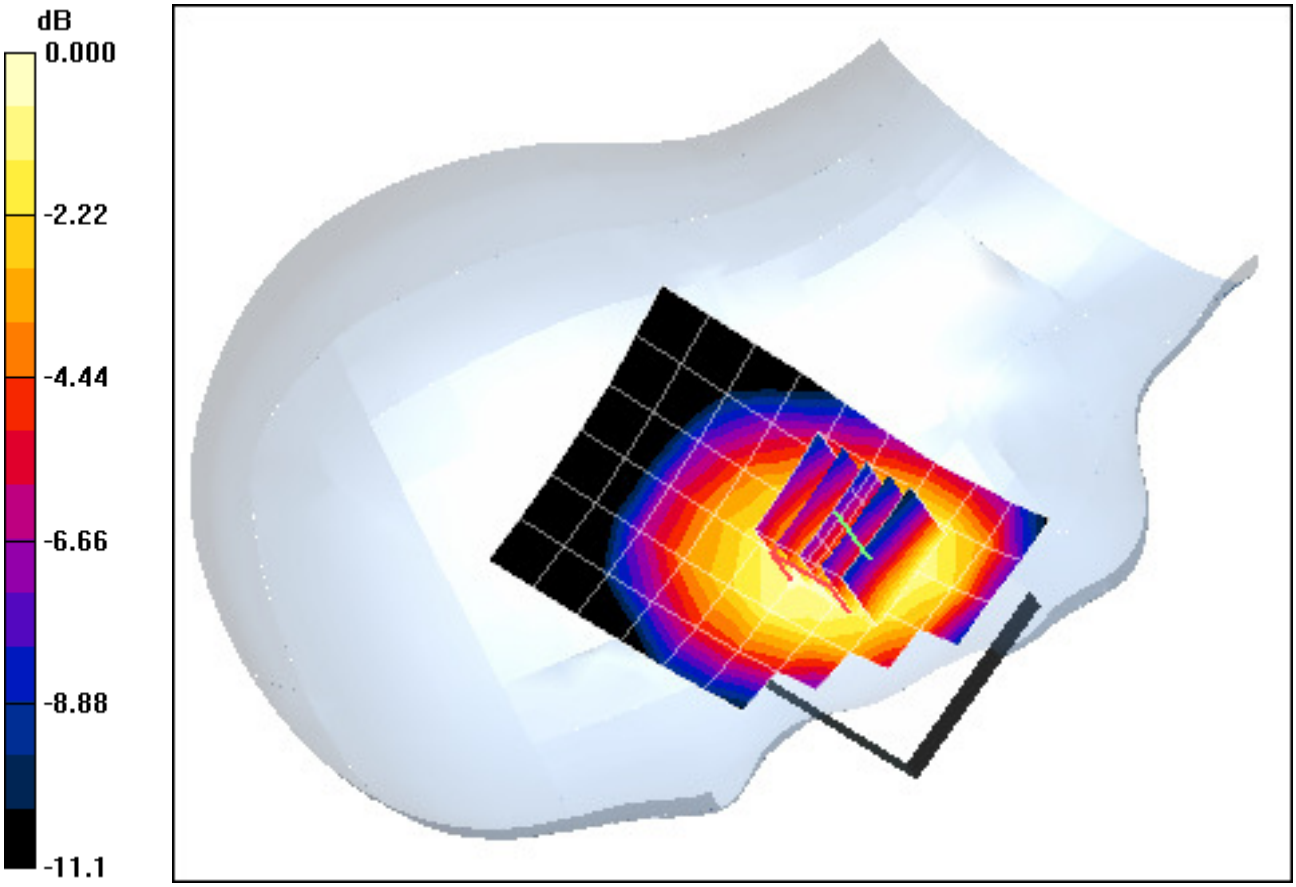

0 dB = 0.341mW/g

PCTEST ENGINEERING LABORATORY, INC.

DUT: A3LGTS5830L; Type: 850/1900 GSM/GPRS/EDGE/WCDMA Phone with Bluetooth and WLAN; Serial: FH-293-A

Communication System: WCDMA850; Frequency: 836.6 MHz;Duty Cycle: 1:1
Medium: 835 Head Medium parameters used (interpolated):
f = 836.6 MHz; σ = 0.903 mho/m; ε_r = 41.6; ρ = 1000 kg/m^3
Phantom section: Right Section

Test Date: 01-03-2011; Ambient Temp: 23.6 °C; Tissue Temp: 21.8 °C

Probe: EX3DV4 - SN3550; ConvF(8.28, 8.28, 8.28); Calibrated: 1/26/2010
Sensor-Surface: 4mm (Mechanical Surface Detection)
Electronics: DAE4 Sn649; Calibrated: 1/22/2010
Phantom: SAM Main; Type: SAM 4.0; Serial: TP-1114
Measurement SW: DASY4, V4.7 Build 80; Postprocessing SW: SEMCAD, V1.8 Build 186

Mode: WCDMA 850, Right Head, Touch, Mid.ch

Area Scan (7x10x1): Measurement grid: dx=15mm, dy=15mm
Zoom Scan (5x5x7)/Cube 0: Measurement grid: dx=8mm, dy=8mm, dz=5mm
Reference Value = 19.2 V/m
Peak SAR (extrapolated) = 0.456 W/kg
SAR(1 g) = 0.324 mW/g; SAR(10 g) = 0.238 mW/g

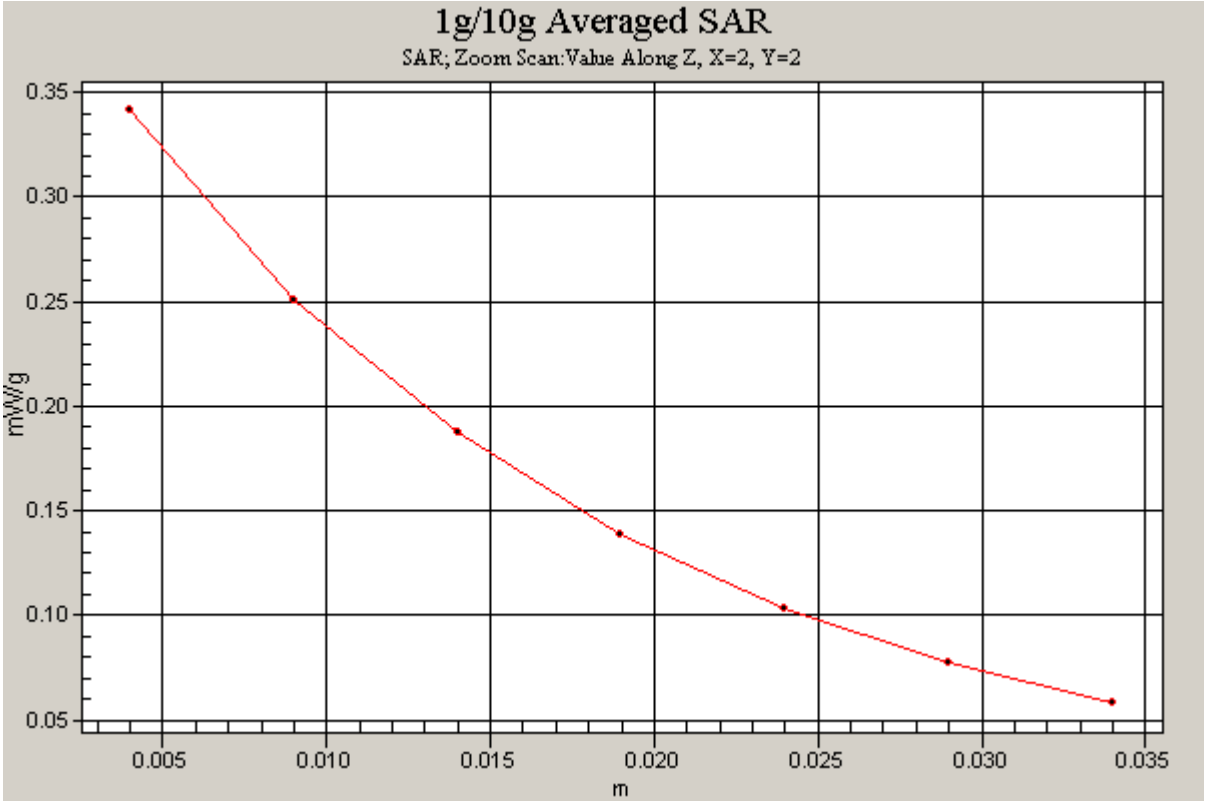

PCTEST ENGINEERING LABORATORY, INC.

DUT: A3LGTS5830L; Type: 850/1900 GSM/GPRS/EDGE/WCDMA Phone with Bluetooth and WLAN; Serial: FH-293-A

Communication System: WCDMA850; Frequency: 836.6 MHz;Duty Cycle: 1:1
Medium: 835 Head Medium parameters used (interpolated):
f = 836.6 MHz; σ = 0.903 mho/m; ε_r = 41.6; ρ = 1000 kg/m^3
Phantom section: Right Section

Test Date: 01-03-2011; Ambient Temp: 23.6 °C; Tissue Temp: 21.8 °C

Probe: EX3DV4 - SN3550; ConvF(8.28, 8.28, 8.28); Calibrated: 1/26/2010
Sensor-Surface: 4mm (Mechanical Surface Detection)
Electronics: DAE4 Sn649; Calibrated: 1/22/2010
Phantom: SAM Main; Type: SAM 4.0; Serial: TP-1114
Measurement SW: DASY4, V4.7 Build 80; Postprocessing SW: SEMCAD, V1.8 Build 186

Mode: WCDMA 850, Right Head, Tilt, Mid.ch

Area Scan (7x10x1): Measurement grid: dx=15mm, dy=15mm
Zoom Scan (5x5x7)/Cube 0: Measurement grid: dx=8mm, dy=8mm, dz=5mm
Reference Value = 14.6 V/m
Peak SAR (extrapolated) = 0.231 W/kg
SAR(1 g) = 0.184 mW/g; SAR(10 g) = 0.138 mW/g

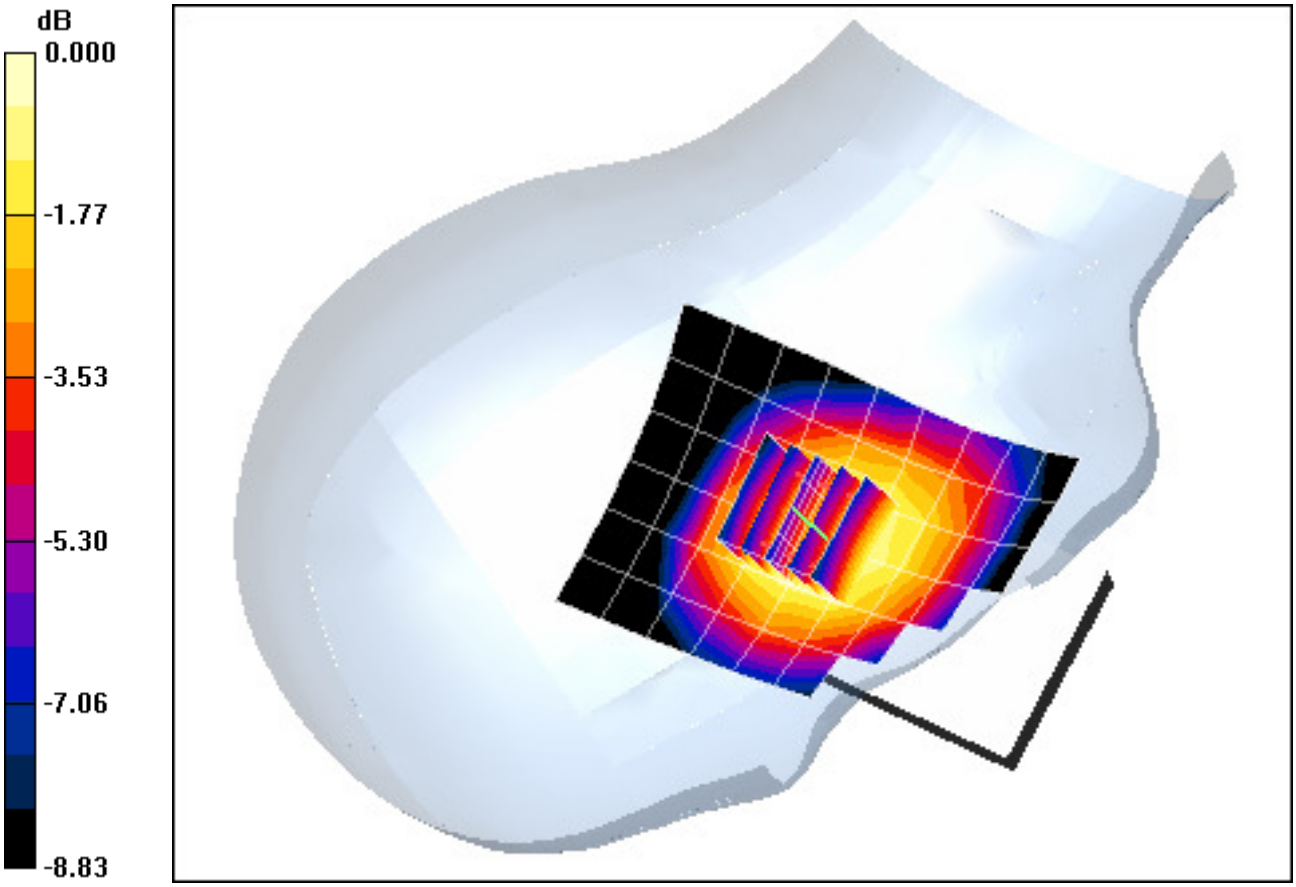

0 dB = 0.194mW/g

PCTEST ENGINEERING LABORATORY, INC.

DUT: A3LGTS5830L; Type: 850/1900 GSM/GPRS/EDGE/WCDMA Phone with Bluetooth and WLAN; Serial: FH-293-A

Communication System: WCDMA850; Frequency: 836.6 MHz;Duty Cycle: 1:1
Medium: 835 Head Medium parameters used (interpolated):
f = 836.6 MHz; σ = 0.903 mho/m; ε_r = 41.6; ρ = 1000 kg/m^3
Phantom section: Left Section

Test Date: 01-03-2011; Ambient Temp: 23.6 °C; Tissue Temp: 21.8 °C

Probe: EX3DV4 - SN3550; ConvF(8.28, 8.28, 8.28); Calibrated: 1/26/2010
Sensor-Surface: 4mm (Mechanical Surface Detection)
Electronics: DAE4 Sn649; Calibrated: 1/22/2010
Phantom: SAM Main; Type: SAM 4.0; Serial: TP-1114
Measurement SW: DASY4, V4.7 Build 80; Postprocessing SW: SEMCAD, V1.8 Build 186

Mode: WCDMA 850, Left Head, Touch, Mid.ch

Area Scan (7x10x1): Measurement grid: dx=15mm, dy=15mm
Zoom Scan (5x5x7)/Cube 0: Measurement grid: dx=8mm, dy=8mm, dz=5mm
Reference Value = 18.9 V/m
Peak SAR (extrapolated) = 0.390 W/kg
SAR(1 g) = 0.306 mW/g; SAR(10 g) = 0.225 mW/g

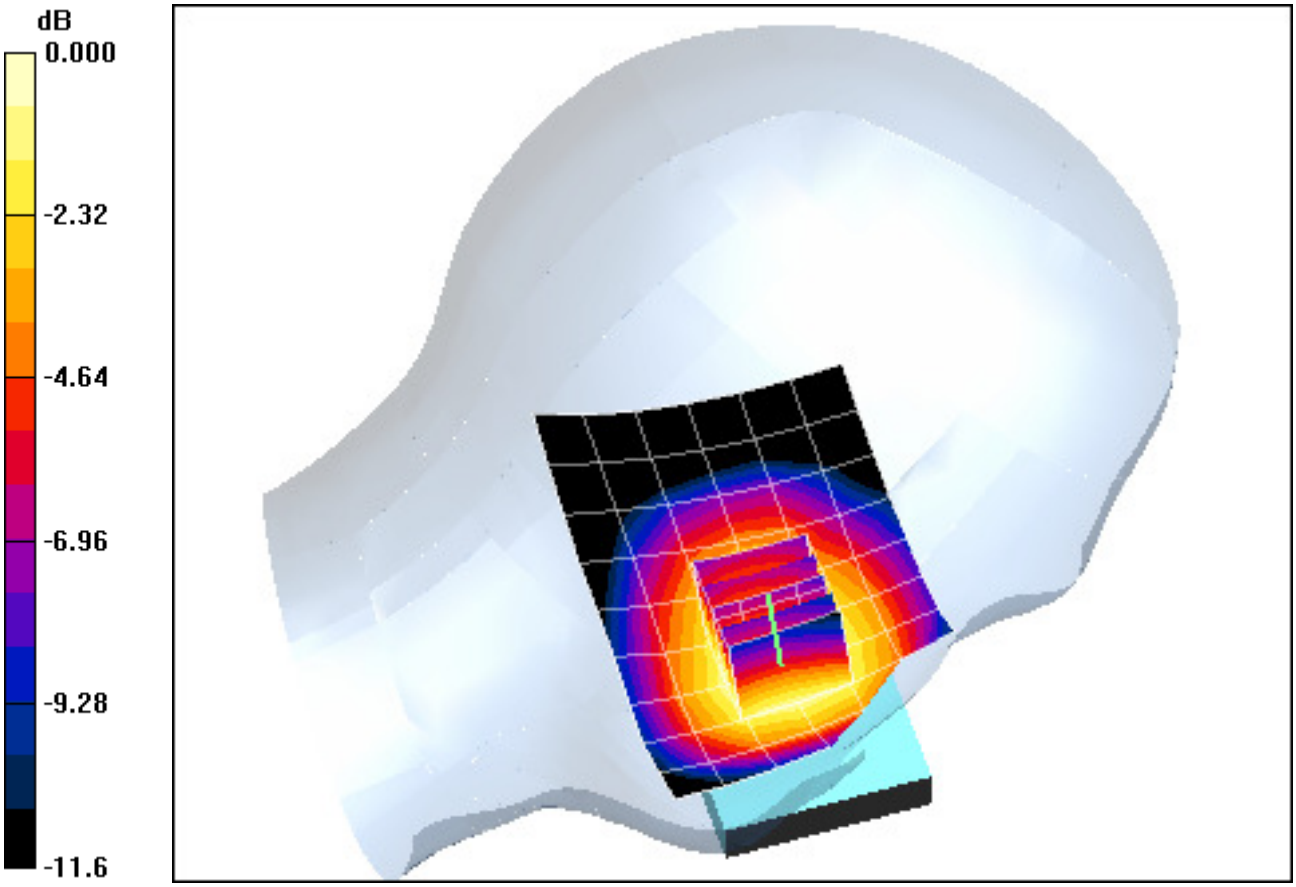

0 dB = 0.321mW/g

PCTEST ENGINEERING LABORATORY, INC.

DUT: A3LGTS5830L; Type: 850/1900 GSM/GPRS/EDGE/WCDMA Phone with Bluetooth and WLAN; Serial: FH-293-A

Communication System: WCDMA850; Frequency: 836.6 MHz;Duty Cycle: 1:1
Medium: 835 Head Medium parameters used (interpolated):
f = 836.6 MHz; σ = 0.903 mho/m; ε_r = 41.6; ρ = 1000 kg/m^3
Phantom section: Left Section

Test Date: 01-03-2011; Ambient Temp: 23.6 °C; Tissue Temp: 21.8 °C

Probe: EX3DV4 - SN3550; ConvF(8.28, 8.28, 8.28); Calibrated: 1/26/2010
Sensor-Surface: 4mm (Mechanical Surface Detection)
Electronics: DAE4 Sn649; Calibrated: 1/22/2010
Phantom: SAM Main; Type: SAM 4.0; Serial: TP-1114
Measurement SW: DASY4, V4.7 Build 80; Postprocessing SW: SEMCAD, V1.8 Build 186

Mode: WCDMA 850, Left Head, Tilt, Mid.ch

Area Scan (7x10x1): Measurement grid: dx=15mm, dy=15mm
Zoom Scan (5x5x7)/Cube 0: Measurement grid: dx=8mm, dy=8mm, dz=5mm
Reference Value = 14.1 V/m
Peak SAR (extrapolated) = 0.219 W/kg
SAR(1 g) = 0.172 mW/g; SAR(10 g) = 0.128 mW/g

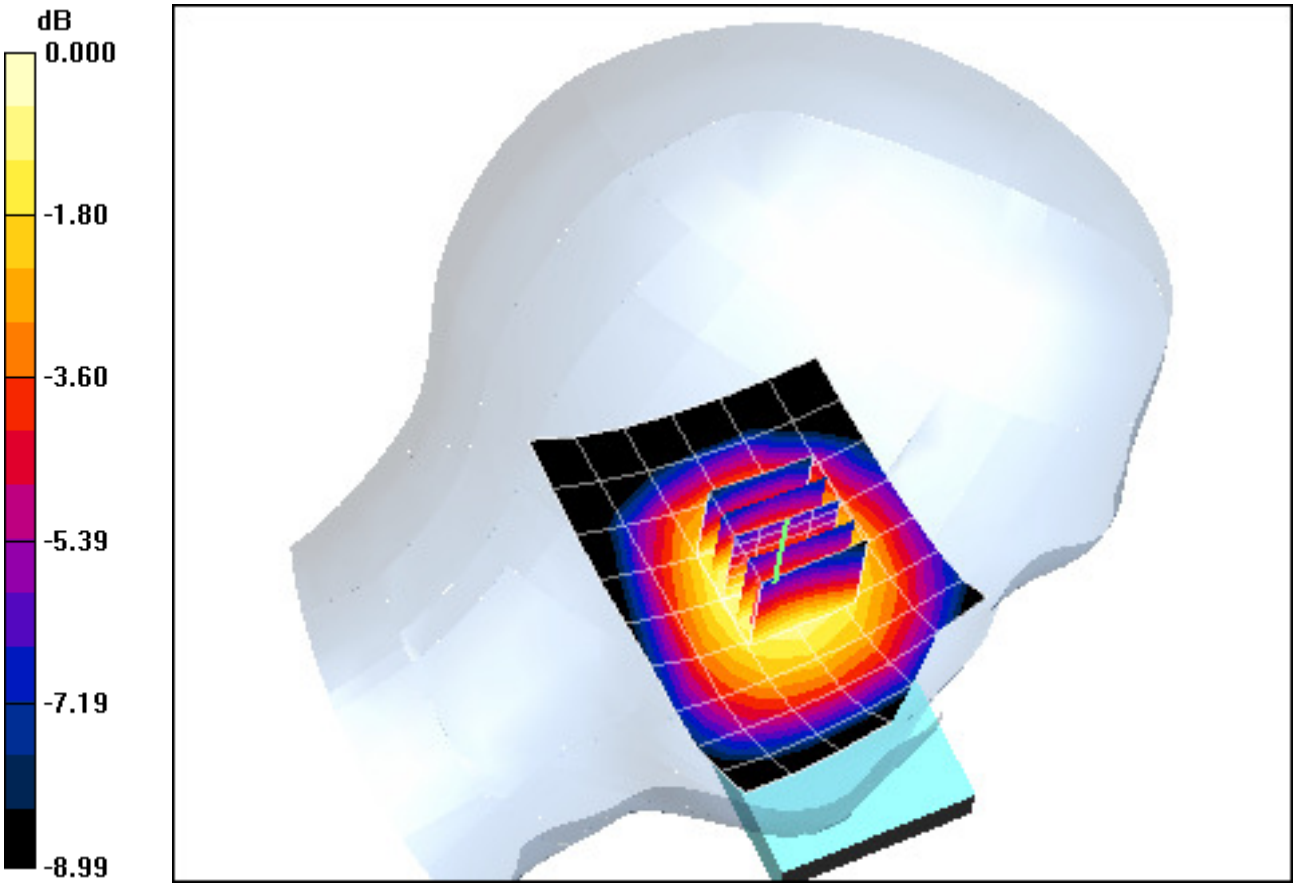

0 dB = 0.181mW/g

PCTEST ENGINEERING LABORATORY, INC.

DUT: A3LGTS5830L; Type: 850/1900 GSM/GPRS/EDGE/WCDMA Phone with Bluetooth and WLAN; Serial: FH-293-A

Communication System: WCDMA1900; Frequency: 1907.6 MHz;Duty Cycle: 1:1
Medium: 1900 Head Medium parameters used (interpolated):
f = 1907.6 MHz; σ = 1.43 mho/m; ε_r = 40.9; ρ = 1000 kg/m^3
Phantom section: Right Section

Test Date: 01-04-2011; Ambient Temp: 22.4 °C; Tissue Temp: 21.8 °C

Probe: EX3DV4 - SN3561; ConvF(6.69, 6.69, 6.69); Calibrated: 8/19/2010
Sensor-Surface: 4mm (Mechanical Surface Detection)
Electronics: DAE4 Sn665; Calibrated: 4/21/2010
Phantom: SAM with CRP; Type: SAM; Serial: TP1375
Measurement SW: DASY4, V4.7 Build 80; Postprocessing SW: SEMCAD, V1.8 Build 186

Mode: WCDMA 1900, Right Head, Touch, High ch

Area Scan (7x10x1): Measurement grid: dx=15mm, dy=15mm
Zoom Scan (5x5x7)/Cube 0: Measurement grid: dx=8mm, dy=8mm, dz=5mm
Reference Value = 25.6 V/m
Peak SAR (extrapolated) = 1.66 W/kg
SAR(1 g) = 0.959 mW/g; SAR(10 g) = 0.523 mW/g

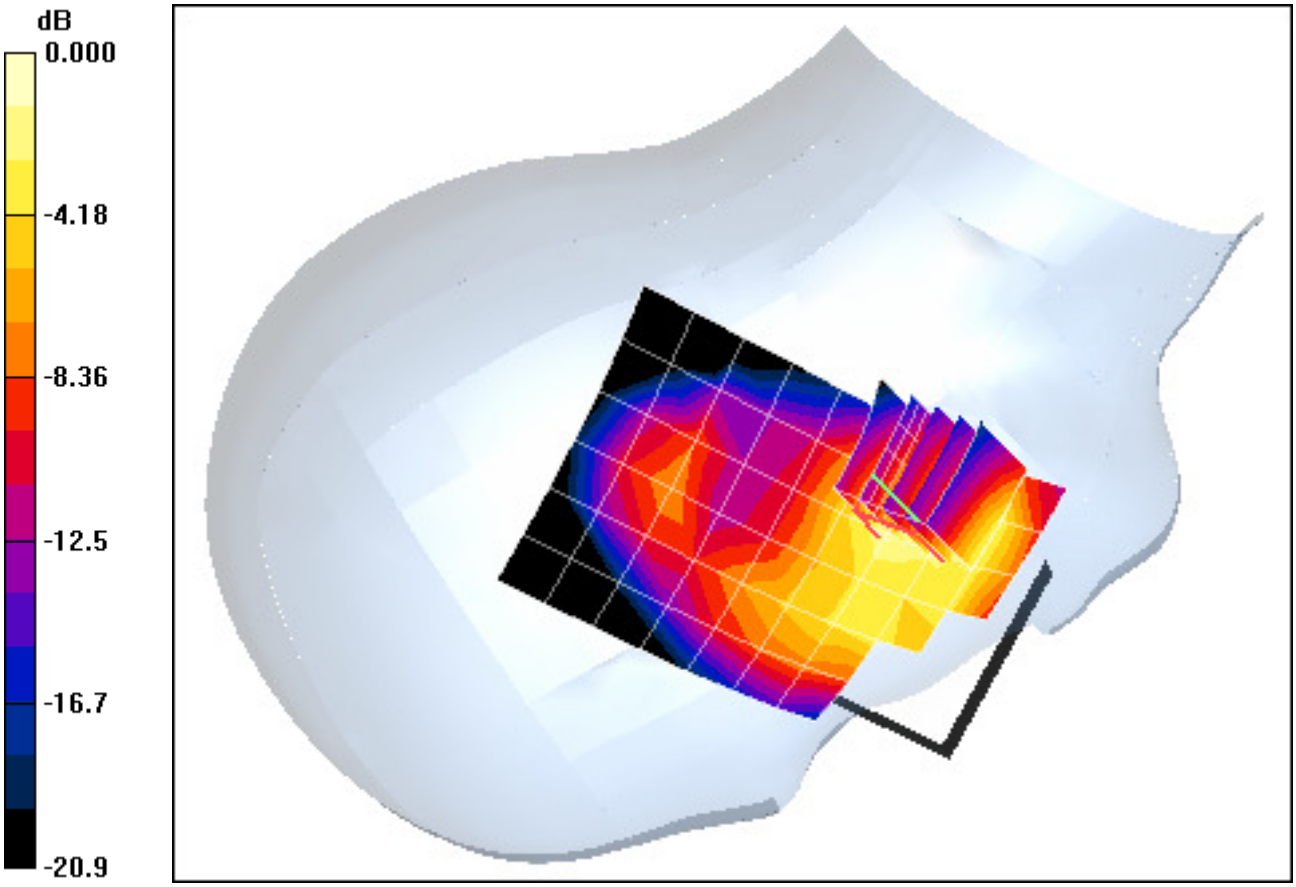

0 dB = 1.02mW/g

PCTEST ENGINEERING LABORATORY, INC.

DUT: A3LGTS5830L; Type: 850/1900 GSM/GPRS/EDGE/WCDMA Phone with Bluetooth and WLAN; Serial: FH-293-A

Communication System: WCDMA1900; Frequency: 1907.6 MHz;Duty Cycle: 1:1
Medium: 1900 Head Medium parameters used (interpolated):
f = 1907.6 MHz; σ = 1.43 mho/m; ε_r = 40.9; ρ = 1000 kg/m^3
Phantom section: Right Section

Test Date: 01-04-2011; Ambient Temp: 22.4 °C; Tissue Temp: 21.8 °C

Probe: EX3DV4 - SN3561; ConvF(6.69, 6.69, 6.69); Calibrated: 8/19/2010
Sensor-Surface: 4mm (Mechanical Surface Detection)
Electronics: DAE4 Sn665; Calibrated: 4/21/2010
Phantom: SAM with CRP; Type: SAM; Serial: TP1375
Measurement SW: DASY4, V4.7 Build 80; Postprocessing SW: SEMCAD, V1.8 Build 186

Mode: WCDMA 1900, Right Head, Touch, High ch

Area Scan (7x10x1): Measurement grid: dx=15mm, dy=15mm
Zoom Scan (5x5x7)/Cube 0: Measurement grid: dx=8mm, dy=8mm, dz=5mm
Reference Value = 25.6 V/m
Peak SAR (extrapolated) = 1.66 W/kg
SAR(1 g) = 0.959 mW/g; SAR(10 g) = 0.523 mW/g

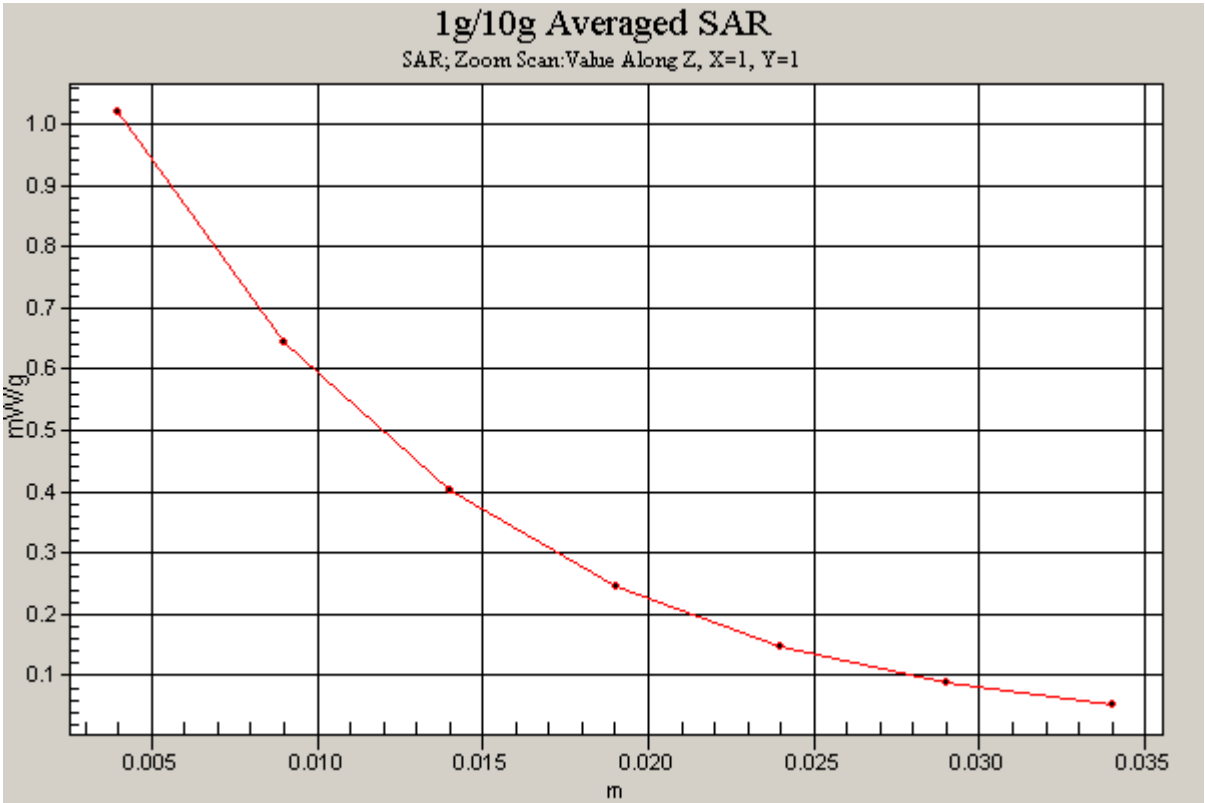

PCTEST ENGINEERING LABORATORY, INC.

DUT: A3LGTS5830L; Type: 850/1900 GSM/GPRS/EDGE/WCDMA Phone with Bluetooth and WLAN; Serial: FH-293-A

Communication System: WCDMA1900; Frequency: 1880 MHz;Duty Cycle: 1:1
Medium: 1900 Head Medium parameters used:
f = 1880 MHz; σ = 1.38 mho/m; ε_r = 41.1; ρ = 1000 kg/m^3
Phantom section: Right Section

Test Date: 01-04-2011; Ambient Temp: 22.4 °C; Tissue Temp: 21.8 °C

Probe: EX3DV4 - SN3561; ConvF(6.69, 6.69, 6.69); Calibrated: 8/19/2010
Sensor-Surface: 4mm (Mechanical Surface Detection)
Electronics: DAE4 Sn665; Calibrated: 4/21/2010
Phantom: SAM with CRP; Type: SAM; Serial: TP1375
Measurement SW: DASY4, V4.7 Build 80; Postprocessing SW: SEMCAD, V1.8 Build 186

Mode: WCDMA 1900, Right Head, Tilt, Mid.ch

Area Scan (7x10x1): Measurement grid: dx=15mm, dy=15mm
Zoom Scan (5x5x7)/Cube 0: Measurement grid: dx=8mm, dy=8mm, dz=5mm
Reference Value = 15.5 V/m
Peak SAR (extrapolated) = 0.586 W/kg
SAR(1 g) = 0.342 mW/g; SAR(10 g) = 0.182 mW/g

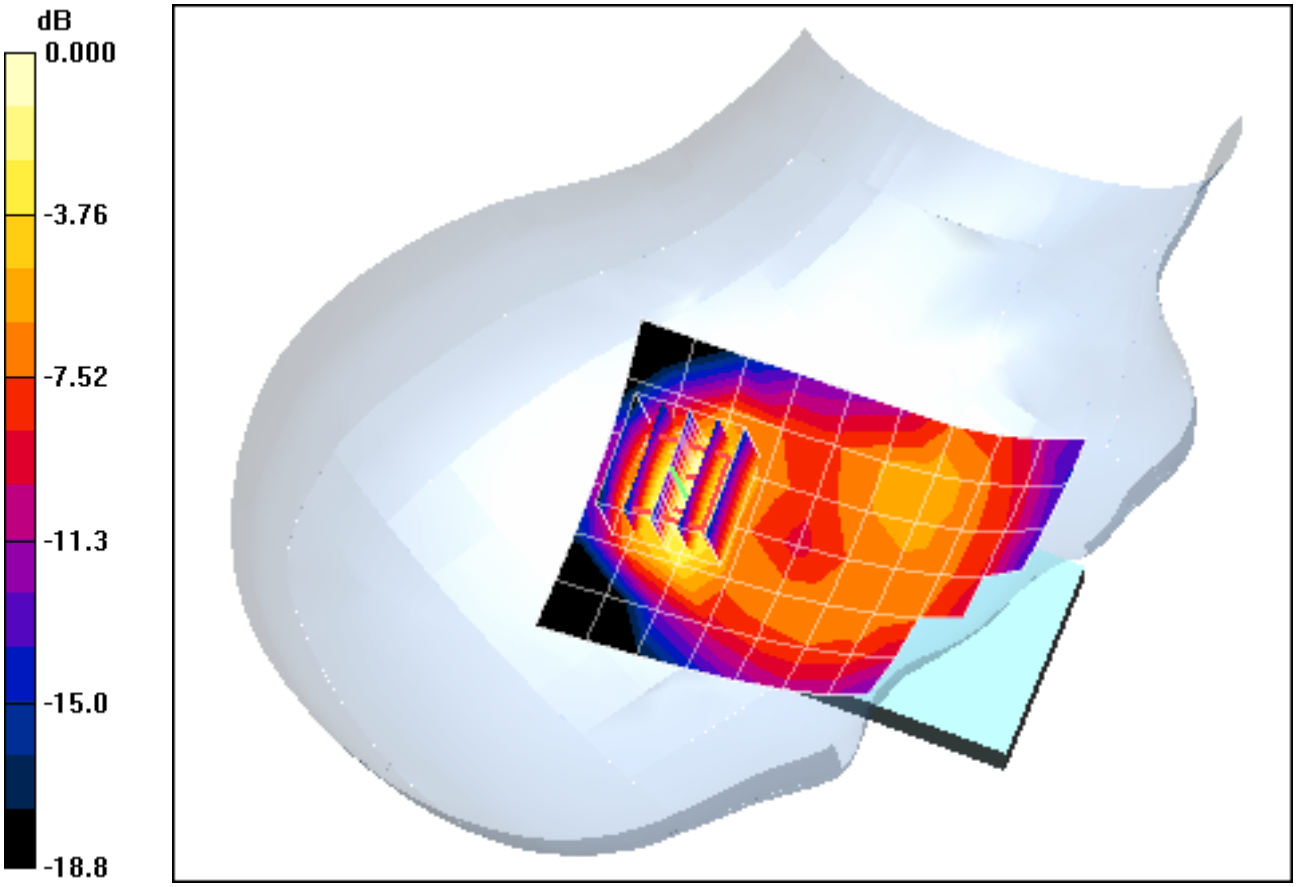

0 dB = 0.384mW/g

PCTEST ENGINEERING LABORATORY, INC.

DUT: A3LGTS5830L; Type: 850/1900 GSM/GPRS/EDGE/WCDMA Phone with Bluetooth and WLAN; Serial: FH-293-A

Communication System: WCDMA1900; Frequency: 1880 MHz;Duty Cycle: 1:1
Medium: 1900 Head Medium parameters used:
f = 1880 MHz; σ = 1.38 mho/m; ε_r = 41.1; ρ = 1000 kg/m^3
Phantom section: Left Section

Test Date: 01-04-2011; Ambient Temp: 22.4 °C; Tissue Temp: 21.8 °C

Probe: EX3DV4 - SN3561; ConvF(6.69, 6.69, 6.69); Calibrated: 8/19/2010
Sensor-Surface: 4mm (Mechanical Surface Detection)
Electronics: DAE4 Sn665; Calibrated: 4/21/2010
Phantom: SAM with CRP; Type: SAM; Serial: TP1375
Measurement SW: DASY4, V4.7 Build 80; Postprocessing SW: SEMCAD, V1.8 Build 186

Mode: WCDMA 1900, Left Head, Touch, Mid.ch

Area Scan (7x10x1): Measurement grid: dx=15mm, dy=15mm
Zoom Scan (5x5x7)/Cube 0: Measurement grid: dx=8mm, dy=8mm, dz=5mm
Reference Value = 12.5 V/m
Peak SAR (extrapolated) = 1.02 W/kg
SAR(1 g) = 0.645 mW/g; SAR(10 g) = 0.383 mW/g

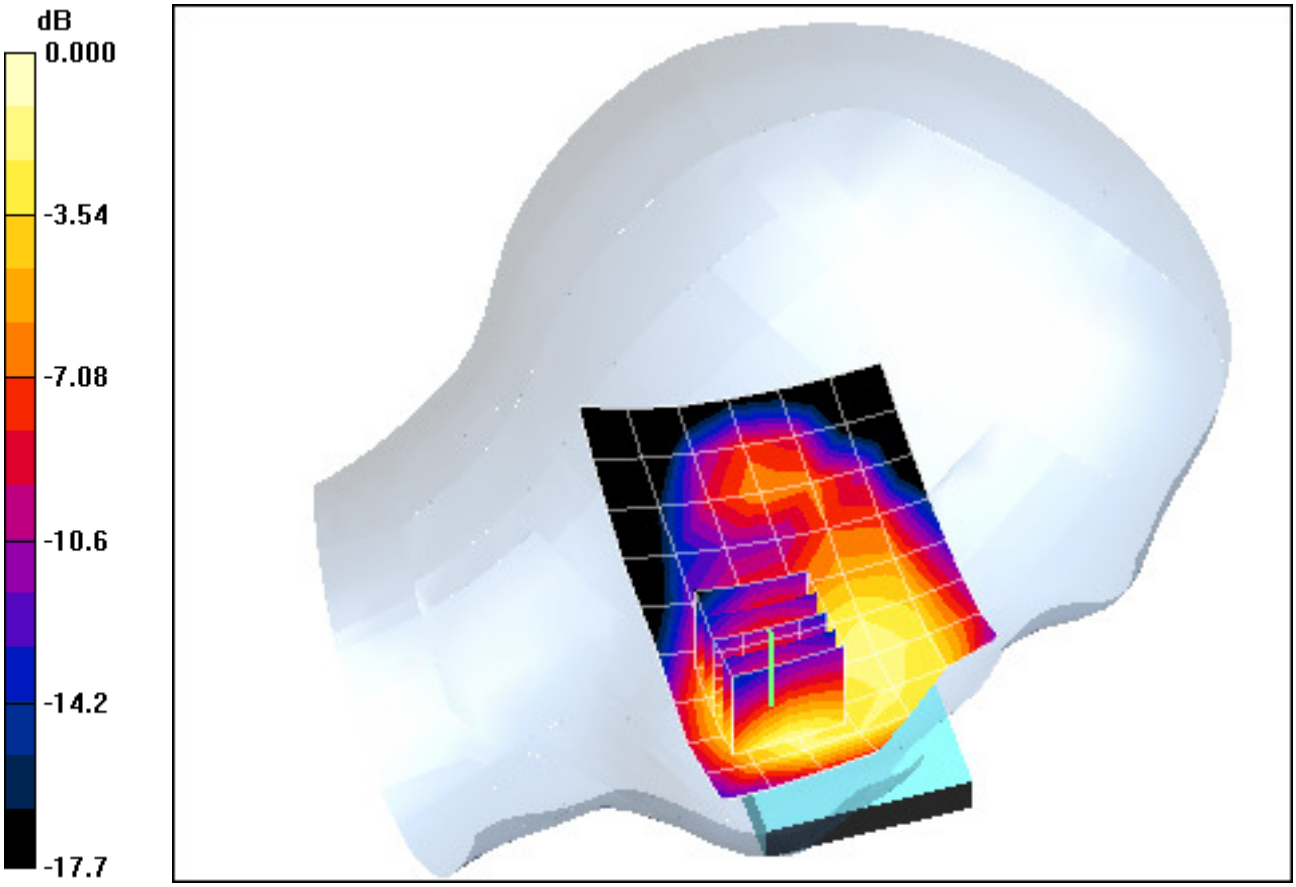

0 dB = 0.700mW/g

PCTEST ENGINEERING LABORATORY, INC.

DUT: A3LGTS5830L; Type: 850/1900 GSM/GPRS/EDGE/WCDMA Phone with Bluetooth and WLAN; Serial: FH-293-A

Communication System: WCDMA1900; Frequency: 1880 MHz;Duty Cycle: 1:1
Medium: 1900 Head Medium parameters used:
f = 1880 MHz; σ = 1.38 mho/m; ε_r = 41.1; ρ = 1000 kg/m^3
Phantom section: Left Section

Test Date: 01-04-2011; Ambient Temp: 22.4 °C; Tissue Temp: 21.8 °C

Probe: EX3DV4 - SN3561; ConvF(6.69, 6.69, 6.69); Calibrated: 8/19/2010
Sensor-Surface: 4mm (Mechanical Surface Detection)
Electronics: DAE4 Sn665; Calibrated: 4/21/2010
Phantom: SAM with CRP; Type: SAM; Serial: TP1375
Measurement SW: DASY4, V4.7 Build 80; Postprocessing SW: SEMCAD, V1.8 Build 186

Mode: WCDMA 1900, Left Head, Tilt, Mid.ch

Area Scan (7x10x1): Measurement grid: dx=15mm, dy=15mm
Zoom Scan (5x5x7)/Cube 0: Measurement grid: dx=8mm, dy=8mm, dz=5mm
Reference Value = 14.8 V/m
Peak SAR (extrapolated) = 0.588 W/kg
SAR(1 g) = 0.340 mW/g; SAR(10 g) = 0.182 mW/g

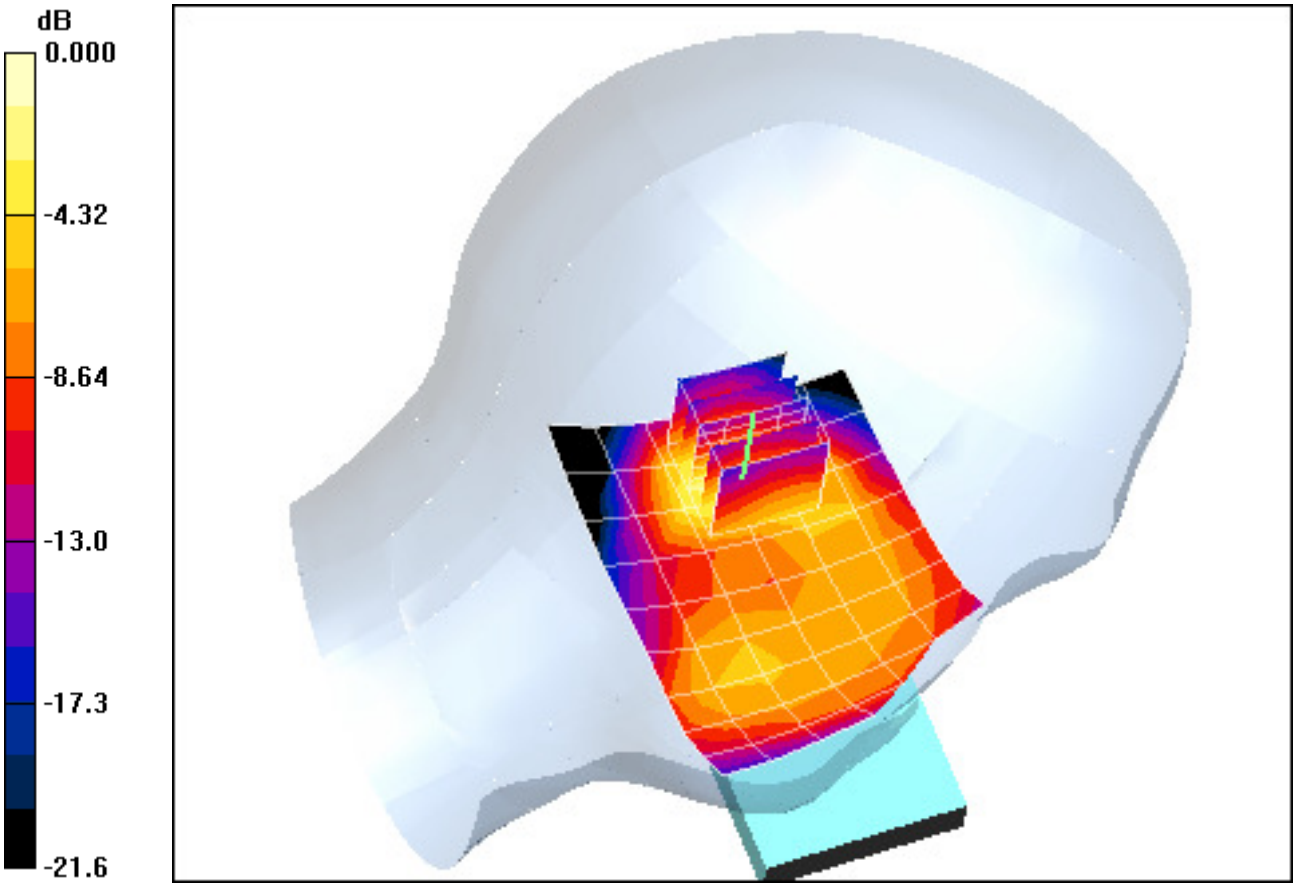

0 dB = 0.385mW/g

PCTEST ENGINEERING LABORATORY, INC.

DUT: A3LGTS5830L; Type: 850/1900 GSM/GPRS/EDGE/WCDMA Phone with Bluetooth and WLAN; Serial: FH-293-A

Communication System: IEEE 802.11b; Frequency: 2412 MHz;Duty Cycle: 1:1
Medium: 2450 Head Medium parameters used (interpolated):
f = 2412 MHz; σ = 1.8 mho/m; ε_r = 39.8; ρ = 1000 kg/m^3
Phantom section: Right Section

Test Date: 01-05-2011; Ambient Temp: 23.3 °C; Tissue Temp: 21.9 °C

Probe: EX3DV4 - SN3561; ConvF(6.11, 6.11, 6.11); Calibrated: 8/19/2010
Sensor-Surface: 3mm (Mechanical Surface Detection)
Electronics: DAE4 Sn665; Calibrated: 4/21/2010
Phantom: SAM with CRP; Type: SAM; Serial: TP1375
Measurement SW: DASY4, V4.7 Build 80; Postprocessing SW: SEMCAD, V1.8 Build 186

Mode: IEEE 802.11b, Right Head, Touch, Ch 01, 1 Mbps

Area Scan (7x12x1): Measurement grid: dx=15mm, dy=15mm
Zoom Scan (5x5x7)/Cube 0: Measurement grid: dx=8mm, dy=8mm, dz=5mm
Reference Value = 3.47 V/m
Peak SAR (extrapolated) = 0.103 W/kg
SAR(1 g) = 0.020 mW/g; SAR(10 g) = 0.00503 mW/g

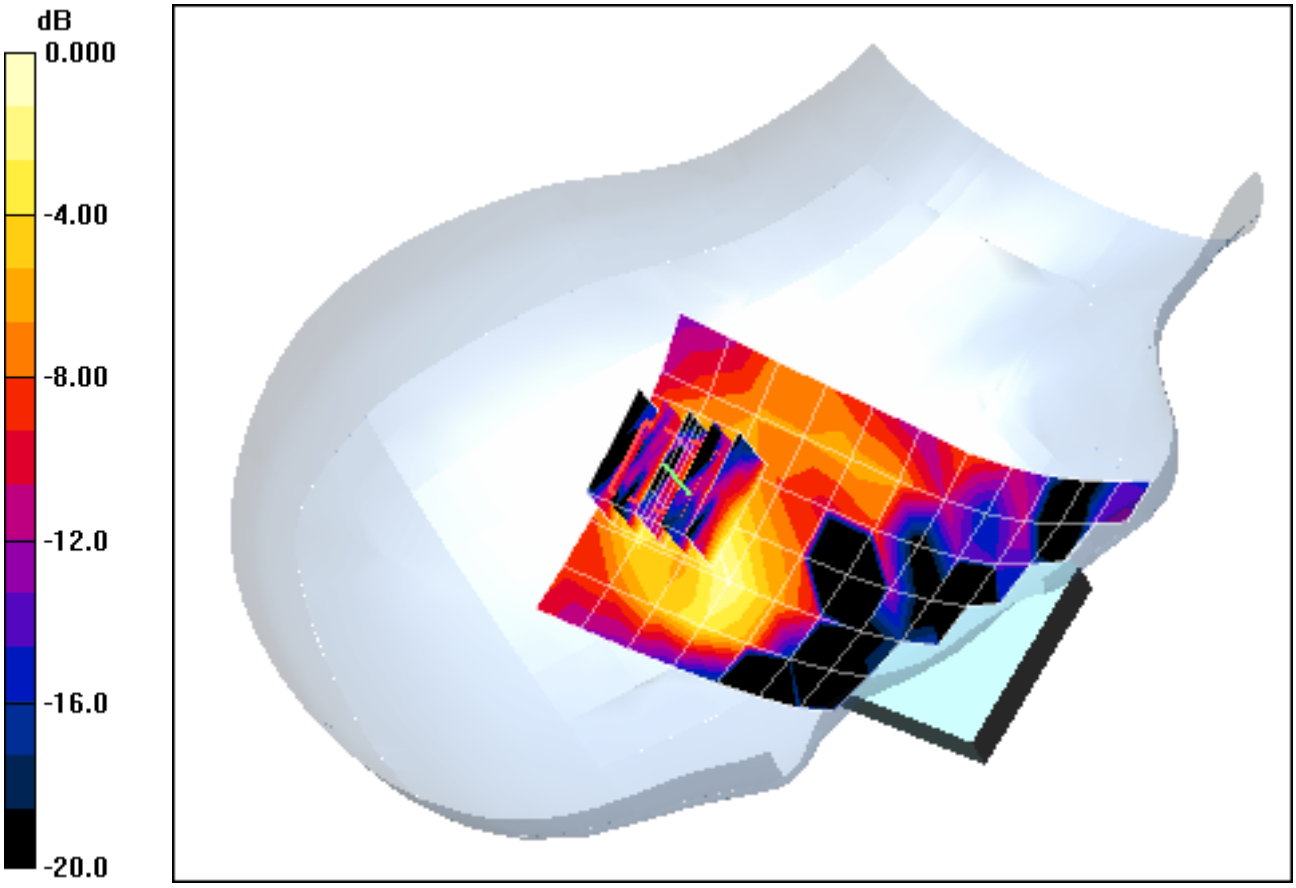

0 dB = 0.029mW/g

PCTEST ENGINEERING LABORATORY, INC.

DUT: A3LGTS5830L; Type: 850/1900 GSM/GPRS/EDGE/WCDMA Phone with Bluetooth and WLAN; Serial: FH-293-A

Communication System: IEEE 802.11b; Frequency: 2412 MHz;Duty Cycle: 1:1
Medium: 2450 Head Medium parameters used (interpolated):
f = 2412 MHz; σ = 1.8 mho/m; ε_r = 39.8; ρ = 1000 kg/m^3
Phantom section: Right Section

Test Date: 01-05-2011; Ambient Temp: 23.3 °C; Tissue Temp: 21.9 °C

Probe: EX3DV4 - SN3561; ConvF(6.11, 6.11, 6.11); Calibrated: 8/19/2010
Sensor-Surface: 3mm (Mechanical Surface Detection)
Electronics: DAE4 Sn665; Calibrated: 4/21/2010
Phantom: SAM with CRP; Type: SAM; Serial: TP1375
Measurement SW: DASY4, V4.7 Build 80; Postprocessing SW: SEMCAD, V1.8 Build 186

Mode: IEEE 802.11b, Right Head, Tilt, Ch 01, 1 Mbps

Area Scan (7x12x1): Measurement grid: dx=15mm, dy=15mm
Zoom Scan (5x5x7)/Cube 0: Measurement grid: dx=8mm, dy=8mm, dz=5mm
Reference Value = 3.40 V/m
Peak SAR (extrapolated) = 0.042 W/kg
SAR(1 g) = 0.020 mW/g; SAR(10 g) = 0.00867 mW/g

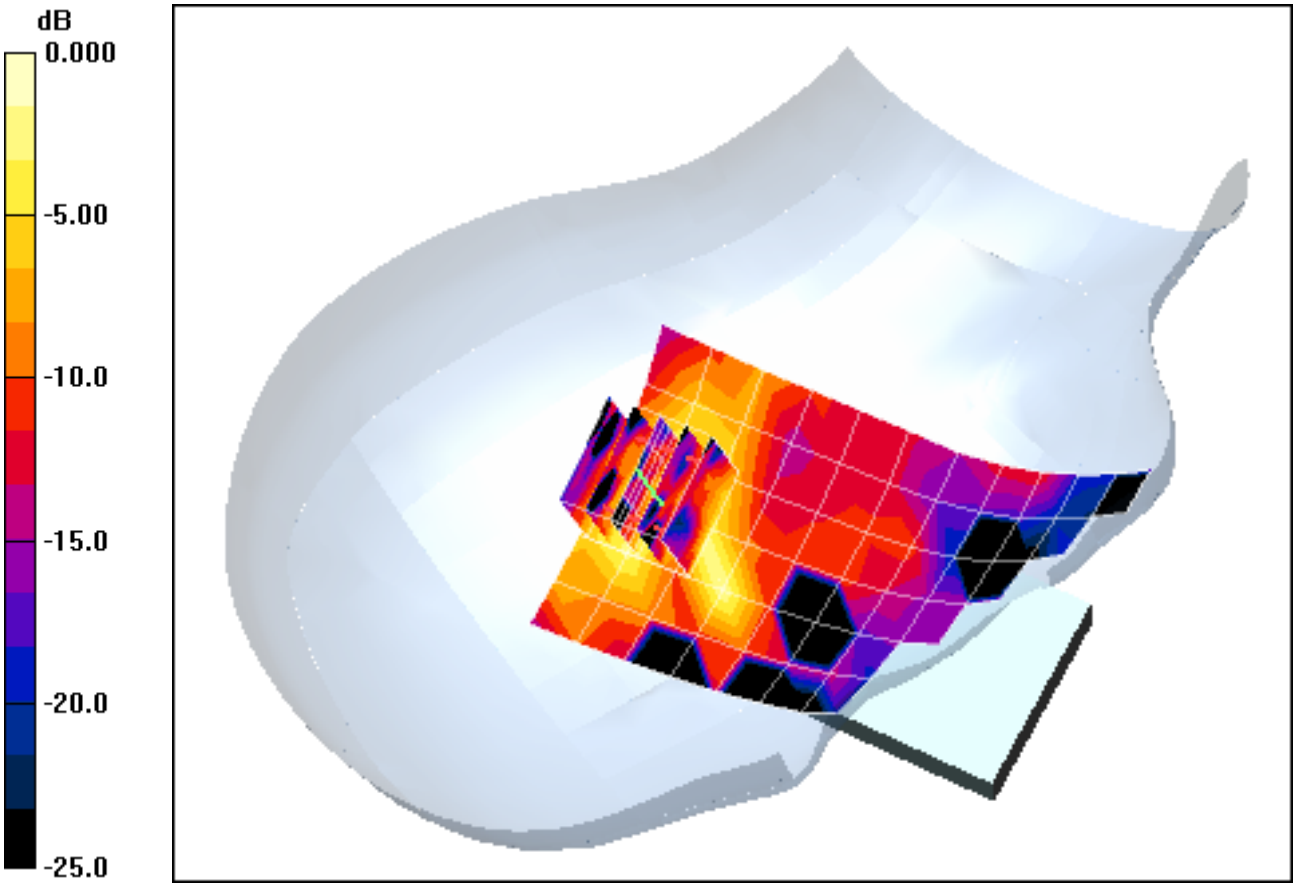

0 dB = 0.026mW/g

PCTEST ENGINEERING LABORATORY, INC.

DUT: A3LGTS5830L; Type: 850/1900 GSM/GPRS/EDGE/WCDMA Phone with Bluetooth and WLAN; Serial: FH-293-A

Communication System: IEEE 802.11b; Frequency: 2412 MHz;Duty Cycle: 1:1
Medium: 2450 Head Medium parameters used (interpolated):
f = 2412 MHz; σ = 1.8 mho/m; ε_r = 39.8; ρ = 1000 kg/m^3
Phantom section: Left Section

Test Date: 01-05-2011; Ambient Temp: 23.3 °C; Tissue Temp: 21.9 °C

Probe: EX3DV4 - SN3561; ConvF(6.11, 6.11, 6.11); Calibrated: 8/19/2010
Sensor-Surface: 3mm (Mechanical Surface Detection)
Electronics: DAE4 Sn665; Calibrated: 4/21/2010
Phantom: SAM with CRP; Type: SAM; Serial: TP1375
Measurement SW: DASY4, V4.7 Build 80; Postprocessing SW: SEMCAD, V1.8 Build 186

Mode: IEEE 802.11b, Left Head, Touch, Ch 01, 1 Mbps

Area Scan (7x12x1): Measurement grid: dx=15mm, dy=15mm
Zoom Scan (5x5x7)/Cube 0: Measurement grid: dx=8mm, dy=8mm, dz=5mm
Reference Value = 1.42 V/m
Peak SAR (extrapolated) = 0.246 W/kg
SAR(1 g) = 0.039 mW/g; SAR(10 g) = 0.00786 mW/g

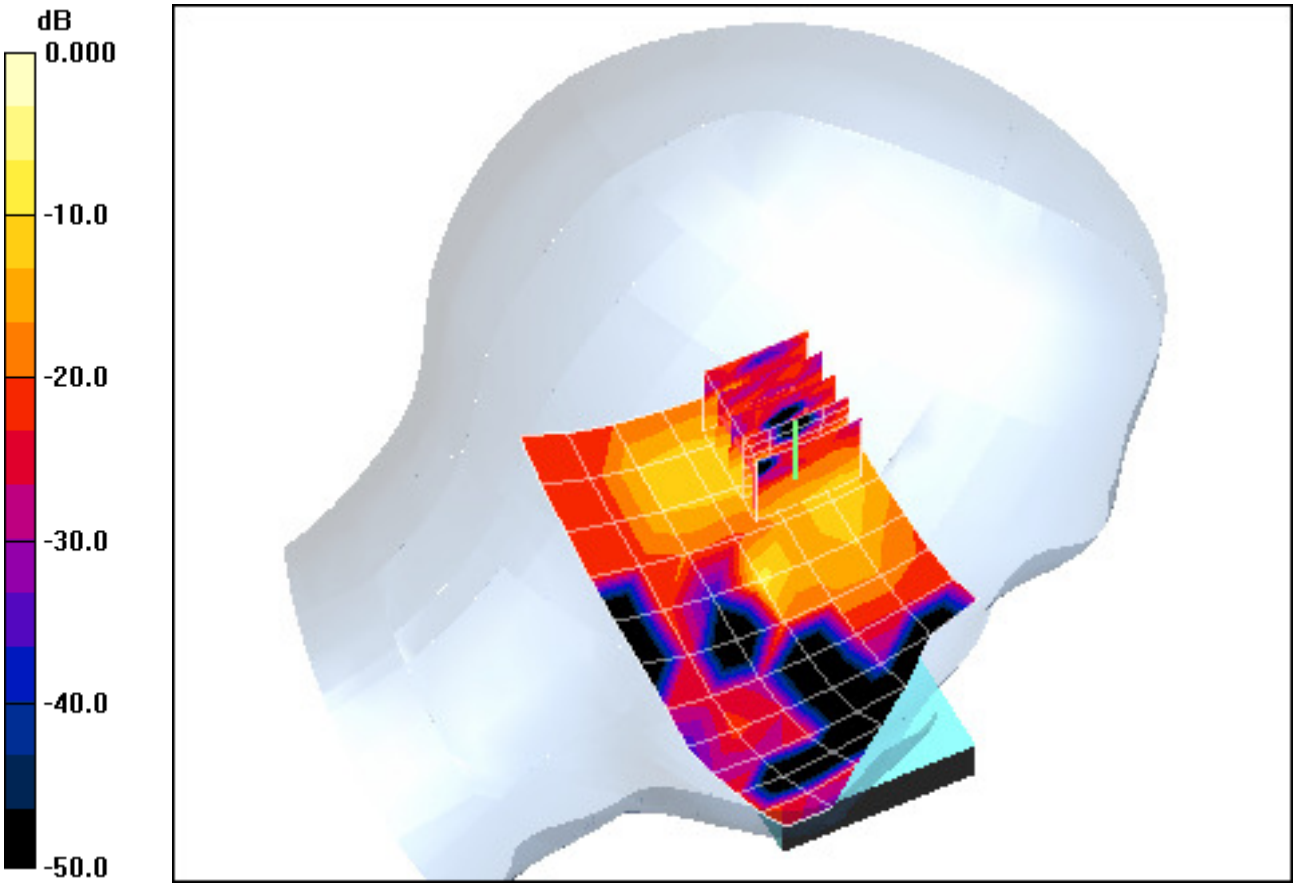

0 dB = 0.246mW/g

PCTEST ENGINEERING LABORATORY, INC.

DUT: A3LGTS5830L; Type: 850/1900 GSM/GPRS/EDGE/WCDMA Phone with Bluetooth and WLAN; Serial: FH-293-A

Communication System: IEEE 802.11b; Frequency: 2412 MHz;Duty Cycle: 1:1
Medium: 2450 Head Medium parameters used (interpolated):
f = 2412 MHz; σ = 1.8 mho/m; ε_r = 39.8; ρ = 1000 kg/m^3
Phantom section: Left Section

Test Date: 01-05-2011; Ambient Temp: 23.3°C; Tissue Temp: 21.9°C

Probe: EX3DV4 - SN3561; ConvF(6.11, 6.11, 6.11); Calibrated: 8/19/2010
Sensor-Surface: 3mm (Mechanical Surface Detection)
Electronics: DAE4 Sn665; Calibrated: 4/21/2010
Phantom: SAM with CRP; Type: SAM; Serial: TP1375
Measurement SW: DASY4, V4.7 Build 80; Postprocessing SW: SEMCAD, V1.8 Build 186

Mode: IEEE 802.11b, Left Head, Touch, Ch 01, 1 Mbps

Area Scan (7x12x1): Measurement grid: dx=15mm, dy=15mm
Zoom Scan (5x5x7)/Cube 0: Measurement grid: dx=8mm, dy=8mm, dz=5mm
Reference Value = 1.42 V/m
Peak SAR (extrapolated) = 0.246 W/kg
SAR(1 g) = 0.039 mW/g; SAR(10 g) = 0.00786 mW/g

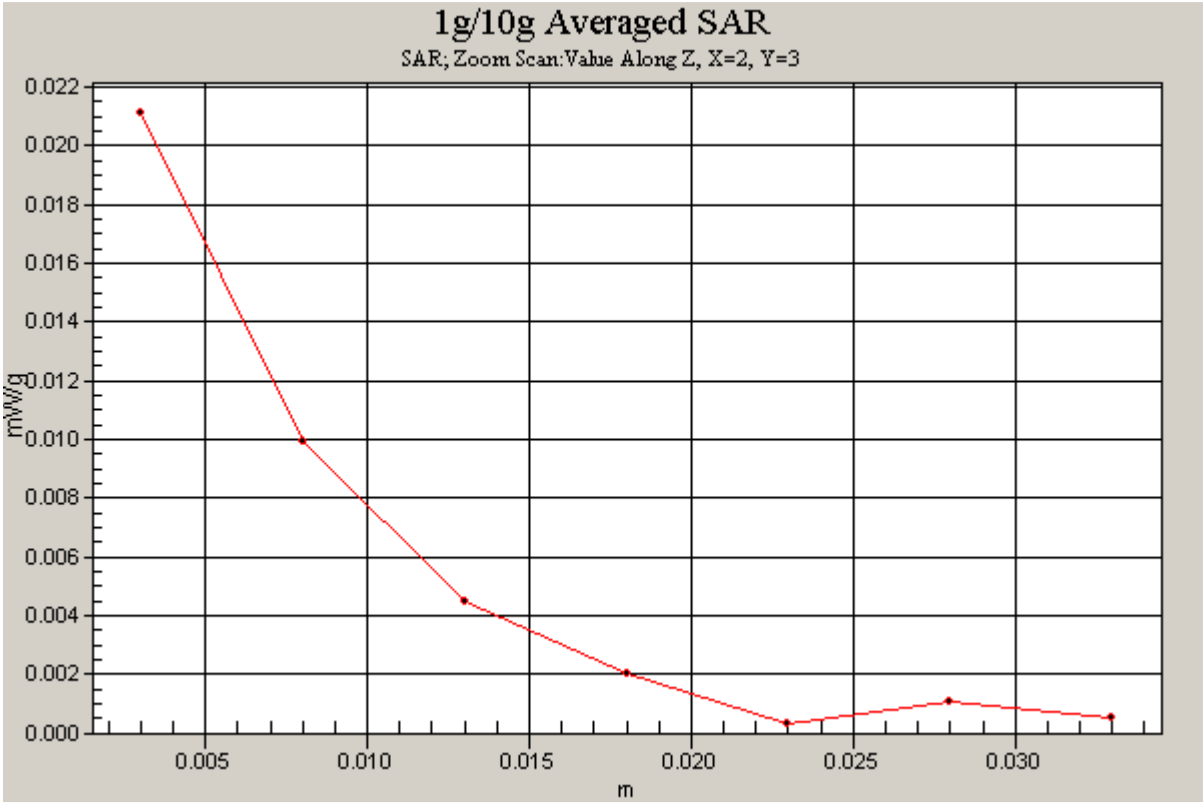

PCTEST ENGINEERING LABORATORY, INC.

DUT: A3LGTS5830L; Type: 850/1900 GSM/GPRS/EDGE/WCDMA Phone with Bluetooth and WLAN; Serial: FH-293-A

Communication System: IEEE 802.11b; Frequency: 2412 MHz;Duty Cycle: 1:1
Medium: 2450 Head Medium parameters used (interpolated):
f = 2412 MHz; σ = 1.8 mho/m; ε_r = 39.8; ρ = 1000 kg/m^3
Phantom section: Left Section

Test Date: 01-05-2011; Ambient Temp: 23.3 °C; Tissue Temp: 21.9 °C

Probe: EX3DV4 - SN3561; ConvF(6.11, 6.11, 6.11); Calibrated: 8/19/2010
Sensor-Surface: 3mm (Mechanical Surface Detection)
Electronics: DAE4 Sn665; Calibrated: 4/21/2010
Phantom: SAM with CRP; Type: SAM; Serial: TP1375
Measurement SW: DASY4, V4.7 Build 80; Postprocessing SW: SEMCAD, V1.8 Build 186

Mode: IEEE 802.11b, Left Head, Tilt, Ch 01, 1 Mbps

Area Scan (7x11x1): Measurement grid: dx=15mm, dy=15mm
Zoom Scan (5x5x7)/Cube 0: Measurement grid: dx=8mm, dy=8mm, dz=5mm
Reference Value = 3.04 V/m
Peak SAR (extrapolated) = 0.065 W/kg
SAR(1 g) = 0.018 mW/g; SAR(10 g) = 0.00581 mW/g

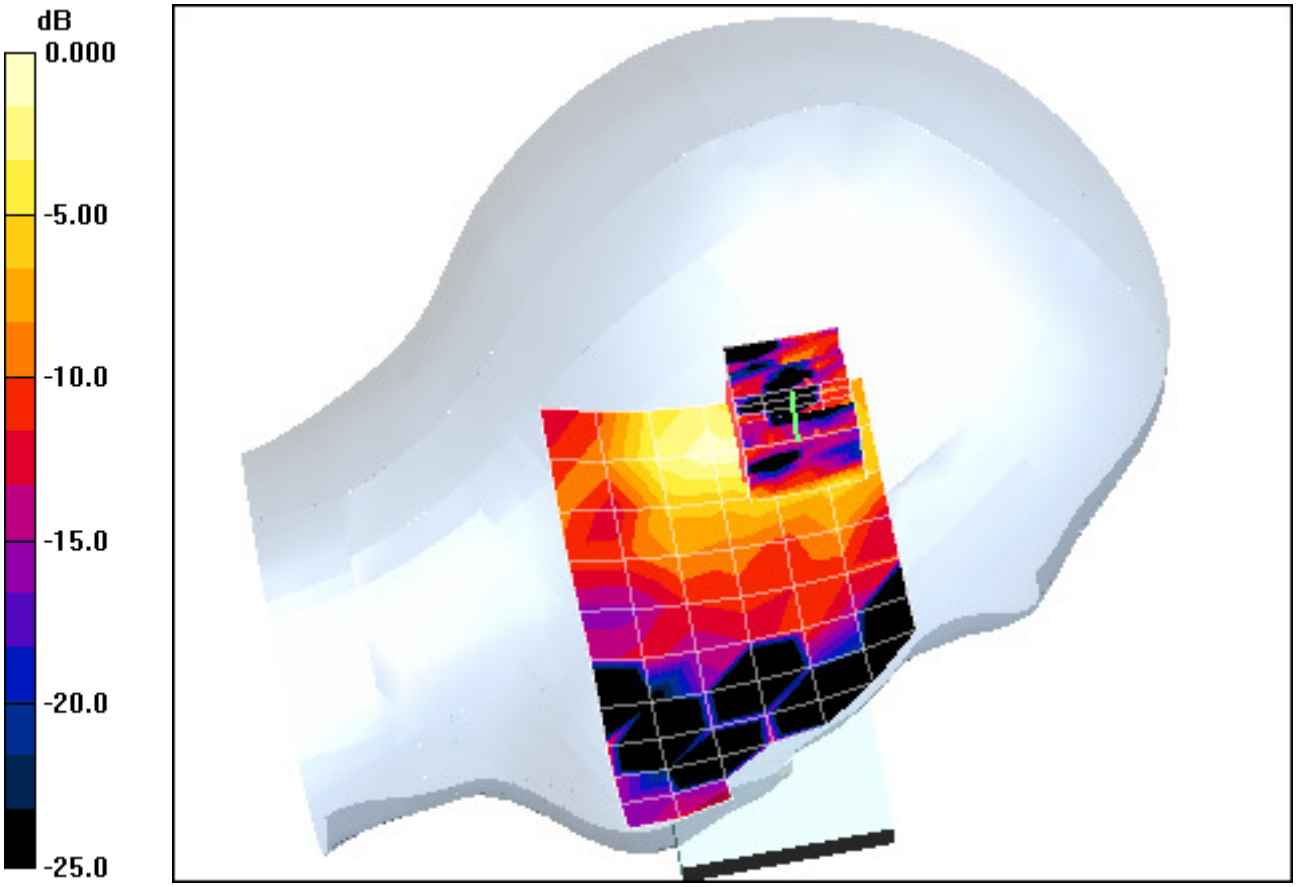

0 dB = 0.024mW/g

PCTEST ENGINEERING LABORATORY, INC.

DUT: A3LGTS5830L; Type: 850/1900 GSM/GPRS/EDGE/WCDMA Phone with Bluetooth and WLAN; Serial: FH-293-A

Communication System: GSM850 GPRS; 2 Tx slots; Frequency: 848.8 MHz;Duty Cycle: 1:4.15
Medium: 835 Body Medium parameters used (interpolated):
f = 848.8 MHz; σ = 0.979 mho/m; ε_r = 53.9; ρ = 1000 kg/m^3
Phantom section: Flat Section; Space: 1.0 cm

Test Date: 01-03-2011; Ambient Temp: 23.1 °C; Tissue Temp: 22.6 °C

Probe: EX3DV4 - SN3550; ConvF(8.3, 8.3, 8.3); Calibrated: 1/26/2010
Sensor-Surface: 4mm (Mechanical Surface Detection)
Electronics: DAE4 Sn649; Calibrated: 1/22/2010
Phantom: SAM Sub; Type: SAM 4.0; Serial: TP-1357
Measurement SW: DASY4, V4.7 Build 80; Postprocessing SW: SEMCAD, V1.8 Build 186

Mode: GPRS 850, Body SAR, Back side, High ch, 2 Tx Slots

Area Scan (7x10x1): Measurement grid: dx=15mm, dy=15mm
Zoom Scan (5x5x7)/Cube 0: Measurement grid: dx=8mm, dy=8mm, dz=5mm
Reference Value = 35.8 V/m
Peak SAR (extrapolated) = 1.63 W/kg
SAR(1 g) = 1.17 mW/g; SAR(10 g) = 0.816 mW/g

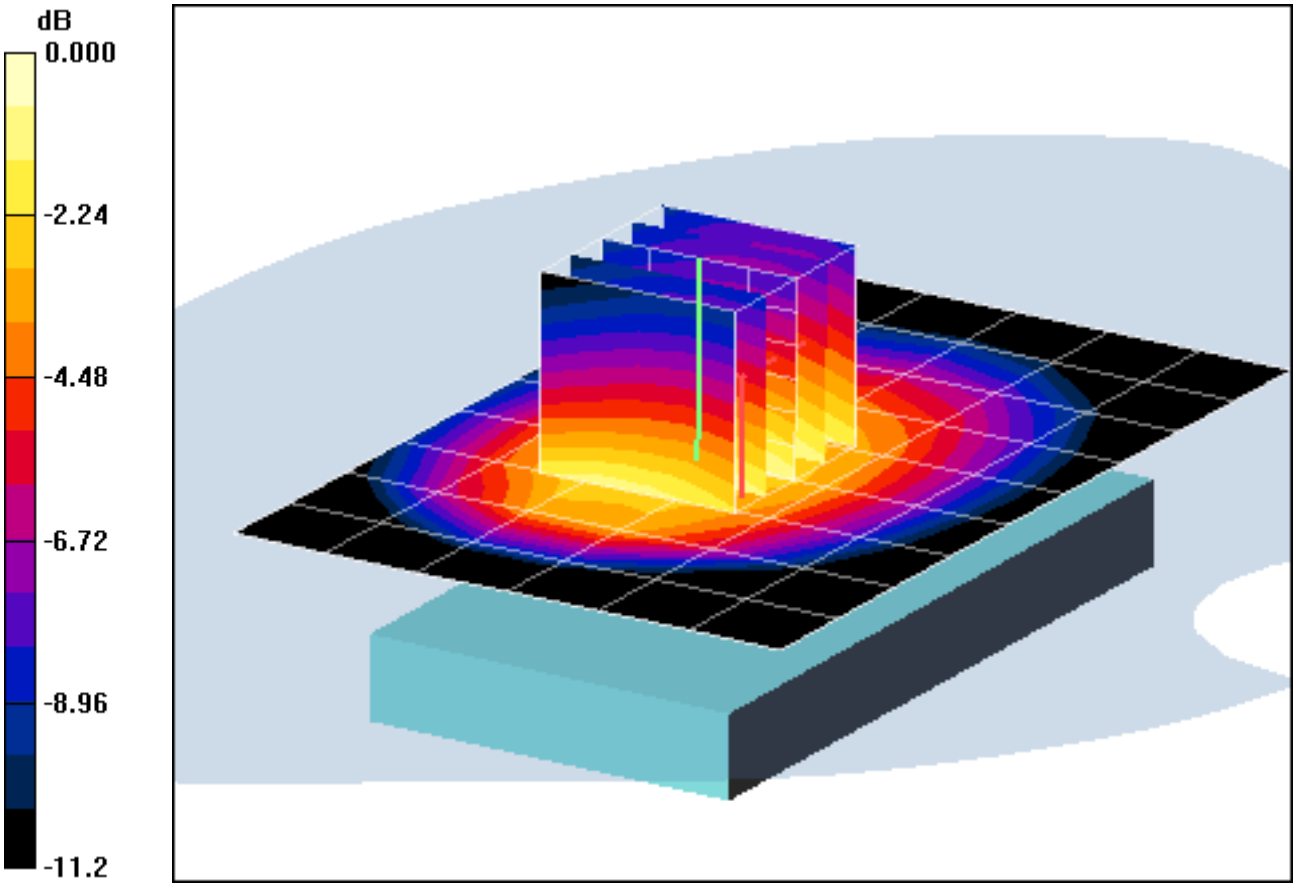

0 dB = 1.25mW/g

PCTEST ENGINEERING LABORATORY, INC.

DUT: A3LGTS5830L; Type: 850/1900 GSM/GPRS/EDGE/WCDMA Phone with Bluetooth and WLAN; Serial: FH-293-A

Communication System: GSM850 GPRS; 2 Tx slots; Frequency: 848.8 MHz;Duty Cycle: 1:4.15
Medium: 835 Body Medium parameters used (interpolated):
f = 848.8 MHz; σ = 0.979 mho/m; ε_r = 53.9; ρ = 1000 kg/m^3
Phantom section: Flat Section; Space: 1.0 cm

Test Date: 01-03-2011; Ambient Temp: 23.1 °C; Tissue Temp: 22.6 °C

Probe: EX3DV4 - SN3550; ConvF(8.3, 8.3, 8.3); Calibrated: 1/26/2010
Sensor-Surface: 4mm (Mechanical Surface Detection)
Electronics: DAE4 Sn649; Calibrated: 1/22/2010
Phantom: SAM Sub; Type: SAM 4.0; Serial: TP-1357
Measurement SW: DASY4, V4.7 Build 80; Postprocessing SW: SEMCAD, V1.8 Build 186

Mode: GPRS 850, Body SAR, Back side, High ch, 2 Tx Slots

Area Scan (7x10x1): Measurement grid: dx=15mm, dy=15mm
Zoom Scan (5x5x7)/Cube 0: Measurement grid: dx=8mm, dy=8mm, dz=5mm
Reference Value = 35.8 V/m
Peak SAR (extrapolated) = 1.63 W/kg
SAR(1 g) = 1.17 mW/g; SAR(10 g) = 0.816 mW/g

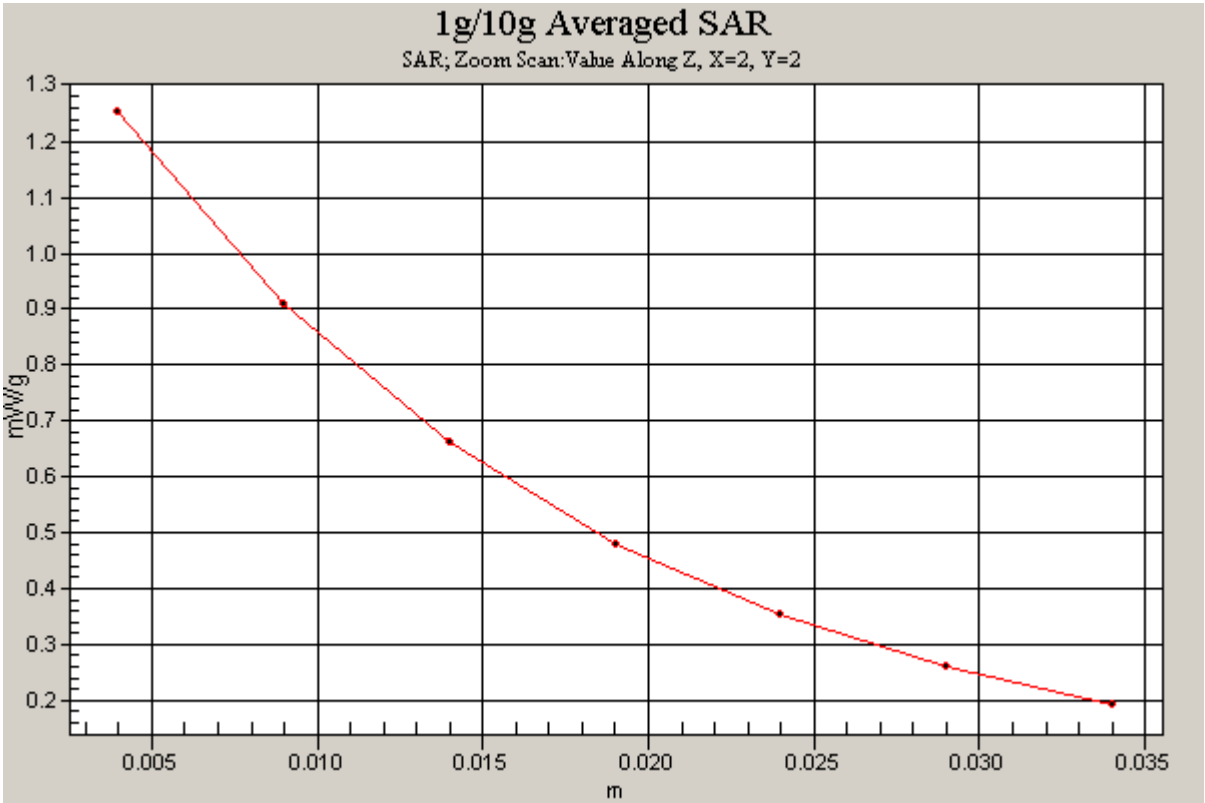

PCTEST ENGINEERING LABORATORY, INC.

DUT: A3LGTS5830L; Type: 850/1900 GSM/GPRS/EDGE/WCDMA Phone with Bluetooth and WLAN; Serial: FH-293-A

Communication System: GSM850 GPRS; 2 Tx slots; Frequency: 836.6 MHz;Duty Cycle: 1:4.15
Medium: 835 Body Medium parameters used (interpolated):
f = 836.6 MHz; σ = 0.968 mho/m; ε_r = 54; ρ = 1000 kg/m^3
Phantom section: Flat Section; Space: 1.0 cm

Test Date: 01-03-2011; Ambient Temp: 23.1 °C; Tissue Temp: 22.6 °C

Probe: EX3DV4 - SN3550; ConvF(8.3, 8.3, 8.3); Calibrated: 1/26/2010
Sensor-Surface: 4mm (Mechanical Surface Detection)
Electronics: DAE4 Sn649; Calibrated: 1/22/2010
Phantom: SAM Sub; Type: SAM 4.0; Serial: TP-1357
Measurement SW: DASY4, V4.7 Build 80; Postprocessing SW: SEMCAD, V1.8 Build 186

Mode: GPRS 850, Body SAR, Front side, Mid.ch, 2 Tx Slots

Area Scan (7x10x1): Measurement grid: dx=15mm, dy=15mm
Zoom Scan (5x5x7)/Cube 0: Measurement grid: dx=8mm, dy=8mm, dz=5mm
Reference Value = 24.6 V/m
Peak SAR (extrapolated) = 0.762 W/kg
SAR(1 g) = 0.576 mW/g; SAR(10 g) = 0.423 mW/g

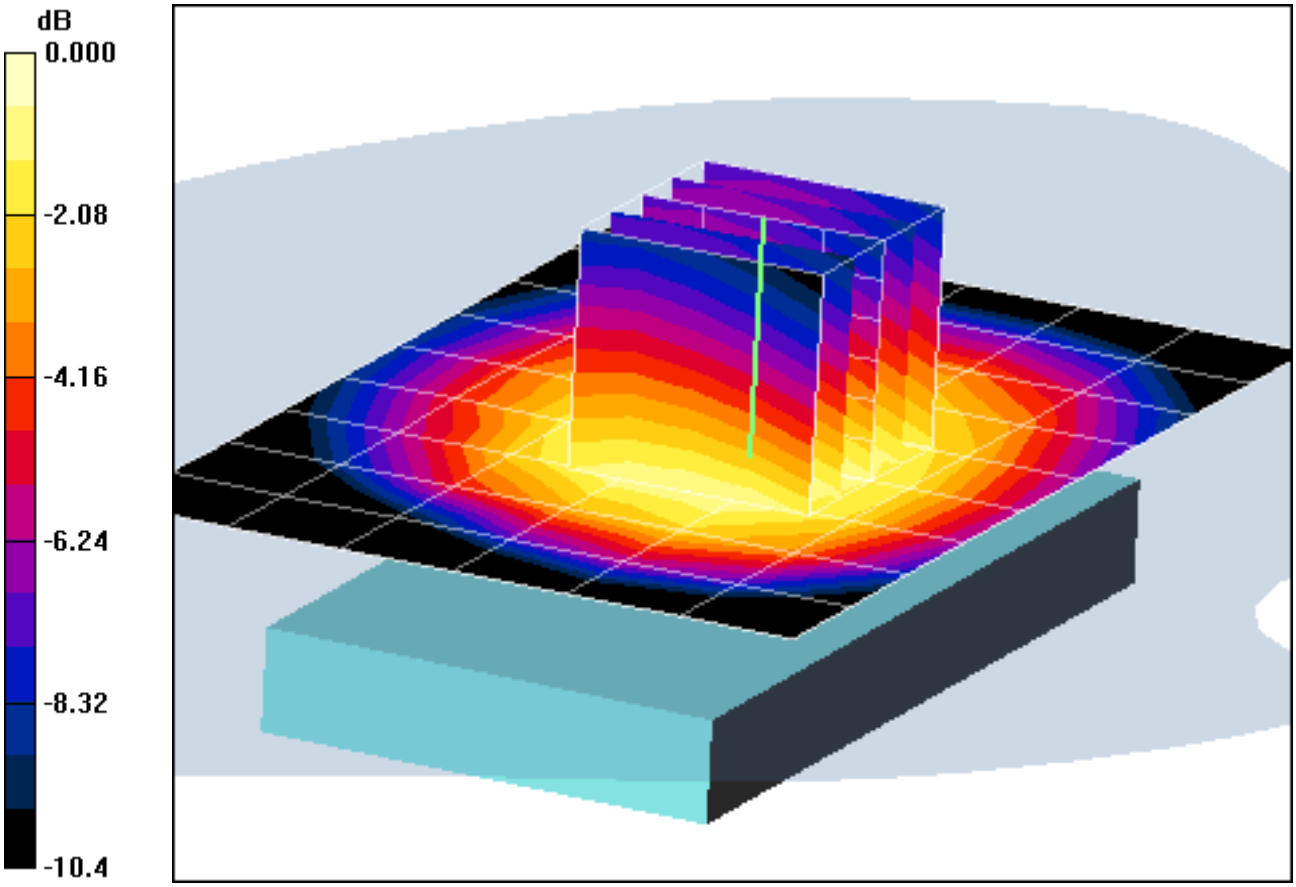

0 dB = 0.607mW/g

PCTEST ENGINEERING LABORATORY, INC.

DUT: A3LGTS5830L; Type: 850/1900 GSM/GPRS/EDGE/WCDMA Phone with Bluetooth and WLAN; Serial: FH-293-A

Communication System: GSM850 GPRS; 2 Tx slots; Frequency: 836.6 MHz;Duty Cycle: 1:4.15
Medium: 835 Body Medium parameters used (interpolated):
f = 836.6 MHz; σ = 0.968 mho/m; ε_r = 54; ρ = 1000 kg/m^3
Phantom section: Flat Section; Space: 1.0 cm

Test Date: 01-03-2011; Ambient Temp: 23.1 °C; Tissue Temp: 22.6 °C

Probe: EX3DV4 - SN3550; ConvF(8.3, 8.3, 8.3); Calibrated: 1/26/2010
Sensor-Surface: 4mm (Mechanical Surface Detection)
Electronics: DAE4 Sn649; Calibrated: 1/22/2010
Phantom: SAM Sub; Type: SAM 4.0; Serial: TP-1357
Measurement SW: DASY4, V4.7 Build 80; Postprocessing SW: SEMCAD, V1.8 Build 186

Mode: GPRS 850, Body SAR, Bottom Edge, Mid.ch, 2 Tx Slots

Area Scan (5x7x1): Measurement grid: dx=15mm, dy=15mm
Zoom Scan (5x5x7)/Cube 0: Measurement grid: dx=8mm, dy=8mm, dz=5mm
Reference Value = 6.17 V/m
Peak SAR (extrapolated) = 0.054 W/kg
SAR(1 g) = 0.035 mW/g; SAR(10 g) = 0.0225 mW/g

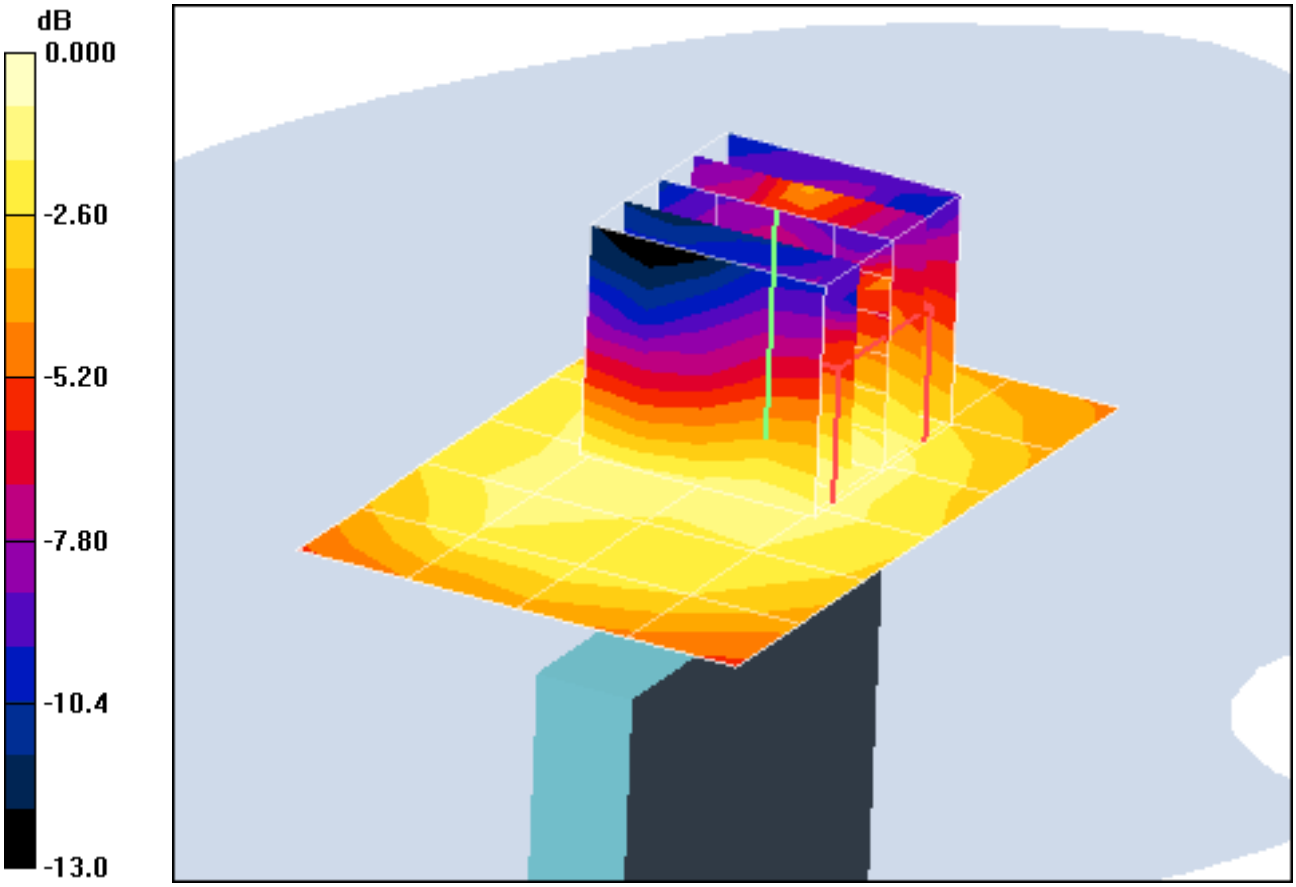

0 dB = 0.038mW/g

PCTEST ENGINEERING LABORATORY, INC.

DUT: A3LGTS5830L; Type: 850/1900 GSM/GPRS/EDGE/WCDMA Phone with Bluetooth and WLAN; Serial: FH-293-A

Communication System: GSM850 GPRS; 2 Tx slots; Frequency: 836.6 MHz;Duty Cycle: 1:4.15
Medium: 835 Body Medium parameters used (interpolated):
f = 836.6 MHz; σ = 0.968 mho/m; ε_r = 54; ρ = 1000 kg/m^3
Phantom section: Flat Section; Space: 1.0 cm

Test Date: 01-03-2011; Ambient Temp: 23.1 °C; Tissue Temp: 22.6 °C

Probe: EX3DV4 - SN3550; ConvF(8.3, 8.3, 8.3); Calibrated: 1/26/2010
Sensor-Surface: 4mm (Mechanical Surface Detection)
Electronics: DAE4 Sn649; Calibrated: 1/22/2010
Phantom: SAM Sub; Type: SAM 4.0; Serial: TP-1357
Measurement SW: DASY4, V4.7 Build 80; Postprocessing SW: SEMCAD, V1.8 Build 186

Mode: GPRS 850, Body SAR, Right Edge, Mid.ch, 2 Tx Slots

Area Scan (5x13x1): Measurement grid: dx=15mm, dy=15mm
Zoom Scan (5x5x7)/Cube 0: Measurement grid: dx=8mm, dy=8mm, dz=5mm
Reference Value = 19.4 V/m
Peak SAR (extrapolated) = 0.509 W/kg
SAR(1 g) = 0.357 mW/g; SAR(10 g) = 0.243 mW/g

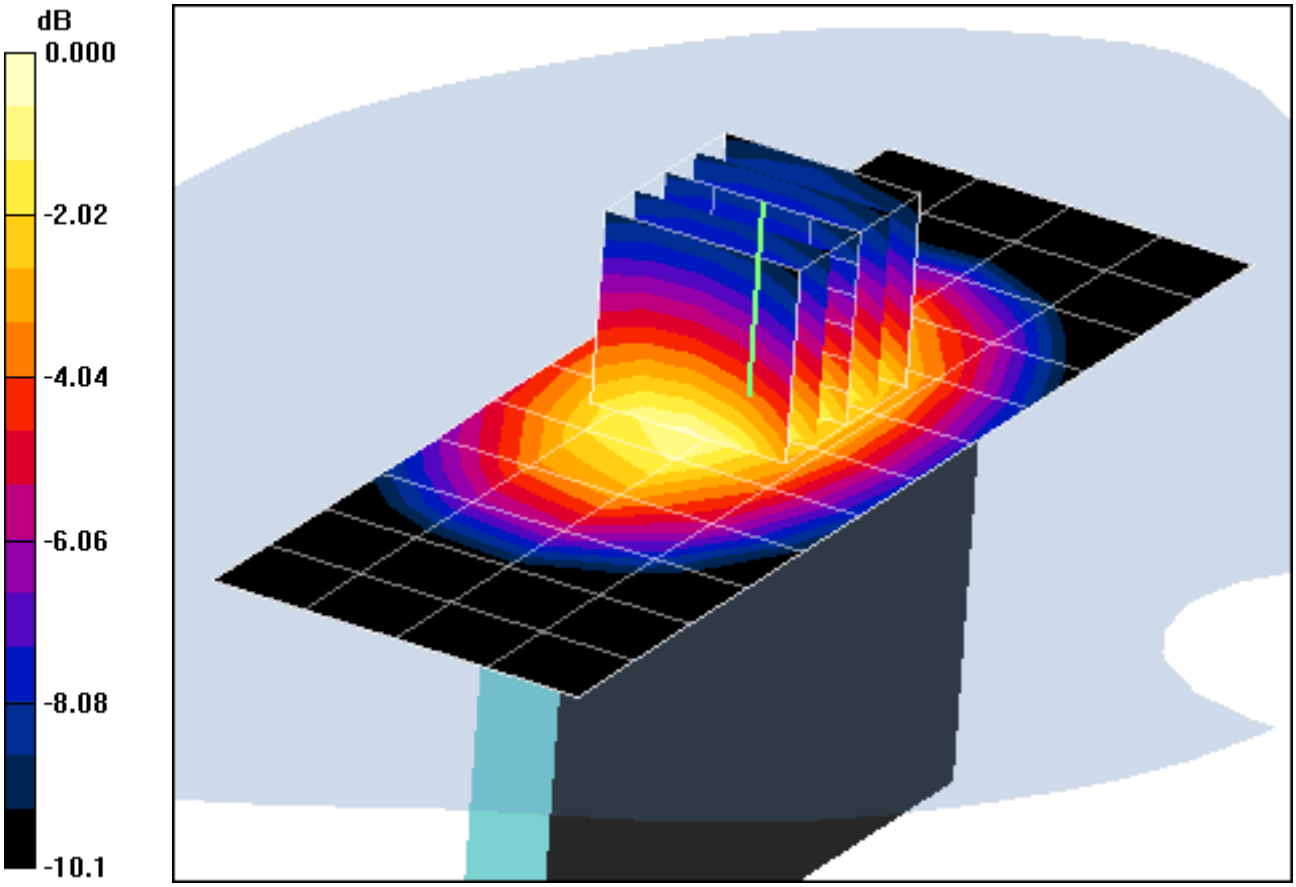

0 dB = 0.382mW/g

PCTEST ENGINEERING LABORATORY, INC.

DUT: A3LGTS5830L; Type: 850/1900 GSM/GPRS/EDGE/WCDMA Phone with Bluetooth and WLAN; Serial: FH-293-A

Communication System: GSM850 GPRS; 2 Tx slots; Frequency: 836.6 MHz;Duty Cycle: 1:4.15
Medium: 835 Body Medium parameters used (interpolated):
f = 836.6 MHz; σ = 0.968 mho/m; ε_r = 54; ρ = 1000 kg/m^3
Phantom section: Flat Section; Space: 1.0 cm

Test Date: 01-03-2011; Ambient Temp: 23.1 °C; Tissue Temp: 22.6 °C

Probe: EX3DV4 - SN3550; ConvF(8.3, 8.3, 8.3); Calibrated: 1/26/2010
Sensor-Surface: 4mm (Mechanical Surface Detection)
Electronics: DAE4 Sn649; Calibrated: 1/22/2010
Phantom: SAM Sub; Type: SAM 4.0; Serial: TP-1357
Measurement SW: DASY4, V4.7 Build 80; Postprocessing SW: SEMCAD, V1.8 Build 186

Mode: GPRS 850, Body SAR, Left Edge, Mid.ch, 2 Tx Slots

Area Scan (5x13x1): Measurement grid: dx=15mm, dy=15mm
Zoom Scan (5x5x7)/Cube 0: Measurement grid: dx=8mm, dy=8mm, dz=5mm
Reference Value = 18.7 V/m
Peak SAR (extrapolated) = 0.468 W/kg
SAR(1 g) = 0.331 mW/g; SAR(10 g) = 0.229 mW/g

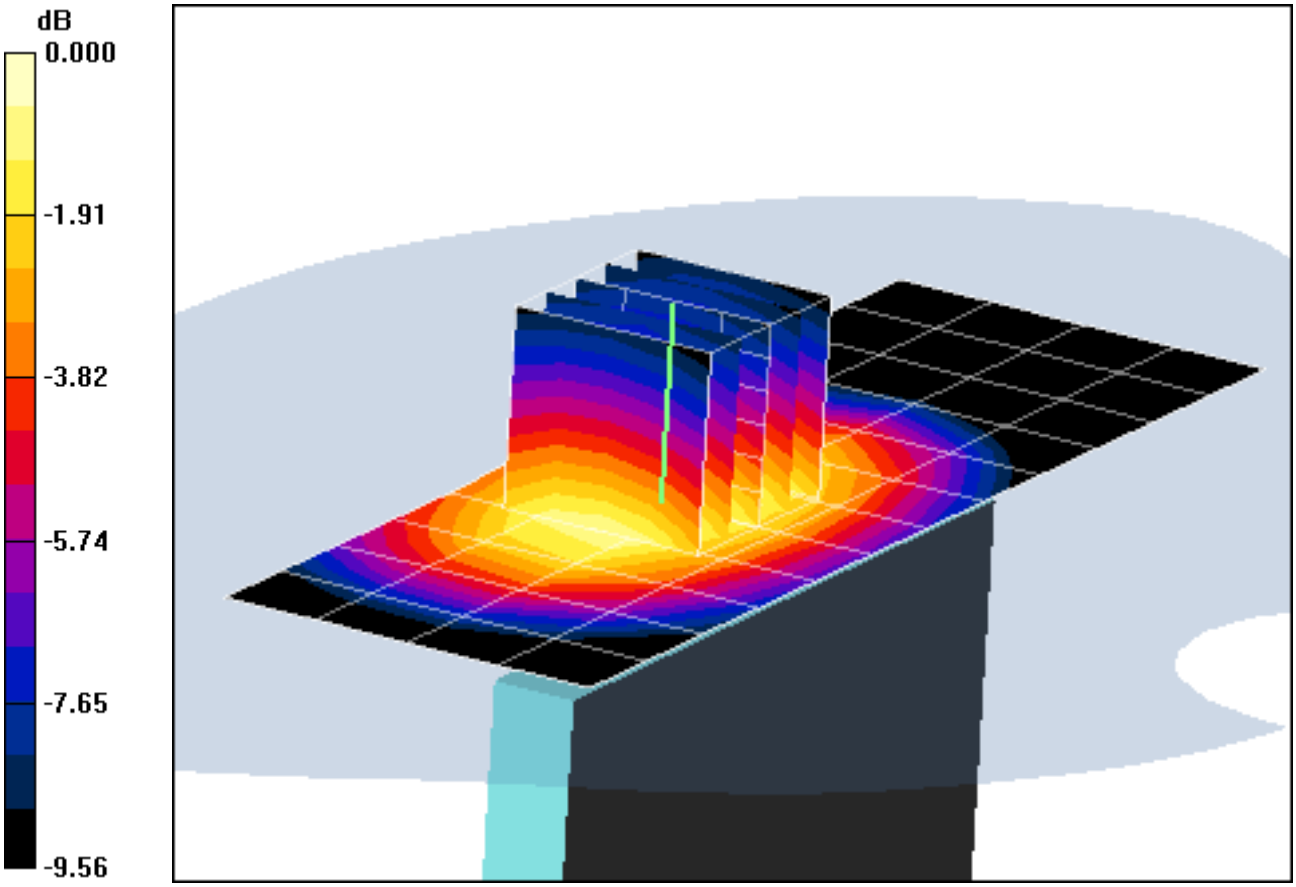

0 dB = 0.355mW/g

PCTEST ENGINEERING LABORATORY, INC.

DUT: A3LGTS5830L; Type: 850/1900 GSM/GPRS/EDGE/WCDMA Phone with Bluetooth and WLAN; Serial: FH-293-A

Communication System: GSM1900 GPRS; 2 Tx slots; Frequency: 1880 MHz;Duty Cycle: 1:4.15
Medium: 1900 Body Medium parameters used:
f = 1880 MHz; σ = 1.49 mho/m; ε_r = 52.3; ρ = 1000 kg/m^3
Phantom section: Flat Section; Space: 1.0 cm

Test Date: 01-04-2011; Ambient Temp: 23.8 °C; Tissue Temp: 22.4 °C

Probe: ES3DV2 - SN3022; ConvF(4.34, 4.34, 4.34); Calibrated: 9/21/2010
Sensor-Surface: 4mm (Mechanical Surface Detection)
Electronics: DAE3 Sn455; Calibrated: 11/18/2010
Phantom: SAM Main; Type: SAM 4.0; Serial: TP-1406
Measurement SW: DASY4, V4.7 Build 80; Postprocessing SW: SEMCAD, V1.8 Build 186

Mode: GPRS 1900, Body SAR, Back side, Mid.ch, 2 Tx Slots

Area Scan (7x10x1): Measurement grid: dx=15mm, dy=15mm
Zoom Scan (5x5x7)/Cube 0: Measurement grid: dx=8mm, dy=8mm, dz=5mm
Reference Value = 22.9 V/m
Peak SAR (extrapolated) = 1.13 W/kg
SAR(1 g) = 0.706 mW/g; SAR(10 g) = 0.409 mW/g

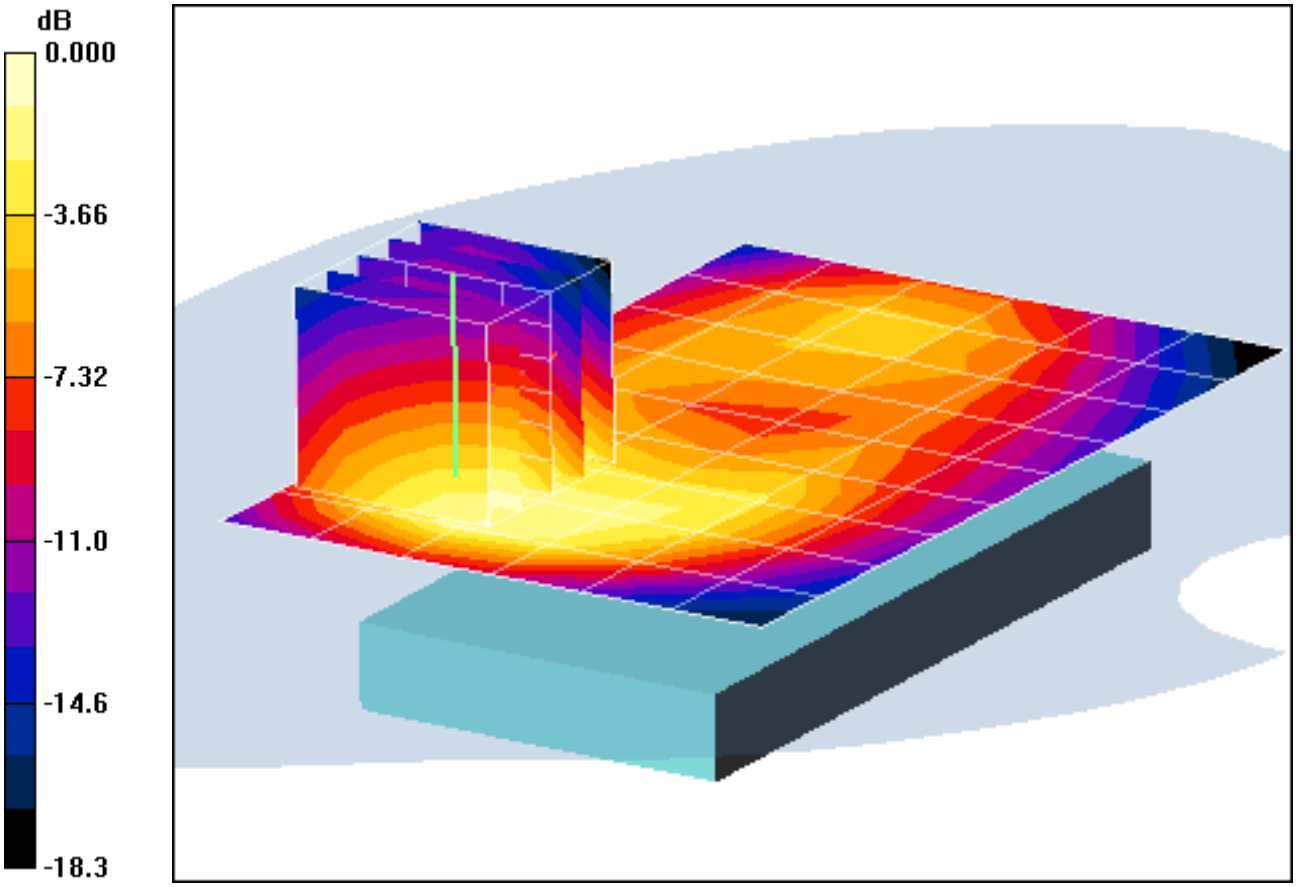

0 dB = 0.794mW/g

PCTEST ENGINEERING LABORATORY, INC.

DUT: A3LGTS5830L; Type: 850/1900 GSM/GPRS/EDGE/WCDMA Phone with Bluetooth and WLAN; Serial: FH-293-A

Communication System: GSM1900 GPRS; 2 Tx slots; Frequency: 1909.8 MHz;Duty Cycle: 1:4.15
Medium: 1900 Body Medium parameters used:
f = 1910 MHz; σ = 1.51 mho/m; ε_r = 52.2; ρ = 1000 kg/m^3
Phantom section: Flat Section; Space: 1.0 cm

Test Date: 01-04-2011; Ambient Temp: 23.8 °C; Tissue Temp: 22.4 °C

Probe: ES3DV2 - SN3022; ConvF(4.34, 4.34, 4.34); Calibrated: 9/21/2010
Sensor-Surface: 4mm (Mechanical Surface Detection)
Electronics: DAE3 Sn455; Calibrated: 11/18/2010
Phantom: SAM Main; Type: SAM 4.0; Serial: TP-1406
Measurement SW: DASY4, V4.7 Build 80; Postprocessing SW: SEMCAD, V1.8 Build 186

Mode: GPRS 1900, Body SAR, Front side, High ch, 2 Tx Slots

Area Scan (7x10x1): Measurement grid: dx=15mm, dy=15mm
Zoom Scan (5x5x7)/Cube 0: Measurement grid: dx=8mm, dy=8mm, dz=5mm
Reference Value = 30.0 V/m
Peak SAR (extrapolated) = 1.73 W/kg
SAR(1 g) = 1.18 mW/g; SAR(10 g) = 0.716 mW/g

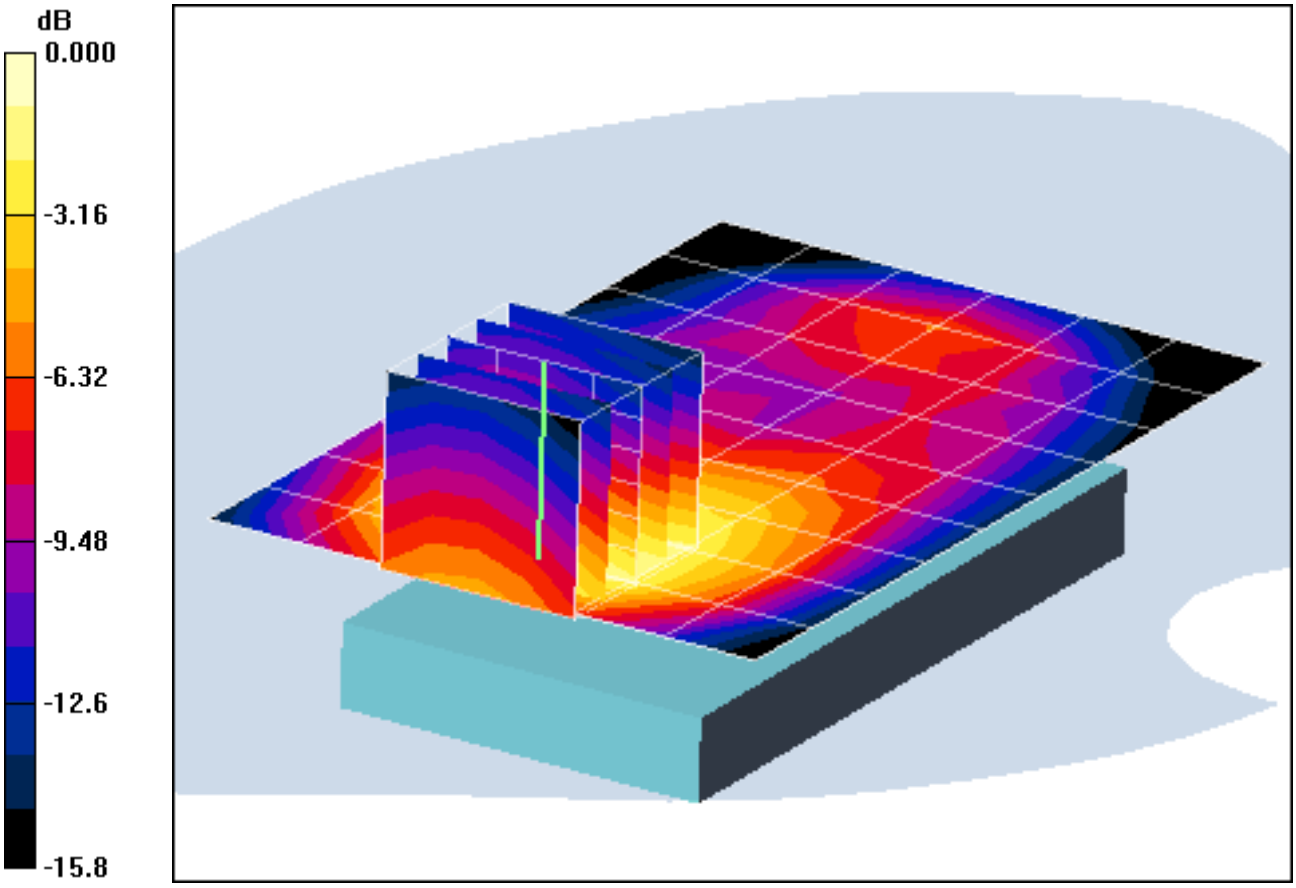

0 dB = 1.27mW/g

PCTEST ENGINEERING LABORATORY, INC.

DUT: A3LGTS5830L; Type: 850/1900 GSM/GPRS/EDGE/WCDMA Phone with Bluetooth and WLAN; Serial: FH-293-A

Communication System: GSM1900 GPRS; 2 Tx slots; Frequency: 1909.8 MHz;Duty Cycle: 1:4.15
Medium: 1900 Body Medium parameters used:
f = 1909.8 MHz; σ = 1.51 mho/m; ε_r = 52.2; ρ = 1000 kg/m^3
Phantom section: Flat Section; Space: 1.0 cm

Test Date: 01-04-2011; Ambient Temp: 23.8 °C; Tissue Temp: 22.4 °C

Probe: ES3DV2 - SN3022; ConvF(4.34, 4.34, 4.34); Calibrated: 9/21/2010
Sensor-Surface: 4mm (Mechanical Surface Detection)
Electronics: DAE3 Sn455; Calibrated: 11/18/2010
Phantom: SAM Main; Type: SAM 4.0; Serial: TP-1406
Measurement SW: DASY4, V4.7 Build 80; Postprocessing SW: SEMCAD, V1.8 Build 186

Mode: GPRS 1900, Body SAR, Bottom Edge, High ch, 2 Tx Slots

Area Scan (5x7x1): Measurement grid: dx=15mm, dy=15mm
Zoom Scan (5x5x7)/Cube 0: Measurement grid: dx=8mm, dy=8mm, dz=5mm
Reference Value = 30.9 V/m
Peak SAR (extrapolated) = 1.93 W/kg
SAR(1 g) = 1.25 mW/g; SAR(10 g) = 0.709 mW/g

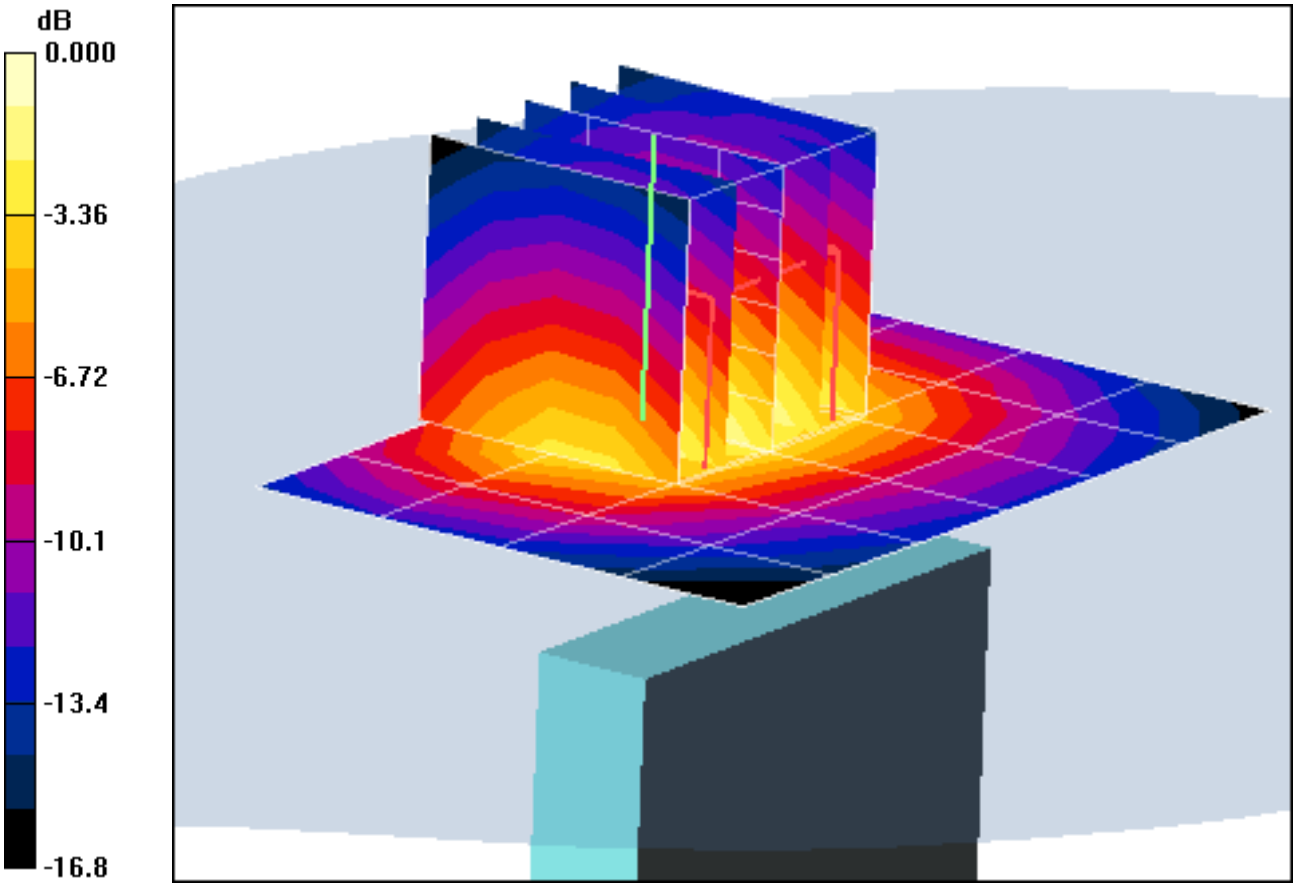

0 dB = 1.33mW/g

PCTEST ENGINEERING LABORATORY, INC.

DUT: A3LGTS5830L; Type: 850/1900 GSM/GPRS/EDGE/WCDMA Phone with Bluetooth and WLAN; Serial: FH-293-A

Communication System: GSM1900 GPRS; 2 Tx slots; Frequency: 1909.8 MHz;Duty Cycle: 1:4.15
Medium: 1900 Body Medium parameters used:
f = 1909.8 MHz; σ = 1.51 mho/m; ε_r = 52.2; ρ = 1000 kg/m^3
Phantom section: Flat Section; Space: 1.0 cm

Test Date: 01-04-2011; Ambient Temp: 23.8 °C; Tissue Temp: 22.4 °C

Probe: ES3DV2 - SN3022; ConvF(4.34, 4.34, 4.34); Calibrated: 9/21/2010
Sensor-Surface: 4mm (Mechanical Surface Detection)
Electronics: DAE3 Sn455; Calibrated: 11/18/2010
Phantom: SAM Main; Type: SAM 4.0; Serial: TP-1406
Measurement SW: DASY4, V4.7 Build 80; Postprocessing SW: SEMCAD, V1.8 Build 186

Mode: GPRS 1900, Body SAR, Bottom Edge, High ch, 2 Tx Slots

Area Scan (5x7x1): Measurement grid: dx=15mm, dy=15mm
Zoom Scan (5x5x7)/Cube 0: Measurement grid: dx=8mm, dy=8mm, dz=5mm
Reference Value = 30.9 V/m
Peak SAR (extrapolated) = 1.93 W/kg
SAR(1 g) = 1.25 mW/g; SAR(10 g) = 0.709 mW/g

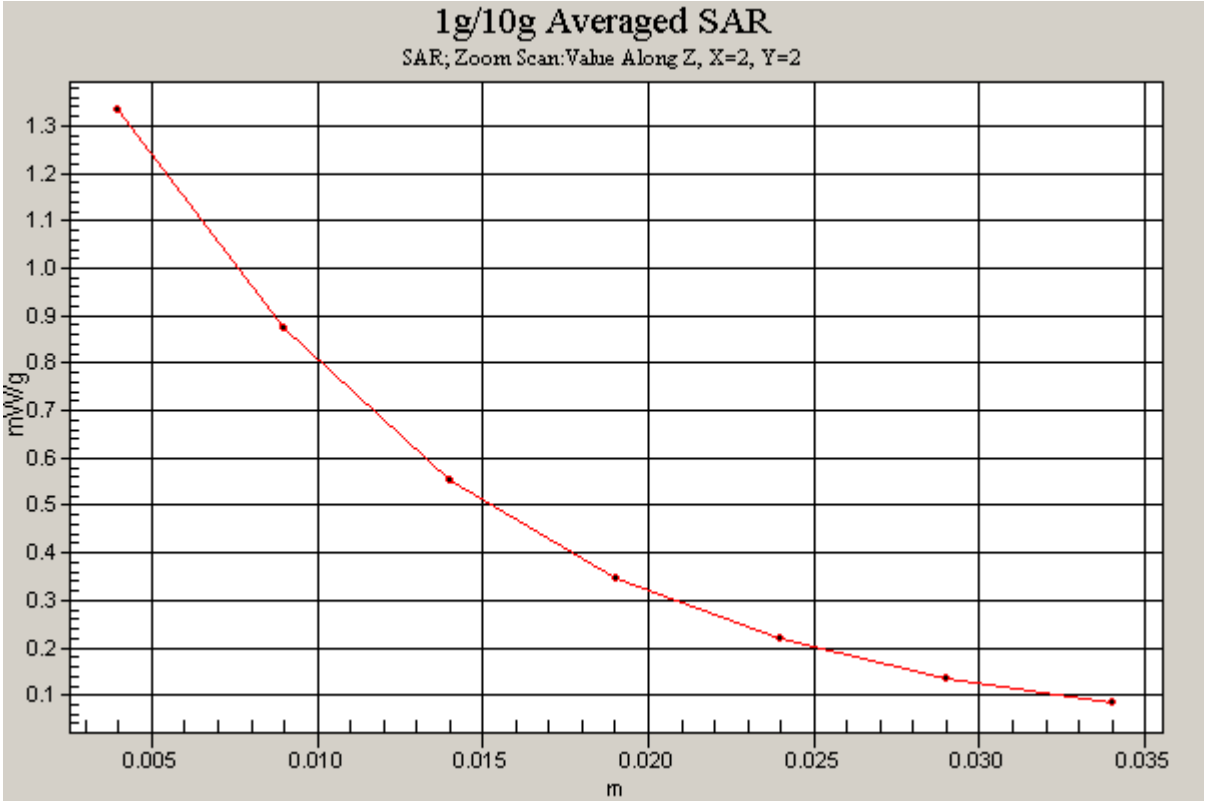

PCTEST ENGINEERING LABORATORY, INC.

DUT: A3LGTS5830L; Type: 850/1900 GSM/GPRS/EDGE/WCDMA Phone with Bluetooth and WLAN; Serial: FH-293-A

Communication System: GSM1900 GPRS; 2 Tx slots; Frequency: 1880 MHz;Duty Cycle: 1:4.15
Medium: 1900 Body Medium parameters used:
f = 1880 MHz; σ = 1.49 mho/m; ε_r = 52.3; ρ = 1000 kg/m^3
Phantom section: Flat Section; Space: 1.0 cm

Test Date: 01-04-2011; Ambient Temp: 23.8 °C; Tissue Temp: 22.4 °C

Probe: ES3DV2 - SN3022; ConvF(4.34, 4.34, 4.34); Calibrated: 9/21/2010
Sensor-Surface: 4mm (Mechanical Surface Detection)
Electronics: DAE3 Sn455; Calibrated: 11/18/2010
Phantom: SAM Main; Type: SAM 4.0; Serial: TP-1406
Measurement SW: DASY4, V4.7 Build 80; Postprocessing SW: SEMCAD, V1.8 Build 186

Mode: GPRS 1900, Body SAR, Right Edge, Mid.ch, 2 Tx Slots

Area Scan (5x13x1): Measurement grid: dx=15mm, dy=15mm
Zoom Scan (5x5x7)/Cube 0: Measurement grid: dx=8mm, dy=8mm, dz=5mm
Reference Value = 13.8 V/m
Peak SAR (extrapolated) = 0.391 W/kg
SAR(1 g) = 0.257 mW/g; SAR(10 g) = 0.151 mW/g

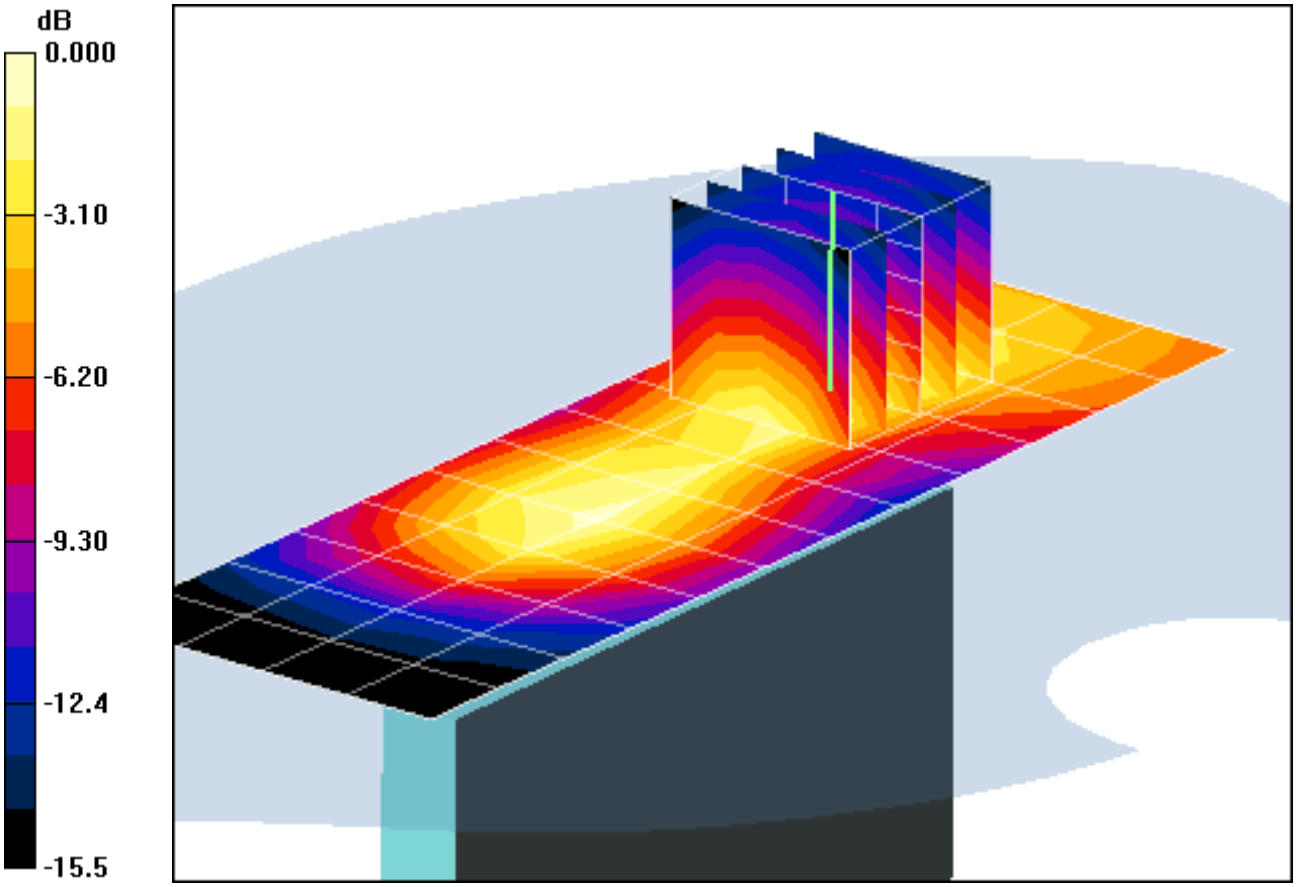

0 dB = 0.289mW/g

PCTEST ENGINEERING LABORATORY, INC.

DUT: A3LGTS5830L; Type: 850/1900 GSM/GPRS/EDGE/WCDMA Phone with Bluetooth and WLAN; Serial: FH-293-A

Communication System: GSM1900 GPRS; 2 Tx slots; Frequency: 1880 MHz;Duty Cycle: 1:4.15
Medium: 1900 Body Medium parameters used:
f = 1880 MHz; σ = 1.49 mho/m; ε_r = 52.3; ρ = 1000 kg/m^3
Phantom section: Flat Section; Space: 1.0 cm

Test Date: 01-04-2011; Ambient Temp: 23.8 °C; Tissue Temp: 22.4 °C

Probe: ES3DV2 - SN3022; ConvF(4.34, 4.34, 4.34); Calibrated: 9/21/2010
Sensor-Surface: 4mm (Mechanical Surface Detection)
Electronics: DAE3 Sn455; Calibrated: 11/18/2010
Phantom: SAM Main; Type: SAM 4.0; Serial: TP-1406
Measurement SW: DASY4, V4.7 Build 80; Postprocessing SW: SEMCAD, V1.8 Build 186

Mode: GPRS 1900, Body SAR, Left Edge, Mid.ch, 2 Tx Slots

Area Scan (5x13x1): Measurement grid: dx=15mm, dy=15mm
Zoom Scan (5x5x7)/Cube 0: Measurement grid: dx=8mm, dy=8mm, dz=5mm
Reference Value = 11.0 V/m
Peak SAR (extrapolated) = 0.242 W/kg
SAR(1 g) = 0.166 mW/g; SAR(10 g) = 0.102 mW/g

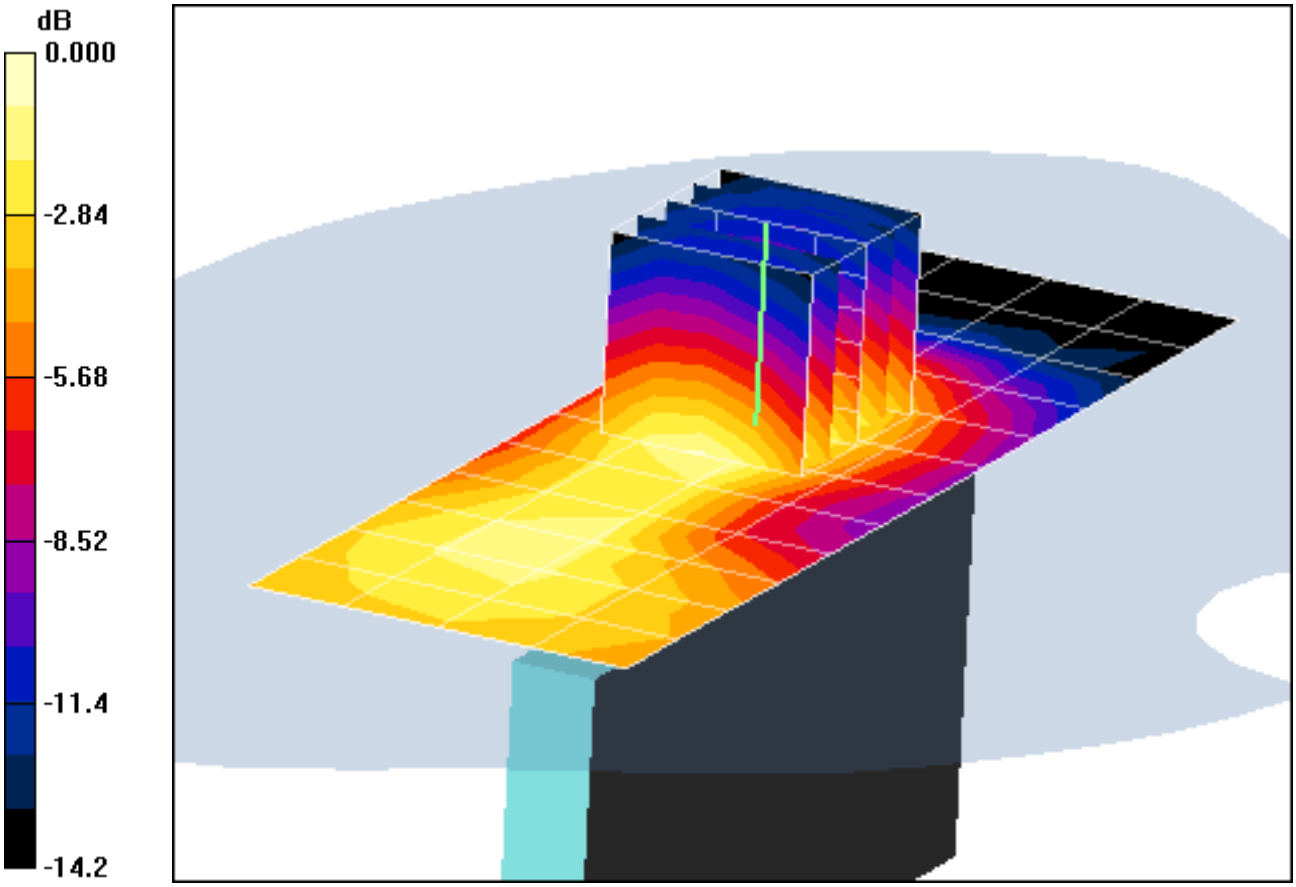

0 dB = 0.182mW/g

PCTEST ENGINEERING LABORATORY, INC.

DUT: A3LGTS5830L; Type: 850/1900 GSM/GPRS/EDGE/WCDMA Phone with Bluetooth and WLAN; Serial: FH-293-A

Communication System: WCDMA850; Frequency: 836.6 MHz;Duty Cycle: 1:1
Medium: 835 Body Medium parameters used (interpolated):
f = 836.6 MHz; σ = 0.968 mho/m; ε_r = 54; ρ = 1000 kg/m^3
Phantom section: Flat Section; Space: 1.0 cm

Test Date: 01-03-2011; Ambient Temp: 23.1 °C; Tissue Temp: 22.6 °C

Probe: EX3DV4 - SN3550; ConvF(8.3, 8.3, 8.3); Calibrated: 1/26/2010
Sensor-Surface: 4mm (Mechanical Surface Detection)
Electronics: DAE4 Sn649; Calibrated: 1/22/2010
Phantom: SAM Sub; Type: SAM 4.0; Serial: TP-1357
Measurement SW: DASY4, V4.7 Build 80; Postprocessing SW: SEMCAD, V1.8 Build 186

Mode: WCDMA 850, Body SAR, Back side, Mid.ch

Area Scan (7x10x1): Measurement grid: dx=15mm, dy=15mm
Zoom Scan (5x5x7)/Cube 0: Measurement grid: dx=8mm, dy=8mm, dz=5mm
Reference Value = 19.1 V/m
Peak SAR (extrapolated) = 0.488 W/kg
SAR(1 g) = 0.346 mW/g; SAR(10 g) = 0.242 mW/g

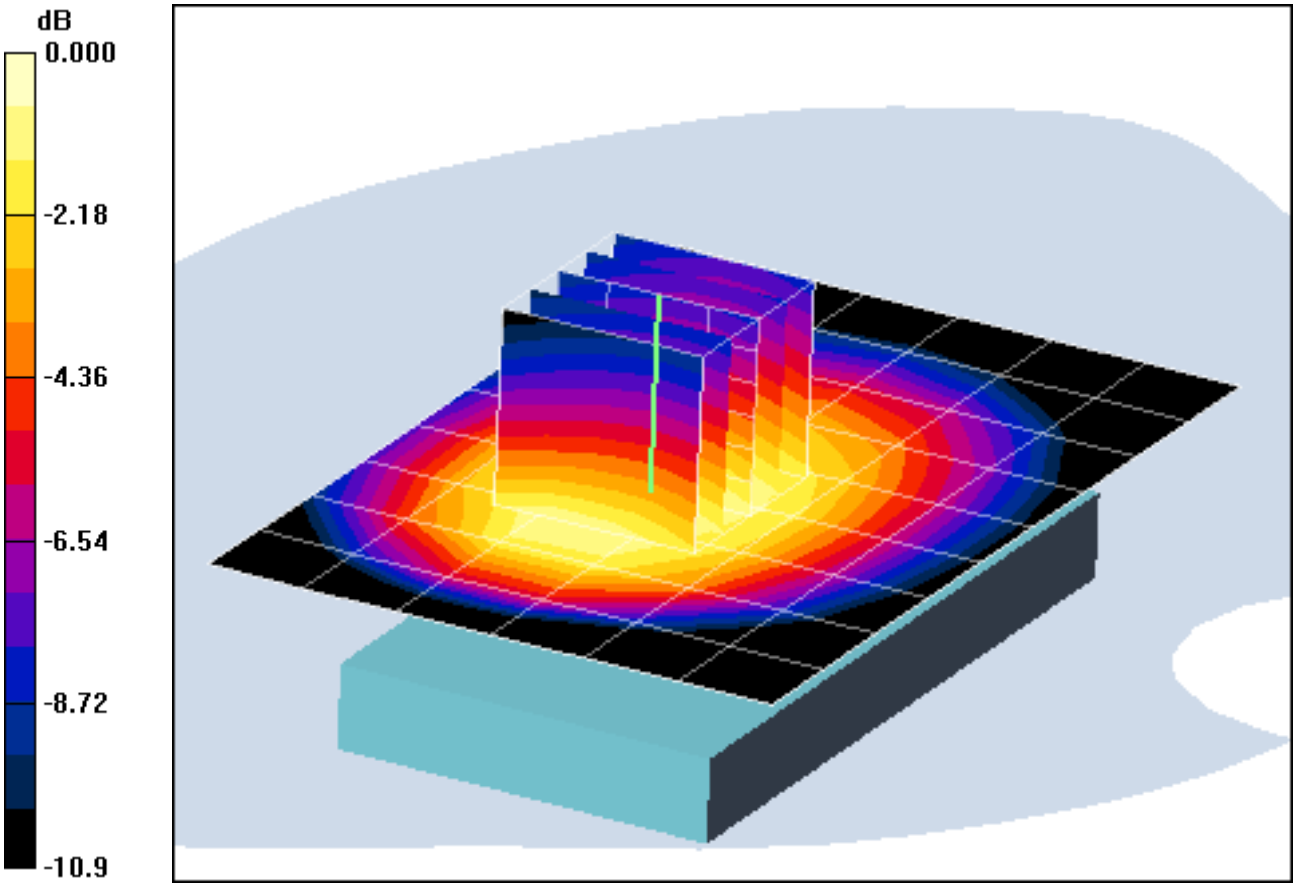

0 dB = 0.367mW/g

PCTEST ENGINEERING LABORATORY, INC.

DUT: A3LGTS5830L; Type: 850/1900 GSM/GPRS/EDGE/WCDMA Phone with Bluetooth and WLAN; Serial: FH-293-A

Communication System: WCDMA850; Frequency: 836.6 MHz;Duty Cycle: 1:1
Medium: 835 Body Medium parameters used (interpolated):
f = 836.6 MHz; σ = 0.968 mho/m; ε_r = 54; ρ = 1000 kg/m^3
Phantom section: Flat Section; Space: 1.0 cm

Test Date: 01-03-2011; Ambient Temp: 23.1 °C; Tissue Temp: 22.6 °C

Probe: EX3DV4 - SN3550; ConvF(8.3, 8.3, 8.3); Calibrated: 1/26/2010
Sensor-Surface: 4mm (Mechanical Surface Detection)
Electronics: DAE4 Sn649; Calibrated: 1/22/2010
Phantom: SAM Sub; Type: SAM 4.0; Serial: TP-1357
Measurement SW: DASY4, V4.7 Build 80; Postprocessing SW: SEMCAD, V1.8 Build 186

Mode: WCDMA 850, Body SAR, Front side, Mid.ch

Area Scan (7x10x1): Measurement grid: dx=15mm, dy=15mm
Zoom Scan (5x5x7)/Cube 0: Measurement grid: dx=8mm, dy=8mm, dz=5mm
Reference Value = 15.8 V/m
Peak SAR (extrapolated) = 0.315 W/kg
SAR(1 g) = 0.239 mW/g; SAR(10 g) = 0.177 mW/g

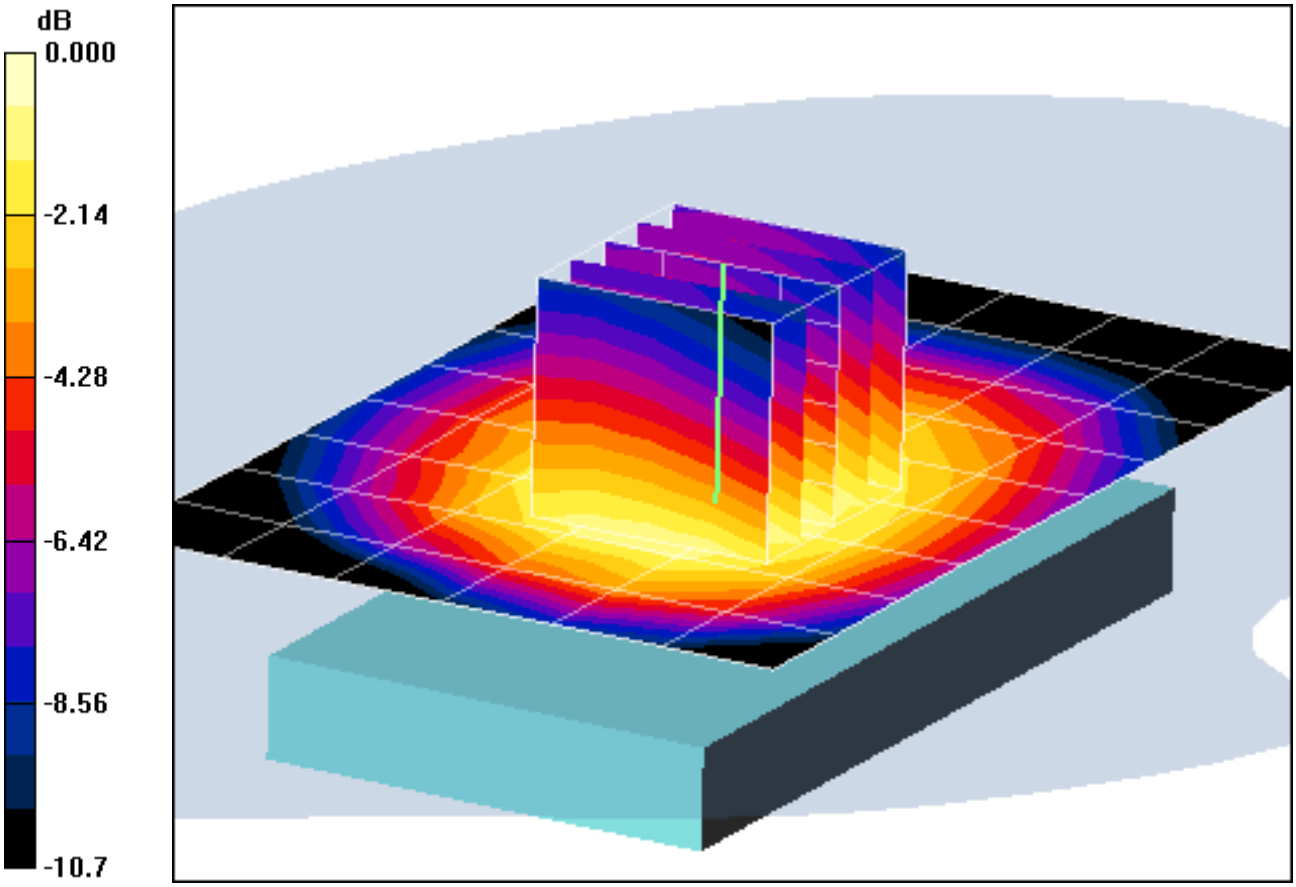

0 dB = 0.253mW/g

PCTEST ENGINEERING LABORATORY, INC.

DUT: A3LGTS5830L; Type: 850/1900 GSM/GPRS/EDGE/WCDMA Phone with Bluetooth and WLAN; Serial: FH-293-A

Communication System: WCDMA850; Frequency: 836.6 MHz;Duty Cycle: 1:1
Medium: 835 Body Medium parameters used (interpolated):
f = 836.6 MHz; σ = 0.968 mho/m; ε_r = 54; ρ = 1000 kg/m^3
Phantom section: Flat Section; Space: 1.0 cm

Test Date: 01-03-2011; Ambient Temp: 23.1 °C; Tissue Temp: 22.6 °C

Probe: EX3DV4 - SN3550; ConvF(8.3, 8.3, 8.3); Calibrated: 1/26/2010
Sensor-Surface: 4mm (Mechanical Surface Detection)
Electronics: DAE4 Sn649; Calibrated: 1/22/2010
Phantom: SAM Sub; Type: SAM 4.0; Serial: TP-1357
Measurement SW: DASY4, V4.7 Build 80; Postprocessing SW: SEMCAD, V1.8 Build 186

Mode: WCDMA 850, Body SAR, Bottom Edge, Mid.ch

Area Scan (5x7x1): Measurement grid: dx=15mm, dy=15mm
Zoom Scan (5x5x7)/Cube 0: Measurement grid: dx=8mm, dy=8mm, dz=5mm
Reference Value = 4.05 V/m
Peak SAR (extrapolated) = 0.035 W/kg
SAR(1 g) = 0.016 mW/g; SAR(10 g) = 0.010 mW/g

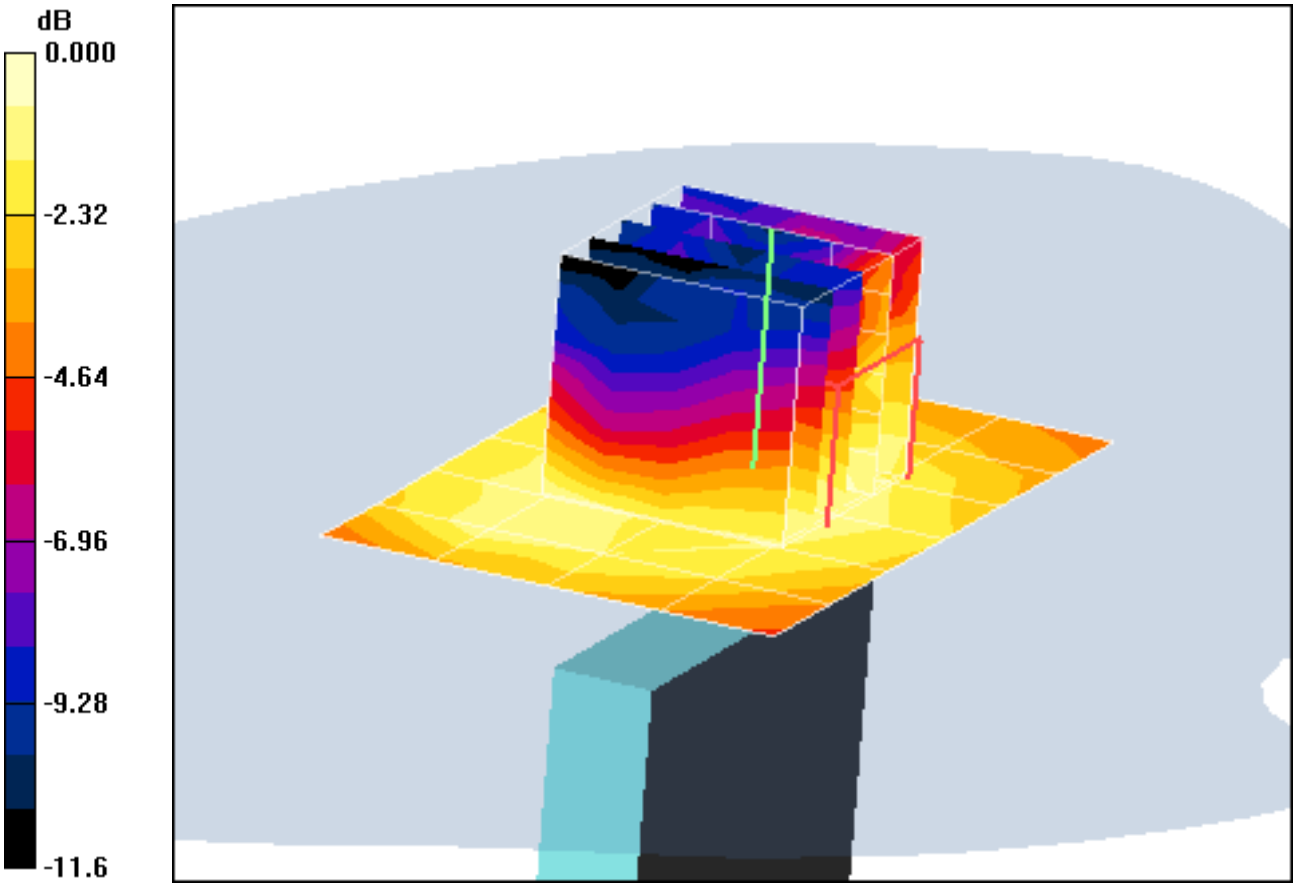

0 dB = 0.017mW/g

PCTEST ENGINEERING LABORATORY, INC.

DUT: A3LGTS5830L; Type: 850/1900 GSM/GPRS/EDGE/WCDMA Phone with Bluetooth and WLAN; Serial: FH-293-A

Communication System: WCDMA850; Frequency: 836.6 MHz;Duty Cycle: 1:1
Medium: 835 Body Medium parameters used (interpolated):
f = 836.6 MHz; σ = 0.968 mho/m; ε_r = 54; ρ = 1000 kg/m^3
Phantom section: Flat Section; Space: 1.0 cm

Test Date: 01-03-2011; Ambient Temp: 23.1 °C; Tissue Temp: 22.6 °C

Probe: EX3DV4 - SN3550; ConvF(8.3, 8.3, 8.3); Calibrated: 1/26/2010
Sensor-Surface: 4mm (Mechanical Surface Detection)
Electronics: DAE4 Sn649; Calibrated: 1/22/2010
Phantom: SAM Sub; Type: SAM 4.0; Serial: TP-1357
Measurement SW: DASY4, V4.7 Build 80; Postprocessing SW: SEMCAD, V1.8 Build 186

Mode: WCDMA 850, Body SAR, Right Edge, Mid.ch

Area Scan (5x13x1): Measurement grid: dx=15mm, dy=15mm
Zoom Scan (5x5x7)/Cube 0: Measurement grid: dx=8mm, dy=8mm, dz=5mm
Reference Value = 12.7 V/m
Peak SAR (extrapolated) = 0.208 W/kg
SAR(1 g) = 0.146 mW/g; SAR(10 g) = 0.100 mW/g

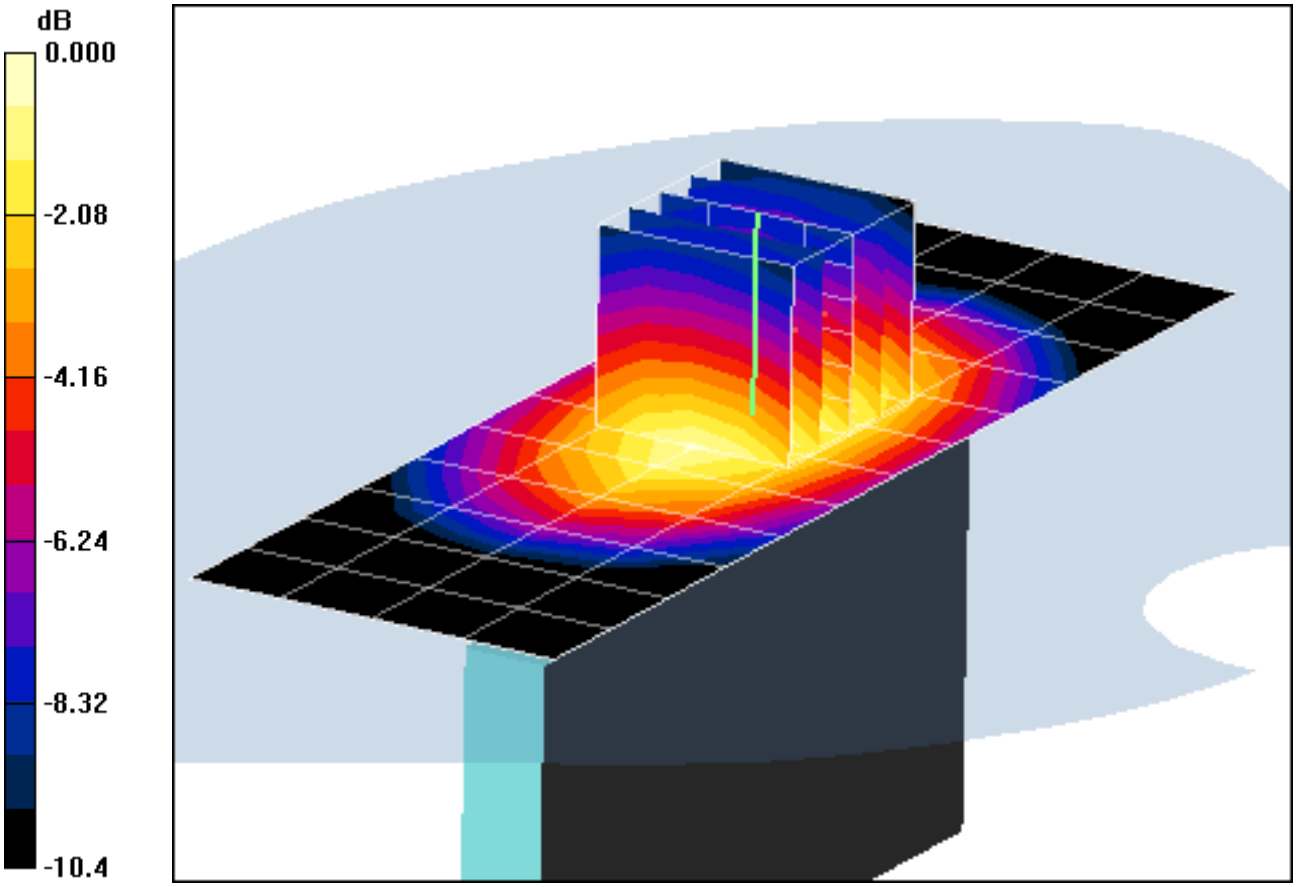

0 dB = 0.156mW/g

PCTEST ENGINEERING LABORATORY, INC.

DUT: A3LGTS5830L; Type: 850/1900 GSM/GPRS/EDGE/WCDMA Phone with Bluetooth and WLAN; Serial: FH-293-A

Communication System: WCDMA850; Frequency: 836.6 MHz;Duty Cycle: 1:1
Medium: 835 Body Medium parameters used (interpolated):
f = 836.6 MHz; σ = 0.968 mho/m; ε_r = 54; ρ = 1000 kg/m^3
Phantom section: Flat Section; Space: 1.0 cm

Test Date: 01-03-2011; Ambient Temp: 23.1 °C; Tissue Temp: 22.6 °C

Probe: EX3DV4 - SN3550; ConvF(8.3, 8.3, 8.3); Calibrated: 1/26/2010
Sensor-Surface: 4mm (Mechanical Surface Detection)
Electronics: DAE4 Sn649; Calibrated: 1/22/2010
Phantom: SAM Sub; Type: SAM 4.0; Serial: TP-1357
Measurement SW: DASY4, V4.7 Build 80; Postprocessing SW: SEMCAD, V1.8 Build 186

Mode: WCDMA 850, Body SAR, Left Edge, Mid.ch

Area Scan (5x13x1): Measurement grid: dx=15mm, dy=15mm
Zoom Scan (5x5x7)/Cube 0: Measurement grid: dx=8mm, dy=8mm, dz=5mm
Reference Value = 12.3 V/m
Peak SAR (extrapolated) = 0.195 W/kg
SAR(1 g) = 0.137 mW/g; SAR(10 g) = 0.095 mW/g

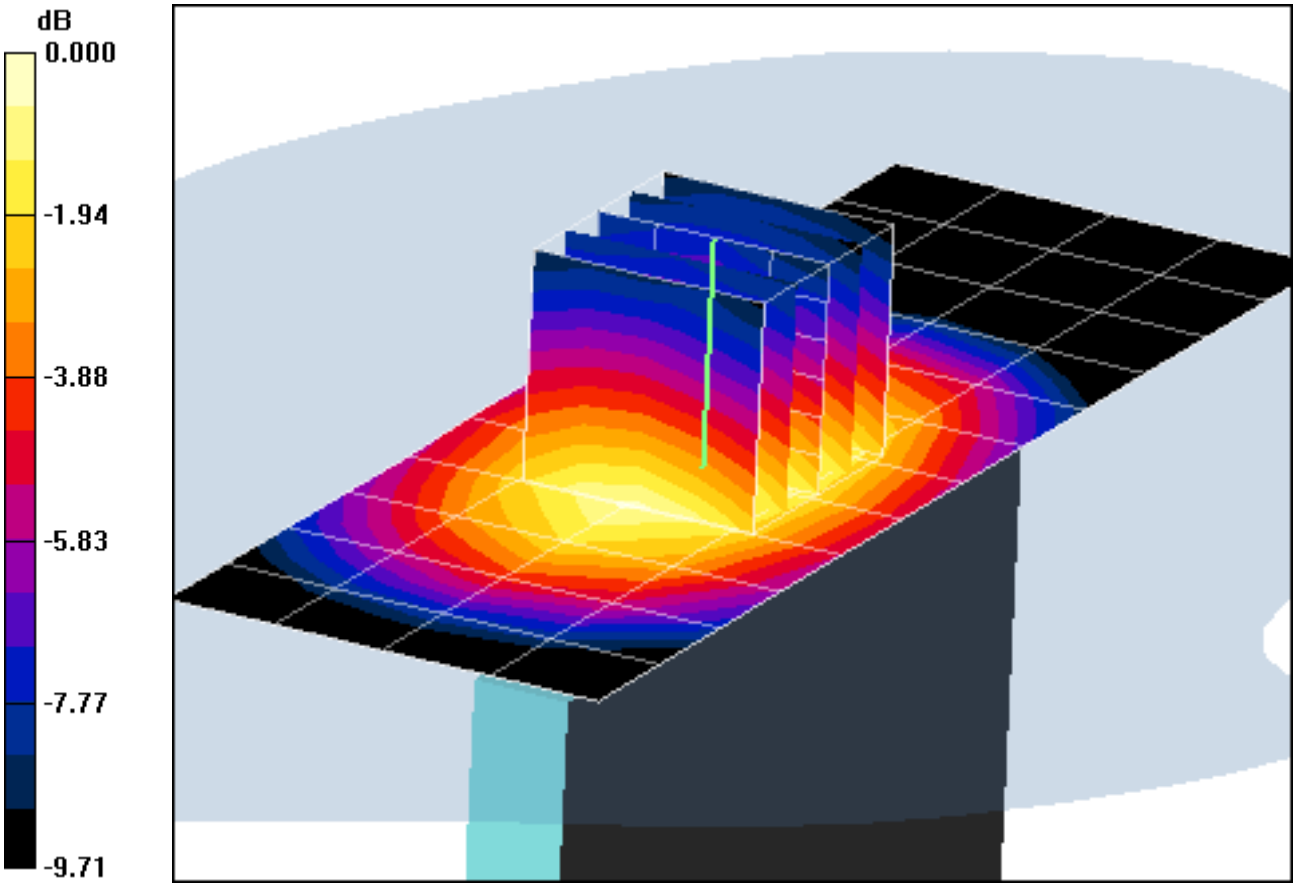

0 dB = 0.147mW/g

PCTEST ENGINEERING LABORATORY, INC.

DUT: A3LGTS5830L; Type: 850/1900 GSM/GPRS/EDGE/WCDMA Phone with Bluetooth and WLAN; Serial: FH-293-A

Communication System: WCDMA1900; Frequency: 1880 MHz;Duty Cycle: 1:1
Medium: 1900 Body Medium parameters used:
f = 1880 MHz; σ = 1.49 mho/m; ε_r = 52.3; ρ = 1000 kg/m^3
Phantom section: Flat Section; Space: 1.0 cm

Test Date: 01-04-2011; Ambient Temp: 23.8 °C; Tissue Temp: 22.4 °C

Probe: ES3DV2 - SN3022; ConvF(4.34, 4.34, 4.34); Calibrated: 9/21/2010
Sensor-Surface: 4mm (Mechanical Surface Detection)
Electronics: DAE3 Sn455; Calibrated: 11/18/2010
Phantom: SAM Main; Type: SAM 4.0; Serial: TP-1406
Measurement SW: DASY4, V4.7 Build 80; Postprocessing SW: SEMCAD, V1.8 Build 186

Mode: WCDMA 1900, Body SAR, Back side, Mid.ch

Area Scan (7x10x1): Measurement grid: dx=15mm, dy=15mm
Zoom Scan (5x5x7)/Cube 0: Measurement grid: dx=8mm, dy=8mm, dz=5mm
Reference Value = 20.6 V/m
Peak SAR (extrapolated) = 0.889 W/kg
SAR(1 g) = 0.553 mW/g; SAR(10 g) = 0.319 mW/g

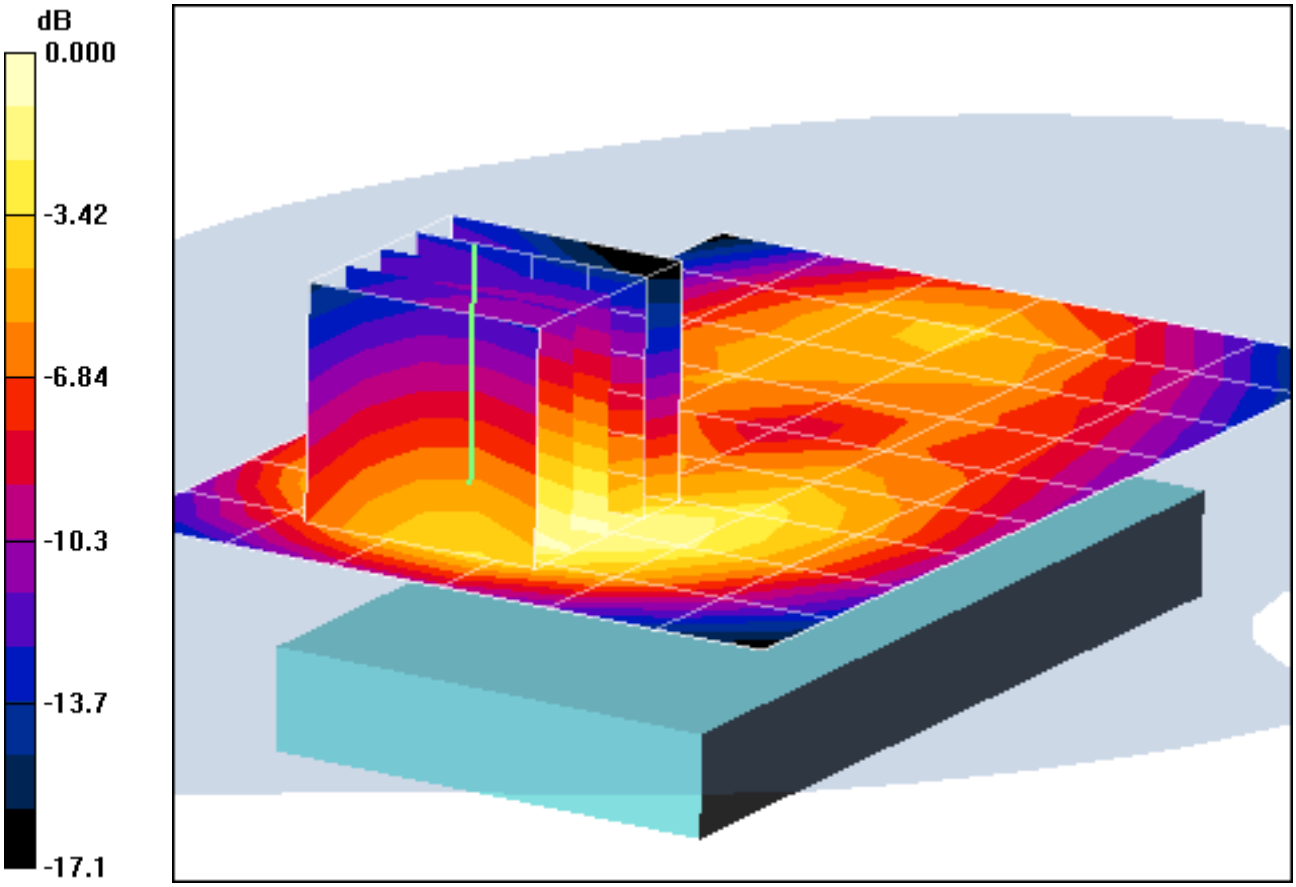

0 dB = 0.615mW/g

PCTEST ENGINEERING LABORATORY, INC.

DUT: A3LGTS5830L; Type: 850/1900 GSM/GPRS/EDGE/WCDMA Phone with Bluetooth and WLAN; Serial: FH-293-A

Communication System: WCDMA1900; Frequency: 1880 MHz;Duty Cycle: 1:1
Medium: 1900 Body Medium parameters used:
f = 1880 MHz; σ = 1.49 mho/m; ε_r = 52.3; ρ = 1000 kg/m^3
Phantom section: Flat Section; Space: 1.0 cm

Test Date: 01-04-2011; Ambient Temp: 23.8 °C; Tissue Temp: 22.4 °C

Probe: ES3DV2 - SN3022; ConvF(4.34, 4.34, 4.34); Calibrated: 9/21/2010
Sensor-Surface: 4mm (Mechanical Surface Detection)
Electronics: DAE3 Sn455; Calibrated: 11/18/2010
Phantom: SAM Main; Type: SAM 4.0; Serial: TP-1406
Measurement SW: DASY4, V4.7 Build 80; Postprocessing SW: SEMCAD, V1.8 Build 186

Mode: WCDMA 1900, Body SAR, Front side, Mid.ch

Area Scan (7x10x1): Measurement grid: dx=15mm, dy=15mm
Zoom Scan (5x5x7)/Cube 0: Measurement grid: dx=8mm, dy=8mm, dz=5mm
Reference Value = 24.3 V/m
Peak SAR (extrapolated) = 1.08 W/kg
SAR(1 g) = 0.754 mW/g; SAR(10 g) = 0.460 mW/g

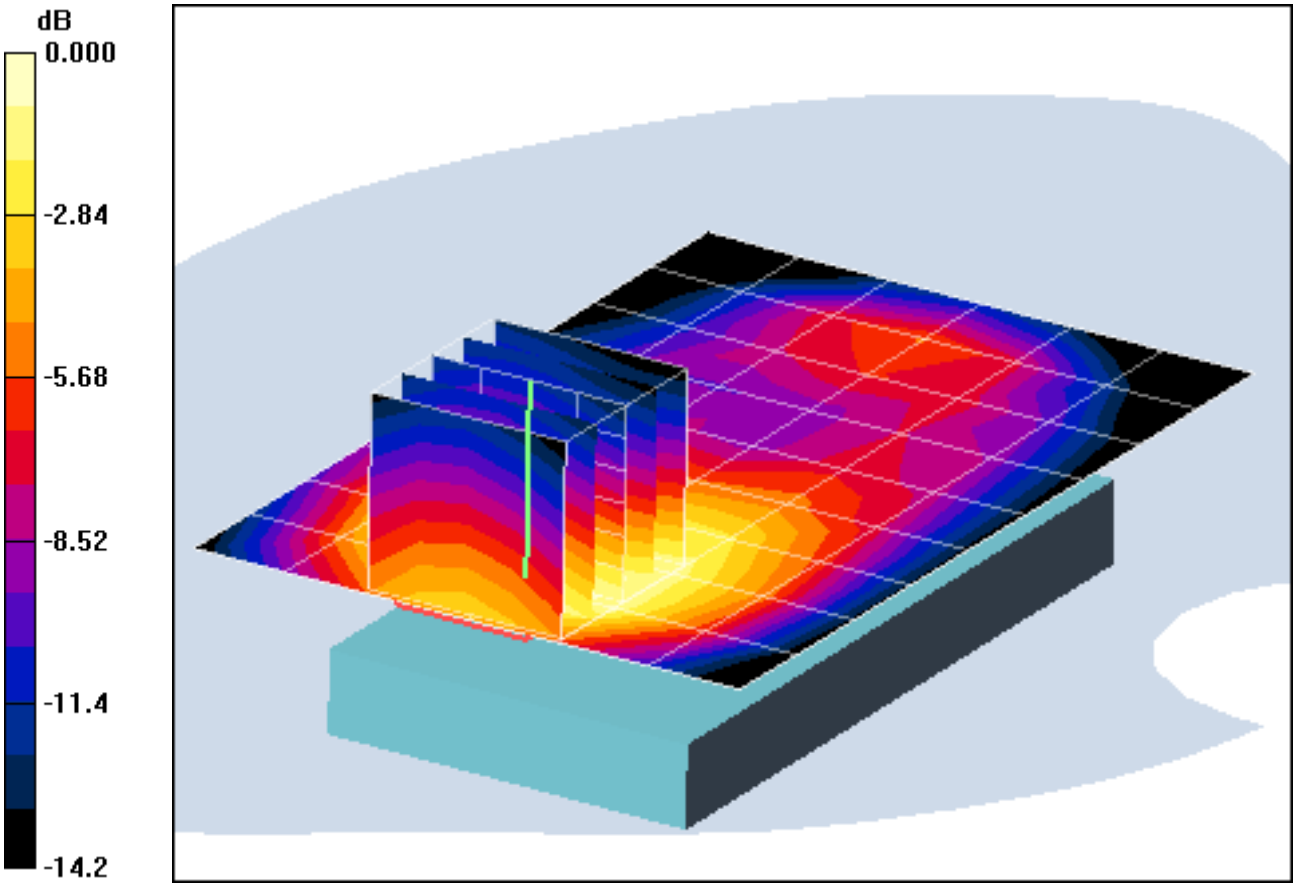

0 dB = 0.803mW/g

PCTEST ENGINEERING LABORATORY, INC.

DUT: A3LGTS5830L; Type: 850/1900 GSM/GPRS/EDGE/WCDMA Phone with Bluetooth and WLAN; Serial: FH-293-A

Communication System: WCDMA1900; Frequency: 1880 MHz;Duty Cycle: 1:1
Medium: 1900 Body Medium parameters used:
f = 1880 MHz; σ = 1.49 mho/m; ε_r = 52.3; ρ = 1000 kg/m^3
Phantom section: Flat Section; Space: 1.0 cm

Test Date: 01-04-2011; Ambient Temp: 23.8 °C; Tissue Temp: 22.4 °C

Probe: ES3DV2 - SN3022; ConvF(4.34, 4.34, 4.34); Calibrated: 9/21/2010
Sensor-Surface: 4mm (Mechanical Surface Detection)
Electronics: DAE3 Sn455; Calibrated: 11/18/2010
Phantom: SAM Main; Type: SAM 4.0; Serial: TP-1406
Measurement SW: DASY4, V4.7 Build 80; Postprocessing SW: SEMCAD, V1.8 Build 186

Mode: WCDMA 1900, Body SAR, Bottom Edge, Mid.ch

Area Scan (5x7x1): Measurement grid: dx=15mm, dy=15mm
Zoom Scan (5x5x7)/Cube 0: Measurement grid: dx=8mm, dy=8mm, dz=5mm
Reference Value = 28.6 V/m
Peak SAR (extrapolated) = 1.53 W/kg
SAR(1 g) = 1.02 mW/g; SAR(10 g) = 0.586 mW/g

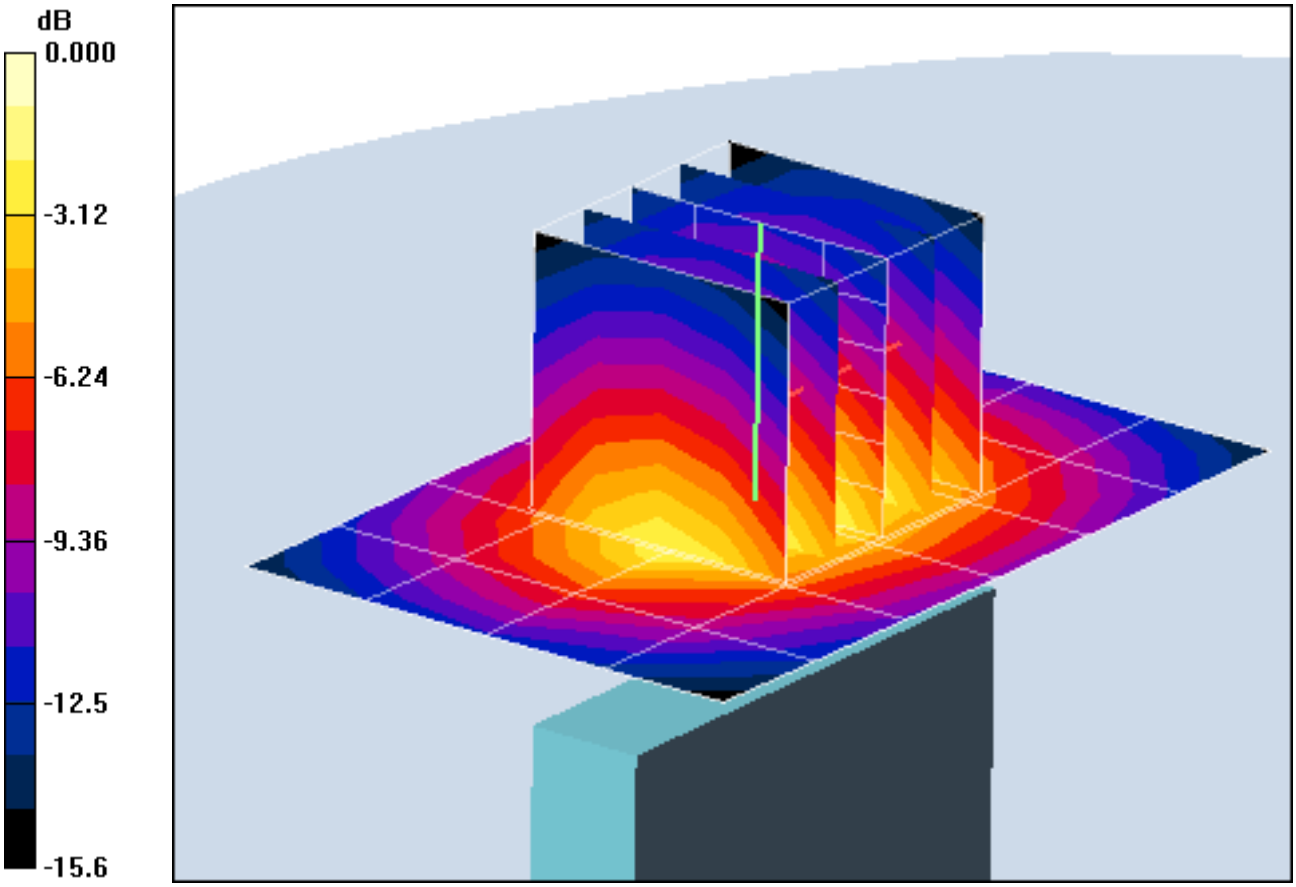

0 dB = 1.15mW/g

PCTEST ENGINEERING LABORATORY, INC.

DUT: A3LGTS5830L; Type: 850/1900 GSM/GPRS/EDGE/WCDMA Phone with Bluetooth and WLAN; Serial: FH-293-A

Communication System: WCDMA1900; Frequency: 1880 MHz;Duty Cycle: 1:1
Medium: 1900 Body Medium parameters used:
f = 1880 MHz; σ = 1.49 mho/m; ε_r = 52.3; ρ = 1000 kg/m^3
Phantom section: Flat Section; Space: 1.0 cm

Test Date: 01-04-2011; Ambient Temp: 23.8 °C; Tissue Temp: 22.4 °C

Probe: ES3DV2 - SN3022; ConvF(4.34, 4.34, 4.34); Calibrated: 9/21/2010
Sensor-Surface: 4mm (Mechanical Surface Detection)
Electronics: DAE3 Sn455; Calibrated: 11/18/2010
Phantom: SAM Main; Type: SAM 4.0; Serial: TP-1406
Measurement SW: DASY4, V4.7 Build 80; Postprocessing SW: SEMCAD, V1.8 Build 186

Mode: WCDMA 1900, Body SAR, Right Edge, Mid.ch

Area Scan (5x13x1): Measurement grid: dx=15mm, dy=15mm
Zoom Scan (5x5x7)/Cube 0: Measurement grid: dx=8mm, dy=8mm, dz=5mm
Reference Value = 11.6 V/m
Peak SAR (extrapolated) = 0.261 W/kg
SAR(1 g) = 0.179 mW/g; SAR(10 g) = 0.110 mW/g

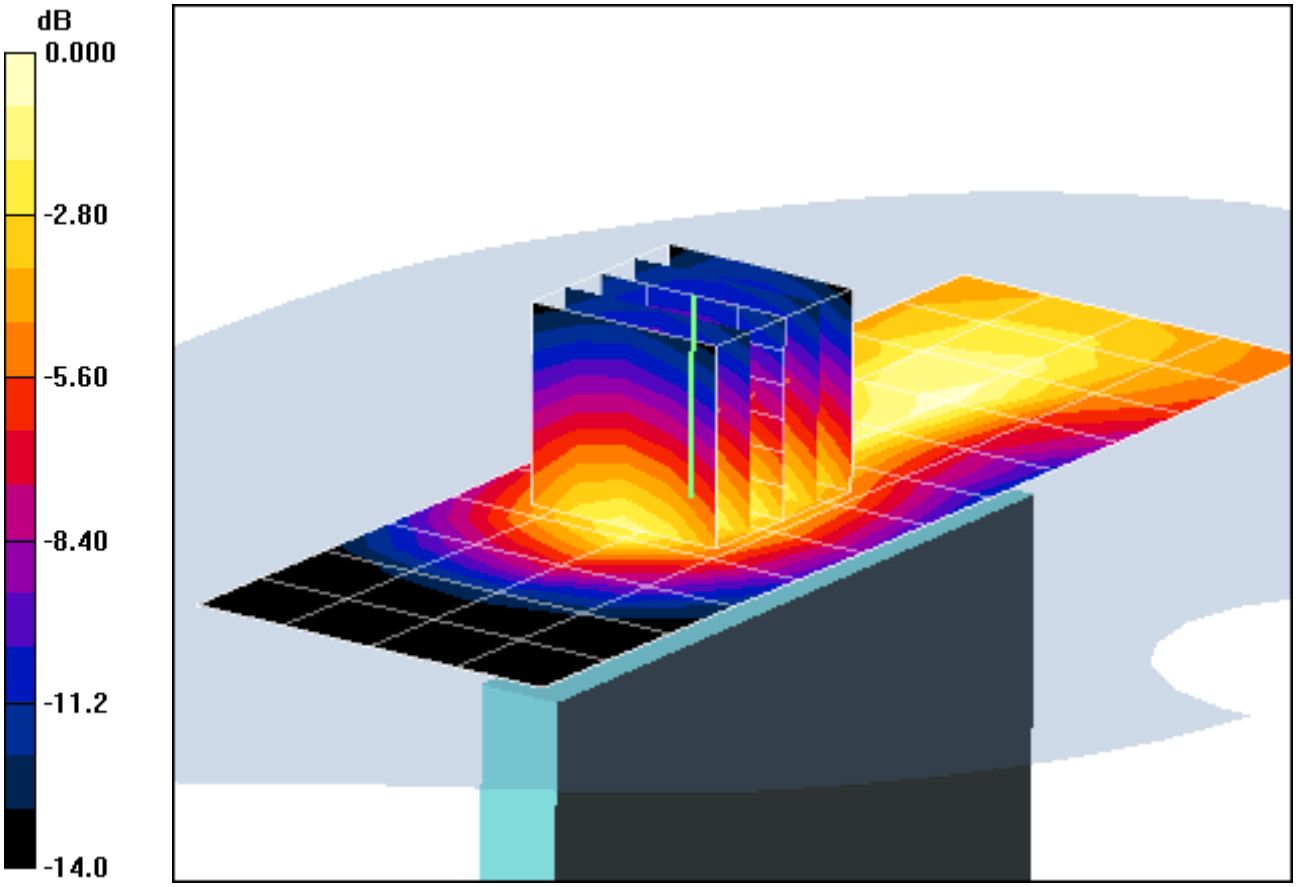

0 dB = 0.198mW/g

PCTEST ENGINEERING LABORATORY, INC.

DUT: A3LGTS5830L; Type: 850/1900 GSM/GPRS/EDGE/WCDMA Phone with Bluetooth and WLAN; Serial: FH-293-A

Communication System: WCDMA1900; Frequency: 1880 MHz;Duty Cycle: 1:1
Medium: 1900 Body Medium parameters used:
f = 1880 MHz; σ = 1.49 mho/m; ε_r = 52.3; ρ = 1000 kg/m^3
Phantom section: Flat Section; Space: 1.0 cm

Test Date: 01-04-2011; Ambient Temp: 23.8 °C; Tissue Temp: 22.4 °C

Probe: ES3DV2 - SN3022; ConvF(4.34, 4.34, 4.34); Calibrated: 9/21/2010
Sensor-Surface: 4mm (Mechanical Surface Detection)
Electronics: DAE3 Sn455; Calibrated: 11/18/2010
Phantom: SAM Main; Type: SAM 4.0; Serial: TP-1406
Measurement SW: DASY4, V4.7 Build 80; Postprocessing SW: SEMCAD, V1.8 Build 186

Mode: WCDMA 1900, Body SAR, Left Edge, Mid.ch

Area Scan (5x13x1): Measurement grid: dx=15mm, dy=15mm
Zoom Scan (5x5x7)/Cube 0: Measurement grid: dx=8mm, dy=8mm, dz=5mm
Reference Value = 9.54 V/m
Peak SAR (extrapolated) = 0.166 W/kg
SAR(1 g) = 0.115 mW/g; SAR(10 g) = 0.071 mW/g

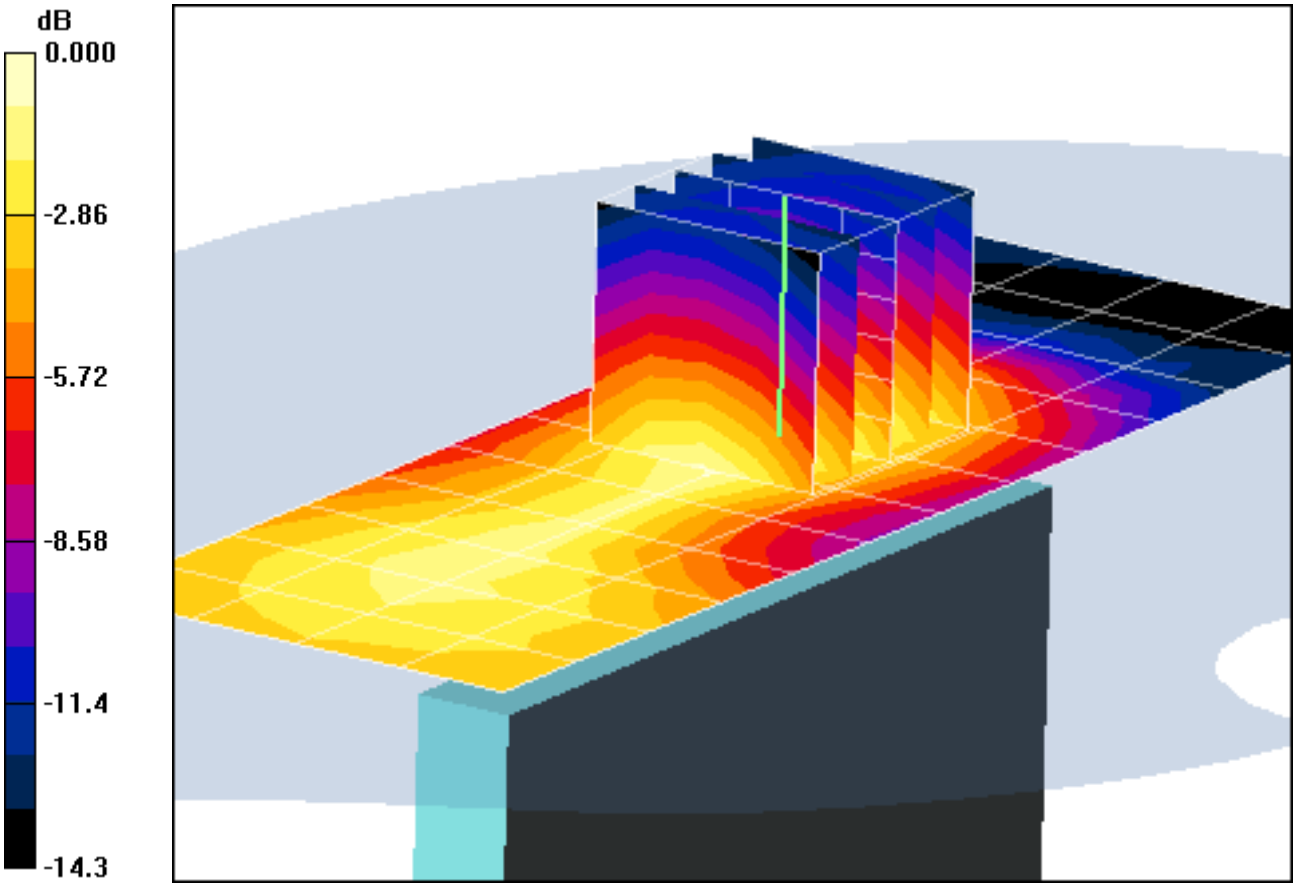

0 dB = 0.125mW/g

PCTEST ENGINEERING LABORATORY, INC.

DUT: A3LGTS5830L; Type: 850/1900 GSM/GPRS/EDGE/WCDMA Phone with Bluetooth and WLAN; Serial: FH-293-A

Communication System: IEEE 802.11b; Frequency: 2412 MHz;Duty Cycle: 1:1
Medium: 2450 Body Medium parameters used (interpolated):
f = 2412 MHz; σ = 1.97 mho/m; ε_r = 50.5; ρ = 1000 kg/m^3
Phantom section: Flat Section; Space: 1.0 cm

Test Date: 01-06-2011; Ambient Temp: 24.1 °C; Tissue Temp: 22.3 °C

Probe: ES3DV2 - SN3022; ConvF(4.06, 4.06, 4.06); Calibrated: 9/21/2010
Sensor-Surface: 3mm (Mechanical Surface Detection)
Electronics: DAE3 Sn455; Calibrated: 11/18/2010
Phantom: SAM Main; Type: SAM 4.0; Serial: TP-1406
Measurement SW: DASY4, V4.7 Build 80; Postprocessing SW: SEMCAD, V1.8 Build 186

Mode: IEEE 802.11b, Body SAR, Ch 01, 1 Mbps, Back Side

Area Scan (7x11x1): Measurement grid: dx=15mm, dy=15mm
Zoom Scan (5x5x7)/Cube 0: Measurement grid: dx=8mm, dy=8mm, dz=5mm
Reference Value = 2.32 V/m
Peak SAR (extrapolated) = 0.049 W/kg
SAR(1 g) = 0.023 mW/g; SAR(10 g) = 0.013 mW/g

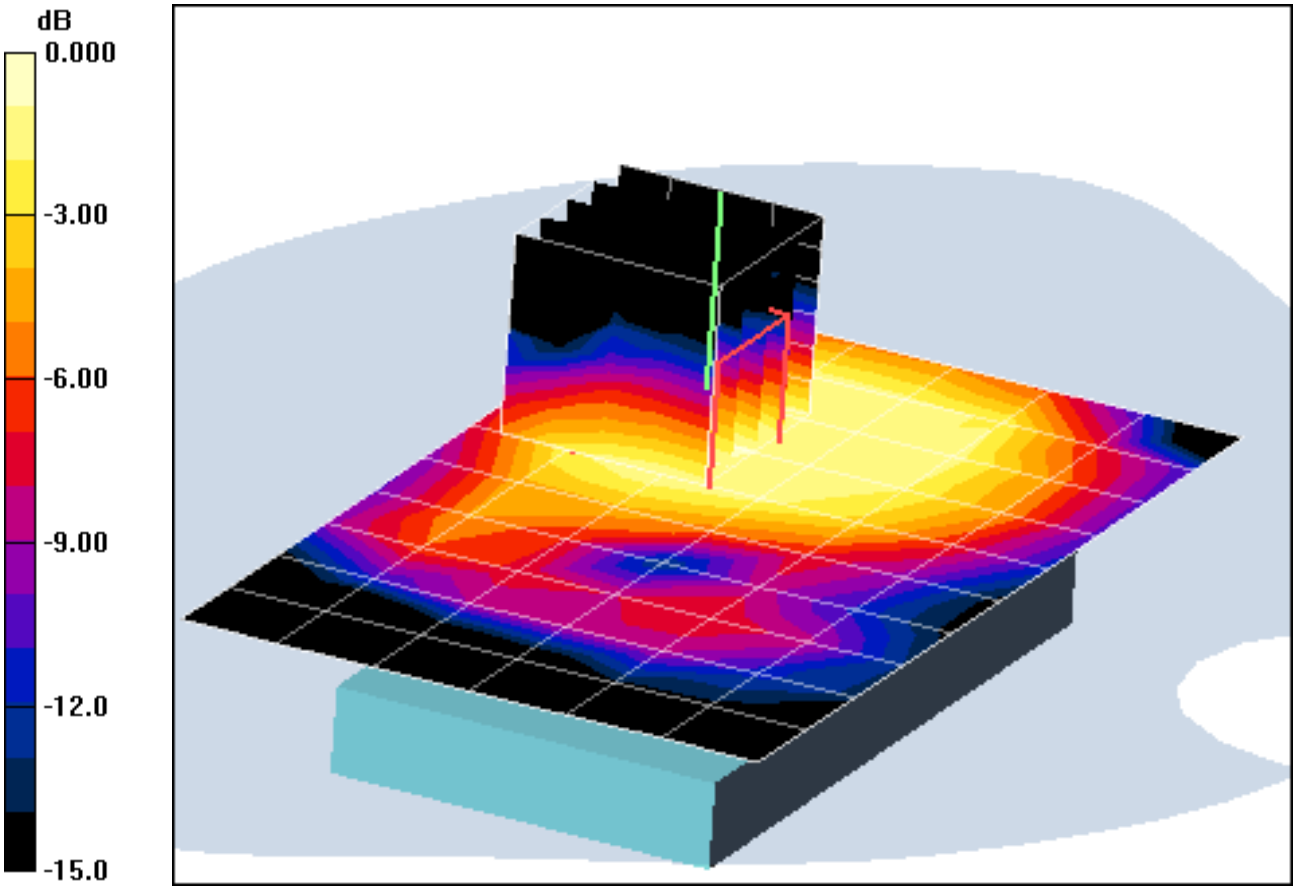

0 dB = 0.031mW/g

PCTEST ENGINEERING LABORATORY, INC.

DUT: A3LGTS5830L; Type: 850/1900 GSM/GPRS/EDGE/WCDMA Phone with Bluetooth and WLAN; Serial: FH-293-A

Communication System: IEEE 802.11b; Frequency: 2412 MHz;Duty Cycle: 1:1
Medium: 2450 Body Medium parameters used (interpolated):
f = 2412 MHz; σ = 1.97 mho/m; ε_r = 50.5; ρ = 1000 kg/m^3
Phantom section: Flat Section; Space: 1.0 cm

Test Date: 01-06-2011; Ambient Temp: 24.1 °C; Tissue Temp: 22.3 °C

Probe: ES3DV2 - SN3022; ConvF(4.06, 4.06, 4.06); Calibrated: 9/21/2010
Sensor-Surface: 3mm (Mechanical Surface Detection)
Electronics: DAE3 Sn455; Calibrated: 11/18/2010
Phantom: SAM Main; Type: SAM 4.0; Serial: TP-1406
Measurement SW: DASY4, V4.7 Build 80; Postprocessing SW: SEMCAD, V1.8 Build 186

Mode: IEEE 802.11b, Body SAR, Ch 01, 1 Mbps, Back Side

Area Scan (7x11x1): Measurement grid: dx=15mm, dy=15mm
Zoom Scan (5x5x7)/Cube 0: Measurement grid: dx=8mm, dy=8mm, dz=5mm
Reference Value = 2.32 V/m
Peak SAR (extrapolated) = 0.049 W/kg
SAR(1 g) = 0.023 mW/g; SAR(10 g) = 0.013 mW/g

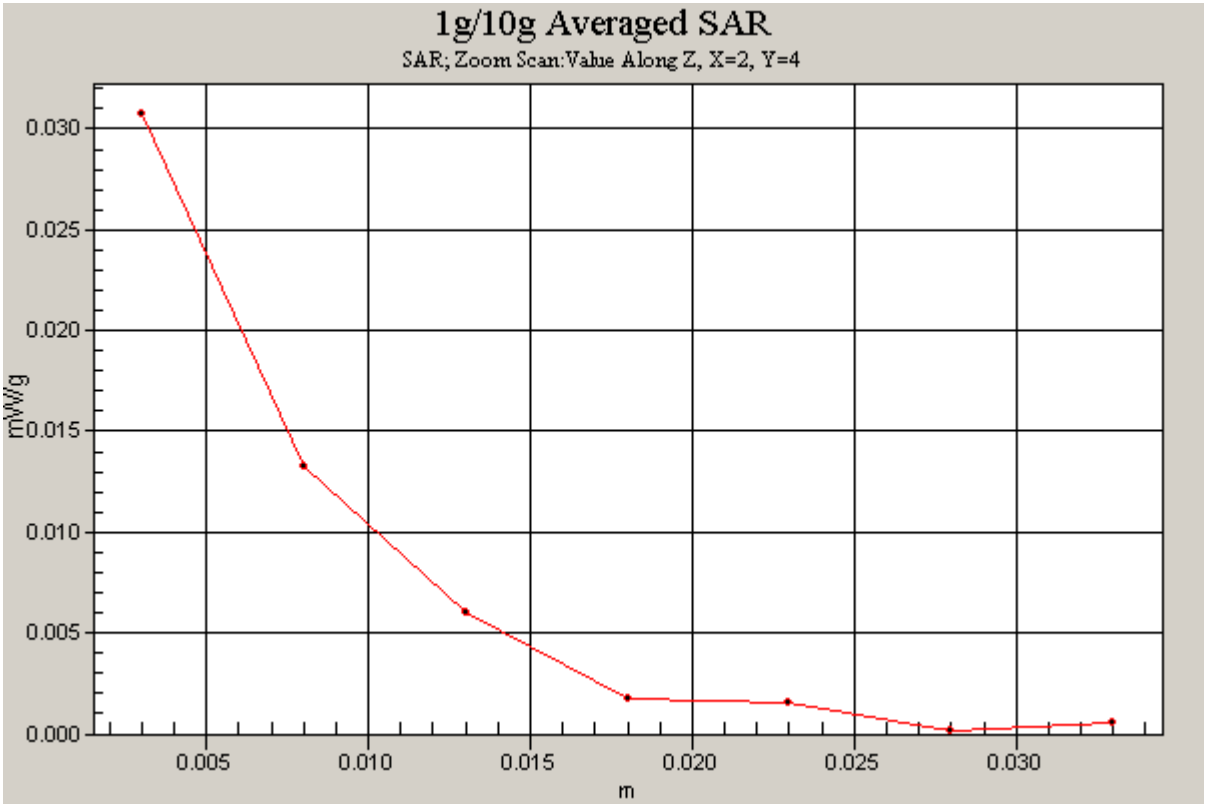

PCTEST ENGINEERING LABORATORY, INC.

DUT: A3LGTS5830L; Type: 850/1900 GSM/GPRS/EDGE/WCDMA Phone with Bluetooth and WLAN; Serial: FH-293-A

Communication System: IEEE 802.11b; Frequency: 2412 MHz;Duty Cycle: 1:1
Medium: 2450 Body Medium parameters used (interpolated):
f = 2412 MHz; σ = 1.97 mho/m; ε_r = 50.5; ρ = 1000 kg/m^3
Phantom section: Flat Section; Space: 1.0 cm

Test Date: 01-06-2011; Ambient Temp: 24.1 °C; Tissue Temp: 22.3 °C

Probe: ES3DV2 - SN3022; ConvF(4.06, 4.06, 4.06); Calibrated: 9/21/2010
Sensor-Surface: 3mm (Mechanical Surface Detection)
Electronics: DAE3 Sn455; Calibrated: 11/18/2010
Phantom: SAM Main; Type: SAM 4.0; Serial: TP-1406
Measurement SW: DASY4, V4.7 Build 80; Postprocessing SW: SEMCAD, V1.8 Build 186

Mode: IEEE 802.11b, Body SAR, Ch 01, 1 Mbps, Front Side

Area Scan (7x11x1): Measurement grid: dx=15mm, dy=15mm
Zoom Scan (5x5x7)/Cube 0: Measurement grid: dx=8mm, dy=8mm, dz=5mm
Reference Value = 1.39 V/m
Peak SAR (extrapolated) = 0.016 W/kg
SAR(1 g) = 0.00917 mW/g; SAR(10 g) = 0.00473 mW/g

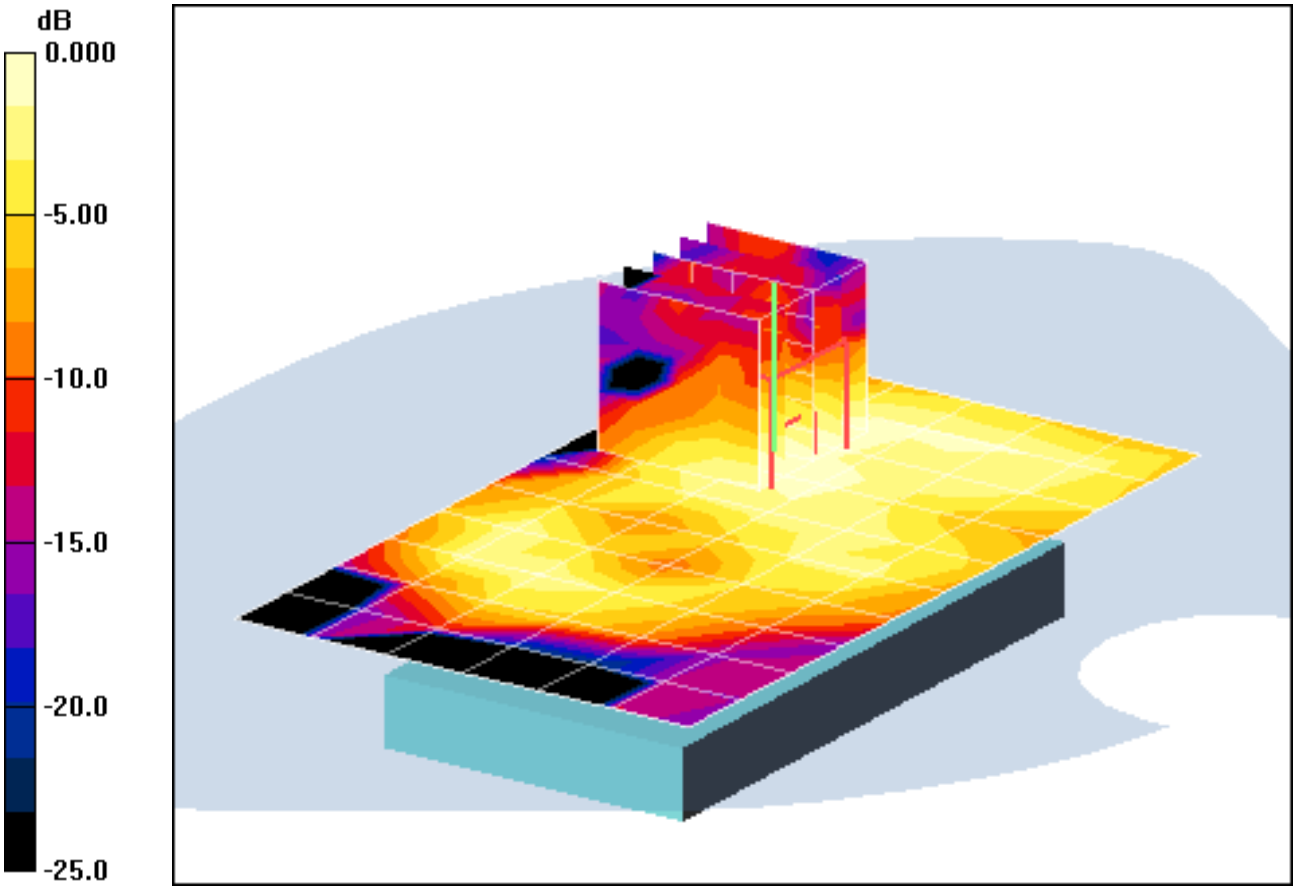

0 dB = 0.011mW/g

PCTEST ENGINEERING LABORATORY, INC.

DUT: A3LGTS5830L; Type: 850/1900 GSM/GPRS/EDGE/WCDMA Phone with Bluetooth and WLAN; Serial: FH-293-A

Communication System: IEEE 802.11b; Frequency: 2412 MHz;Duty Cycle: 1:1
Medium: 2450 Body Medium parameters used (interpolated):
f = 2412 MHz; σ = 1.97 mho/m; ε_r = 50.5; ρ = 1000 kg/m^3
Phantom section: Flat Section; Space: 1.0 cm

Test Date: 01-06-2011; Ambient Temp: 24.1 °C; Tissue Temp: 22.3 °C

Probe: ES3DV2 - SN3022; ConvF(4.06, 4.06, 4.06); Calibrated: 9/21/2010
Sensor-Surface: 3mm (Mechanical Surface Detection)
Electronics: DAE3 Sn455; Calibrated: 11/18/2010
Phantom: SAM Main; Type: SAM 4.0; Serial: TP-1406
Measurement SW: DASY4, V4.7 Build 80; Postprocessing SW: SEMCAD, V1.8 Build 186

Mode: IEEE 802.11b, Body SAR, Ch 01, 1 Mbps, Top Edge

Area Scan (5x7x1): Measurement grid: dx=15mm, dy=15mm
Zoom Scan (5x5x7)/Cube 0: Measurement grid: dx=8mm, dy=8mm, dz=5mm
Reference Value = 2.55 V/m
Peak SAR (extrapolated) = 0.018 W/kg
SAR(1 g) = 0.011 mW/g; SAR(10 g) = 0.00527 mW/g

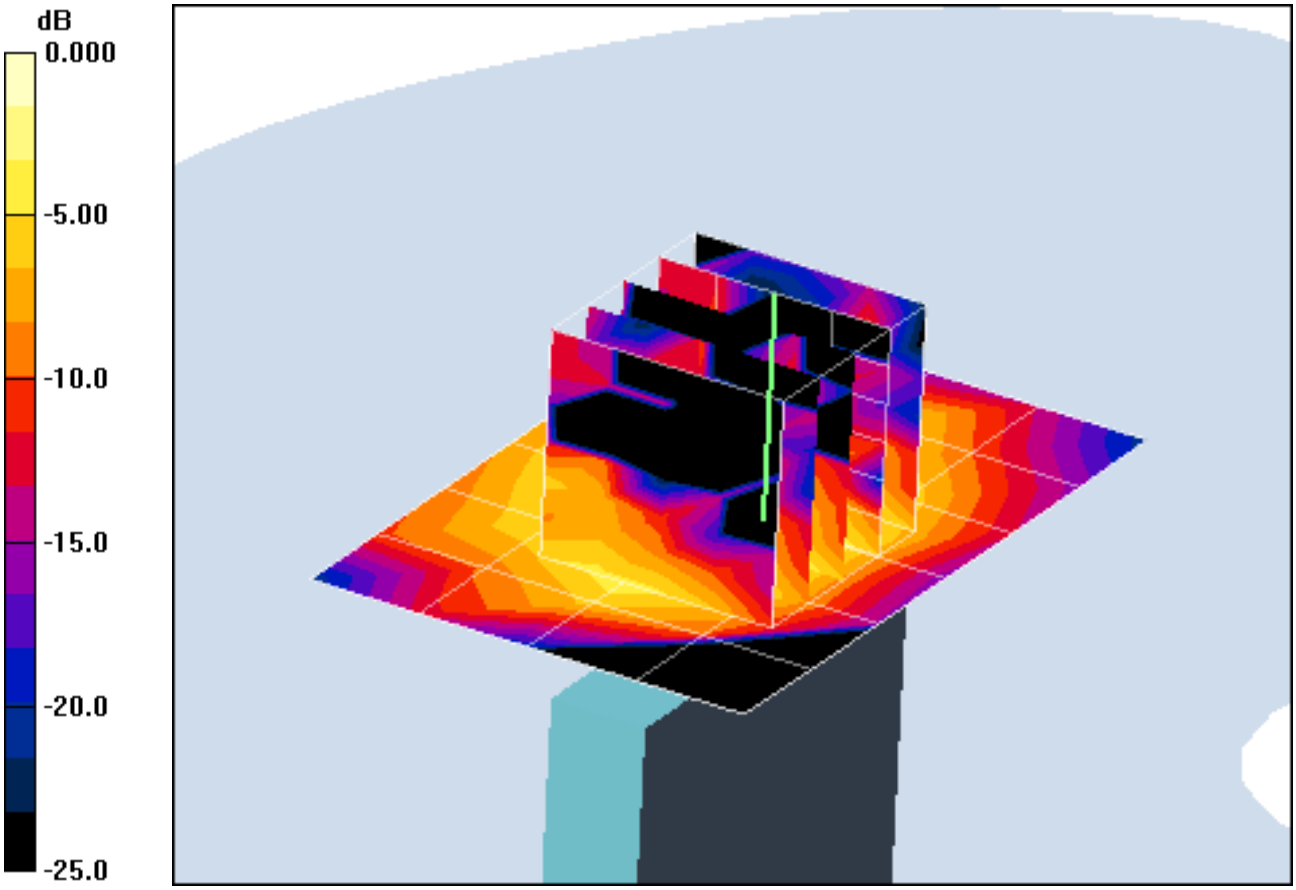

0 dB = 0.013mW/g

PCTEST ENGINEERING LABORATORY, INC.

DUT: A3LGTS5830L; Type: 850/1900 GSM/GPRS/EDGE/WCDMA Phone with Bluetooth and WLAN; Serial: FH-293-A

Communication System: IEEE 802.11b; Frequency: 2412 MHz;Duty Cycle: 1:1
Medium: 2450 Body Medium parameters used (interpolated):
f = 2412 MHz; σ = 1.97 mho/m; ε_r = 50.5; ρ = 1000 kg/m^3
Phantom section: Flat Section; Space: 1.0 cm

Test Date: 01-06-2011; Ambient Temp: 24.1 °C; Tissue Temp: 22.3 °C

Probe: ES3DV2 - SN3022; ConvF(4.06, 4.06, 4.06); Calibrated: 9/21/2010
Sensor-Surface: 3mm (Mechanical Surface Detection)
Electronics: DAE3 Sn455; Calibrated: 11/18/2010
Phantom: SAM Main; Type: SAM 4.0; Serial: TP-1406
Measurement SW: DASY4, V4.7 Build 80; Postprocessing SW: SEMCAD, V1.8 Build 186

Mode: IEEE 802.11b, Body SAR, Ch 01, 1 Mbps, Right Edge

Area Scan (5x13x1): Measurement grid: dx=15mm, dy=15mm
Zoom Scan (5x5x7)/Cube 0: Measurement grid: dx=8mm, dy=8mm, dz=5mm
Reference Value = 2.16 V/m
Peak SAR (extrapolated) = 0.040 W/kg
SAR(1 g) = 0.021 mW/g; SAR(10 g) = 0.011 mW/g

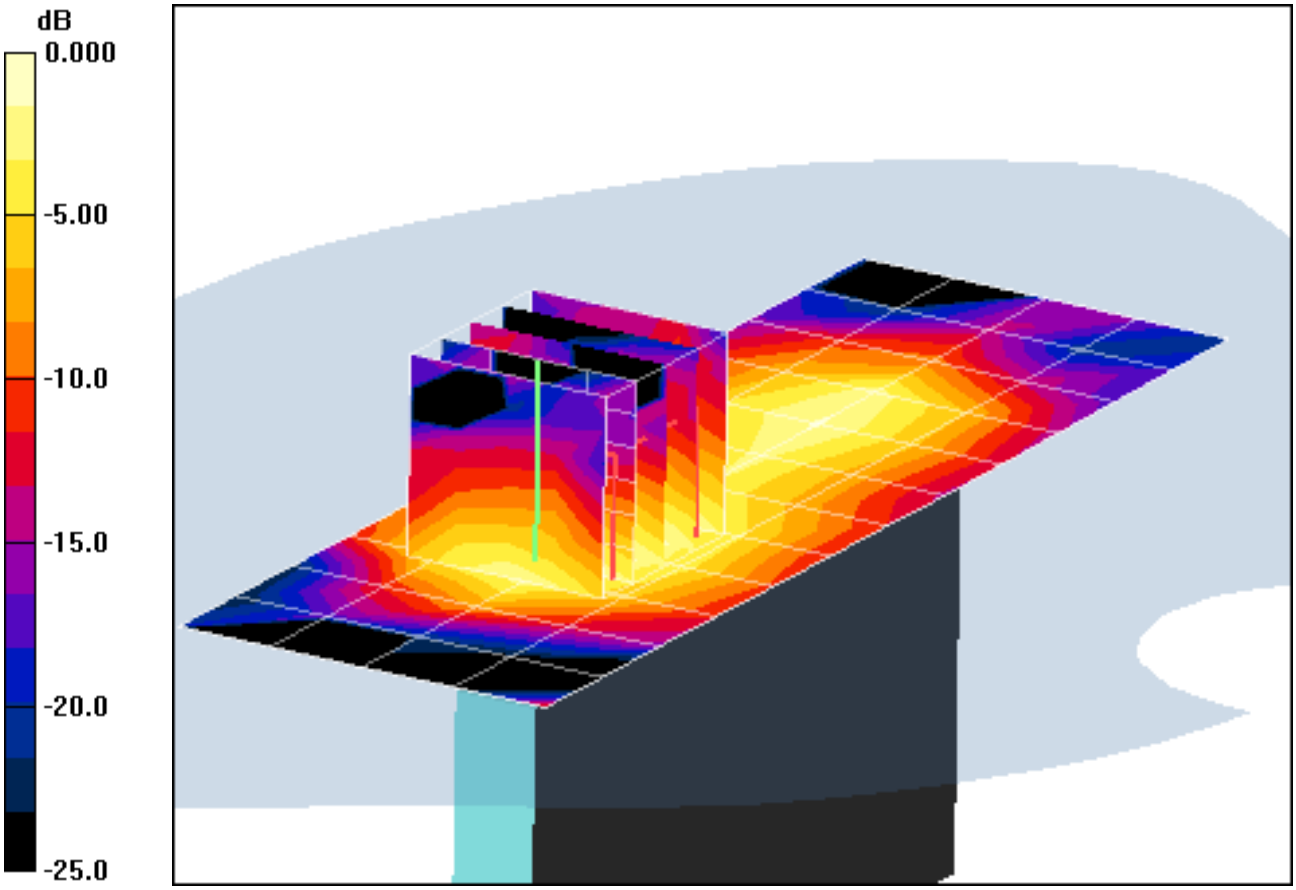

0 dB = 0.026mW/g

PCTEST ENGINEERING LABORATORY, INC.

DUT: A3LGTS5830L; Type: 850/1900 GSM/GPRS/EDGE/WCDMA Phone with Bluetooth and WLAN; Serial: FH-293-A

Communication System: IEEE 802.11b; Frequency: 2412 MHz;Duty Cycle: 1:1
Medium: 2450 Body Medium parameters used (interpolated):
f = 2412 MHz; σ = 1.97 mho/m; ε_r = 50.5; ρ = 1000 kg/m^3
Phantom section: Flat Section; Space: 1.0 cm

Test Date: 01-06-2011; Ambient Temp: 24.1 °C; Tissue Temp: 22.3 °C

Probe: ES3DV2 - SN3022; ConvF(4.06, 4.06, 4.06); Calibrated: 9/21/2010
Sensor-Surface: 3mm (Mechanical Surface Detection)
Electronics: DAE3 Sn455; Calibrated: 11/18/2010
Phantom: SAM Main; Type: SAM 4.0; Serial: TP-1406
Measurement SW: DASY4, V4.7 Build 80; Postprocessing SW: SEMCAD, V1.8 Build 186

Mode: IEEE 802.11b, Body SAR, Ch 01, 1 Mbps, Left Edge

Area Scan (5x13x1): Measurement grid: dx=15mm, dy=15mm
Zoom Scan (5x5x7)/Cube 0: Measurement grid: dx=8mm, dy=8mm, dz=5mm
Reference Value = 0.834 V/m
Peak SAR (extrapolated) = 0.013 W/kg
SAR(1 g) = 0.00504 mW/g; SAR(10 g) = 0.00234 mW/g

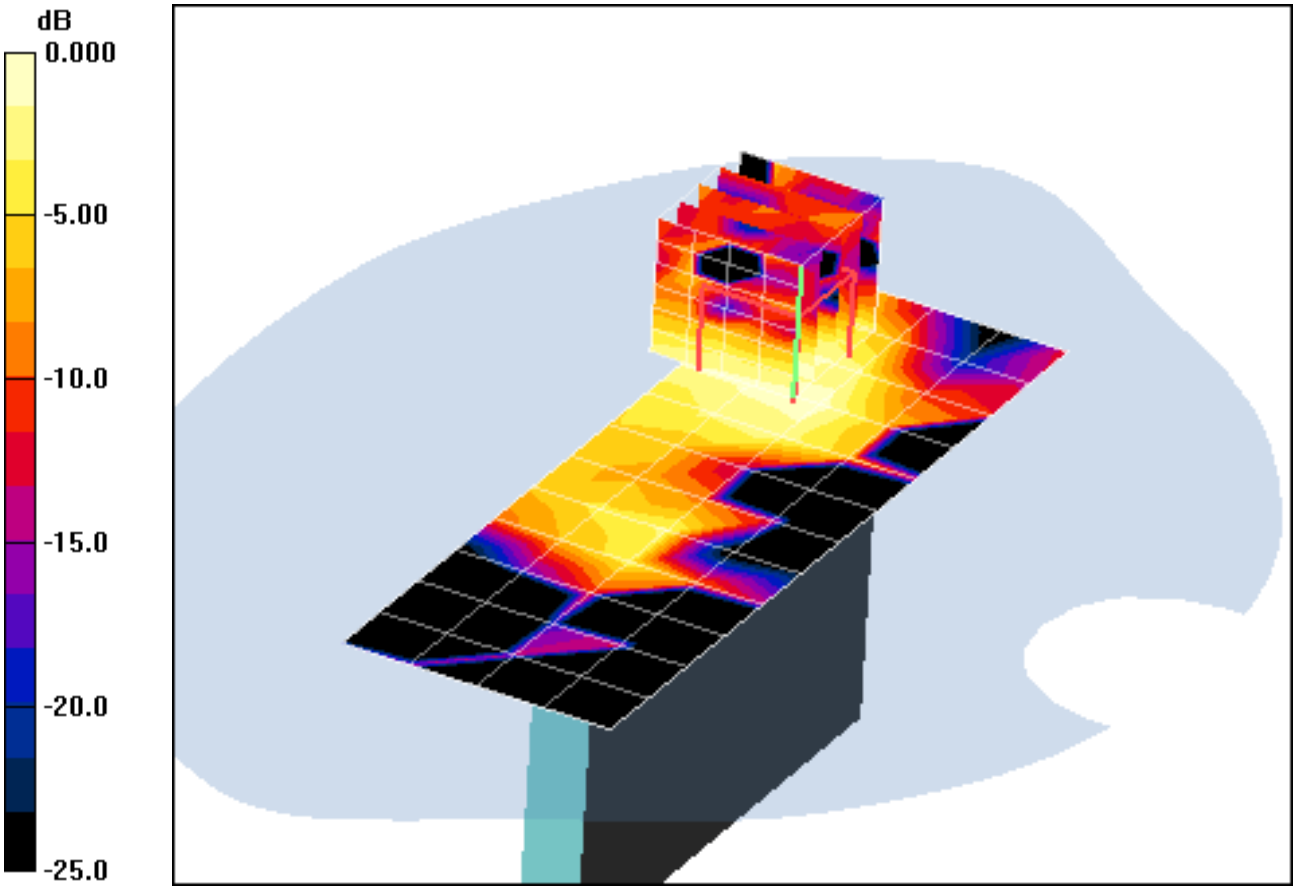

0 dB = 0.007mW/g

APPENDIX B: DIPOLE VALIDATION

PCTEST ENGINEERING LABORATORY, INC.

DUT: Dipole 835 MHz; Type: D835V2; Serial: 4d026

Communication System: CW; Frequency: 835 MHz;Duty Cycle: 1:1
Medium: 835 Head Medium parameters used:
f = 835 MHz; σ = 0.902 mho/m; ε_r = 41.7; ρ = 1000 kg/m^3
Phantom section: Flat Section; Space: 1.5 cm

Test Date: 01-03-2011; Ambient Temp: 23.6 °C; Tissue Temp: 21.8 °C

Probe: EX3DV4 - SN3550; ConvF(8.28, 8.28, 8.28); Calibrated: 1/26/2010
Sensor-Surface: 4mm (Mechanical Surface Detection)
Electronics: DAE4 Sn649; Calibrated: 1/22/2010
Phantom: SAM Main; Type: SAM 4.0; Serial: TP-1114
Measurement SW: DASY4, V4.7 Build 80; Postprocessing SW: SEMCAD, V1.8 Build 186

835MHz System Verification

Area Scan (7x13x1): Measurement grid: dx=15mm, dy=15mm
Zoom Scan (5x5x7)/Cube 0: Measurement grid: dx=8mm, dy=8mm, dz=5mm
Input Power = 20.0 dBm (100 mW)
SAR(1 g) = 0.958 mW/g; SAR(10 g) = 0.621 mW/g
Deviation = 1.27 %

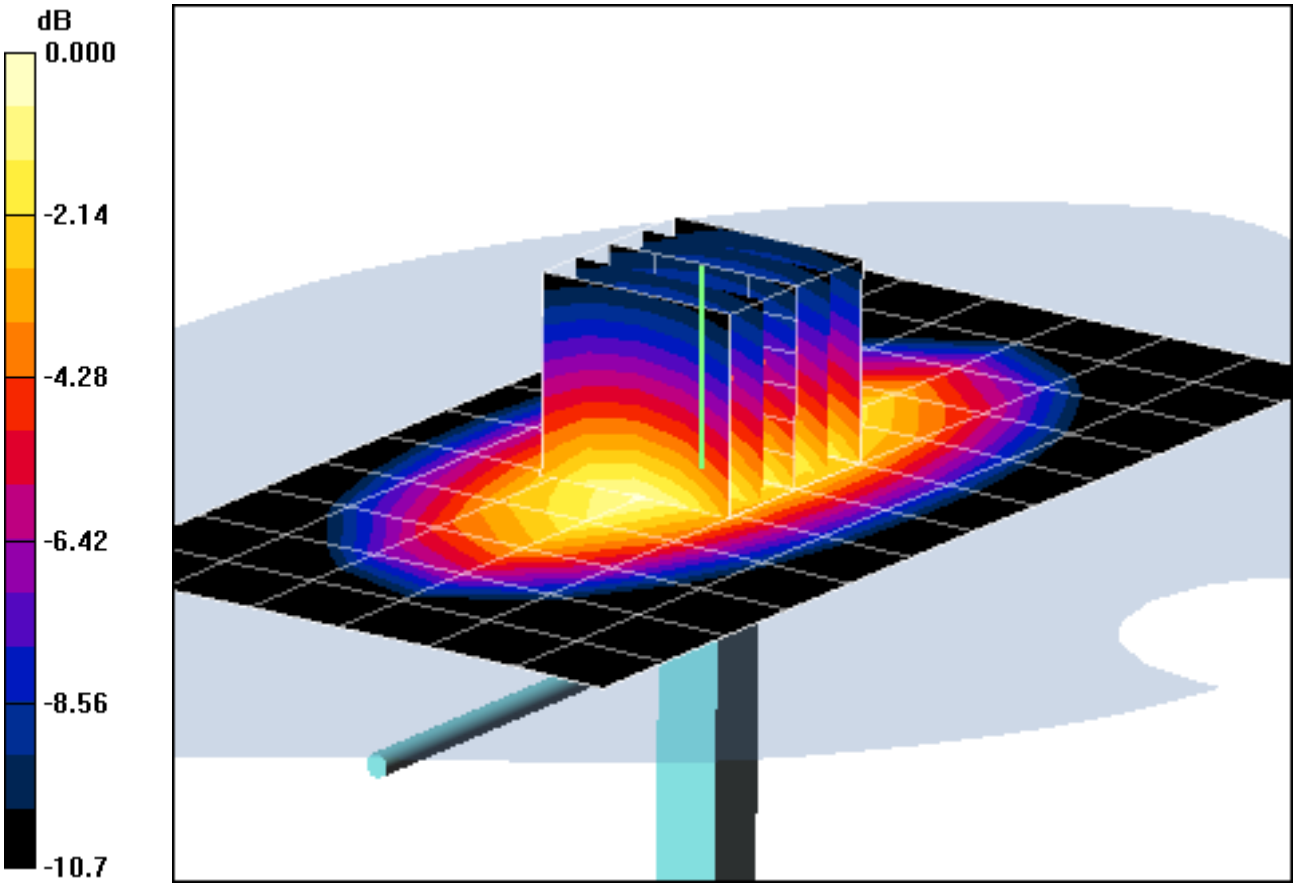

0 dB = 1.04mW/g

PCTEST ENGINEERING LABORATORY, INC.

DUT: Dipole 835 MHz; Type: D835V2; Serial: 4d047

Communication System: CW; Frequency: 835 MHz;Duty Cycle: 1:1
Medium: 835 Head Medium parameters used:
f = 835 MHz; σ = 0.926 mho/m; ε_r = 43.3; ρ = 1000 kg/m^3
Phantom section: Flat Section; Space: 1.5 cm

Test Date: 01-05-2011; Ambient Temp: 24.1 °C; Tissue Temp: 22.9 °C

Probe: ES3DV2 - SN3022; ConvF(6.02, 6.02, 6.02); Calibrated: 9/21/2010
Sensor-Surface: 3mm (Mechanical Surface Detection)
Electronics: DAE3 Sn455; Calibrated: 11/18/2010
Phantom: SAM Sub; Type: SAM 4.0; Serial: TP-1403
Measurement SW: DASY4, V4.7 Build 80; Postprocessing SW: SEMCAD, V1.8 Build 186

835MHz System Verification

Area Scan (7x13x1): Measurement grid: dx=15mm, dy=15mm
Zoom Scan (5x5x7)/Cube 0: Measurement grid: dx=8mm, dy=8mm, dz=5mm
Input Power = 18.0 dBm (63 mW)
SAR(1 g) = 0.616 mW/g; SAR(10 g) = 0.401 mW/g
Deviation = 0.80 %

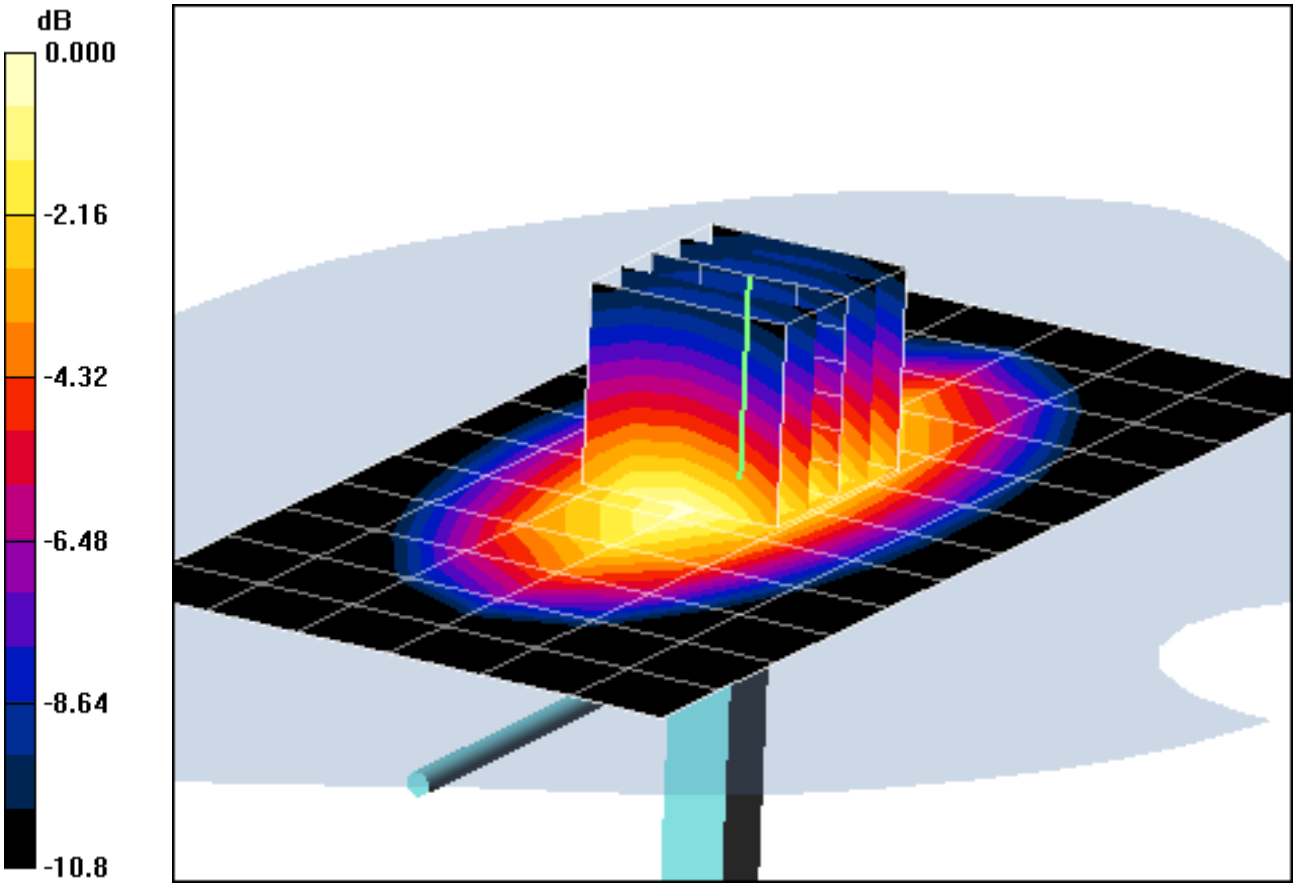

0 dB = 0.724mW/g

PCTEST ENGINEERING LABORATORY, INC.

DUT: SAR Dipole 1900 MHz; Type: D1900V2; Serial: 5d080

Communication System: CW; Frequency: 1900 MHz;Duty Cycle: 1:1
Medium: 1900 Head Medium parameters used (interpolated):
f = 1900 MHz; σ = 1.42 mho/m; ε_r = 41; ρ = 1000 kg/m^3
Phantom section: Flat Section; Space: 1.0 cm

Test Date: 01-04-2011; Ambient Temp: 22.4 °C; Tissue Temp: 21.8 °C

Probe: EX3DV4 - SN3561; ConvF(6.69, 6.69, 6.69); Calibrated: 8/19/2010
Sensor-Surface: 4mm (Mechanical Surface Detection)
Electronics: DAE4 Sn665; Calibrated: 4/21/2010
Phantom: SAM with CRP; Type: SAM; Serial: TP1375
Measurement SW: DASY4, V4.7 Build 80; Postprocessing SW: SEMCAD, V1.8 Build 186

1900MHz System Verification

Area Scan (5x7x1): Measurement grid: dx=15mm, dy=15mm
Zoom Scan (5x5x7)/Cube 0: Measurement grid: dx=8mm, dy=8mm, dz=5mm
Input Power = 20.0 dBm (100 mW)
SAR(1 g) = 4.01 mW/g; SAR(10 g) = 2.04 mW/g
Deviation = 0.00 %

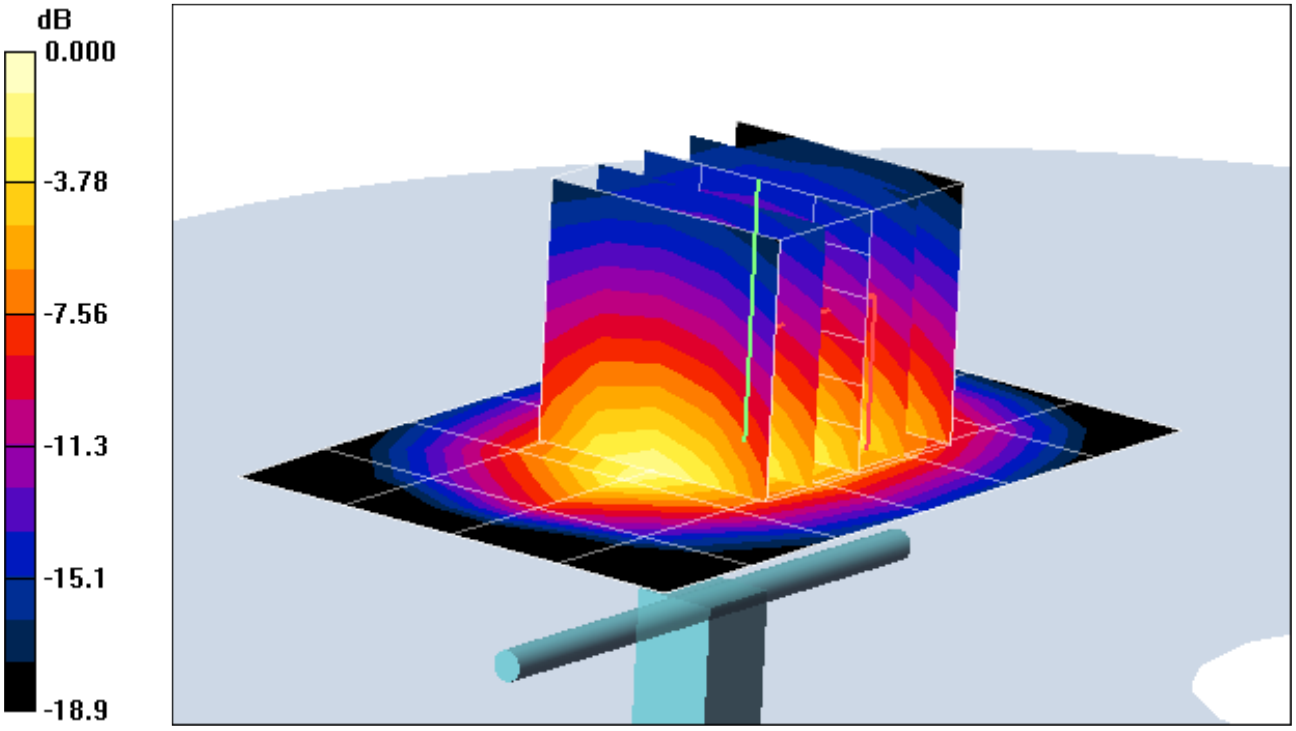

0 dB = 4.42mW/g

PCTEST ENGINEERING LABORATORY, INC.

DUT: SAR Dipole 1900 MHz; Type: D1900V2; Serial: 5d080

Communication System: CW; Frequency: 1900 MHz;Duty Cycle: 1:1
Medium: 1900 Body Medium parameters used (interpolated):
f = 1900 MHz; σ = 1.51 mho/m; ε_r = 52.2; ρ = 1000 kg/m^3
Phantom section: Flat Section; Space: 1.0 cm

Test Date: 01-04-2011; Ambient Temp: 23.8 °C; Tissue Temp: 22.4 °C

Probe: ES3DV2 - SN3022; ConvF(4.34, 4.34, 4.34); Calibrated: 9/21/2010
Sensor-Surface: 4mm (Mechanical Surface Detection)
Electronics: DAE3 Sn455; Calibrated: 11/18/2010
Phantom: SAM Main; Type: SAM 4.0; Serial: TP-1406
Measurement SW: DASY4, V4.7 Build 80; Postprocessing SW: SEMCAD, V1.8 Build 186

1900MHz System Verification

Area Scan (5x7x1): Measurement grid: dx=15mm, dy=15mm
Zoom Scan (5x5x7)/Cube 0: Measurement grid: dx=8mm, dy=8mm, dz=5mm
Input Power = 14.0 dBm (25 mW)
SAR(1 g) = 1.02 mW/g; SAR(10 g) = 0.540 mW/g
Deviation = 0.74 %

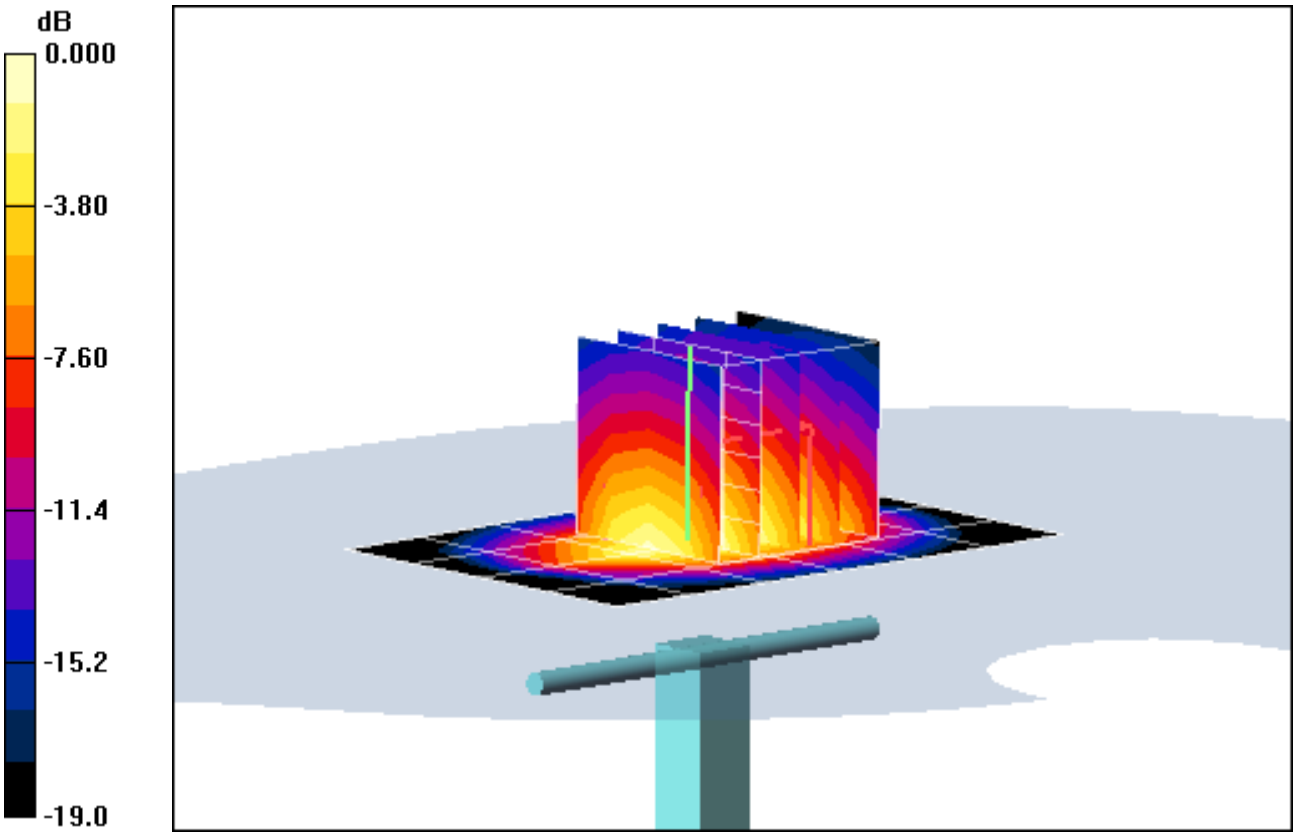

0 dB = 1.15mW/g

PCTEST ENGINEERING LABORATORY, INC.

DUT: SAR Dipole 2450 MHz; Type: D2450V2; Serial: 719

Communication System: CW; Frequency: 2450 MHz;Duty Cycle: 1:1
Medium: 2450 Head Medium parameters used:
f = 2450 MHz; σ = 1.85 mho/m; ε_r = 39.6; ρ = 1000 kg/m^3
Phantom section: Flat Section; Space: 1.0 cm

Test Date: 01-05-2011; Ambient Temp: 23.3 °C; Tissue Temp: 21.9 °C

Probe: EX3DV4 - SN3561; ConvF(6.11, 6.11, 6.11); Calibrated: 8/19/2010
Sensor-Surface: 3mm (Mechanical Surface Detection)
Electronics: DAE4 Sn665; Calibrated: 4/21/2010
Phantom: SAM with CRP; Type: SAM; Serial: TP1375
Measurement SW: DASY4, V4.7 Build 80; Postprocessing SW: SEMCAD, V1.8 Build 186

2450MHz System Verification

Area Scan (5x7x1): Measurement grid: dx=15mm, dy=15mm
Zoom Scan (5x5x7)/Cube 0: Measurement grid: dx=8mm, dy=8mm, dz=5mm
Input Power = 12.0 dBm (15.8 mW)
SAR(1 g) = 0.802 mW/g; SAR(10 g) = 0.362 mW/g
Deviation = - 5.12 %

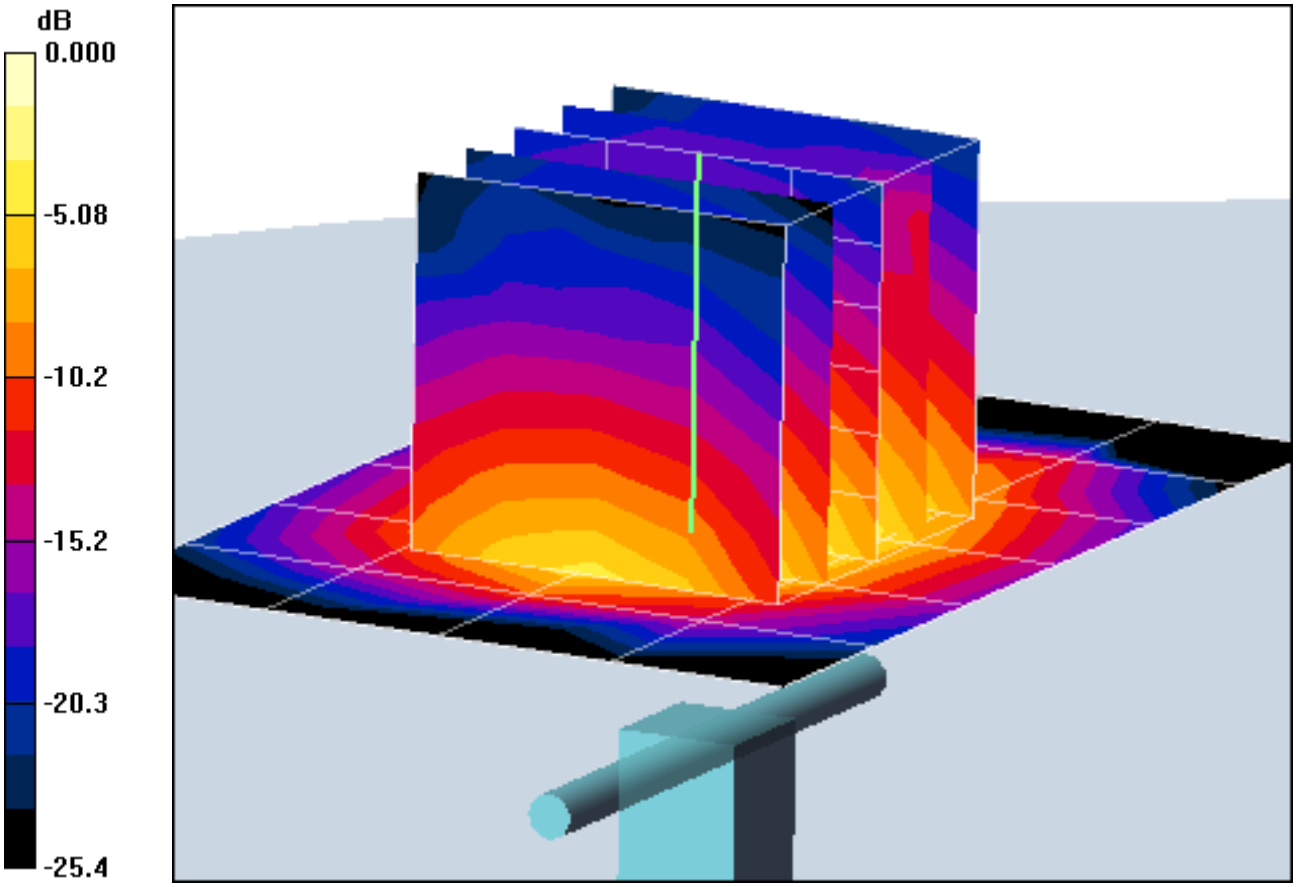

0 dB = 0.750mW/g

PCTEST ENGINEERING LABORATORY, INC.

DUT: SAR Dipole 2450 MHz; Type: D2450V2; Serial: 719

Communication System: CW; Frequency: 2450 MHz;Duty Cycle: 1:1
Medium: 2450 Body Medium parameters used:
f = 2450 MHz; σ = 2.01 mho/m; ε_r = 50.3; ρ = 1000 kg/m^3
Phantom section: Flat Section; Space: 1.0 cm

Test Date: 01-06-2011; Ambient Temp: 24.1 °C; Tissue Temp: 22.3 °C

Probe: ES3DV2 - SN3022; ConvF(4.06, 4.06, 4.06); Calibrated: 9/21/2010
Sensor-Surface: 3mm (Mechanical Surface Detection)
Electronics: DAE3 Sn455; Calibrated: 11/18/2010
Phantom: SAM Main; Type: SAM 4.0; Serial: TP-1406
Measurement SW: DASY4, V4.7 Build 80; Postprocessing SW: SEMCAD, V1.8 Build 186

2450MHz System Verification

Area Scan (5x7x1): Measurement grid: dx=15mm, dy=15mm
Zoom Scan (5x5x7)/Cube 0: Measurement grid: dx=8mm, dy=8mm, dz=5mm
Input Power = 14 dBm (25 mW)
SAR(1 g) = 1.36 mW/g; SAR(10 g) = 0.619 mW/g
Deviation = 5.84 %

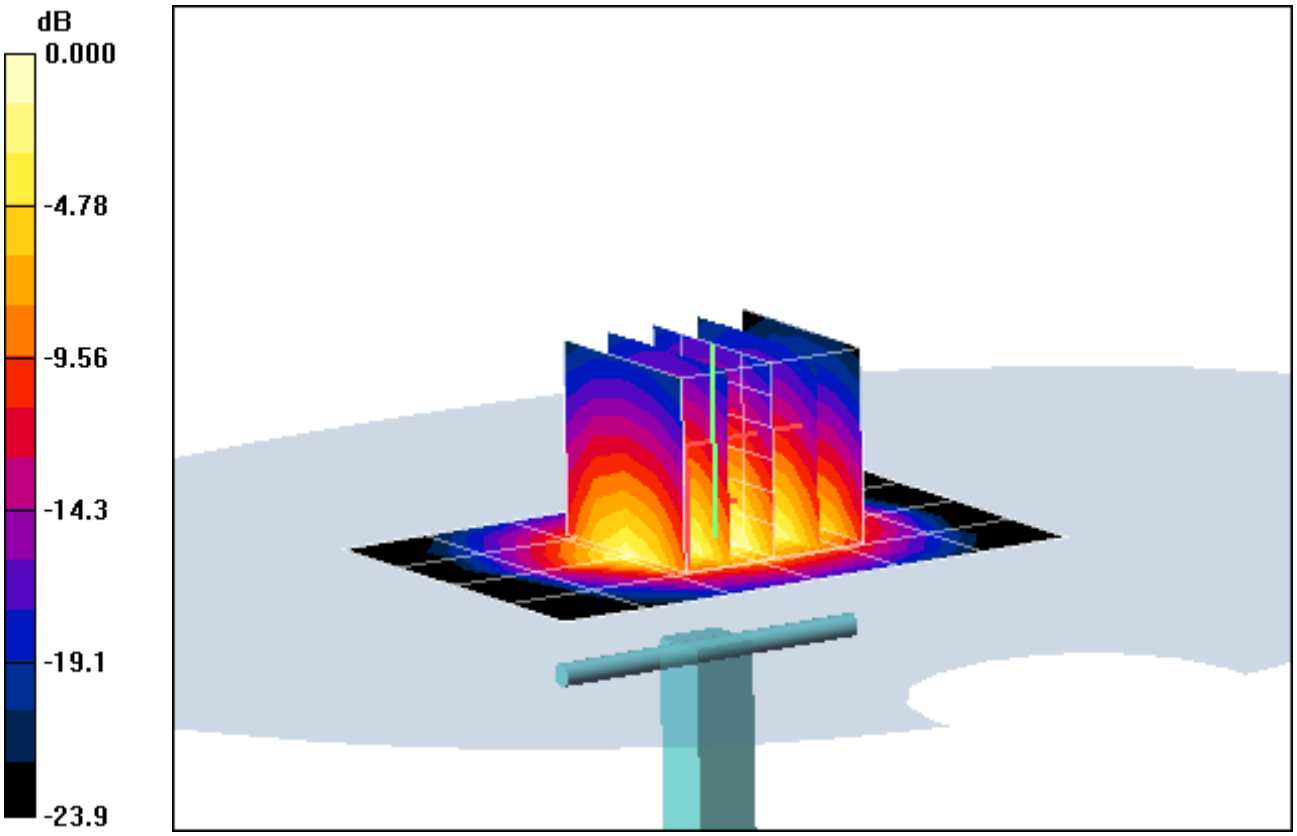

0 dB = 1.79mW/g

APPENDIX C: PROBE CALIBRATION

Calibration Laboratory of
Schmid & Partner
Engineering AG
Zeughausstrasse 43, 8004 Zurich, Switzerland

S Schweizerischer Kalibrierdienst
C Service suisse d'étalonnage
Servizio svizzero di taratura
S Swiss Calibration Service

Accredited by the Swiss Accreditation Service (SAS)
The Swiss Accreditation Service is one of the signatories to the EA Multilateral Agreement for the recognition of calibration certificates

Accreditation No.: SCS 108

Client PC Test

Certificate No: EX3-3550_Jan10

CALIBRATION CERTIFICATE

Object	EX3DV4 - SN:3550
Calibration procedure(s)	QA CAL-01.v6, QA CAL-14.v3, QA CAL-23.v3 and QA CAL-25.v2 Calibration procedure for dosimetric E-field probes
Calibration date:	January 26, 2010

1/20/10

This calibration certificate documents the traceability to national standards, which realize the physical units of measurements (SI).
The measurements and the uncertainties with confidence probability are given on the following pages and are part of the certificate.

All calibrations have been conducted in the closed laboratory facility: environment temperature (22 ± 3)°C and humidity < 70%.

Calibration Equipment used (M&TE critical for calibration)

Primary Standards	ID #	Cal Date (Certificate No.)	Scheduled Calibration
Power meter E4419B	GB41293874	1-Apr-09 (No. 217-01030)	Apr-10
Power sensor E4412A	MY41495277	1-Apr-09 (No. 217-01030)	Apr-10
Power sensor E4412A	MY41498087	1-Apr-09 (No. 217-01030)	Apr-10
Reference 3 dB Attenuator	SN: S5054 (3c)	31-Mar-09 (No. 217-01026)	Mar-10
Reference 20 dB Attenuator	SN: S5086 (20b)	31-Mar-09 (No. 217-01028)	Mar-10
Reference 30 dB Attenuator	SN: S5129 (30b)	31-Mar-09 (No. 217-01027)	Mar-10
Reference Probe ES3DV2	SN: 3013	30-Dec-09 (No. ES3-3013_Dec09)	Dec-10
DAE4	SN: 660	29-Sep-09 (No. DAE4-660_Sep09)	Sep-10

Secondary Standards	ID #	Check Date (in house)	Scheduled Check
RF generator HP 8648C	US3642U01700	4-Aug-99 (in house check Oct-09)	In house check: Oct-11
Network Analyzer HP 8753E	US37390585	18-Oct-01 (in house check Oct-09)	In house check: Oct10

	Name	Function	Signature
Calibrated by:	Katja Pokovic	Technical Manager	
Approved by:	Fin Bomholt	R&D Director	

Issued: January 26, 2010

This calibration certificate shall not be reproduced except in full without written approval of the laboratory.

Glossary:

TSL	tissue simulating liquid
NORMx,y,z	sensitivity in free space
ConvF	sensitivity in TSL / NORMx,y,z
DCP	diode compression point
CF	crest factor (1/duty_cycle) of the RF signal
A, B, C	modulation dependent linearization parameters
Polarization φ	φ rotation around probe axis
Polarization ϑ	ϑ rotation around an axis that is in the plane normal to probe axis (at measurement center), i.e., ϑ = 0 is normal to probe axis

Calibration is Performed According to the Following Standards:

a) IEEE Std 1528-2003, "IEEE Recommended Practice for Determining the Peak Spatial-Averaged Specific Absorption Rate (SAR) in the Human Head from Wireless Communications Devices: Measurement Techniques", December 2003
b) IEC 62209-1, "Procedure to measure the Specific Absorption Rate (SAR) for hand-held devices used in close proximity to the ear (frequency range of 300 MHz to 3 GHz)", February 2005

Methods Applied and Interpretation of Parameters:

- *NORMx,y,z:* Assessed for E-field polarization ϑ = 0 (f ≤ 900 MHz in TEM-cell; f > 1800 MHz: R22 waveguide). NORMx,y,z are only intermediate values, i.e., the uncertainties of NORMx,y,z does not effect the E^2-field uncertainty inside TSL (see below *ConvF*).
- *NORM(f)x,y,z = NORMx,y,z * frequency_response* (see Frequency Response Chart). This linearization is implemented in DASY4 software versions later than 4.2. The uncertainty of the frequency response is included in the stated uncertainty of *ConvF*.
- *DCPx,y,z:* DCP are numerical linearization parameters assessed based on the data of power sweep with CW signal (no uncertainty required). DCP does not depend on frequency nor media.
- *Ax,y,z; Bx,y,z; Cx,y,z, VRx,y,z: A, B, C* are numerical linearization parameters assessed based on the data of power sweep for specific modulation signal. The parameters do not depend on frequency nor media. *VR* is the maximum calibration range expressed in RMS voltage across the diode.
- *ConvF and Boundary Effect Parameters:* Assessed in flat phantom using E-field (or Temperature Transfer Standard for f ≤ 800 MHz) and inside waveguide using analytical field distributions based on power measurements for f > 800 MHz. The same setups are used for assessment of the parameters applied for boundary compensation (alpha, depth) of which typical uncertainty values are given. These parameters are used in DASY4 software to improve probe accuracy close to the boundary. The sensitivity in TSL corresponds to *NORMx,y,z * ConvF* whereby the uncertainty corresponds to that given for *ConvF*. A frequency dependent *ConvF* is used in DASY version 4.4 and higher which allows extending the validity from ± 50 MHz to ± 100 MHz.
- *Spherical isotropy (3D deviation from isotropy)*: in a field of low gradients realized using a flat phantom exposed by a patch antenna.
- *Sensor Offset*: The sensor offset corresponds to the offset of virtual measurement center from the probe tip (on probe axis). No tolerance required.

Probe EX3DV4

SN:3550

Manufactured:	May 19, 2004
Last calibrated:	January 21, 2009
Recalibrated:	January 26, 2010

Calibrated for DASY Systems

(Note: non-compatible with DASY2 system!)

DASY - Parameters of Probe: EX3DV4 SN:3550

Basic Calibration Parameters

	Sensor X	Sensor Y	Sensor Z	Unc (k=2)
Norm ($\mu V/(V/m)^2$)[A]	0.48	0.47	0.48	± 10.1%
DCP (mV)[B]	92.9	88.4	91.4	

Modulation Calibration Parameters

UID	Communication System Name	PAR		A dB	B dBuV	C	VR mV	Unc[E] (k=2)
10000	CW	0.00	X	0.00	0.00	1.00	300	± 1.5%
			Y	0.00	0.00	1.00	300	
			Z	0.00	0.00	1.00	300	

The reported uncertainty of measurement is stated as the standard uncertainty of measurement multiplied by the coverage factor k=2, which for a normal distribution corresponds to a coverage probability of approximately 95%.

[A] The uncertainties of NormX,Y,Z do not affect the E^2-field uncertainty inside TSL (see Pages 5 and 6).

[B] Numerical linearization parameter: uncertainty not required.

[E] Uncertainty is determined using the maximum deviation from linear response applying recatangular distribution and is expressed for the square of the field value.

DASY - Parameters of Probe: EX3DV4 SN:3550

Calibration Parameter Determined in Head Tissue Simulating Media

f [MHz]	Validity [MHz][C]	Permittivity	Conductivity	ConvF X	ConvF Y	ConvF Z	Alpha	Depth Unc (k=2)
835	± 50 / ± 100	41.5 ± 5%	0.90 ± 5%	8.28	8.28	8.28	0.45	0.70 ± 11.0%
1750	± 50 / ± 100	40.1 ± 5%	1.37 ± 5%	7.03	7.03	7.03	0.39	0.75 ± 11.0%
1900	± 50 / ± 100	40.0 ± 5%	1.40 ± 5%	6.81	6.81	6.81	0.32	0.81 ± 11.0%
2450	± 50 / ± 100	39.2 ± 5%	1.80 ± 5%	6.21	6.21	6.21	0.22	1.07 ± 11.0%

[C] The validity of ± 100 MHz only applies for DASY v4.4 and higher (see Page 2). The uncertainty is the RSS of the ConvF uncertainty at calibration frequency and the uncertainty for the indicated frequency band.

DASY - Parameters of Probe: EX3DV4 SN:3550

Calibration Parameter Determined in Body Tissue Simulating Media

f [MHz]	Validity [MHz][C]	Permittivity	Conductivity	ConvF X	ConvF Y	ConvF Z	Alpha	Depth	Unc (k=2)
835	± 50 / ± 100	55.2 ± 5%	0.97 ± 5%	8.30	8.30	8.30	0.47	0.76	± 11.0%
1750	± 50 / ± 100	53.4 ± 5%	1.49 ± 5%	6.90	6.90	6.90	0.49	0.69	± 11.0%
1900	± 50 / ± 100	53.3 ± 5%	1.52 ± 5%	6.63	6.63	6.63	0.76	0.54	± 11.0%
2450	± 50 / ± 100	52.7 ± 5%	1.95 ± 5%	6.40	6.40	6.40	0.22	1.09	± 11.0%
2600	± 50 / ± 100	52.5 ± 5%	2.16 ± 5%	6.26	6.26	6.26	0.19	1.42	± 11.0%
4950	± 50 / ± 100	49.4 ± 5%	5.01 ± 5%	3.64	3.64	3.64	0.50	1.75	± 13.1%
5200	± 50 / ± 100	49.0 ± 5%	5.30 ± 5%	3.73	3.73	3.73	0.50	1.75	± 13.1%
5300	± 50 / ± 100	48.5 ± 5%	5.42 ± 5%	3.52	3.52	3.52	0.52	1.75	± 13.1%
5500	± 50 / ± 100	48.6 ± 5%	5.65 ± 5%	3.26	3.26	3.26	0.55	1.80	± 13.1%
5600	± 50 / ± 100	48.5 ± 5%	5.77 ± 5%	3.16	3.16	3.16	0.65	1.80	± 13.1%
5800	± 50 / ± 100	48.2 ± 5%	6.00 ± 5%	3.30	3.30	3.30	0.60	1.75	± 13.1%

[C] The validity of ± 100 MHz only applies for DASY v4.4 and higher (see Page 2). The uncertainty is the RSS of the ConvF uncertainty at calibration frequency and the uncertainty for the indicated frequency band.

Frequency Response of E-Field

(TEM-Cell:ifi110 EXX, Waveguide: R22)

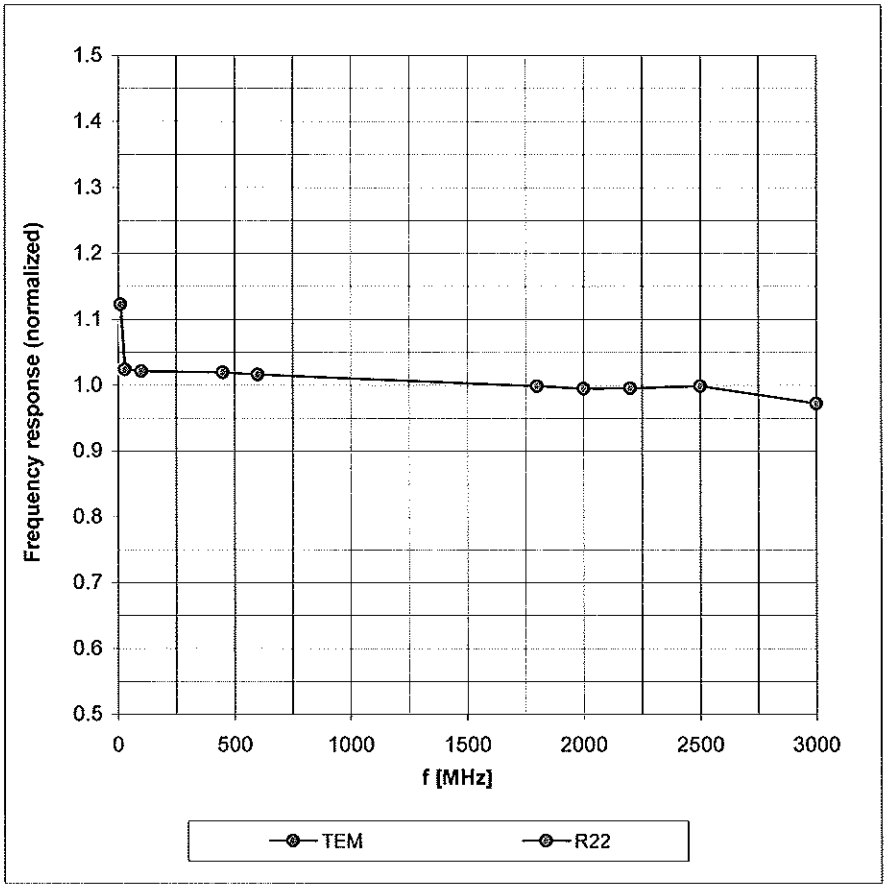

Uncertainty of Frequency Response of E-field: ± 6.3% (k=2)

Receiving Pattern (ϕ), ϑ = 0°

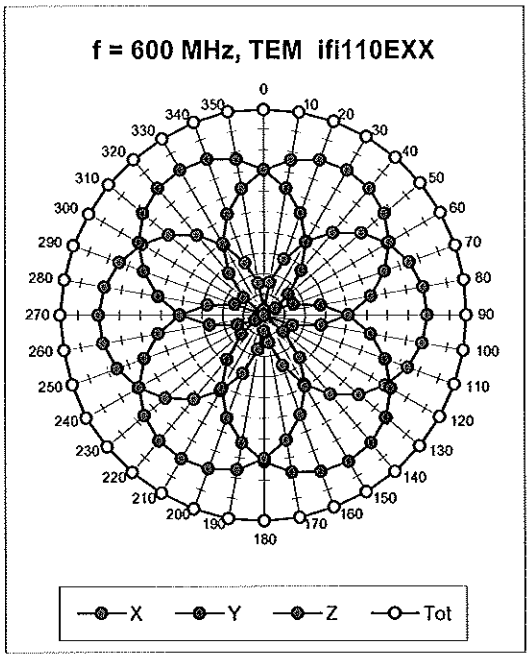

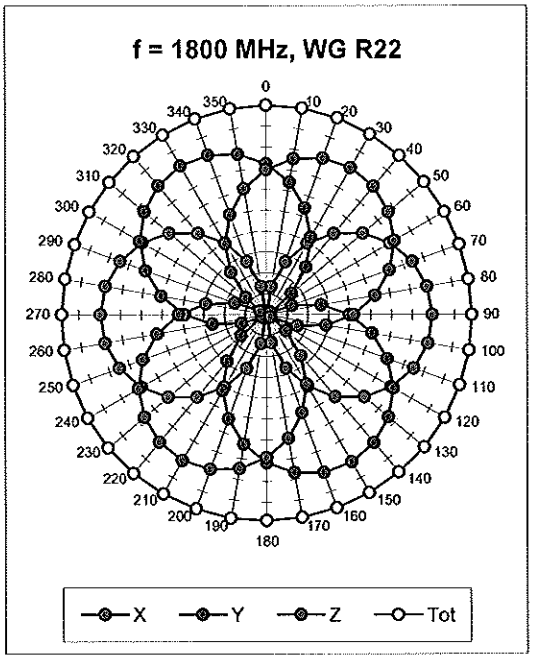

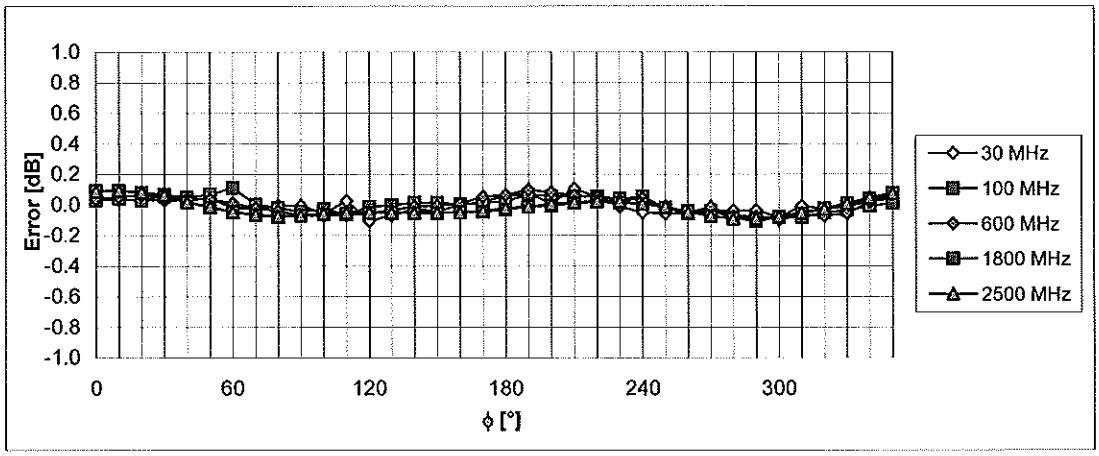

Uncertainty of Axial Isotropy Assessment: ± 0.5% (k=2)

Dynamic Range f(SAR_{head})

(Waveguide R22, f = 1800 MHz)

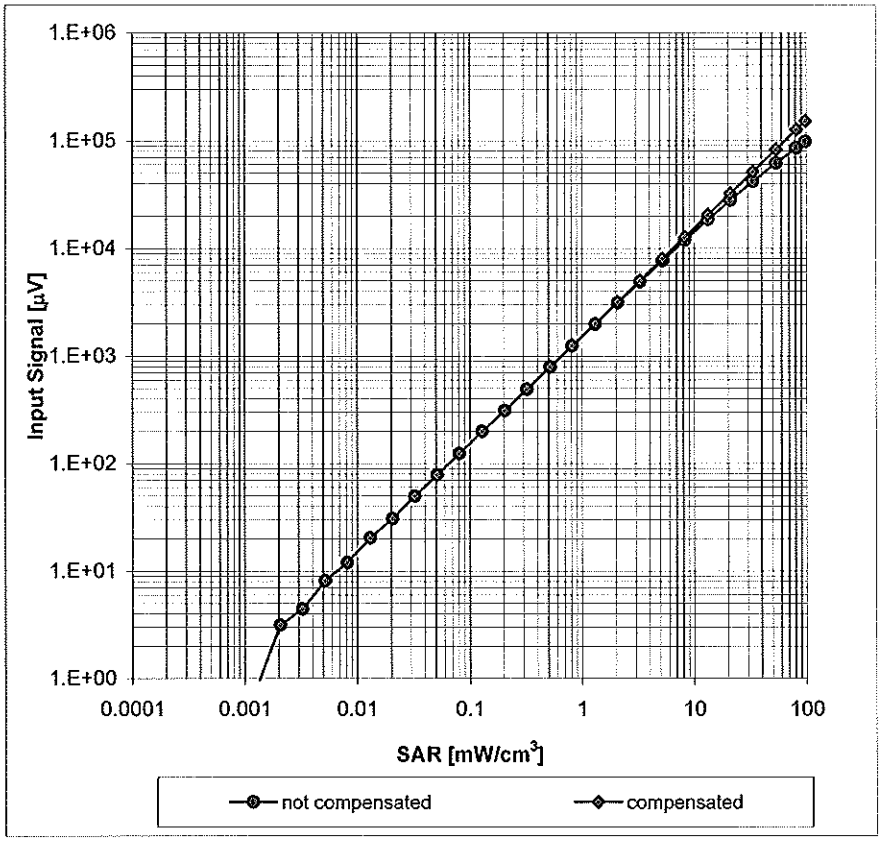

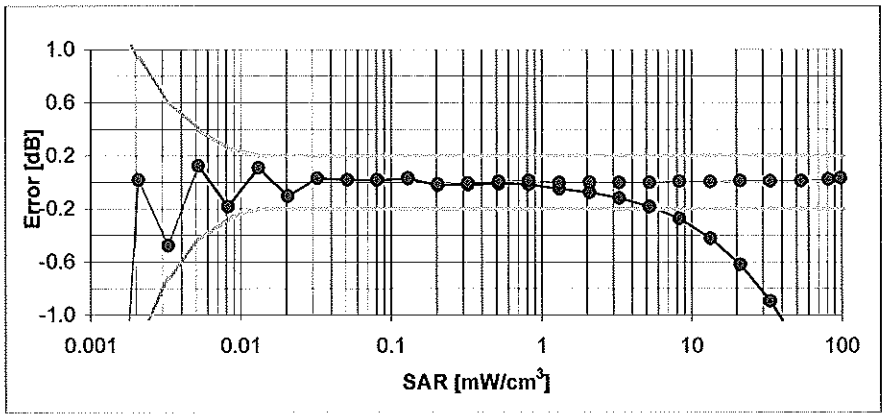

Uncertainty of Linearity Assessment: ± 0.6% (k=2)

Conversion Factor Assessment

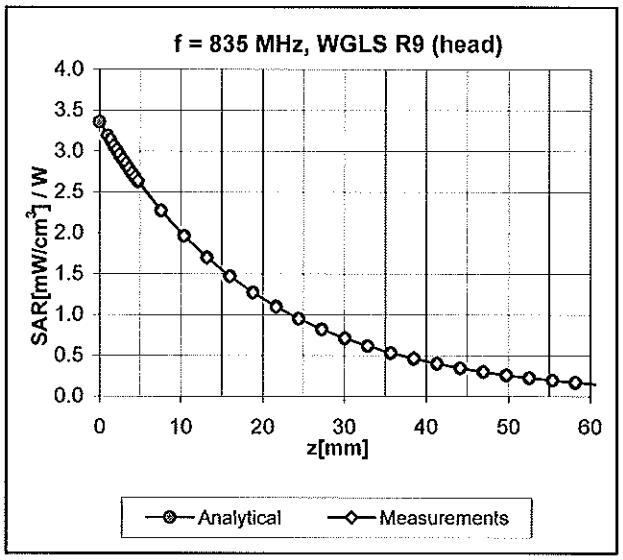

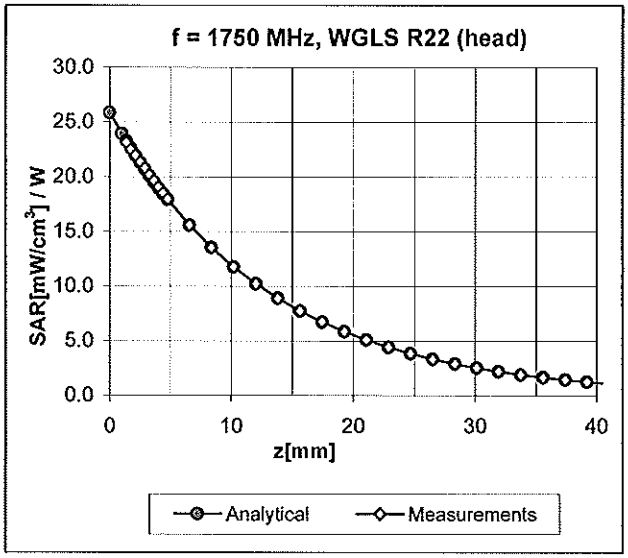

Deviation from Isotropy in HSL

Error (ϕ, ϑ), f = 900 MHz

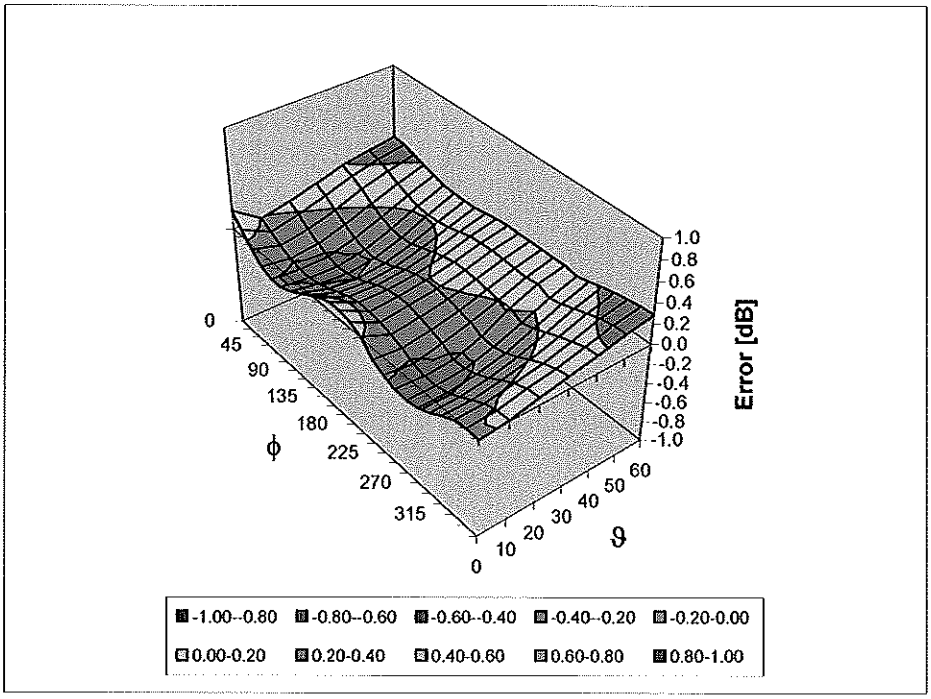

Uncertainty of Spherical Isotropy Assessment: ± 2.6% (k=2)

Other Probe Parameters

Sensor Arrangement	Triangular
Connector Angle (°)	Not applicable
Mechanical Surface Detection Mode	enabled
Optical Surface Detection Mode	disabled
Probe Overall Length	337 mm
Probe Body Diameter	10 mm
Tip Length	9 mm
Tip Diameter	2.5 mm
Probe Tip to Sensor X Calibration Point	1 mm
Probe Tip to Sensor Y Calibration Point	1 mm
Probe Tip to Sensor Z Calibration Point	1 mm
Recommended Measurement Distance from Surface	2 mm

Calibration Laboratory of
Schmid & Partner
Engineering AG
Zeughausstrasse 43, 8004 Zurich, Switzerland

S Schweizerischer Kalibrierdienst
C Service suisse d'étalonnage
Servizio svizzero di taratura
S Swiss Calibration Service

Accredited by the Swiss Accreditation Service (SAS)
The Swiss Accreditation Service is one of the signatories to the EA Multilateral Agreement for the recognition of calibration certificates

Accreditation No.: SCS 108

Client **PC Test**

Certificate No: EX3-3561_Aug10

CALIBRATION CERTIFICATE

Object	EX3DV4 - SN:3561
Calibration procedure(s)	QA CAL-01.v6, QA CAL-14.v3, QA CAL-23.v3 and QA CAL-25.v2 Calibration procedure for dosimetric E-field probes
Calibration date:	August 19, 2010

KOK 8/30/10

This calibration certificate documents the traceability to national standards, which realize the physical units of measurements (SI).
The measurements and the uncertainties with confidence probability are given on the following pages and are part of the certificate.

All calibrations have been conducted in the closed laboratory facility: environment temperature (22 ± 3)°C and humidity < 70%.

Calibration Equipment used (M&TE critical for calibration)

Primary Standards	ID #	Cal Date (Certificate No.)	Scheduled Calibration
Power meter E4419B	GB41293874	1-Apr-10 (No. 217-01136)	Apr-11
Power sensor E4412A	MY41495277	1-Apr-10 (No. 217-01136)	Apr-11
Power sensor E4412A	MY41498087	1-Apr-10 (No. 217-01136)	Apr-11
Reference 3 dB Attenuator	SN: S5054 (3c)	30-Mar-10 (No. 217-01159)	Mar-11
Reference 20 dB Attenuator	SN: S5086 (20b)	30-Mar-10 (No. 217-01161)	Mar-11
Reference 30 dB Attenuator	SN: S5129 (30b)	30-Mar-10 (No. 217-01160)	Mar-11
Reference Probe ES3DV2	SN: 3013	30-Dec-09 (No. ES3-3013_Dec09)	Dec-10
DAE4	SN: 660	20-Apr-10 (No. DAE4-660_Apr10)	Apr-11

Secondary Standards	ID #	Check Date (in house)	Scheduled Check
RF generator HP 8648C	US3642U01700	4-Aug-99 (in house check Oct-09)	In house check: Oct-11
Network Analyzer HP 8753E	US37390585	18-Oct-01 (in house check Oct-09)	In house check: Oct10

	Name	Function	Signature
Calibrated by:	Katja Pokovic	Technical Manager	
Approved by:	Niels Kuster	Quality Manager	

Issued: August 20, 2010

This calibration certificate shall not be reproduced except in full without written approval of the laboratory.

Glossary:

TSL	tissue simulating liquid
NORMx,y,z	sensitivity in free space
ConvF	sensitivity in TSL / NORMx,y,z
DCP	diode compression point
CF	crest factor (1/duty_cycle) of the RF signal
A, B, C	modulation dependent linearization parameters
Polarization φ	φ rotation around probe axis
Polarization ϑ	ϑ rotation around an axis that is in the plane normal to probe axis (at measurement center), i.e., ϑ = 0 is normal to probe axis

Calibration is Performed According to the Following Standards:

a) IEEE Std 1528-2003, "IEEE Recommended Practice for Determining the Peak Spatial-Averaged Specific Absorption Rate (SAR) in the Human Head from Wireless Communications Devices: Measurement Techniques", December 2003
b) IEC 62209-1, "Procedure to measure the Specific Absorption Rate (SAR) for hand-held devices used in close proximity to the ear (frequency range of 300 MHz to 3 GHz)", February 2005

Methods Applied and Interpretation of Parameters:

- *NORMx,y,z:* Assessed for E-field polarization ϑ = 0 (f ≤ 900 MHz in TEM-cell; f > 1800 MHz: R22 waveguide). NORMx,y,z are only intermediate values, i.e., the uncertainties of NORMx,y,z does not effect the E^2-field uncertainty inside TSL (see below *ConvF*).
- *NORM(f)x,y,z = NORMx,y,z * frequency_response* (see Frequency Response Chart). This linearization is implemented in DASY4 software versions later than 4.2. The uncertainty of the frequency response is included in the stated uncertainty of *ConvF*.
- *DCPx,y,z:* DCP are numerical linearization parameters assessed based on the data of power sweep with CW signal (no uncertainty required). DCP does not depend on frequency nor media.
- *Ax,y,z; Bx,y,z; Cx,y,z, VRx,y,z: A, B, C* are numerical linearization parameters assessed based on the data of power sweep for specific modulation signal. The parameters do not depend on frequency nor media. *VR* is the maximum calibration range expressed in RMS voltage across the diode.
- *ConvF and Boundary Effect Parameters:* Assessed in flat phantom using E-field (or Temperature Transfer Standard for f ≤ 800 MHz) and inside waveguide using analytical field distributions based on power measurements for f > 800 MHz. The same setups are used for assessment of the parameters applied for boundary compensation (alpha, depth) of which typical uncertainty values are given. These parameters are used in DASY4 software to improve probe accuracy close to the boundary. The sensitivity in TSL corresponds to *NORMx,y,z * ConvF* whereby the uncertainty corresponds to that given for *ConvF*. A frequency dependent *ConvF* is used in DASY version 4.4 and higher which allows extending the validity from ± 50 MHz to ± 100 MHz.
- *Spherical isotropy (3D deviation from isotropy)*: in a field of low gradients realized using a flat phantom exposed by a patch antenna.
- *Sensor Offset*: The sensor offset corresponds to the offset of virtual measurement center from the probe tip (on probe axis). No tolerance required.

Probe EX3DV4

SN:3561

Manufactured:	February 14, 2005
Last calibrated:	August 26, 2008
Recalibrated:	August 19, 2010

Calibrated for DASY/EASY Systems

(Note: non-compatible with DASY2 system!)

DASY/EASY - Parameters of Probe: EX3DV4 SN:3561

Basic Calibration Parameters

	Sensor X	Sensor Y	Sensor Z	Unc (k=2)
Norm ($\mu V/(V/m)^2$)[A]	0.45	0.48	0.43	± 10.1%
DCP (mV)[B]	87.4	89.6	88.5	

Modulation Calibration Parameters

UID	Communication System Name	PAR		A dB	B dBuV	C	VR mV	Unc[E] (k=2)
10000	CW	0.00	X	0.00	0.00	1.00	300	± 1.5%
			Y	0.00	0.00	1.00	300	
			Z	0.00	0.00	1.00	300	

The reported uncertainty of measurement is stated as the standard uncertainty of measurement multiplied by the coverage factor k=2, which for a normal distribution corresponds to a coverage probability of approximately 95%.

[A] The uncertainties of NormX,Y,Z do not affect the $\vec{E}$-field uncertainty inside TSL (see Pages 5 and 6).

[B] Numerical linearization parameter: uncertainty not required.

[E] Uncertainty is determined using the maximum deviation from linear response applying recatangular distribution and is expressed for the square of the field value

DASY/EASY - Parameters of Probe: EX3DV4 SN:3561

Calibration Parameter Determined in Head Tissue Simulating Media

f [MHz]	Validity [MHz][c]	Permittivity	Conductivity	ConvF X	ConvF Y	ConvF Z	Alpha	Depth Unc (k=2)
750	± 50 / ± 100	41.9 ± 5%	0.89 ± 5%	8.36	8.36	8.36	0.76	0.64 ± 11.0%
835	± 50 / ± 100	41.5 ± 5%	0.90 ± 5%	7.96	7.96	7.96	0.75	0.64 ± 11.0%
1750	± 50 / ± 100	40.1 ± 5%	1.37 ± 5%	6.92	6.92	6.92	0.90	0.57 ± 11.0%
1900	± 50 / ± 100	40.0 ± 5%	1.40 ± 5%	6.69	6.69	6.69	0.76	0.63 ± 11.0%
2450	± 50 / ± 100	39.2 ± 5%	1.80 ± 5%	6.11	6.11	6.11	0.42	0.83 ± 11.0%
2600	± 50 / ± 100	39.0 ± 5%	1.96 ± 5%	6.09	6.09	6.09	0.36	0.93 ± 11.0%

[c] The validity of ± 100 MHz only applies for DASY v4.4 and higher (see Page 2). The uncertainty is the RSS of the ConvF uncertainty at calibration frequency and the uncertainty for the indicated frequency band.

DASY/EASY - Parameters of Probe: EX3DV4 SN:3561

Calibration Parameter Determined in Body Tissue Simulating Media

f [MHz]	Validity [MHz][C]	Permittivity	Conductivity	ConvF X	ConvF Y	ConvF Z	Alpha	Depth Unc (k=2)
835	± 50 / ± 100	55.2 ± 5%	0.97 ± 5%	8.09	8.09	8.09	0.74	0.65 ± 11.0%
1750	± 50 / ± 100	53.4 ± 5%	1.49 ± 5%	6.84	6.84	6.84	0.43	0.82 ± 11.0%
1900	± 50 / ± 100	53.3 ± 5%	1.52 ± 5%	6.59	6.59	6.59	0.56	0.71 ± 11.0%
2450	± 50 / ± 100	52.7 ± 5%	1.95 ± 5%	6.44	6.44	6.44	0.37	0.87 ± 11.0%
2600	± 50 / ± 100	52.5 ± 5%	2.16 ± 5%	6.45	6.45	6.45	0.37	0.95 ± 11.0%
4950	± 50 / ± 100	49.4 ± 5%	5.01 ± 5%	3.80	3.80	3.80	0.53	1.90 ± 13.1%
5200	± 50 / ± 100	49.0 ± 5%	5.30 ± 5%	3.67	3.67	3.67	0.60	1.95 ± 13.1%
5300	± 50 / ± 100	48.5 ± 5%	5.42 ± 5%	3.42	3.42	3.42	0.63	1.95 ± 13.1%
5500	± 50 / ± 100	48.6 ± 5%	5.65 ± 5%	3.31	3.31	3.31	0.63	1.95 ± 13.1%
5600	± 50 / ± 100	48.5 ± 5%	5.77 ± 5%	3.12	3.12	3.12	0.65	1.95 ± 13.1%
5800	± 50 / ± 100	48.2 ± 5%	6.00 ± 5%	3.25	3.25	3.25	0.65	1.95 ± 13.1%

[C] The validity of ± 100 MHz only applies for DASY v4.4 and higher (see Page 2). The uncertainty is the RSS of the ConvF uncertainty at calibration frequency and the uncertainty for the indicated frequency band.

Frequency Response of E-Field

(TEM-Cell:ifi110 EXX, Waveguide: R22)

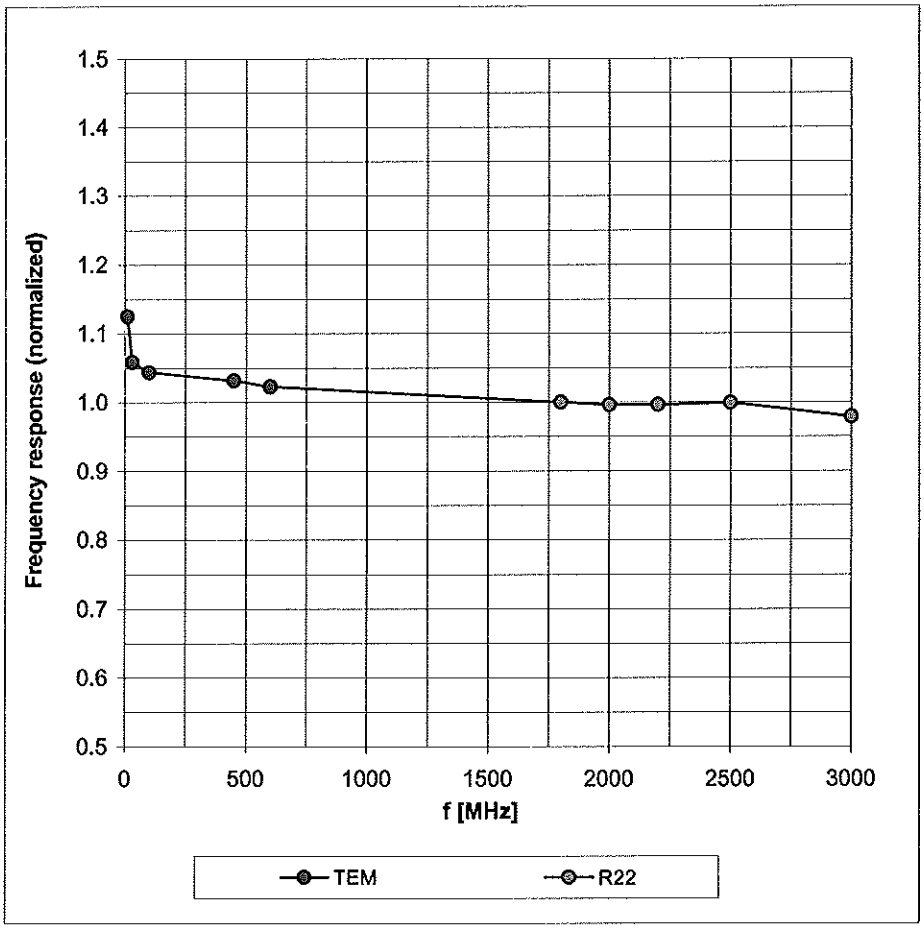

Uncertainty of Frequency Response of E-field: ± 6.3% (k=2)

Receiving Pattern (ϕ), ϑ = 0°

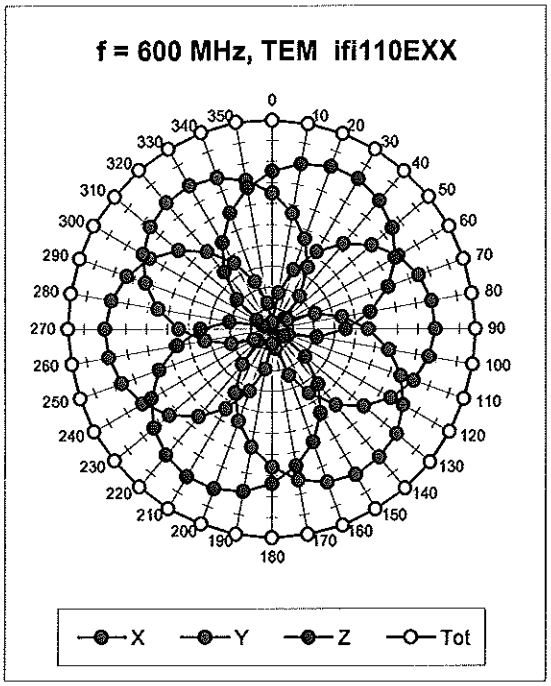

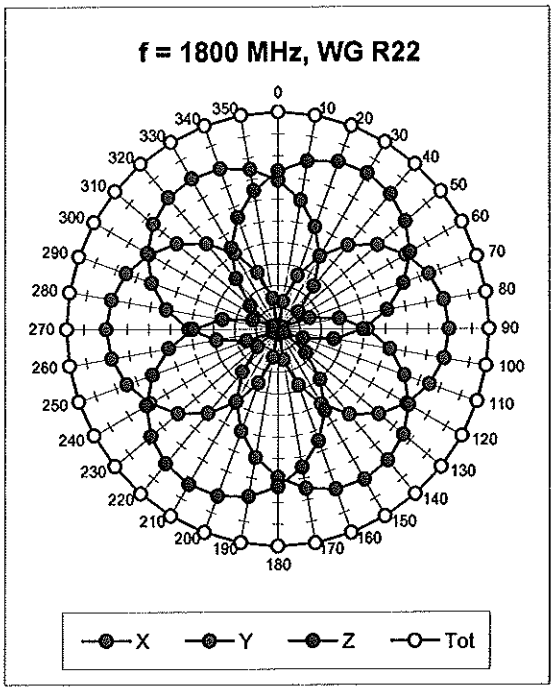

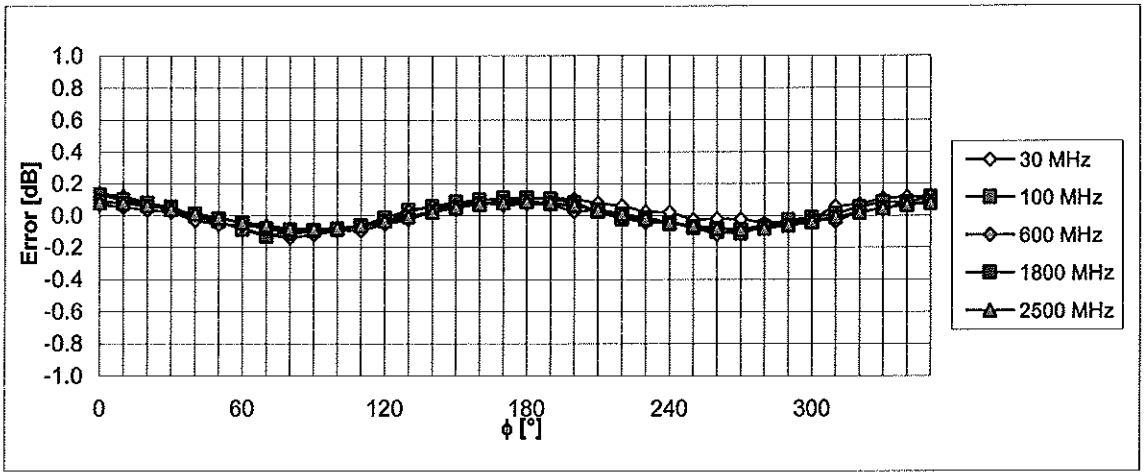

Uncertainty of Axial Isotropy Assessment: ± 0.5% (k=2)

Dynamic Range f(SAR_{head})

(Waveguide R22, f = 1800 MHz)

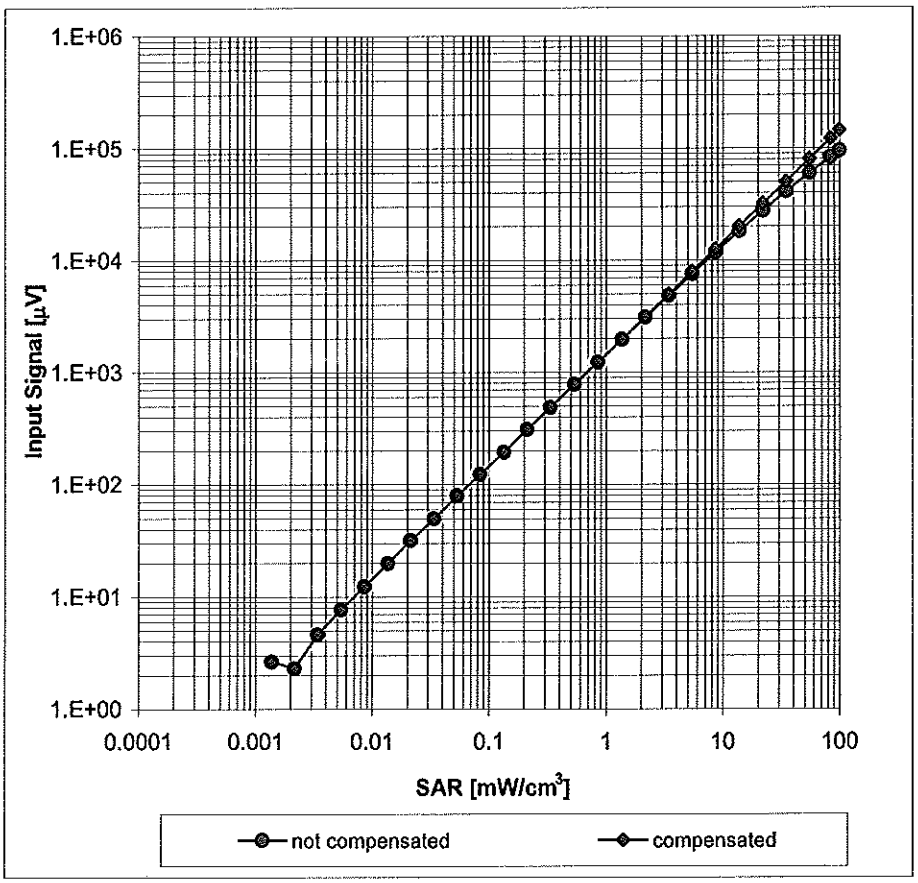

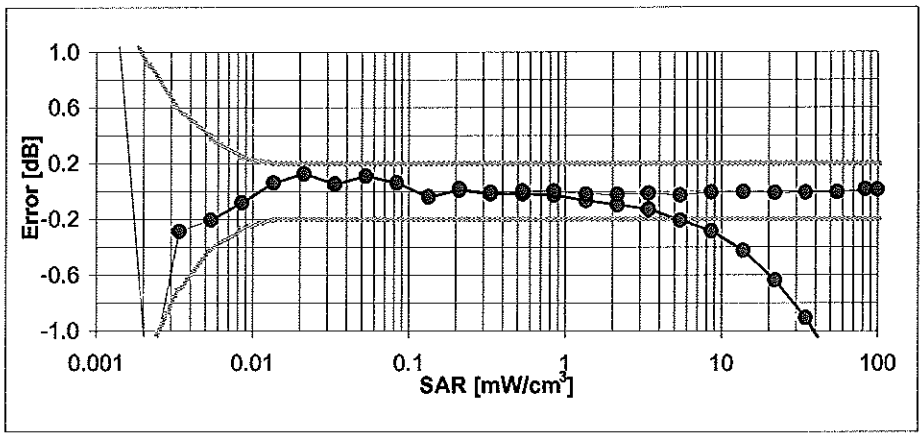

Uncertainty of Linearity Assessment: ± 0.6% (k=2)

Conversion Factor Assessment

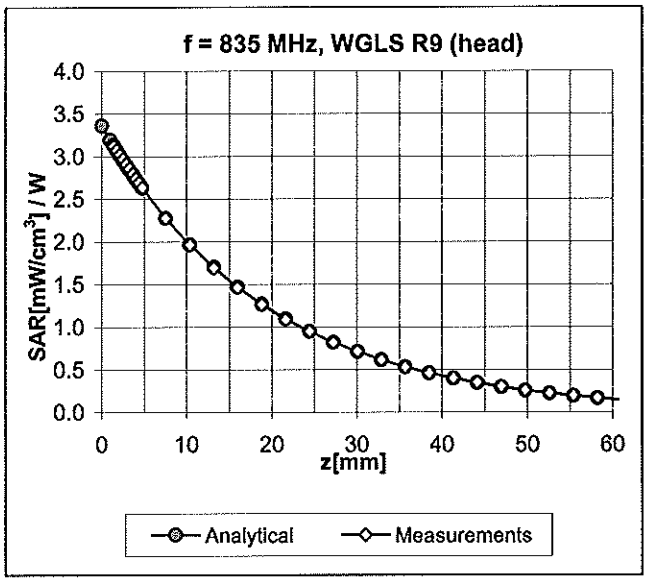

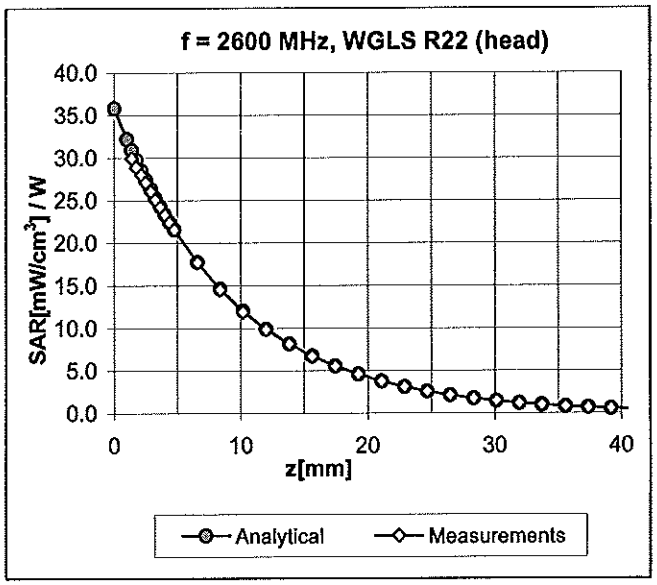

Deviation from Isotropy in HSL

Error (ϕ, ϑ), f = 900 MHz

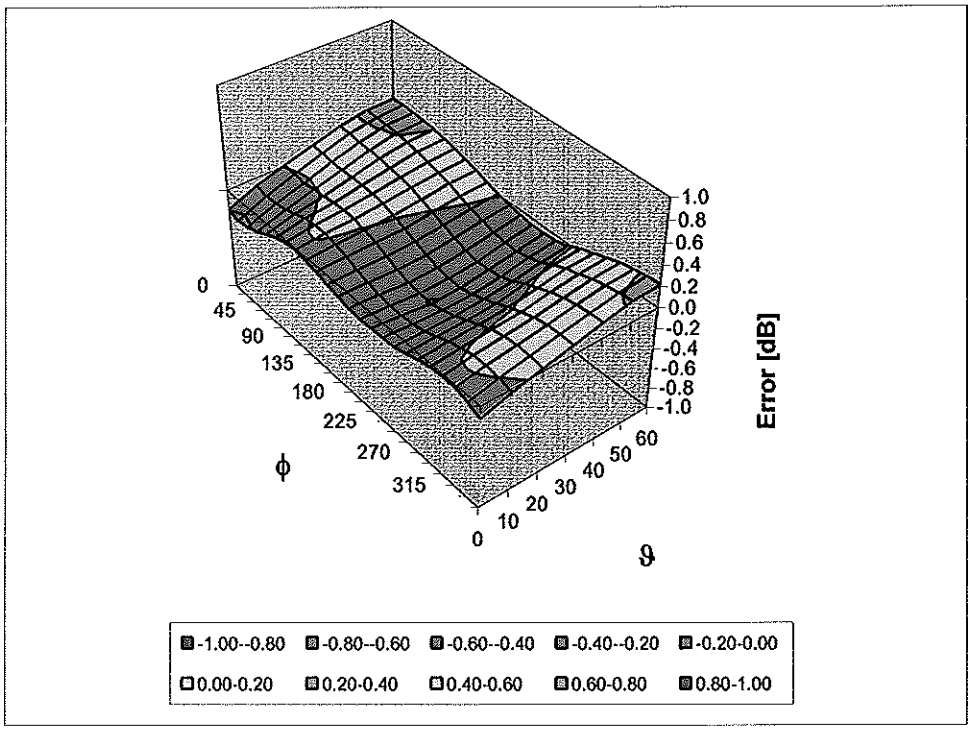

Uncertainty of Spherical Isotropy Assessment: ± 2.6% (k=2)

Other Probe Parameters

Sensor Arrangement	Triangular
Connector Angle (°)	Not applicable
Mechanical Surface Detection Mode	enabled
Optical Surface Detection Mode	disabled
Probe Overall Length	337 mm
Probe Body Diameter	10 mm
Tip Length	9 mm
Tip Diameter	2.5 mm
Probe Tip to Sensor X Calibration Point	1 mm
Probe Tip to Sensor Y Calibration Point	1 mm
Probe Tip to Sensor Z Calibration Point	1 mm
Recommended Measurement Distance from Surface	2 mm

Calibration Laboratory of
Schmid & Partner
Engineering AG
Zeughausstrasse 43, 8004 Zurich, Switzerland

S Schweizerischer Kalibrierdienst
C Service suisse d'étalonnage
Servizio svizzero di taratura
S Swiss Calibration Service

Accredited by the Swiss Accreditation Service (SAS)
The Swiss Accreditation Service is one of the signatories to the EA Multilateral Agreement for the recognition of calibration certificates

Accreditation No.: SCS 108

Client PC Test

Certificate No: ES3-3022_Sep09

CALIBRATION CERTIFICATE

Object	ES3DV2 - SN:3022
Calibration procedure(s)	QA CAL-01.v6, QA CAL-23.v3 and QA CAL-25.v2 Calibration procedure for dosimetric E-field probes
Calibration date:	September 18, 2009
Condition of the calibrated item	In Tolerance

This calibration certificate documents the traceability to national standards, which realize the physical units of measurements (SI).
The measurements and the uncertainties with confidence probability are given on the following pages and are part of the certificate.

All calibrations have been conducted in the closed laboratory facility: environment temperature (22 ± 3)°C and humidity < 70%.

Calibration Equipment used (M&TE critical for calibration)

Primary Standards	ID #	Cal Date (Certificate No.)	Scheduled Calibration
Power meter E4419B	GB41293874	1-Apr-09 (No. 217-01030)	Apr-10
Power sensor E4412A	MY41495277	1-Apr-09 (No. 217-01030)	Apr-10
Power sensor E4412A	MY41498087	1-Apr-09 (No. 217-01030)	Apr-10
Reference 3 dB Attenuator	SN: S5054 (3c)	31-Mar-09 (No. 217-01026)	Mar-10
Reference 20 dB Attenuator	SN: S5086 (20b)	31-Mar-09 (No. 217-01028)	Mar-10
Reference 30 dB Attenuator	SN: S5129 (30b)	31-Mar-09 (No. 217-01027)	Mar-10
Reference Probe ES3DV2	SN: 3013	2-Jan-09 (No. ES3-3013_Jan09)	Jan-10
DAE4	SN: 660	9-Sep-08 (No. DAE4-660_Sep08)	Sep-09

Secondary Standards	ID #	Check Date (in house)	Scheduled Check
RF generator HP 8648C	US3642U01700	4-Aug-99 (in house check Oct-07)	In house check: Oct-09
Network Analyzer HP 8753E	US37390585	18-Oct-01 (in house check Oct-08)	In house check: Oct-09

	Name	Function	Signature
Calibrated by:	Jeton Kastrati	Laboratory Technician	
Approved by:	Katja Pokovic	Technical Manager	

Issued: September 21, 2009

This calibration certificate shall not be reproduced except in full without written approval of the laboratory.

Glossary:

TSL	tissue simulating liquid
NORMx,y,z	sensitivity in free space
ConvF	sensitivity in TSL / NORMx,y,z
DCP	diode compression point
Polarization φ	φ rotation around probe axis
Polarization ϑ	ϑ rotation around an axis that is in the plane normal to probe axis (at measurement center), i.e., ϑ = 0 is normal to probe axis

Calibration is Performed According to the Following Standards:

a) IEEE Std 1528-2003, "IEEE Recommended Practice for Determining the Peak Spatial-Averaged Specific Absorption Rate (SAR) in the Human Head from Wireless Communications Devices: Measurement Techniques", December 2003
b) IEC 62209-1, "Procedure to measure the Specific Absorption Rate (SAR) for hand-held devices used in close proximity to the ear (frequency range of 300 MHz to 3 GHz)", February 2005

Methods Applied and Interpretation of Parameters:

- *NORMx,y,z:* Assessed for E-field polarization ϑ = 0 (f ≤ 900 MHz in TEM-cell; f > 1800 MHz: R22 waveguide). NORMx,y,z are only intermediate values, i.e., the uncertainties of NORMx,y,z does not effect the E^2-field uncertainty inside TSL (see below *ConvF*).
- *NORM(f)x,y,z = NORMx,y,z * frequency_response* (see Frequency Response Chart). This linearization is implemented in DASY4 software versions later than 4.2. The uncertainty of the frequency response is included in the stated uncertainty of *ConvF*.
- *DCPx,y,z:* DCP are numerical linearization parameters assessed based on the data of power sweep (no uncertainty required). DCP does not depend on frequency nor media.
- *ConvF and Boundary Effect Parameters:* Assessed in flat phantom using E-field (or Temperature Transfer Standard for f ≤ 800 MHz) and inside waveguide using analytical field distributions based on power measurements for f > 800 MHz. The same setups are used for assessment of the parameters applied for boundary compensation (alpha, depth) of which typical uncertainty values are given. These parameters are used in DASY4 software to improve probe accuracy close to the boundary. The sensitivity in TSL corresponds to *NORMx,y,z * ConvF* whereby the uncertainty corresponds to that given for *ConvF*. A frequency dependent *ConvF* is used in DASY version 4.4 and higher which allows extending the validity from ± 50 MHz to ± 100 MHz.
- *Spherical isotropy (3D deviation from isotropy)*: in a field of low gradients realized using a flat phantom exposed by a patch antenna.
- *Sensor Offset*: The sensor offset corresponds to the offset of virtual measurement center from the probe tip (on probe axis). No tolerance required.

Probe ES3DV2

SN:3022

Manufactured:	April 15, 2003
Last calibrated:	October 21, 2008
Recalibrated:	September 18, 2009

Calibrated for DASY Systems

(Note: non-compatible with DASY2 system!)

DASY - Parameters of Probe: ES3DV2 SN:3022

Sensitivity in Free Space[A]

NormX	**1.01** ± 10.1%	$\mu V/(V/m)^2$	DCP X	**92** mV
NormY	**1.05** ± 10.1%	$\mu V/(V/m)^2$	DCP Y	**92** mV
NormZ	**1.01** ± 10.1%	$\mu V/(V/m)^2$	DCP Z	**92** mV

Diode Compression[B]

Sensitivity in Tissue Simulating Liquid (Conversion Factors)

Please see Page 8.

Boundary Effect

TSL **835 MHz** **Typical SAR gradient: 5 % per mm**

Sensor Center to Phantom Surface Distance		**3.0 mm**	**4.0 mm**
SAR_{be} [%]	Without Correction Algorithm	8.8	5.3
SAR_{be} [%]	With Correction Algorithm	0.9	0.6

TSL **1750 MHz** **Typical SAR gradient: 10 % per mm**

Sensor Center to Phantom Surface Distance		**3.0 mm**	**4.0 mm**
SAR_{be} [%]	Without Correction Algorithm	8.7	5.7
SAR_{be} [%]	With Correction Algorithm	0.6	0.3

Sensor Offset

Probe Tip to Sensor Center **2.0** mm

The reported uncertainty of measurement is stated as the standard uncertainty of measurement multiplied by the coverage factor k=2, which for a normal distribution corresponds to a coverage probability of approximately 95%.

[A] The uncertainties of NormX,Y,Z do not affect the E^2-field uncertainty inside TSL (see Page 8).

[B] Numerical linearization parameter: uncertainty not required.

Frequency Response of E-Field

(TEM-Cell:ifi110 EXX, Waveguide: R22)

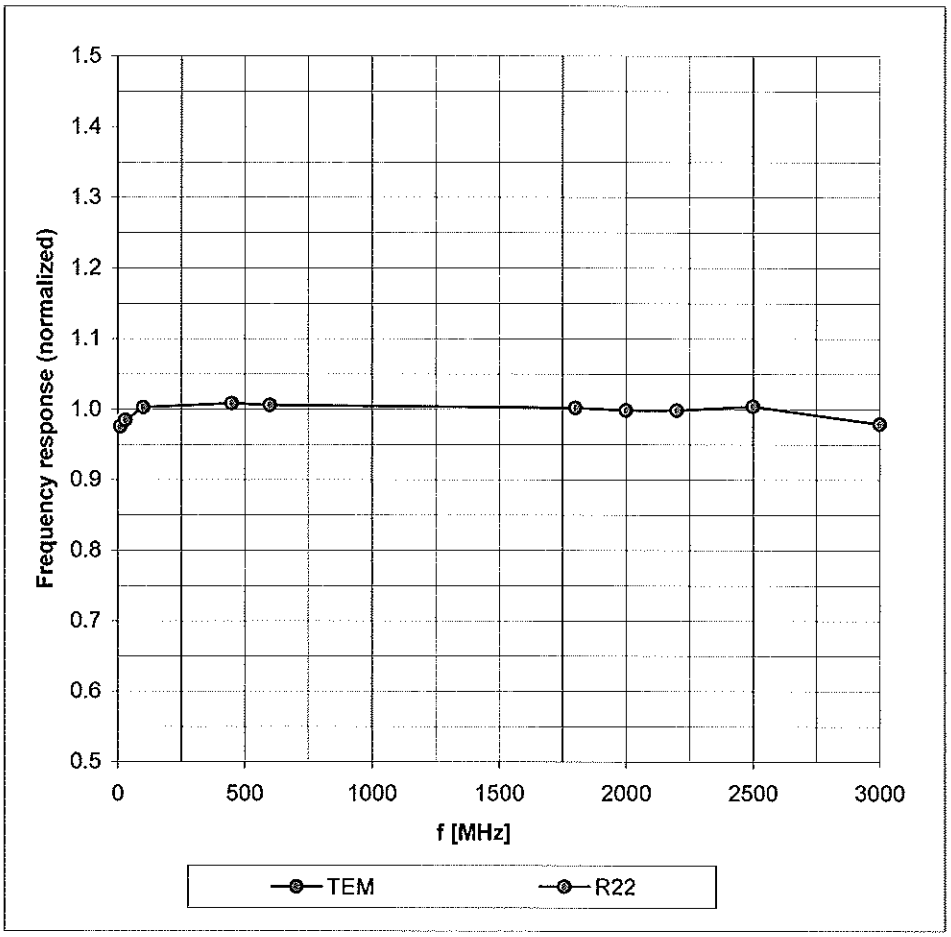

Uncertainty of Frequency Response of E-field: ± 6.3% (k=2)

Receiving Pattern (ϕ), ϑ = 0°

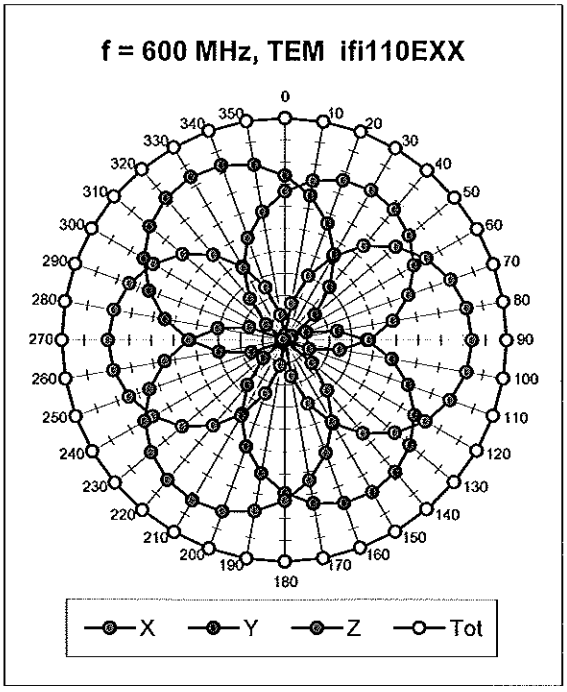

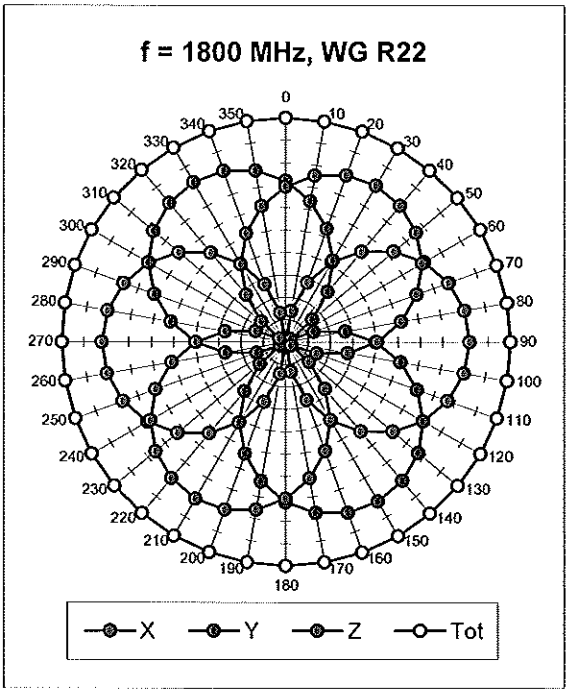

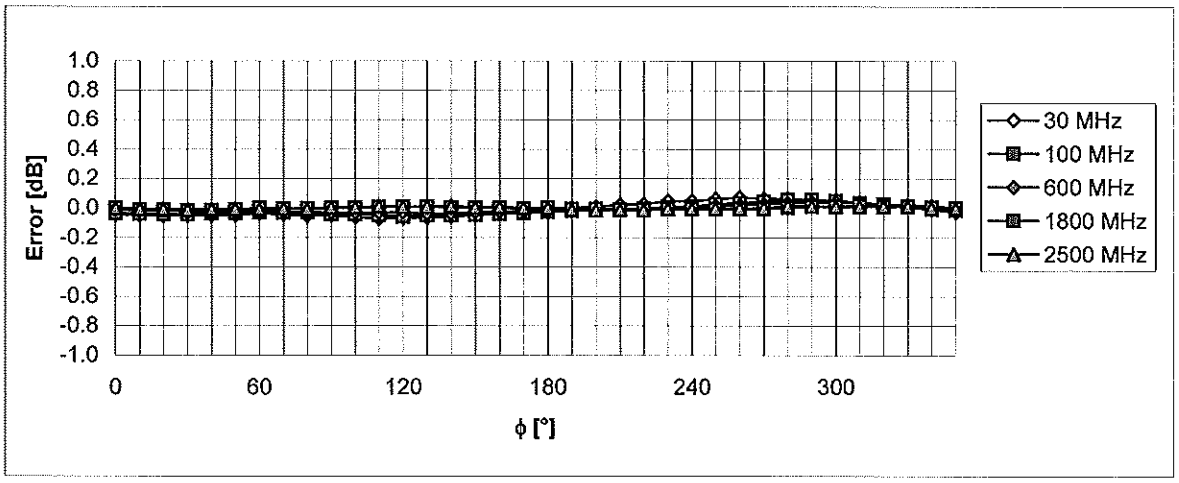

Uncertainty of Axial Isotropy Assessment: ± 0.5% (k=2)

Dynamic Range f(SAR_{head})

(Waveguide R22, f = 1800 MHz)

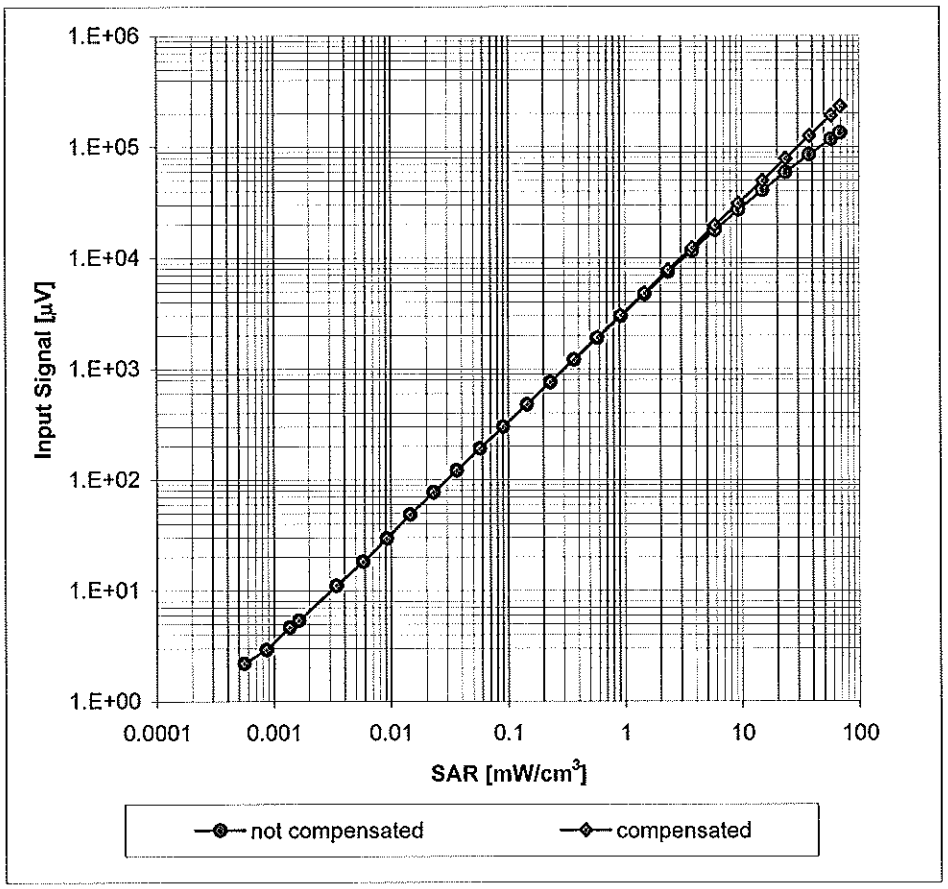

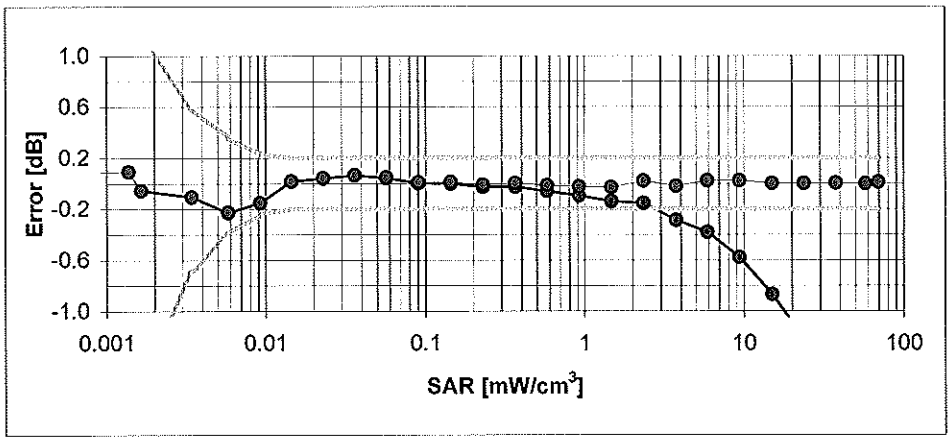

Uncertainty of Linearity Assessment: ± 0.6% (k=2)

Conversion Factor Assessment

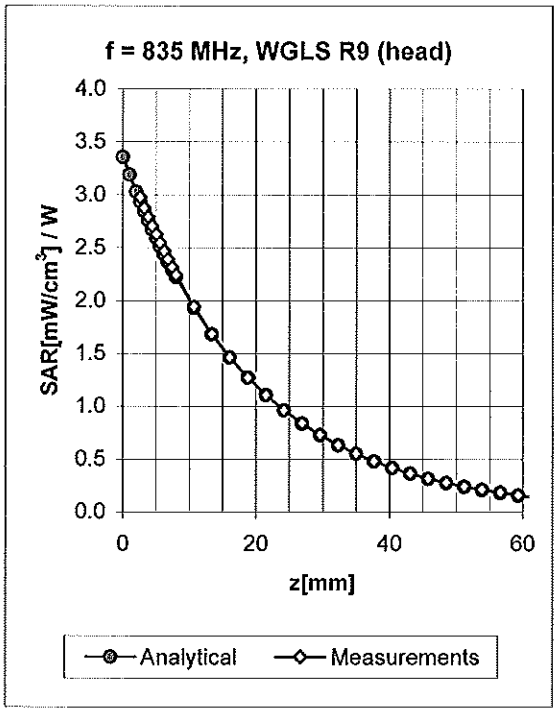

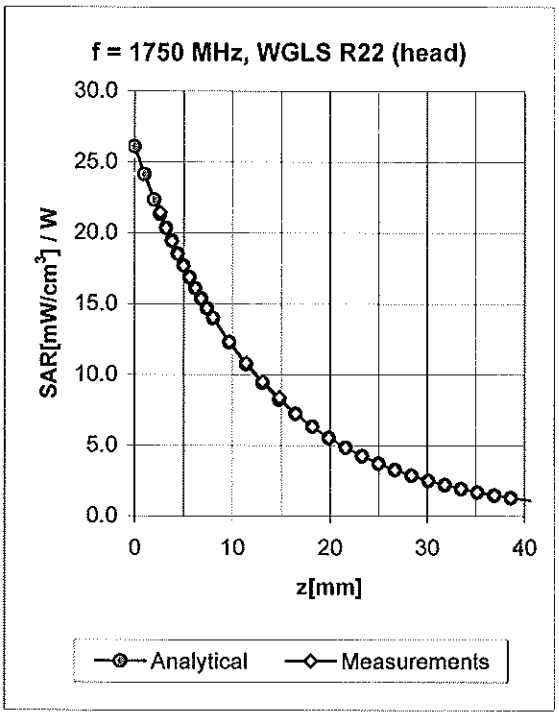

f [MHz]	Validity [MHz][C]	TSL	Permittivity	Conductivity	Alpha	Depth	ConvF Uncertainty
835	± 50 / ± 100	Head	41.5 ± 5%	0.90 ± 5%	0.60	1.19	6.04 ± 11.0% (k=2)
1750	± 50 / ± 100	Head	40.1 ± 5%	1.37 ± 5%	0.32	1.84	5.11 ± 11.0% (k=2)
1900	± 50 / ± 100	Head	40.0 ± 5%	1.40 ± 5%	0.39	1.67	4.86 ± 11.0% (k=2)
2450	± 50 / ± 100	Head	39.2 ± 5%	1.80 ± 5%	0.33	1.91	4.25 ± 11.0% (k=2)
750	± 50 / ± 100	Body	55.5 ± 5%	0.96 ± 5%	0.63	1.20	5.83 ± 11.0% (k=2)
835	± 50 / ± 100	Body	55.2 ± 5%	0.97 ± 5%	0.51	1.35	5.85 ± 11.0% (k=2)
1640	± 50 / ± 100	Body	53.8 ± 5%	1.40 ± 5%	0.27	2.64	4.93 ± 11.0% (k=2)
1750	± 50 / ± 100	Body	53.4 ± 5%	1.49 ± 5%	0.28	2.76	4.66 ± 11.0% (k=2)
1900	± 50 / ± 100	Body	53.3 ± 5%	1.52 ± 5%	0.26	3.47	4.42 ± 11.0% (k=2)
2450	± 50 / ± 100	Body	52.7 ± 5%	1.95 ± 5%	0.48	1.45	4.05 ± 11.0% (k=2)
2600	± 50 / ± 100	Body	52.5 ± 5%	2.16 ± 5%	0.68	1.21	3.95 ± 11.0% (k=2)

[C] The validity of ± 100 MHz only applies for DASY v4.4 and higher (see Page 2). The uncertainty is the RSS of the ConvF uncertainty at calibration frequency and the uncertainty for the indicated frequency band.

Deviation from Isotropy in HSL

Error (ϕ, ϑ), f = 900 MHz

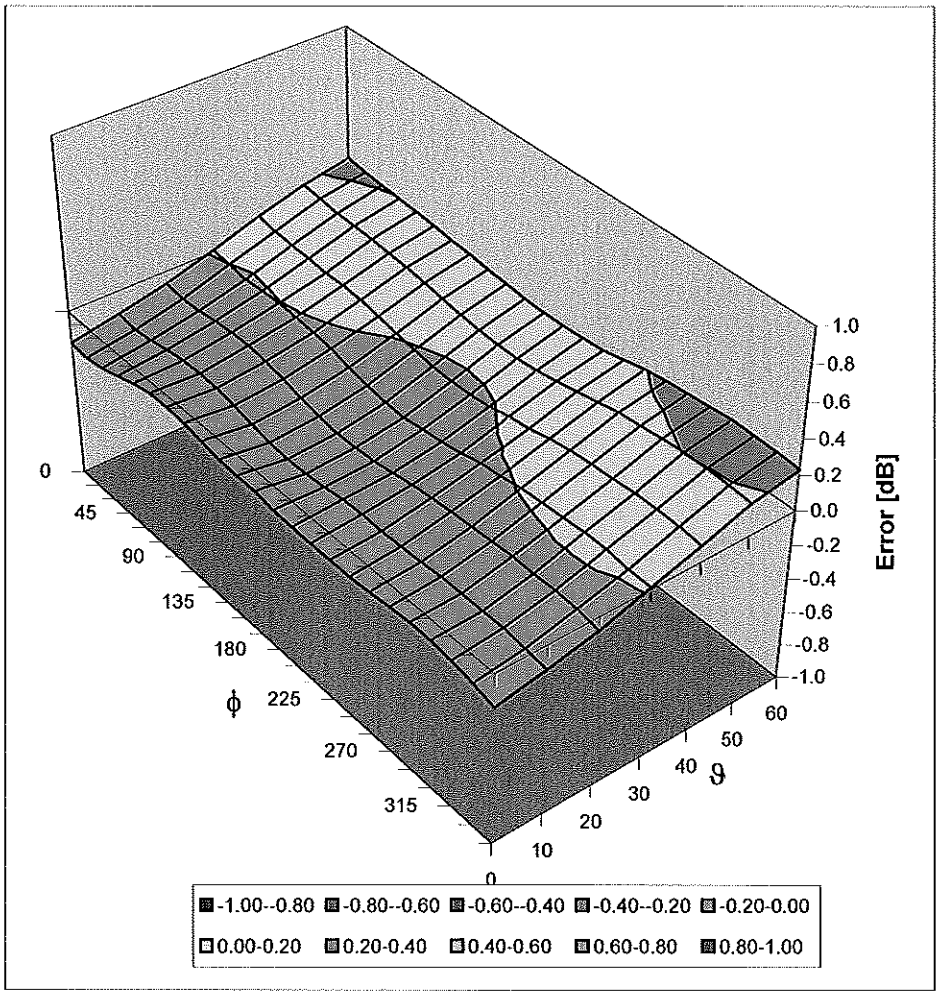

Uncertainty of Spherical Isotropy Assessment: ± 2.6% (k=2)