Samsung Electronics of America, Inc.
Service Division
400 Valley Road, Suite 201
Mount Arlington, NJ 07856
TEL: 1-800-SAMSUNG (1-800-726-7864)
www.samsungusa.com

BP68-00142A-00

DLPTV DLPTV

INSTRUCTION MANUAL

HLN467W//HLN567W/HLN4365W/HLN5065W/HLN437W
HLN507W/HLN617W

Warning! Important Safety Instructions

CAUTION

RISK OF ELECTRIC SHOCK
DO NOT OPEN

CAUTION: TO REDUCE THE RISK OF ELECTRIC SHOCK, DO NOT REMOVE COVER (OR BACK). THERE ARE NO USER SERVICEABLE PARTS INSIDE. REFER ALL SERVICING TO QUALIFIED SERVICE PERSONNEL.

This symbol indicates high voltage is present. It is dangerous to make any kind of contact with any part inside this product.

This symbol alerts you that important literature concerning operation and maintenance has been included with this product.

CAUTION: FCC/CSA regulations state that any unauthorized changes or modifications to this equipment may void the user's authority to operate it.

CAUTION: To prevent electric shock, match the wide blade of plug to the wide slot, and fully insert the plug.

ATTENTION: Pour eviter les chocs electriques, introduire la lame le plus large de la fiche dans la borne correspondante de la prise et pousser jusqu'au fond.

Note to CATV system installer: This reminder is provided to call CATV system installer's attention to Article 820-40 of the National Electrical Code (Section 54 of Canadian Electrical Code, Part I), that provides guidelines for proper grounding and, in particular, specifies that the cable ground shall be connected to the grounding system of the building as close to the point of cable entry as possible.

Important: One Federal Court has held that unauthorized recording of copyrighted TV programs is an infringement of U.S. copyright laws. Certain Canadian programs may also be copyrighted and any unauthorized recording in whole or in part may be in violation of these laws.

To prevent damage which may result in fire or electric shock, do not expose this appliance to rain or moisture.

Thank You for Choosing Samsung

Thank you for choosing Samsung! Your new Samsung projection TV represents the latest in television technology. We designed it with easy-to-use on-screen menus and closed captioning capabilities, making it one of the best products in its class. We are proud to offer you a product that will provide convenient, dependable service and enjoyment for years to come.

Important Safety Information

Always be careful when using your TV. To reduce the risk of fire, electrical shock, and other injuries, keep these safety precautions in mind when installing, using, and maintaining your unit.

- Read all safety and operating instructions before operating your TV.
- Keep the safety and operating instructions for future reference.
- Heed all warnings on the TV and in the operating instructions.
- Unplug the TV from the wall outlet before cleaning. Use a damp cloth; do not use liquid or aerosol cleaners.
- Never add any attachments and/or equipment without approval of the manufacturer. Such additions can increase the risk of fire, electric shock, or other personal injury.
- Do not use the TV where contact with water is possible, such as near bath tubs, sinks, washing machines, swimming pools, etc.
- Do not place the TV on an unstable cart, stand, tripod, bracket, or table where it can fall. A falling TV can cause serious injury to a child or adult, and serious damage to the appliance. Use only with a cart, stand, tripod, bracket, or table recommended by the manufacturer or sold with the TV. Follow the manufacturer's instructions when mounting the unit, and use a mounting accessory recommended by the manufacturer. Move the TV and cart with care. Quick stops, excessive force, and uneven surfaces can make the unit and cart unsteady and more likely to overturn.

- The TV is designed with slots in the cabinet for ventilation to protect it from overheating. Do not block these openings with any object, and do not put the TV on a bed, sofa, rug, or other similar surface. Do not put the TV near a radiator or heat register. If you do put the TV on a rack or bookcase, make sure that there is adequate ventilation and that you've followed the manufacturer's instructions for mounting.
- Operate your TV only from the type of power source indicated on the marking label. If you are not sure of the type of power supplied to your home, consult your appliance dealer or local power company.
- Use only a grounded or polarized outlet. For your safety, this TV is equipped with a polarized alternating current line plug having one blade wider than the other. This plug will fit into the power outlet only one way. If you are unable to insert the plug fully into the outlet, try reversing the plug. If the plug still does not fit, contact an electrician to replace your outlet.

Safety Instructions

- Protect the power cord. Power supply cords should be routed so that they won't be walked on or pinched by objects placed on or against them. Pay particular attention to cords at plugs, convenience receptacles, and the point where they exit from the unit.

- Unplug the TV from the wall outlet and disconnect the antenna or cable system during a lightning storm or when left unattended and unused for long periods of time. This will prevent damage to the unit from lightning and power-line surges.

- Avoid overhead power lines. An outside antenna system should not be placed in the vicinity of overhead power lines or other electric light or power circuits, or where it can fall into such power lines or circuits. When installing an outside antenna system, be extremely careful to keep from touching the power lines or circuits. Contact with such lines can be fatal.

- Do not overload the wall outlet or extension cords. Overloading can result in fire or electric shock.

- Do not insert anything through the openings in the unit, where they can touch dangerous voltage points or damage parts. Never spill liquid of any kind on the TV.

- Ground outdoor antennas. If an outside antenna or cable system is connected to the TV, be sure the antenna or cable system is grounded so as to provide some protection against voltage surges and built-up static charges. Section 810 of the National Electrical Code, ANSI/NFPA No.70-1984, provides information about proper grounding of the mast and supporting structure, grounding of the lead-in wire to an antenna discharge unit, size of grounding conductors, location of antenna discharge unit, connection to grounding electrodes, and requirements for the grounding electrode.

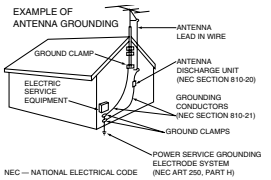

- Do not attempt to service the TV yourself. Refer all servicing to qualified service personnel. Unplug the unit from the wall outlet and refer servicing to qualified service personnel when:
  - The power-supply cord or plug is damaged
  - Liquid has been spilled on the unit or if objects have fallen into the unit
  - The TV has been exposed to rain or water
  - The TV does not operate normally by following the operating instructions
  - The TV has been dropped or the cabinet has been damaged
  - The TV exhibits a distinct degradation in performance
  - When the LAMP(BULB ONLY) replacement is needed

- If you make adjustments yourself, adjust only those controls that are covered by the operating instructions. Adjusting other controls may result in damage and will often require extensive work by a qualified technician to restore the TV to normal.

- When replacement parts are required, be sure the service technician uses replacement parts specified by the manufacturer or those that have the same characteristics as the original part. Unauthorized substitutions may result in additional damage to the unit.

- Upon completion of any service or repairs to this TV, ask the service technician to perform safety checks to determine that the TV is in a safe operating condition.

This device complies with part 15 of the FCC Rules. Operation is subject to the following two conditions:
(1) This device may not cause harmful interference, and
(2) This device must accept any interference that may cause undesired operation.

This television receiver provides display of television closed captioning in accordance with §15.119 of the FCC rules.

SAMSUNG

FCC Information

User Instructions
The Federal Communications Commission Radio Frequency Interference Statement includes the following warning:
NOTE: This equipment has been tested and found to comply with the limits for a Class B digital device, pursuant to Part 15 of the FCC Rules. These limits are designed to provide reasonable protection against harmful interference in a residential installation. This equipment generates, uses, and can radiate radio frequency energy and, if not installed and used in accordance with the instructions, may cause harmful interference to radio communications. However, there is no guarantee that interference will not occur in a particular installation.

If this equipment does cause harmful interference to radio or television receptions, which can be determined by turning the equipment off and on, the user is encouraged to try to correct the interference by one or more of the following measures:
- Reorient or relocate the receiving antenna.
- Increase the separation between the equipment and receiver.
- Connect the equipment into an outlet on a circuit different from that to which the receiver is connected.
- Consult the dealer or an experienced radio/TV technician for help.

User Information
Changes or modifications not expressly approved by the party responsible for compliance could void the user's authority to operate the equipment. If necessary, consult your dealer or an experienced
radio/television technician for additional suggestions. You may find the booklet called How to Identify and Resolve Radio/TV Interference Problems helpful. This booklet was prepared by the Federal Communications Commission. It is available from the U.S. Government Printing Office, Washington, DC 20402, Stock Number 004-000-00345-4.

Warning
User must use shielded signal interface cables to maintain FCC compliance for the product.
Declaration of conformity for products marked with FCC Logo. This device complies with Part 15 of the FCC Rules.
Operation is subject to the following two conditions:
(1) this device may not cause harmful interference, and
(2) this device must accept any interference received, including interference that may cause undesired operation.
The party responsible for product compliance:
SAMSUNG ELECTRONICS CO., LTD
America QA Lab of Samsung
85 West Tasman Drive
San Jose, CA 95134 USA
Tel) 408-544-5124
Fax) 408-544-5191
Provided with this monitor is a detachable power supply cord with IEC320 style terminations. It may be suitable for connection to any UL Listed personal computer with similar configuration. Before making the connection, make sure the voltage rating of the computer convenience outlet is the same as the monitor and that the ampere rating of the computer convenience outlet is equal to or exceeds the monitor voltage rating.
For 120 Volt applications, use only UL Listed detachable power cord with NEMA configuration 5-15P type (parallel blades) plug cap. For 240 Volt applications use only UL Listed Detachable power supply cord with NEMA configuration 6015P type (tandem blades) plug cap.

IC Compliance Notice
This Class B digital apparatus meets all requirements of the Canadian Interference-Causing Equipment Regulations of ICES-003.

Notice de Conformité IC
Cet appareil numérique de classe B respecte toutes les exigences du Règlement ICES-003 sur les équipements produisant des interférences au Canada.

Table of Contents

Your New Wide TV 10
- Replacing the Lamp 10
- List of Features 12
- Checking Parts 12
- Side Panel Buttons 13
- Side Panel Jacks 13
- Front Panel LED Indicators 14
- Rear Panel Jacks 15
- Remote Control 16
  - Installing Batteries in the Remote Control 17

Connections 20
- Connecting VHF and UHF Antennas 20
  - Antennas with 300-ohm Flat Twin Leads 20
  - Antennas with 75-ohm Round Leads 20
  - Separate VHF and UHF Antennas 21
- Connecting Cable TV and VCR 22
  - Cable without a Cable Box 22
  - Cable with a Cable Box that Descrambles All Channels 22
  - Connecting a Cable Converter Box 23
  - Connecting a Cable Converter Box and a VCR 23
- Connecting a Camcorder 24
- Connecting a DVD Player 25
- Connecting a DTV Set Top Box 26

Operation 30
- Turning the TV On and Off 30
- Viewing the Menus and Displays 30
- Selecting the Menu Language 31
- Selecting the Antenna Input 31
- Channel Memory 33
- Changing Channels 34
- Selecting Your Favorite Channels 35
- Labeling the Channels 36
- Setting The On/Off Melody 36
- Picture Control 38
- Sound Control 40
- Setting the Clock 42
- Setting the Timers 43
- Viewing an External Signal Source 45

Special Features 48
- Setting Up Your Remote Control 48
- Remote Control Codes 51
- Fine Tuning Channels 52
- Selecting the Color Tone 53
- Setting the Film Mode 53
- DNIe™ (Digital Natural Image engine) DNIe™ 54
- Digital Noise Reduction 55
- Setting the Blue Screen Mode 56
- Changing the Screen Size 57
- Special Audio Options 59
  - MTS Settings: Choosing a Soundtrack 59
  - Dolby Virtual 60
  - BBE 61
  - Auto Volume 62
- Viewing Closed Caption Information 63
- Viewing Picture-in-Picture 64
  - Selecting a Screen 64
  - Selecting an External Signal 65
  - Selecting a Signal Source (Antenna or Cable) for PIP 66
  - Swapping the Contents of the PIP and Main image 67
  - Changing the Size of the PIP image 68
  - Changing the Picture-in-Picture Channel 69
  - Selecting the Sound Source 70
  - Changing the Location of the PIP image 70
- Using the V-Chip 71

PC Display 78
- Using Your TV as a Computer (PC) Display 78
  - How to connect Your PC to the TV 78
  - How to Set up Your PC Software (Windows only) 79
  - Display Modes 80
- How to Set up Your TV as a PC display 81
- Picture Quality Adjustment 82
- Changing the Position of the Image (Moving left, right, up and down) 83
- Changing the Screen Size (PC mode) 84

Appendix 88
- Troubleshooting 88
- Care and Maintenance 89
- Using Your TV in Another Country 89
- Specifications 89

SAMSUNG

Your New Wide TV

Replacing the Lamp

- A Projection TV lamp is a consumable item, and should be replaced from time to time for best projector operation. If the screen image becomes dark, or timer, lamp and Temp LEDs flicker off at the same time, you may have to replace the lamp.
- When changing the lamp, you should first verify the type/model, and then use only the correct lamp replacement. The code for lamp regulation and usage is marked on the label. If you remove the lamp, you can identify this replacement code. You should only replace the lamp with the one of the same regulation code.
- If you wish to buy a new lamp, please phone your Service Center or a nearby TV dealer, and tell them the model of your projection unit.
- You can identify the lamp type on the left side of TV and the lamp cover.
- The TV will be damaged if you use a lamp that is different from the original supplied by the manufacturer.
- Please don't remove the lamp except when replacing with a new one.
- Please turn off TV power before changing a lamp and then unplug after waiting 1 minute.
- The cooling fan will help cool the lamp so you can safely remove it. The surface of the Lamp is very hot. Please wait for 30 minutes after turning off your projection TV to handle the lamp.
- Please keep the old lamp away from flammable articles and children. Dispose of properly.
- Don't allow dirt or dust to accumulate inside the lamp cover or on the Lamp.
- A dirty cover or lamp can catch fire, explode and cause electric shock.
- Please don't touch the front glass of a new lamp or the glass of the lamp container.
- If a new lamp is improperly handled, the quality of the screen image can be affected and the expected life span of the lamp can be reduced.
- Be sure to tighten the lamp cover on the TV after changing the lamp. Note that the TV will not function if the lamp cover is not securely attached. Please tighten the holding screw on the lamp cover after it has been attached to the TV.

1 Use a screwdriver to remove the screw as shown in the picture.

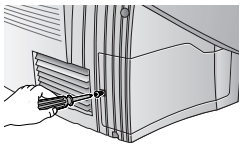

2 Remove the Lamp cover.

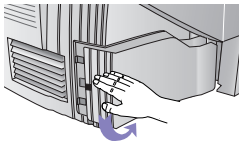

3 Use a screwdriver to remove the screws securing the Lamp. There are 2 screws: one on the left and one on the right. When the screws have been completely unfastened, they will still be connected to the body of the Lamp.

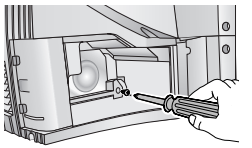

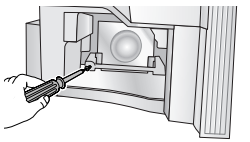

4 Separate the Lamp from the engine by holding the handle and pulling it out.

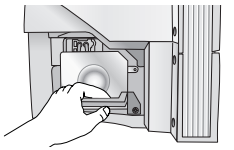

5 To reinstall the Lamp, follow these steps in reverse order.

NOTE

- Be sure the replacement Lamp is the same model.

Your New Wide TV

List of Features

Your TV was designed and engineered using the latest technology. It is a full-featured, high-performance unit that exceeds industry standards. In addition, it has these special features:

- Easy-to-operate remote control
- Easy-to-use on-screen menu system you can access from the side panel or remote control
- Automatic timer to turn the TV on and off at any time you choose
- Adjustable picture and sound settings and the ability to memorize your favorite settings
- Automatic channel tuning for up to 181 channels
- A special filter to reduce or eliminate reception problems
- Fine tuning control for the sharpest picture possible
- A built-in multi-channel sound decoder for stereo and bilingual listening
- Built-in, dual channel speakers
- A special sleep timer
- Picture-in-Picture capability that lets you watch two channels at once
- Widescreen TV with adjustable image size

Checking Parts

Once you have unpacked your TV, check to make sure that you have all the parts shown here. If any piece is missing or broken, call your dealer.

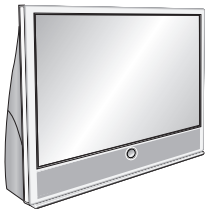

Television

Remote Control (BP59-00016A)/ AAA Batteries (4301-000121)

This Manual

Warranty Card

A/V Cable (AA39-40001B)

Side Panel Buttons

The buttons on the side panel control your TV's basic features, including the on-screen menu system. To use the more advanced features, you must use the remote control.

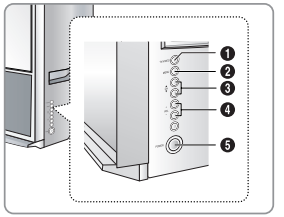

◀ HLN467W
◀ HLN567W

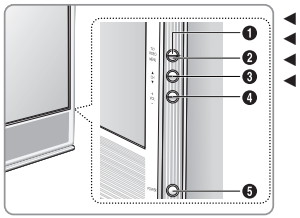

◀ HLN437W
◀ HLN507W
◀ HLN4365W
◀ HLN5065W

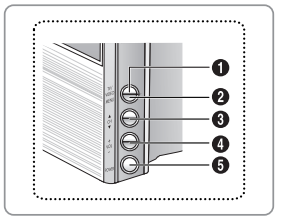

◀ HLN617W

❶ **TV/VIDEO**
Press to switch between viewing TV programs and signals from connected components.

❷ **MENU**
Press to see the on-screen menu.

❸ **▼ CHANNEL ▲**
Press to change channels and move between items on the on-screen menu.

❹ **VOLUME +, –**
Press to lower or raise the volume and to select items when using the on-screen menu.

❺ **POWER**
Press to turn the TV on and off.

Side Panel Jacks

Use the side panel jacks to connect a component that is used only occasionally (a camcorder or video game, for example).

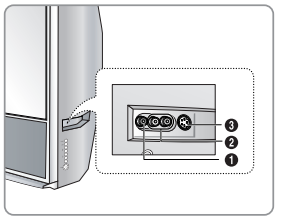

◀ HLN467W
◀ HLN567W

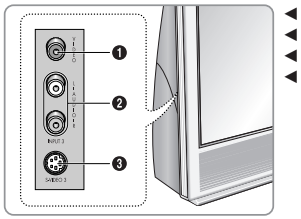

◀ HLN437W
◀ HLN507W
◀ HLN4365W
◀ HLN5065W

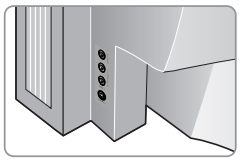

◀ HLN507W
◀ HLN617W
◀ HLN5065W

❶ **VIDEO Input jack**
Connect the video signal from a camcorder or video game.

❷ **AUDIO Input jacks**
Connect the audio signal from a camcorder or video game.

❸ **S-VIDEO Input jack**
Connect an S-video signal from a camcorder or video game.
(S-Video 3 jack and Audio L/R input 3 are used in conjunction.)

Your New Wide TV

Front Panel LED Indicators

The three lights on the front panel indicate the status of your TV.

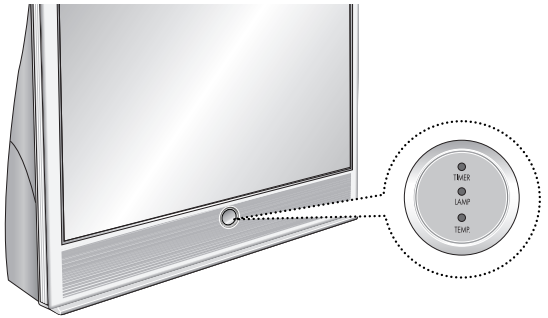

Indicator Light Key

● : Light is On
◑ : Light is Blinking
○ : Light is Off

Timer	Lamp	Temp	Indication
●	○	○	Auto Timer ON/OFF has been set
○	●	○	The set is operating normally .
○	◑	○	Standby state. The picture will automatically appear in about 25 seconds.
●	●	○	Auto Timer ON/OFF has been set and the set is normally operating.
●	◑	○	Auto Timer ON/OFF has been set and the set will automatically be turned on in about 25 seconds.
◑	○	◑	A cooling fan inside the set is not operating normally.
○	◑	◑	Lamp cover on rear of the set is not properly shut.
○	○	◑	Check if the ventilation hole on the rear of the set is blocked, because if the inner temperature is too high, the power will shut off.
◑	◑	◑	Lamp may be defective. Please contact a certified technician.

- It takes about 30 seconds for the TV to warm up, so normal brightness may not appear immediately.
- The TV has a fan to keep the inside lamp from overheating. You'll occasionally hear it working.

Rear Panel Jacks

Use the rear panel jacks to connect components such as a VCR.
You can connect two different components such as two VCRs, Set-Top Box and a DVD player etc., because there are two sets of video input jacks and one set of component video input jacks on the rear panel of your TV. For more information, please see "Connections".

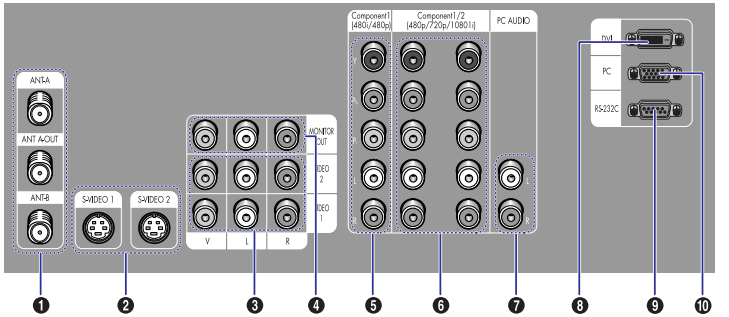

❶ **ANTENNA terminals**
Two independent cables or antennas can be connected to these terminals. Use ANT-A and ANT-B terminals to receive a signal from VHF/UHF antennas or your cable system. Use the ANT A-OUT terminal to send the signal being received by the ANT-A terminal out to another component (such as a Cable Set Top Box).
The PIP channel can be received only when a signal source is connected to ANT-A.

❷ **S-VIDEO INPUT jacks**
Connects an S-Video signal from an S-VHS VCR or DVD player.

❸ **VIDEO/AUDIO INPUT jacks(VCR1, VCR2)**
Connect video/audio signals from external sources, such as a VCR or DVD players.

❹ **VIDEO/AUDIO MONITOR OUTPUT jacks**
Sends a video signal from the TV to an external source, such as a VCR.
Note: Monitor Out is available only in RF, Video and S-Video modes.

❺ **Component1 jacks (Y, Pb, Pr, L, R)**
Use these jacks to connect the component video/audio signals from a DVD player when using the component video input jacks.
Note: Only 480i and 408p formats are supported.

❻ **Component 2, 3 jacks (Y, Pb, Pr, L, R)**
Receives the DTV video/audio signals from a set top box.
Note: Only 480p, 720p and 1080i formats are supported.

❼ **PC AUDIO INPUT jacks**
Connect these to the audio-output jacks on your PC.

❽ **DVI (Digital Video Interface) jack**
Receives the digital signals from a set top box or PC etc.

❾ **RS-232C jack**

❿ **PC VIDEO INPUT jack**
Connect to the video output port on your PC.

Remote Control

You can use the remote control up to a distance of about 23 feet from the TV. When using the remote, always point it directly at the TV. The remote control can also operate your VCR, cable box, and DVD player.

1. **POWER**
   Turns the TV on and off.
2. **+100**
   Press to select cable channels over 100 on TV.
3. **Menu**
   Displays the main on-screen menu.
4. **CH(Channel) and VOL(Volume)**
   Controls volume, channel selection.
5. **Mute**
   Press to mute the TV sound.
6. **Display**
   Press to display information on the TV screen.
7. **Aspect**
   Press to change the screen size.
8. **Surround**
   Press to hear the Dolby surround effect.
9. **MTS(Multichannel Television Stereo)**
   Press to choose stereo, mono or Separate Audio Program (SAP broadcast).
10. **Mode**
    Selects a target device to be controlled by the Samsung remote control (i.e., TV, VCR, Cable, or DVD).
11. **Pre-ch**
    Tunes to the previous channel.
12. **TV/Video**
    Press to display all of the available video sources (i.e., TV, VCR, DVD, DTV, PC).
13. **Joystick**
    Use to highlight on-screen menu items and change menu values.
14. **DNIe**
    Activates DNIe (Digital Natural Image engine).
15. **PIP**
    Activates picture in picture.
16. **Still**
    Press to stop the action during a particular scene. Press again to resume normal video.
17. **Fav.CH (Favorite Channel)**
    Press to switch between your favorite channels.
18. **S.Mode**
    Adjust the TV sound by selecting one of the preset factory settings (or select your personal, customized sound settings.)
19. **P.Mode**
    Adjust the TV picture by selecting one of the preset factory settings (or select your personal, customized picture settings.)
20. **VCR controls**
    Controls VCR tape functions: Rewind, Play, Fast Forward, Stop, Pause.
21. **PIP controls**
    Source ; Press to select one of the available signal sources for the PIP window.

    Scan; Press to scan the memorized channels.

    Locate; Press to move the PIP window to any of the four corners of the TV screen.

    Swap; Exchanges the video signal that is currently displayed on the main screen with the signal in the PIP window.

    Size; Press to make the PIP window larger or smaller.

    CH(PIP); Displays the available channels in sequence. (These buttons change channels in the PIP window only.)
22. **V.chip**
    Press to set up and activate the parental locks.
23. **Set**
    Used during set up of this remote control, so that it will work compatibly with other devices (VCR, cable box, DVD, etc.)
24. **Sleep**
    Press to select a preset time interval for automatic shutoff.
25. **Add/Erase**
    Press to add or erase channels in the TV's memory.
    Use the Add/Erase button to memorize/erase the fine tuning after fine tuning channels.

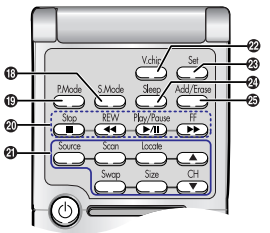

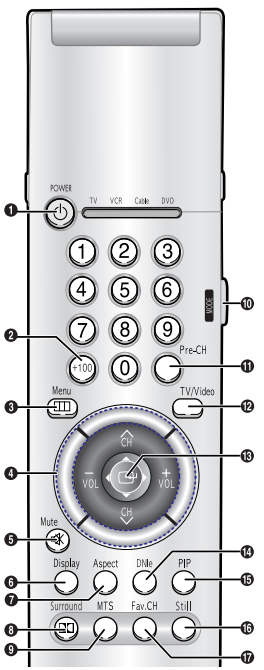

Installing Batteries in the Remote Control

With normal use, the batteries in the remote control should last about a year. If you notice a performance degradation while using the remote, the batteries may need to be replaced. Make sure you replace both batteries and do not mix old and new batteries in the remote control. If you won't be using the remote control for a long time, remove the batteries and store them in a cool dry place.

1 Slide the back cover all the way out to open the battery compartment of the remote control.

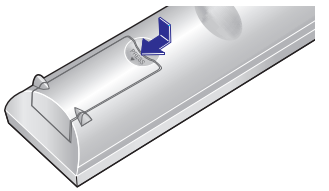

2 Install two AAA size batteries. Make sure to match the "+" and "–" ends of the batteries with the diagram inside the compartment.

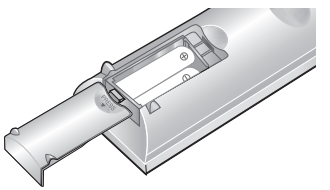

3 Slide the cover back into place.

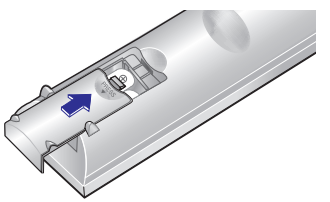

SAMSUNG

Connections

Connecting VHF and UHF Antennas

If you do not have a cable system, you will need to connect an antenna to your TV.

Antennas with 300-ohm Flat Twin Leads

If your antenna looks like this: 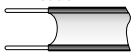 it has 300-ohm flat twin leads.

1 Place the wires from the twin leads under the screws on the 300-75 ohm adapter. Use a screwdriver to tighten the screws.

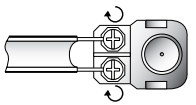

2 Plug the adapter into the ANT-A terminal on the back panel of the TV.

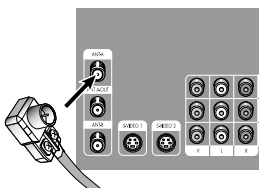

Antennas with 75-ohm Round Leads

If your antenna looks like this: it is an antenna with 75-ohm round leads.

1 Plug the antenna lead into the ANT-A terminal on the back panel of the TV.

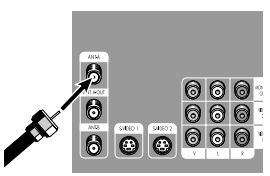

Separate VHF and UHF Antennas

If you have two separate antennas for your TV (one VHF and one UHF), you must combine the two antenna signals before connecting them to the TV. This requires a combiner attachment, which you can buy at an electronics store.

1 Connect both antenna leads to the combiner.

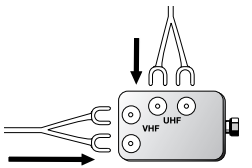

2 Plug the combiner into the ANT-A terminal on the back panel of the TV.

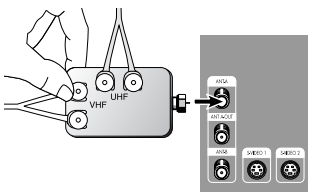

Connecting Cable TV and VCR

You can connect different cable systems to your TV, including cable without a cable box, and cable with a cable box that descrambles some or all channels.

Cable without a Cable Box

If you want to connect cable, and you do not need to use a cable box:

1 Plug the incoming cable into the ANT-A antenna terminal on the back of the TV.

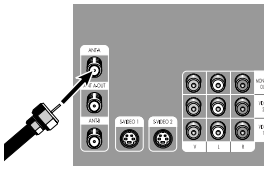

Cable with a Cable Box that Descrambles All Channels

1 Find the cable that is connected to the ANTENNA OUT terminal on your cable box. This terminal might be labeled "ANT OUT," "VHF OUT," or simply, "OUT."

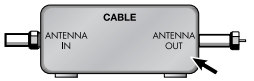

2 Connect the other end of this cable to the ANT A antenna terminal on the back of the TV.

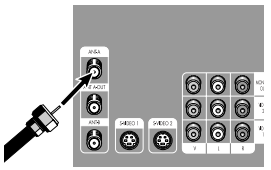

Connecting a Cable Converter Box

This connection allows you to watch cable and premium channels. You should keep your TV selected to ANT-A so that you can use the TV features. When viewing premium channels, select ANT-B and tune the TV to channel 3 or 4 (whichever channel is vacant in your area), then use the converter box to change channels. You will need two coaxial cables.

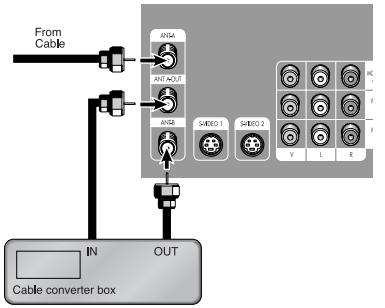

Note: When you use a converter box with your TV, there may be features that you can not program using the remote control, such as programming your favorite channels and blocking channels.

Connecting a Cable Converter Box and a VCR

This connection allows you to watch and record basic and premium cable channels, as well as watch videotapes. You should keep your TV selected to ANT-A so that you can use the TV's features. When viewing premium channels or recording with the VCR, select ANT-B (whichever channel is vacant in your area), then use the converter box to change channels.

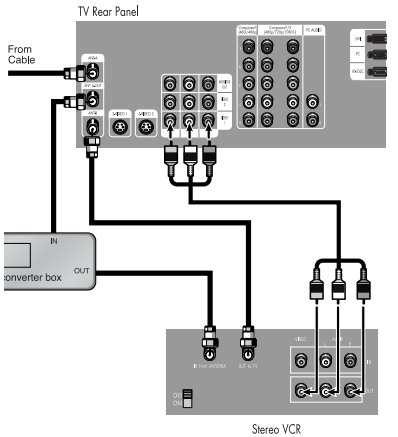

Caution: If you want to record one channel while watching another channel, a splitter (not included) must be added between the cable and ANT-A. One output of the splitter goes to ANT-A and the second output is connected to IN on the cable converter box.

If you have a mono VCR, connect L/Mono to VCR Audio OUT using only one audio cable.

If you have a S-VHS VCR, use the S-video connections and remove the video cable. Do not connect the video cable and the S-video cable to video1 simultaneously.

When you use a converter box with your TV there may be features that you can not program using the remote control, such as programming your favorite channels and blocking channels.

Connecting a Camcorder

The side panel jacks on your TV make it easy to connect a camcorder to your TV. You can use your camcorder to view tapes without using a VCR.

1 Locate the A/V output jacks on the camcorder. They are usually found on the side or back of the camcorder.

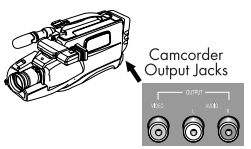

2 Connect an audio cable between the AUDIO OUTPUT jack on the camcorder and the AUDIO terminals on the side of the TV.
If your camcorder is stereo, you must connect two separate cables.
(The audio cables are usually included with the camcorder.)

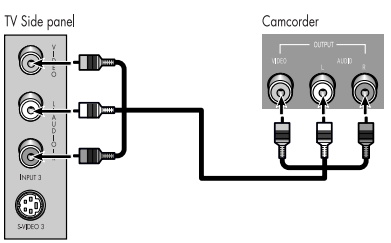

3 Connect a video cable between the VIDEO OUTPUT jack on the camcorder and the VIDEO terminal on the side of the TV. (A video cable is usually included with the camcorder.) To watch a tape, follow your camera's instructions and the section on "Viewing an External Signal Source" in this manual.

Connecting a DVD Player

The rear panel jacks on your TV make it easy to connect a DVD player to your TV.

Connecting to Y,Pb,Pr

1 Connect a set of audio cables between the Component1 AUDIO IN jacks on the TV and the AUDIO OUT jacks on the DVD player.

2 To enable Component video viewing, connect video cables between the Component1 (Y, Pb and Pr) jacks on the TV and Y, Pb and Pr (or Y, Cb, Cr) output jacks on the DVD player.

Note: For an explanation of Component video, see your DVD player's owner's manual.

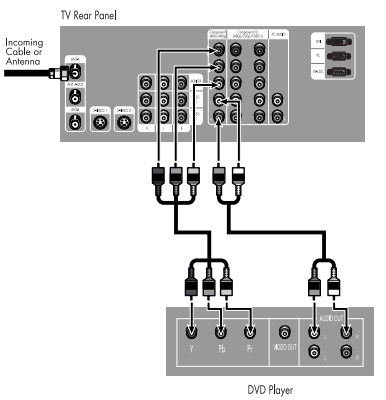

Connecting to audio and video jacks

1 Connect a set of audio cables between the AUDIO IN jacks on the TV and the AUDIO OUT jacks on the DVD player.

2 Connect video cables between the VIDEO OUT jack on the DVD player and the VIDEO IN jack on the TV.

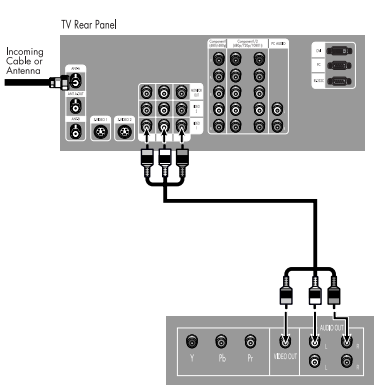

Connecting a DTV Set Top Box

Connecting to Y,Pb,Pr

1 Connect a set of audio cables between the Component2 or Component3 AUDIO IN jacks on the TV and the AUDIO OUT jacks on the Set Top Box.

2 Connect video cables between the Component2 or Component3 Y, Pb and Pr inputs on the TV and Y, Pb and Pr (or Y, Cb, Cr) outputs on the Set Top Box.
Note: For an explanation of Component video, see your Set Top Box owner's manual.

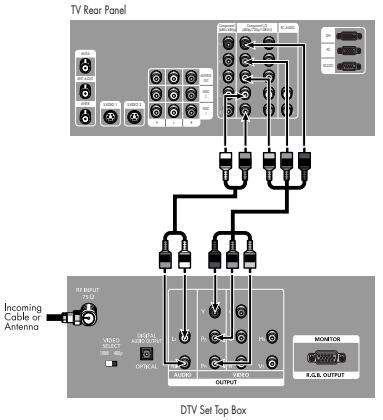

Connecting to DVI (Digital Visual Interface)

1 Connect a set of audio cables between the PC AUDIO IN jacks on the TV and the AUDIO OUT jacks on the Set Top Box.

2 Connect video cables between the DVI IN jack on the TV and the DVI OUT jack on the Set Top Box.

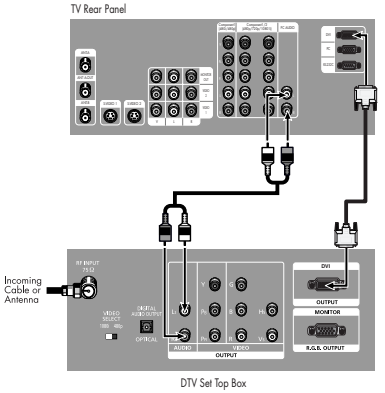

Connecting to R,G,B

1 Connect a set of audio cables between the PC AUDIO IN jacks on the TV and the AUDIO OUT jacks on the Set Top Box.

2 Connect video cables between the PC IN jack on the TV and the R.G.B OUT jack on the Set Top Box.

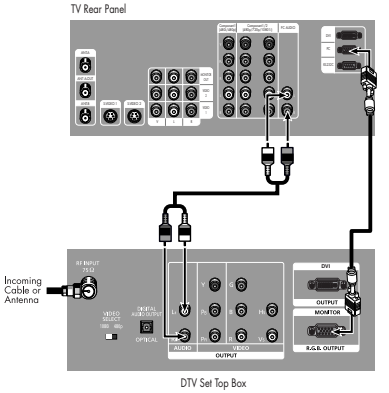

SAMSUNG

Operation

Turning the TV On and Off

Press the Power button on the remote control or on the side panel to turn your TV on and off.

Viewing the Menus and Displays

The on-screen menu system allows you to control the settings of your TV. Access the on-screen menu system by pressing the Menu button on the remote control. Once the on-screen menu appears, use the joystick button on your remote control to move between menu items, select menu items, and make adjustments. You can also view the on-screen menu system and make some adjustments using the TV's side panel buttons.

Displaying the Menus

1 With the power on, press the Menu button on the remote control. The main menu appears on the screen.
The Video menu is selected.

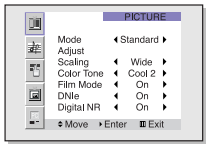

2 Use the joystick (up, down) or CH(∧, ∨)buttons to move to items in the menu. Use the joystick (right) or VOL(+) buttons to display, change, or use the selected items. Use the joystick (⇨ or ▶) button to enter items in the menu.
On-screen menus disappear from the screen automatically after about thirty seconds, or you can press the Menu button on your remote control to exit the menu.

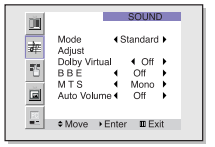

Displaying Status Information

1 Press the Display button on the remote control. The TV will display the channel, current time, and the audio signal you are listening to.

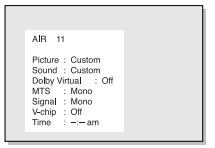

Selecting the Menu Language

Choose a language for the on-screen menus: English, Spanish or French.

1 Press the Menu button.
Move the joystick down to select SETUP, then press the joystick to enter.

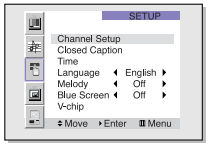

2 Move the joystick down to select "Language."

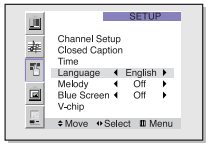

3 Move the joystick right or left to select the language.
Press the Menu button on the remote control to exit the menu.

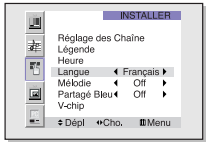

Selecting the Antenna Input

You can connect to two different signal sources by choosing the antenna input(ANT A or ANT B).

1 Press the Menu button.
Move the joystick down to select SETUP, then press the joystick to enter.

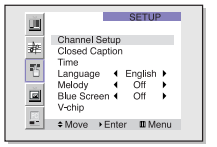

2 Press the joystick to enter. The channel setup menu will appear. The first line of the menu is selected.

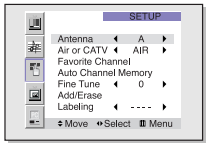

3 Move the joystick right or left to select "A" or "B".
Press the Menu button on the remote control to exit the menu.