System Block Diagram

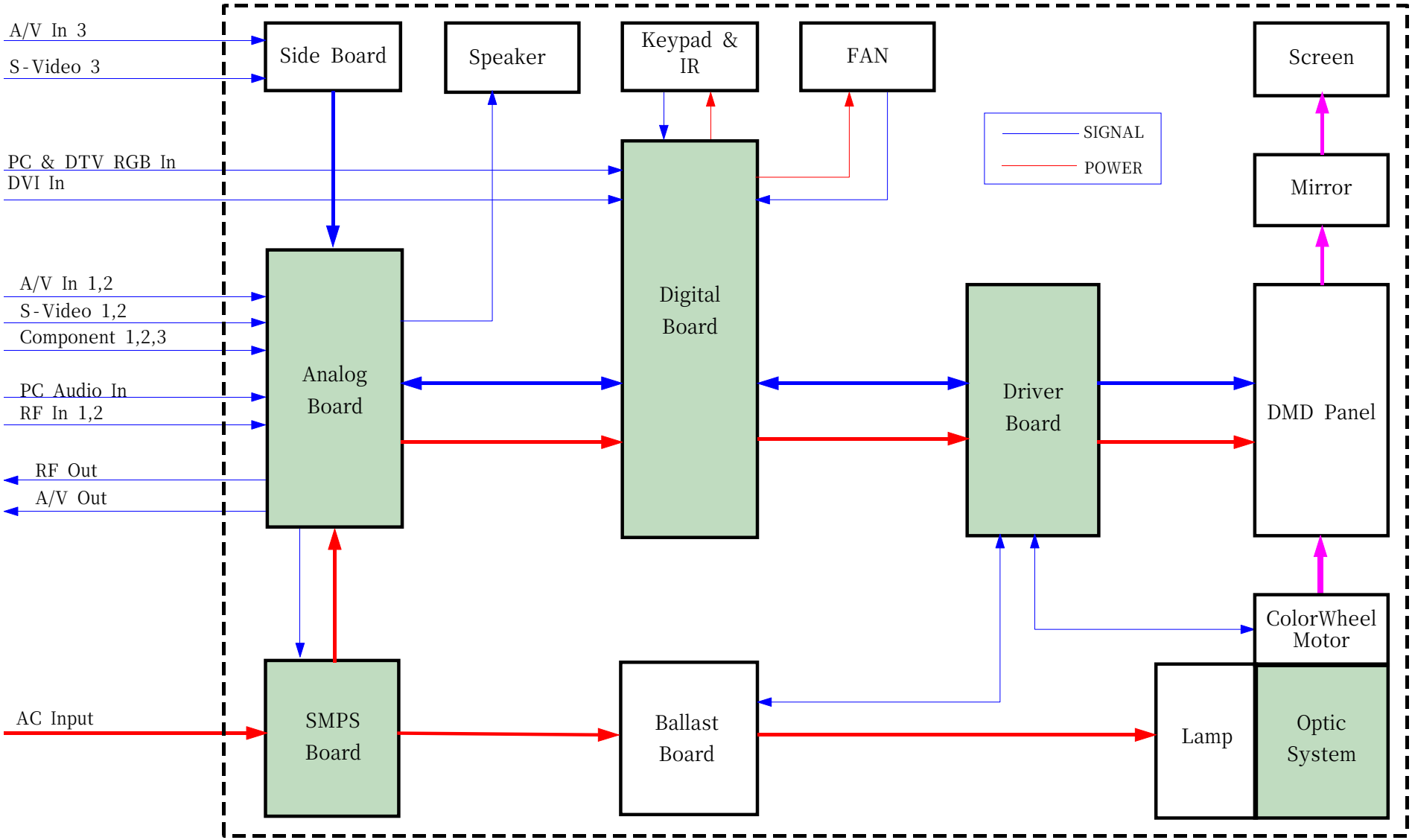

Analog Board Block Diagram

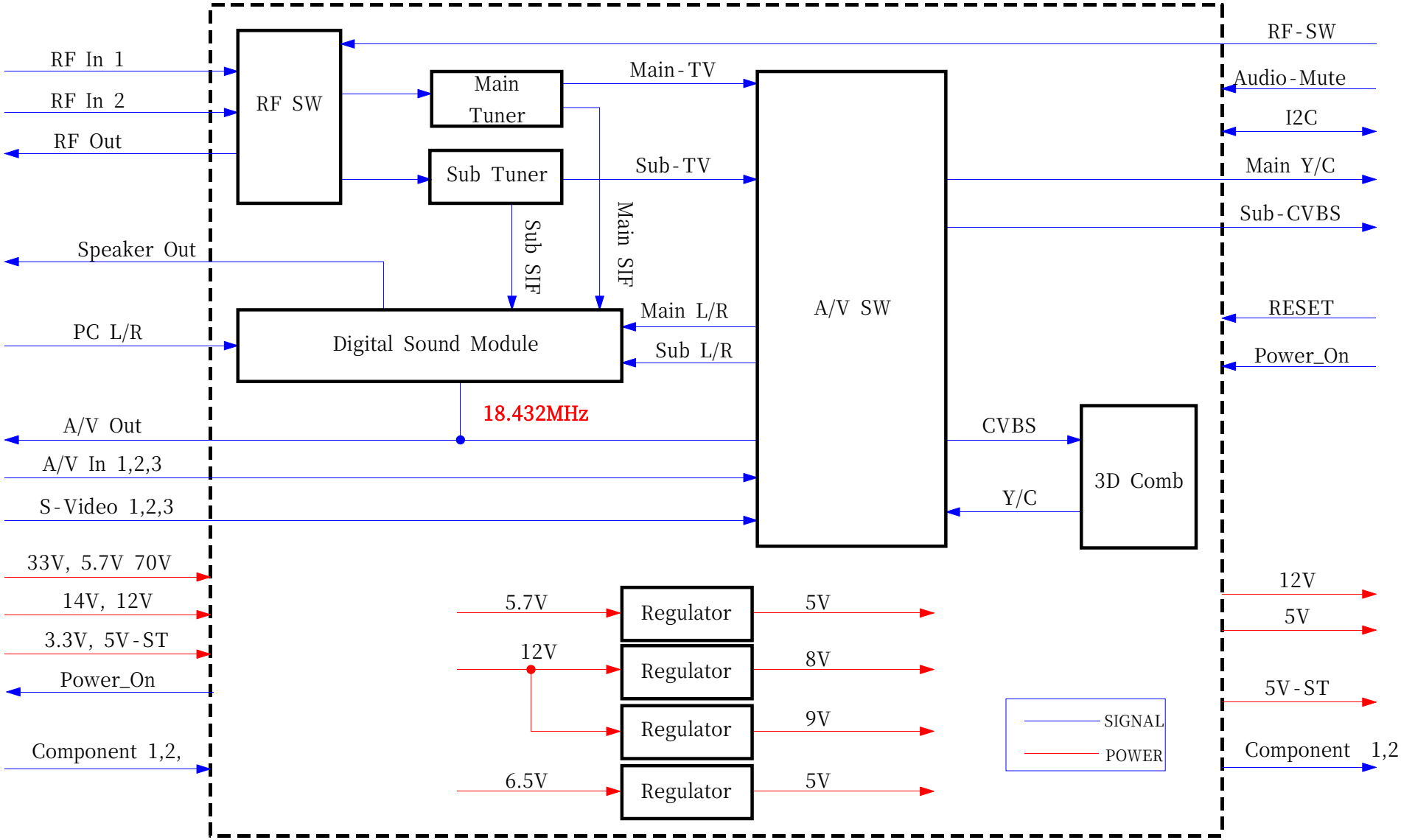

Digital Board Block Diagram

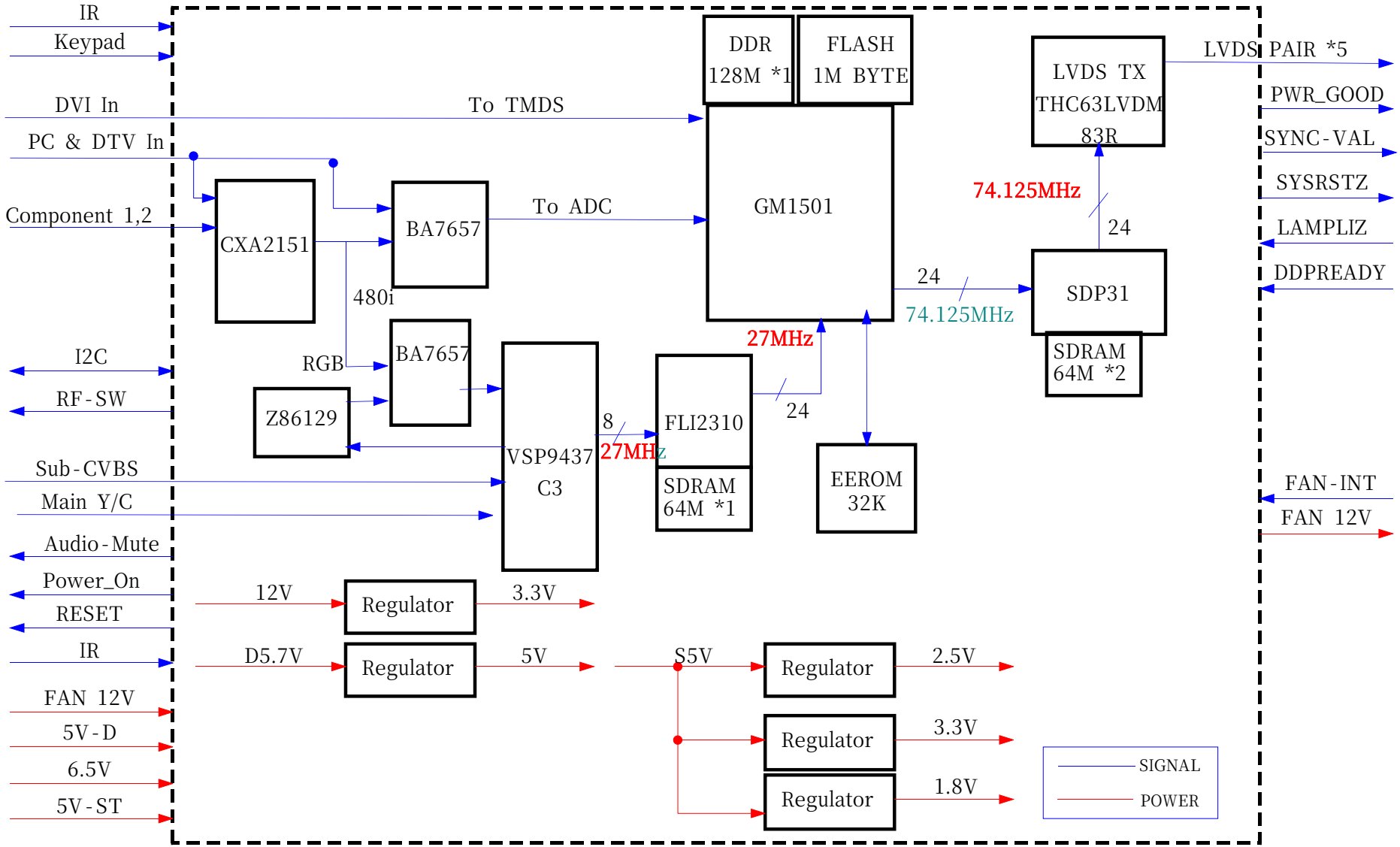
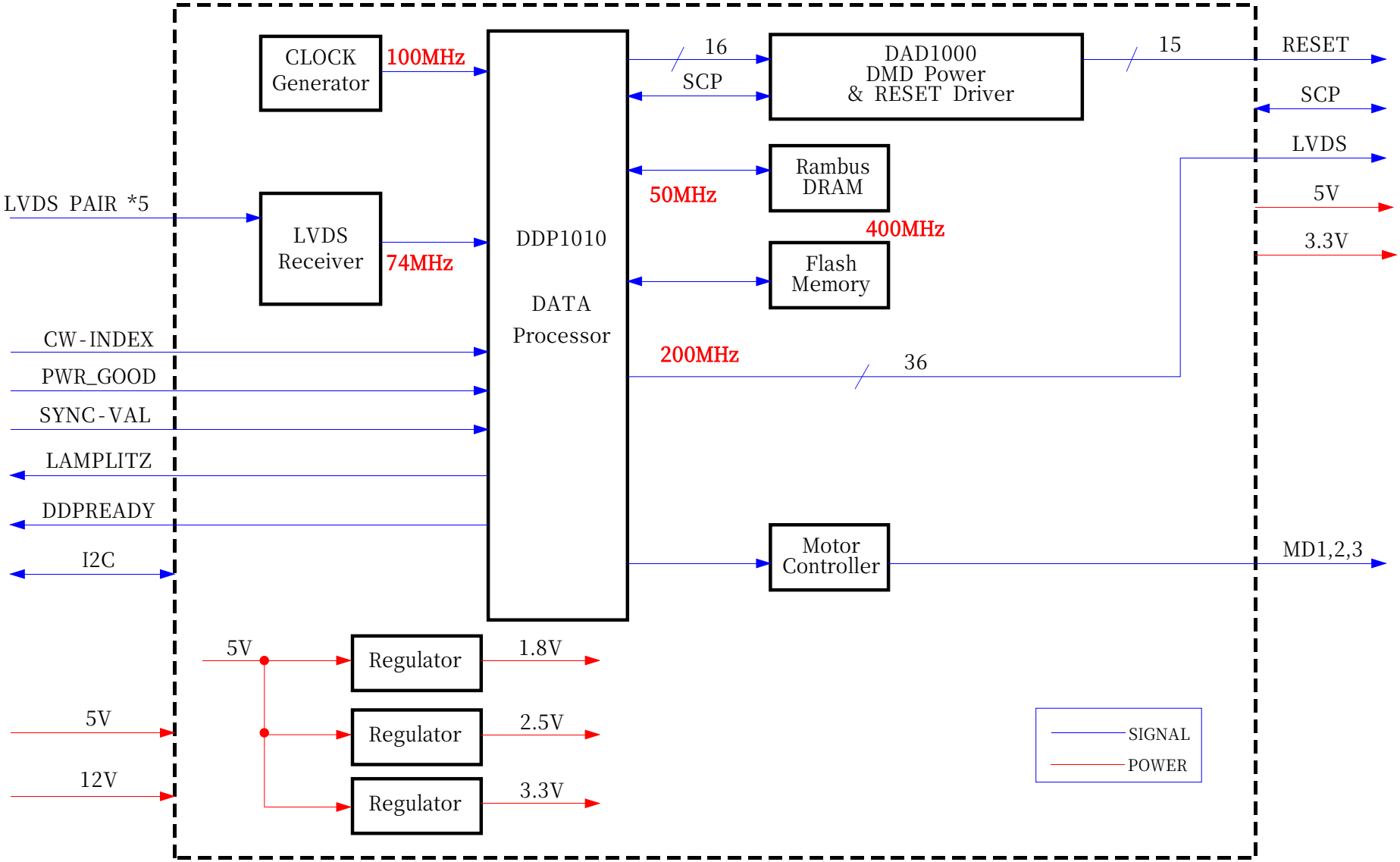
Driver Board Block Diagram