SAMSUNG ELECTRONICS

EMI TEST REPORT

FCC Part 15 Subpart B, Class B

Product : Internet Phone
Model No. : ITP-110

JOB NO. : 01ISM213

1. *This test reports shall not be reproduced except in full, without the written approval of SEC EMC Testing laboratory.*
2. *This test reports does not constitute an endorsement by NIST/NVLAP or U.S Government.*
3. *This test report is to certify that the tested device properly complies with the requirements of FCC Rules and Regulations Part 15 Subpart B Unintentional Radiators. All tests necessary to show compliance to the requirements were and these results met the specifications requirement.*

Date of test : May 3, 2001

Issued Date : May 7, 2001

Prepared by:
Kyung Dong. KIM / Test Engineer

Reviewed by:
Chun Kil. KIM / Technical Manager

Authorised by:
Yang Su. KIM / Quality Manager

This laboratory is registered by the NIST/NVLAP, U.S.A.
The test reported herein have been performed in accordance with its terms of registration.

NVLAP®
LAB CODE : 200447-0

Table of Contents

1. General Information
1.1 Product Description
1.2 Tested System Details
1.3 Test Methodology
1.4 Test Facility

2. System Test Configuration
2.1 Operation Environment
2.2 Justification
2.3 EUT Exercise Software
2.4 Test Procedure
2.5 Test System configuration

3. Conducted and Radiated Measurement Photos
3.1 Conducted Measurement Photos
3.2 Radiated Measurement Photos

4. Measurement Uncertainty
4.1 Conducted Emission Test
4.2 Radiated Emission Test

5. Conducted Emission Test Data

6. Radiated Emission Test Data

7. Label and Label Location

8. Test Equipment Used

1. General Information

APPLICANT	:	SAMSUNG ELECTRONICS CO., LTD.
ADDRESS	:	416, Maetan-3Dong, Paldal-Gu Suwon-City, Kyungki-Do, Korea 442-742
CONTACT PERSON	:	Seung Hun, KIM TEL. +82-31-218-7060
CONTACT ADDRESS	:	416, Maetan-3Dong, Paldal-Gu Suwon-City, Kyungki-Do, Korea 442-742
REGULATION(S)	:	FCC Part 15 Subpart B, Class B
MODEL NUMBER	:	ITP-110
SERIAL NUMBER	:	-
KIND OF PRODUCT	:	Internet Phone
TESTED DATE	:	May 3, 2001
TEST SITE	:	3meter semi-anechoic chamber
TEST SITE ADDRESS	:	San 14, Nongseo-Ri, Kihung-Eup, Yongin-City, Kyungki-Do, Korea, 449-900

1.1 Product Description

The Samsung Internet Phone, ITP-110 uses data networks such as the Internet for placing and receiving phone calls. This makes it possible for companies to support their phone service needs over the same networks used to support their computer services.
This uses system clock(11.52MHz), real time clock(32.768MHz), Ethernet clock(25MHz) and DSP system clock(12.288MHz).
The input voltage is AC100V~240V and operating voltage is DC 5V.
See the attached ITP-110 User's Guide for more information.

1.2 Tested System Details

The FCC IDs for all equipment, plus descriptions of all cables used in the tested system are:

	Device Type	Manufacturer	Model Number	Serial No.	FCC ID / DoC
(1)	Internet Phone (EUT)	Samsung	ITP-110	N/A	A3LITP110
(2)	PC	SAMSUNG	TD260-DT	C92DK409981	FCC DoC
(3)	Monitor	Samsung	SyncMaster 17GLsi	H3MF400637	FCC DoC
(4)	Keyboard	HP	5183-9980	J94003612	FCC DoC
(5)	Mouse	Sejin	SMB-400	4FEF027845	GJJS965CO
(6)	Card Reader	DATAFAB	MDSM-B-USB	0223420865	FCC DoC
(7)	Laser Printer	Samsung	ML-85	B1AJ700174	A3LML85

1.3 Test Methodology

Both conducted and radiated testing were performed according to the procedures in FCC/ANSI C63.4(1992).
Radiated testing was performed at a distance of 3 meters from the antenna to EUT.

1.4 Test Facility

All test described in this report were performed by :

Open area test site : 781-14, Chung-Ri, Dongtan-Myun, Hwasung-Kun, Kyungki-Do, Korea
Conducted measurement facility and 3meter Semi-anechoic chamber :
San 14, Nongseo-Ri, Kihung-Eup,Yongin-City, Kyungki-Do, Korea, 449-900

2. System Test Configuration

2.1 Operation Environment

	Conduction	Radiation
Temperature [ ] :	25	25
Humidity [%] :	30	30
Power supply :	AC120V/60Hz	AC120V/60Hz

2.2 Justification

The system was configured in typical fashion(as a customer would normally use it) for testing.

2.3 EUT Exercise Soft ware

None
(EUT was calling state and PC was connected on the internet via EUT.)

2.4 Test Procedure

2.4.1 Conducted Emissions

EUT was placed on a platform of nominal size, 1m by 1.5m, raised 80cm above the conducting ground plane. The rear of tabletop was located 40cm to the vertical conducting ground plane.
The rear of EUT, including peripherals was aligned and flush with rear of tabletop.
All other surfaces of tabletop was at least 80cm from any other grounded conducting surface. I/O cables and AC cables that were connected to the peripherals were bundled in center. They were folded back and forth forming a bundle 30cm to 40cm long and were hanged at a 40cm height to the ground plane.
Each EUT current-carrying power lead, except the ground(safety) lead, were individually connected through a LISN to the input power source.

All unused 50 ohm connectors of the LISN were resistively terminated in 50 ohm when not connected to the measuring equipment.

2.4.2 Radiated Emissions

EUT was placed on a platform of nominal size, 1m by 1.5m, raised 80cm above the conducting ground plane.
The rear of EUT, including peripherals was aligned and flush with rear of tabletop.
I/O cables that were connected to the peripherals were bundle in center.
They were folded back and forth forming a bundle 30cm to 40cm long and were hanged 40cm height to the ground plane.
Test was made with the antenna positioned in both the horizontal and vertical planes of polarization. The measurement antenna was varied in height above the conducting ground plane to obtain the maximum signal strength.

2.5 Test System configuration

2.5.1 System Block Diagram of Test Configuration

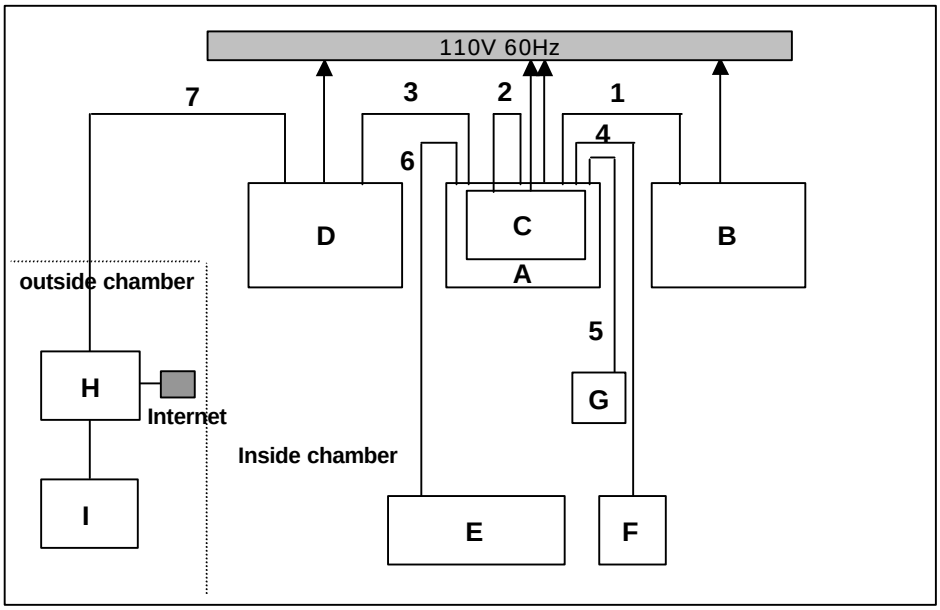

2.5.2 Configuration of EUT and peripherals

Mark	Item	Model No.	Serial No.	Manufacturer	Remark
A	Personal Computer	TD260-DT	C92DK409981	Samsung	
B	Laser Printer	ML-85	B1AJ700174	Samsung	
C	Monitor	SyncMaster 17GLsi	H3MF400637	Samsung	
D	Internet Phone	ITP-110	N/A	Samsung	EUT
E	Keyboard	5183-9980	J94003612	HP	
F	PS/2 Mouse	SMB-400	4FEF027845	SEJIN	
G	Card Reader	MDSM-B-USB	0223420865	DATAFAB	
H	HUB	MPR-1200D	9309895	Samsung	
I	IP Phone	ITP-110	N/A	Samsung	
	Adaptor	NSM-300	N/A	Sun-Korea	

2.5.3 Used Cable Description

No.	Item	Length[m]	Shielded(Y/N)	Remark
1	Centronics Cable	1.8	Y	IEEE1284
2	Video cable	1.5	Y	D-Sub
3	Ethernet cable	1.7	N	RJ45
4	PS/2 Cable	1.5	N	Mouse
5	USB cable	1.5	N	USB
6	PS/2 Cable	1.5	N	Keyboard
7	Ethernet cable	15	N	RJ45

This report shall not be reproduced except in full, without the written approval of SEC EMC Testing laboratory.

3. Conducted and Radiated Measurement Photos

* Cabling was taken into consideration and test data was taken under worse case conditions.

3.1 Conducted Measurement Photos

Conduction(Front View)

Conduction(Rear View)

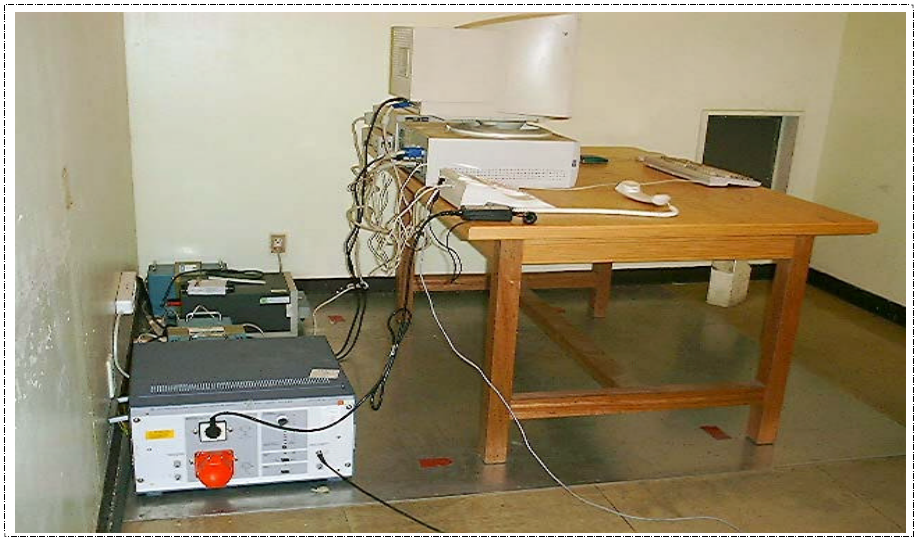

* Cabling was taken into consideration and test data was taken under worse case conditions.

3.2 Radiated Measurement Photos

Radiation(Front View)

Radiation(Rear View)

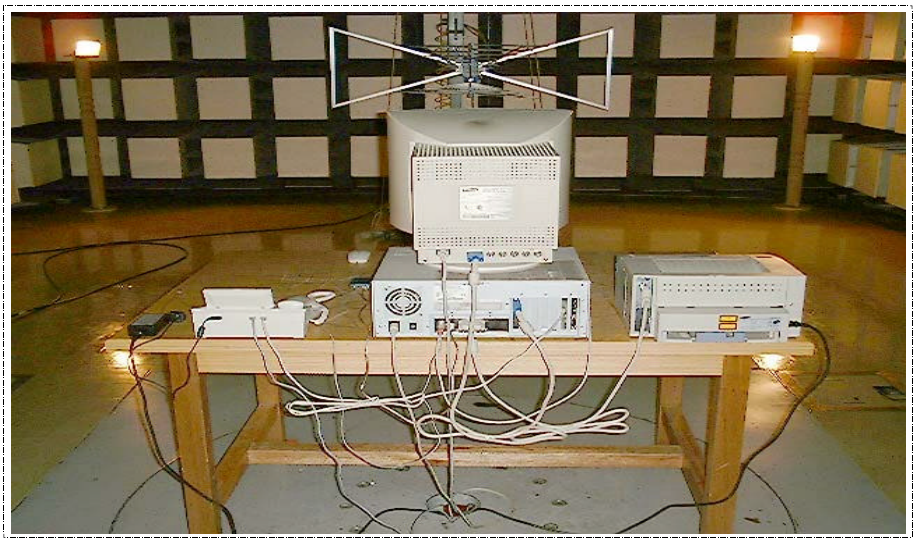

4. Measurement Uncertainty

All data in report are to be traceability to the national or international standards.

4.1 Conducted Emission Test

The measurement uncertainty(with a 95% confidence level)for this test was ±2.2dB.

The data listed in this test report may exceed the test limit because it does not have enough margin(more than 2.0dB).

The data listed in this test report has enough margin, more than 2.0dB.

4.2 Radiated Emission Test

The measurement uncertainty(with a 95% confidence level)for this test was ±3.4dB.

The data listed in this test report may exceed the test limit because it does not have enough margin(more than 2.0dB).

The data listed in this test report has enough margin, more than 3.4dB.

5. Conducted Emission Test Data

The initial step in collecting conducted data was to perform a quasi-peak scan over the measurement range using a spectrum analyzer.
During between calling and connecting on internet, quasi-peak level was investigated and the worst-case emission are reported.
All other emission are non-significant.

The minimum margin to the limit is as follows :

Frequency	:	**0.501**	[MHz]
Meter Reading	:	**37.75**	[dBuV]
LISN Loss	:	**0.12**	[dB]
Cable loss	:	**0.5**	[dB]
Corrected Readings	:	**38.37**	[dBuV/m]
Margin	:	**-9.59**	[dB]

Test Data Sheet

Tested Frequency [MHz]	Meter Reading [A] [dBuV]	LISN Pol. [L1/L2]	Factor[B] LISN Loss [dB]	Factor[B] Cable Loss [dB]	Corrected Reading [A+B] [dBuV/m]	Limits [dBuV/m]	Margin [dB]
0.501	**37.75**	**L2**	**0.12**	**0.50**	**38.37**	**47.96**	**-9.59**
0.755	**35.31**	**L2**	**0.14**	**0.40**	**35.85**	**47.96**	**-12.11**
0.880	**37.65**	**L1**	**0.14**	**0.40**	**38.19**	**47.96**	**-9.77**
1.005	**36.54**	**L2**	**0.14**	**0.50**	**37.18**	**47.96**	**-10.78**
1.384	**34.88**	**L2**	**0.16**	**0.45**	**35.49**	**47.96**	**-12.47**
2.009	**34.08**	**L1**	**0.18**	**0.40**	**34.66**	**47.96**	**-13.30**
20.000	**33.91**	**L1**	**0.55**	**0.80**	**35.26**	**47.96**	**-12.70**

* All readings are quasi-peak mode.
* The selected bandwidth in emission testing is 9kHz.
* Results = Meter Reading + LISN Insertion loss + Cable loss
* Margin = Corrected Reading - Limits
* L1 = Hot, L2 = Neutral

6. Radiated Emission Test Data

The initial step in collecting conducted data was to perform a quasi-peak scan over the measurement range using a spectrum analyzer.
During between calling and connecting on internet, quasi-peak level was investigated and the worst-case emission are reported.
All other emission are non-significant.

The minimum margin to the limit is as follows :

Frequency	**485.20**	[MHz]
Meter Reading	**22.6**	[dBuV]
Antenna Factor	**15.20**	[dB]
Cable loss	**2.38**	[dB]
Corrected Reading	**40.2**	[dBuV/m]
Margin	**-5.82**	[dB]

Test Data Sheet

Frequency Range [MHz]	Tested Frequency [MHz]	Ant. Pol.	Meter Reading [A] [dBuV]	Factor[B] Ant. Factor [dB]	Factor[B] Cable Loss [dB]	Antenna Height [Cm]	Turn table Degree [Deg]	Corrected Reading [A+B] [dBuV/m]	Margin [dB]	Limits [3m] [dBuV/m]
30 - 88	**48.10**	**H**	**24.3**	**8.00**	**0.10**	**160**	**90**	**32.4**	**-7.60**	**40.0**
	59.60	**V**	**27.4**	**3.60**	**0.20**	**230**	**120**	**31.2**	**-8.80**	
88 - 216	**159.90**	**H**	**27.4**	**7.30**	**0.90**	**180**	**110**	**35.6**	**-7.90**	**43.5**
216 - 960	**229.10**	**H**	**25.3**	**8.40**	**1.42**	**120**	**90**	**35.1**	**-10.88**	**46.0**
	318.60	**H**	**21.0**	**11.60**	**1.68**	**200**	**220**	**34.3**	**-11.72**	
	479.20	**V**	**18.8**	**15.10**	**2.34**	**150**	**120**	**36.2**	**-9.76**	
	485.20	**H**	**22.6**	**15.20**	**2.38**	**340**	**180**	**40.2**	**-5.82**	
960 -										**54.0**

* "<" Means equal or less than * All readings are quasi-peak mode.
* The selected bandwidth in emission testing is 100kHz.
* Corrected Reading = Meter Reading + Antenna Factor + Cable loss
* Margin = Corrected Reading - Limits
* H = Horizontal Polarization/Antenna, V = Vertical Polarization/Antenna

7. Label and Label Location

7.1 Label

7.2 Label location

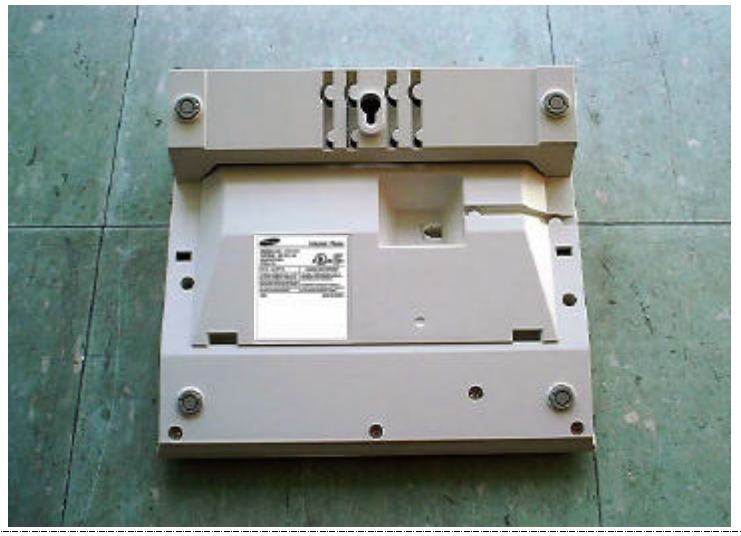

8. Test Equipment Used

Equipment	Model No.	Serial No.	Makers	Last calibration and Interval
Spectrum analyzer	8568B	2928A04826	H.P	00/06/28, 12Months
		Firmware versions : REV 7.4.87		
Quasi-peak adapter	85650A	2811A01342	H.P	00/06/28, 12Months
RF Preselector	85685A	2837A00835	H.P	00/06/28, 12Months
EMI Test Receiver	ESVS30	842807/007	R & S	00/06/02, 12Months
		F/W ver. : Main 3.10, OTP 02.01, GRA 02.03		
L.I.S.N	ESH2-Z5	831886/006	R & S	00/11/30, 12Months
	3825/2	1408	EMCO	00/11/11, 12Months
Biconilog Antenna	HL 562	361324/003	R & S	01/01/22, 12Months
EMI Measurement Software	HP	Firmware versions : Rev. A.00.00		