EMC Test Report

According to FCC Part 15 Subpart B

Project No.	LBE050996
Equipment under Test	
Applicant	Samsung Electronics Co., Ltd. 416 Maetan 3-Dong, Yeongtong-Gu, Suwon-Si, Gyeonggi-Do, Korea, 443-742
FCC ID	**A3LKT35MPB**
Product Name	Laser Beam Printer
Model Name	KT35MPB
Manufacturer	Samsung Electronics Co., Ltd. 259, Gongdan-Dong, Gumi-City, Gyongsandbuk-Do, 730-030 KOREA
Date of Test	May 6, 2005 ~ May 16, 2005
Issued Date	May 16, 2005

	Name/Position	Signature
Tested by	Kyeong Dong, Kim Test Engineer	
Reviewed by	No Cheon, Park Manager of EMC Lab.	
Authorized by	Seung Kyu, Cha Chief of EMC Lab.	

1. This test reports does not constitute an endorsement by NIST/NVLAP or U.S Government.
2. This test report is to certify that the tested device properly complies with the requirements of FCC Rules and Regulations Part 15 Subpart B Unintentional Radiators.
   All tests necessary to show compliance to the requirements were and these results met the specifications requirement.

This laboratory is registered by the NIST/NVLAP, U.S.A.
The test reported herein have been performed in accordance with its terms of registration.

NVLAP LAB CODE 200623-0

3. FCC filing Registration Number : 873282

This report shall not be reproduced except in full, without the written approval of SEC EMC Testing laboratory.

Table of Contents

1. General Information

1.1 Basic Information related Product

1.2 Detail Information related Product

1.3 Operating mode and condition

1.4 Test System Details

1.5 Equipment Modifications

1.6 Test Procedure

1.7 Test Configuration

1.8 Applied Standard

1.9 Test Facility

2. Summary of Test Results

3. Description of individual tests

3.1 Conducted Emission

3.2 Radiated Emission

4. Appendix

4.1 Test Photography

4.2 EUT Photography

This report shall not be reproduced except in full, without the written approval of SEC EMC Testing laboratory.

1. General Information

1.1 Basic Information related Product

Applicant	Samsung Electronics Co., Ltd.
Model name	KT35MPB
Applicant Address	416 Maetan 3-Dong, Yeongtong-Gu, Suwon-Si, Gyeonggi-Do, Korea, 443-742
Contact Person	Kyeong Dong, Kim
Kind of product	Laser Beam Printer
Variant list	Phaser 3500 (Brand : Xerox)
Manufacturer	Samsung Electronics Co., Ltd. 259, Gongdan-Dong, Gumi-City, Gyongsandbuk-Do, 730-030 KOREA
New / Alternative / Permissive change Information	New

This report shall not be reproduced except in full, without the written approval of SEC EMC Testing laboratory.

1.2 Detail Information related Product

Specification

Item	Specification	Remark
Consumables	1-piece toner cartridge system	-
Power consumption	Sleep mode : 11.7W Printing(Average) : 600W	-
Warm-up Time	30 seconds or less	-
Toner Cartridge Life	12,000 pages (for starter, 6,000 pages) @ ISO 19752(LSA 5% Coverage)	-
Power requirements	110~127 VAC, 50/60Hz, 6.5A	-
Set Dimension(W x D x H)	396 x 453 x 348 mm	-
Weight	Net : 17.5 Kg With Toner cartridge Gross : 21 Kg	
Printing method	Laser Beam Printing	-
Printing speed	33 PPM (A4), 35 PPM (Letter) Duplex : 18 IPM (A4), 19 IPM(Letter)	
Print resolution	1200 x 1200 dpi effective output	
Emulation	PCL6 Compatible, PostScript 3, IBM ProPrinter, EPSON	
Interfaces	USB 2.0 Compliant IEEE1284 Bidirectional Parallel Standard Ethernet 10/100 Base TX 802.11a/b/g Wireless LAN	
Memory	32MB Standard(Max. 288MB) 32, 64, 128, or 256 MB optional memory available (Only the Samsung-approved DIMM)	
First printing time	10 seconds or less	
Options	Ethernet 10/100 Base TX Ethernet 10/100 Base TX + 802.11b Wireless LAN Duplex Unit Hard Disk 500 sheet Cassette Tray	

This report shall not be reproduced except in full, without the written approval of SEC EMC Testing laboratory.

Operating Frequency

A. Main clock : 12MHz
B. Video input clock : 12MHz
C. SDRAM Clock : 100MHz
D. PCI Clock : 33 MHz
E. SDRAM Clock(inside N/W card) : 133 MHz
F. Pi chip main Clock(inside N/W card) : 25MHz
G. USB clock : 12MHz
H. Jupiter4e main clock(inside Duplex/SCF board) : 12MHz
I. SDRAM clock(inside Duplex/SCF board) : 36MHz

1.3 Operating Mode and Condition

The system was configured for testing in typical fashion use. Cable were attached to each of the available I/O port. Where applicable, peripherals were attached to the I/O cables.

This EUT is supporting the USB, IEEE1284 and Network(LAN), WLAN printing.

In each test mode, finally we found worst case emission that is above configuration with the Worst case components(in the above table). So, the data of the maximum EUT operation, USB printing(duplex mode) was reported.

1.4 Test System Details

Refer to 1.2

1.5 Equipment Modifications

No equipment modifications were required.

This report shall not be reproduced except in full, without the written approval of SEC EMC Testing laboratory.

1.6 Test Procedure

1.6.1 Conducted Emission

The EUT was placed on a platform nominal size, 1m by 1.5m, raised 80cm above the conducting ground plane. The rear of tabletop was located 40cm to the vertical conducting ground plane.
The rear of EUT, including peripherals was aligned and flush with rear of tabletop.
All other surfaces of tabletop was at least 80cm from any other grounded conducing surface.
I/O cables and AC cables that were connected to the peripherals were bundled in center.
They were folded back and forth forming a bindle 30cm to 40cm long and were handed at a 40cm height to the ground plane.
Each EUT current-carrying power lead, except the ground(safety)lead, were individually connected through a LISN to the input power source.
All unused 50 ohm connectors of the LISN were resistively terminated in 50 ohm when not connected to the measuring equipment.

Frequency Band [MHz]	Instrument	Detector	Resolution Bandwidth	Video Bandwidth
0.15 to 80	EMI Receiver	Quasi-Peak	9kHz	-
		Average	9kHz	-

1.6.2 Radiated Emission

EUT was placed on a platform of nominal size, 1m by 1.5m, raised 80cm above the conducting ground plane.
The rear of EUT, including peripherals was aligned and flush with rear of tabletop.
I/O cables that were connected to the peripherals were bundle in center.
They were folded back and forth forming a bundle 30cm to 40cm long and were hanged 40cm height to the ground plane.

Test was made with the antenna positioned in both the horizontal and vertical planes of polarization. The measurement antenna was varied in height above the conducting ground plane and the run table azimuth was varied to obtain the maximum signal strength

This report shall not be reproduced except in full, without the written approval of SEC EMC Testing laboratory.

The system configuration, clock speed, mode of operation or video resolution, turntable azimuth with respect to the antenna were noted for each frequency found.
The spectrum was scanned from 30 to 1000 MHz using biconi-Log antenna.

Also, the EMI RECEIVER was scanned from 1000 to 1800MHz using linearly polarization Double ridge horn antenna was used. The explanation of measuring instrument setup when Respective function is used in any frequency band is as following;

Frequency Band [MHz]	Instrument	Detector	Resolution Bandwidth	Video Bandwidth
30 to 1000	EMI Receiver	Quasi-Peak	120kHz	-
Above 1000	EMI Receiver	Peak	1MHz	1MHz

This report shall not be reproduced except in full, without the written approval of SEC EMC Testing laboratory.

1.7 Test Configuration

Used EUT and Peripherals

Seq	Device	Model Name	Serial #	Maker	Note
A	LBP	KT35MPB	-	Samsung	E.U.T
B	Note PC	PP03L	1D166A02	DELL	DoC
C	AC Adapter	ADP-90FB	06G356	DELTA	-
D	DVD-ROM Drive	-	CN-00J105-70161 -231-A077	DELL	DoC
E	USB FDD Drive	MSFD-20U	20001111	SANYO MOTOR	DoC
F	Serial Mouse	SERIAL MOUSE	0988578	Microsoft	FCC ID : C3KMS1

Used Cable Description

	Connect Cable	Length [m]	Shielded [Y/N]	Remark
1	Power	1.7	N	For EUT
2	Power	1.8	N	For Note PC
3	LAN	1.7	N	RJ45
4	USB	1.8	Y	-
5	Parallel	1.7	Y	-
6	USB	0.6	Y	-
7	USB	0.6	Y	-
8	Serial	1.8	Y	-

This report shall not be reproduced except in full, without the written approval of SEC EMC Testing laboratory.

Block Diagram

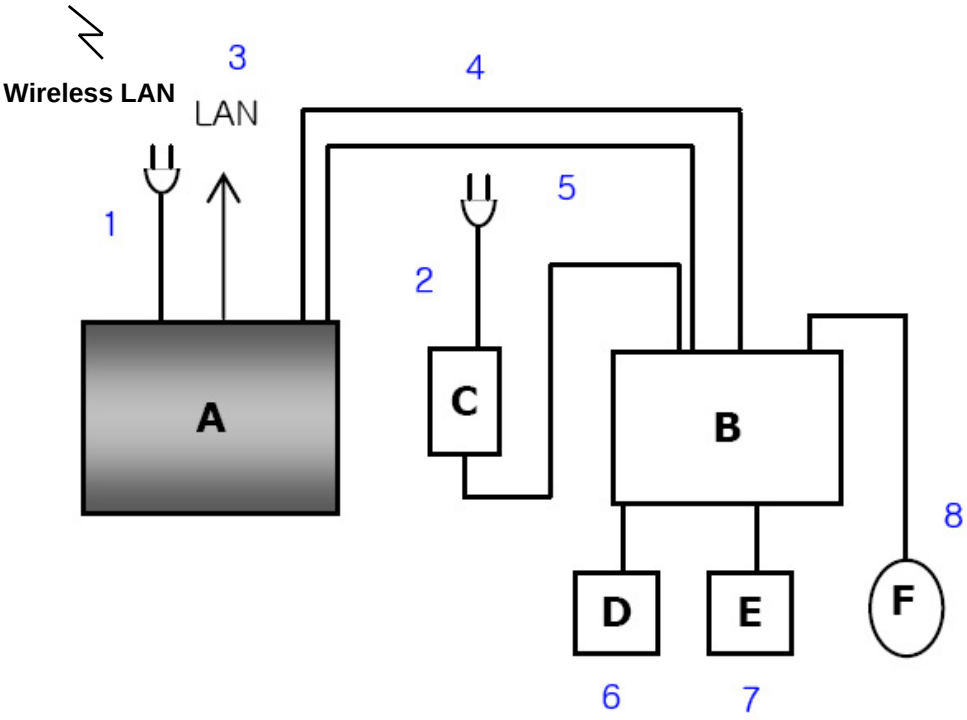

This report shall not be reproduced except in full, without the written approval of SEC EMC Testing laboratory.

1.8 Applied Standards

List

Product or Generic Standards	Basic Standards
FCC Part15 B	ANSI C63.4 : 2003

1.9 Test Facility

General Information

The sites are constructed in conformance with the requirements of ANSI C63.4 and CISPR 22, 16-1, 16-2.

This EMC Testing Lab. is accredited by Korea Laboratory Accreditation Scheme(KOLAS) which signed the International Laboratory Accreditation Cooperation (ILAC) Mutual Recognition Arrangement(MRA) for the above test item(s) and test method(s).

This Lab. is operated as testing laboratory in accordance with the requirements of ISO/IEC 17025:1998.

Accreditation and Listing

Uncertainty (According to NAMAS Pub.NIS81)

Samsung IT EMC Test Lab.

Conducted Emission		**:** ±1.9dB
Radiated Emission	Bi-Log Antenna	**:** ±5.1dB

This report shall not be reproduced except in full, without the written approval of SEC EMC Testing laboratory.

2. Summary of Test Results

Result : PASS

The equipment under test(EUT) has been found to comply with the applied standards.

Section of the Product Standard		Applied Standard	Result
Electromagnetic Emission Test			
3.1	Conducted Emission	ANSI C63.4 : 2003	Complied
3.2	Radiated Emission	ANSI C63.4 : 2003	Complied

This report shall not be reproduced except in full, without the written approval of SEC EMC Testing laboratory.

3.1 Conducted Emission

Test Information	
Test Engineer	Kyeong Dong, Kim
Test Date	May 16, 2005
Climate Condition	Ambient Temperature : 26.0 ℃ Relative Humidity : 33% Atmospheric Pressure 1014mbar
Test Place	Shield Room #2

Test Equipments

Equipment	Model Name	Manufacturer	Serial No.	Calibration	
				Next Date	Interval
EMI TEST RECEIVER	ESCS30	R&S	830986/004	2006-02-17	12
LISN	ESH3-Z5	R&S	100263	2005-05-25	12
LISN	ESH3-Z5	R&S	831887/004	2005-08-31	12

Measurement Results	**Passed** The Measured emissions of the EUT have found to be below the specified limits.

This report shall not be reproduced except in full, without the written approval of SEC EMC Testing laboratory.

Test Data & Graph

The Initial step in collecting conducted data was to perform a peak and average scan over the measurement range using a receiver

The find data represents worst-case emissions.

* QP : Quasi-peak, AV: Average

* Result = Meter Reading(QP or AV) + Total Loss(LISN Insertion loss + Cable loss)

* Margin = Limit – Result

1. TEST DATA & GRAPH

1.1 Quasi Peak

MEASUREMENT RESULT: "KT35MPB_fin QP"

Frequency	Level	Transd	Limit	Margin	Line	PE
MHz	dBµV	dB	dBµV	dB		
8.425000	44.8	1.1	60.0	15.2	L1	GND
9.025000	46.4	1.2	60.0	13.6	L1	GND
9.030000	45.1	1.2	60.0	14.9	L1	GND
9.040000	39.9	1.2	60.0	20.1	N	GND
9.105000	30.5	1.2	60.0	29.5	L1	GND
9.160000	41.3	1.2	60.0	18.7	N	GND
9.370000	32.9	1.1	60.0	27.1	N	GND
9.530000	32.7	1.1	60.0	27.3	N	GND
10.130000	31.2	1.0	60.0	28.8	N	GND
10.135000	28.9	1.0	60.0	31.1	L1	GND

This report shall not be reproduced except in full, without the written approval of SEC EMC Testing laboratory.

1.2 Average

MEASUREMENT RESULT: "KT35MPB_fin AV"

Frequency	Level	Transd	Limit	Margin	Line	PE
MHz	dBµV	dB	dBµV	dB		
8.470000	22.1	1.1	50.0	27.9	N	GND
8.890000	24.3	1.2	50.0	25.7	N	GND
9.010000	25.1	1.2	50.0	24.9	N	GND
9.130000	27.2	1.2	50.0	22.8	L1	GND
9.250000	28.0	1.1	50.0	22.0	L1	GND
9.970000	31.2	1.0	50.0	18.8	N	GND
10.030000	31.6	1.0	50.0	18.4	N	GND
10.210000	34.5	1.0	50.0	15.5	N	GND
10.270000	35.3	1.0	50.0	14.7	N	GND

- Graph -

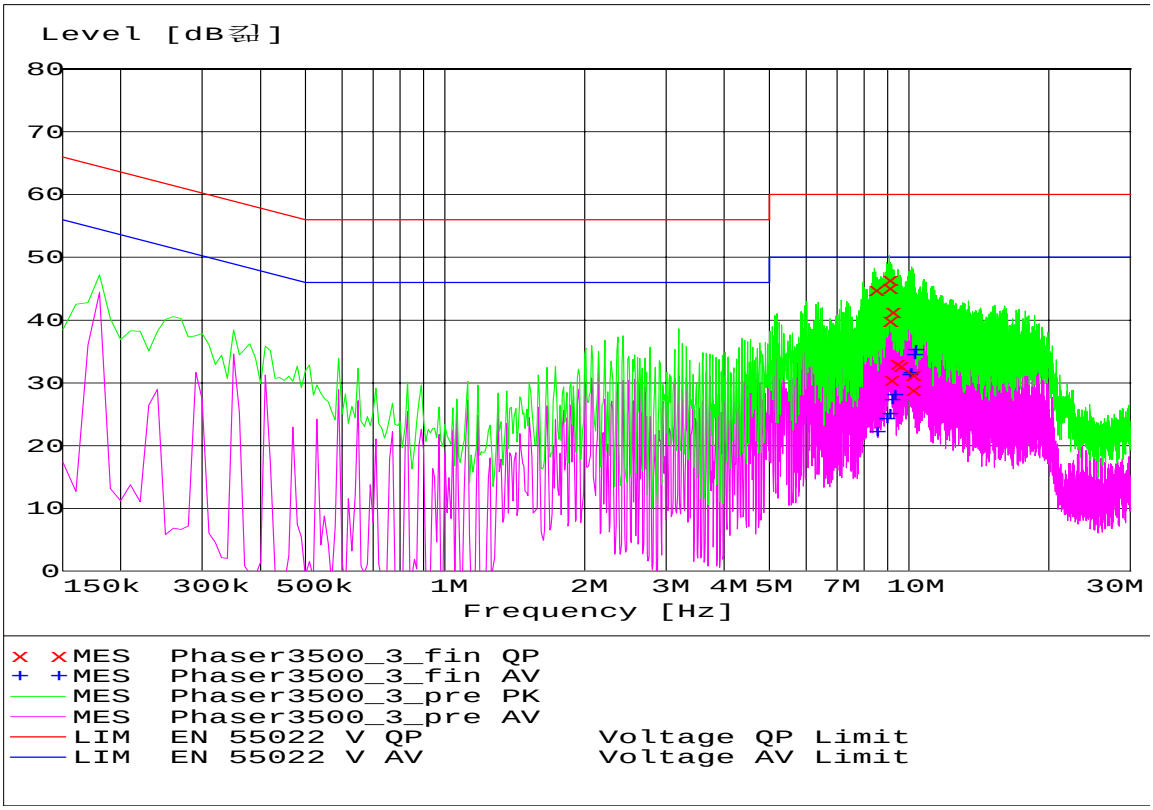

This report shall not be reproduced except in full, without the written approval of SEC EMC Testing laboratory.

3.2 Radiated Emission

Test Information	
Test Engineer	Kyeong Dong, Kim
Test Date	May 6, 2005
Climate Condition	Ambient Temperature : 20.5℃ Relative Humidity : 49% Atmospheric Pressure 1008mbar
Test Place	10m Semi Anechoic Chamber

Test Equipments

Equipment	Model Name	Manufacturer	Serial No.	Calibration	
				Next Date	Interval
Test Receiver	ESIB-26	R&S	100147	2005-10-04	12
Turn Table	DT430	HD	430/691/01	N/A	N/A
Antenna Mast	MA240	HD	240/678 BJ:01	N/A	N/A
Controller	HD100	HD	100/723	N/A	N/A
Preamplifier	CPA9232	Schaffner	1053	2005-08-14	12
BILOG Antenna	CBL6112B	Schaffner	2804	2005-11-09	12

Measurement Results	**Passed** No Operation errors were detected during or after the applied test.

This report shall not be reproduced except in full, without the written approval of SEC EMC Testing laboratory.

Test Data & Graph

The initial step in collecting radiated data was to perform a peak scan over the measurement range using a receiver. All modes of operation were investigated and the worst-case emission are reported. The minimum margin to the limit is as follows:

All other emission are non-significant.

* Receiving Antenna Mode : Horizontal, Vertical

* Test distance : 10m (Semi-Anechoic Chamber)

* Result = Meter Reading + Total Loss(Antenna factor + Cable loss-Amp. Gain)

* Margin = Limit – Result

Samsung Electronics Co., Ltd
IT Center

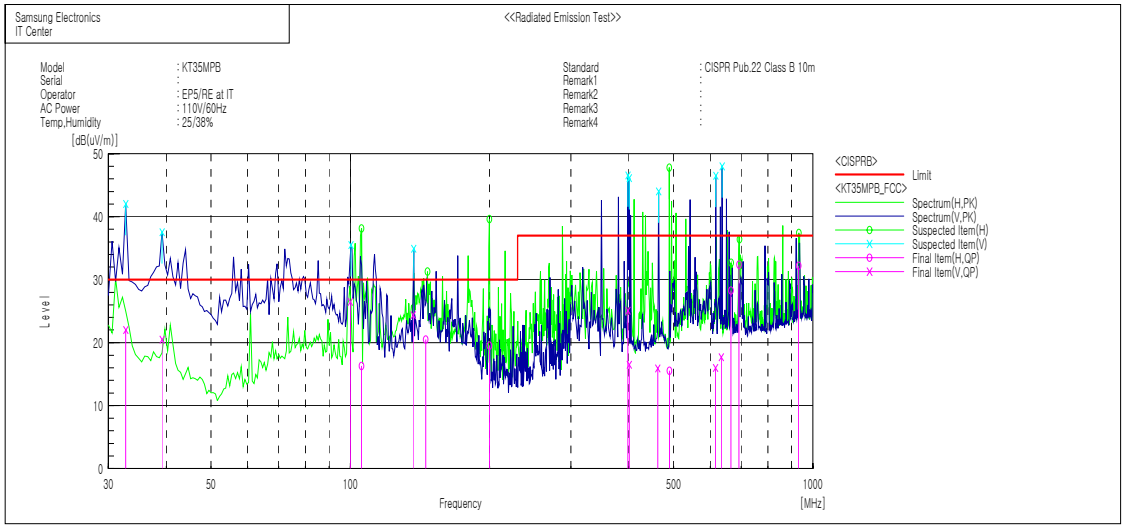

Final Result

No.	Frequency [MHz]	(P)	S.C	Reading QP [dB(uV)]	c.f [dB(1/m)]	Result QP [dB(uV/m)]	Limit [dB(uV/m)]	Margin QP [dB]	Height [cm]	Angle [deg]	Remark
1	32.705	V	S	24.8	-2.8	22.0	30.0	8.0	100.0	113.0	
2	39.198	V	S	27.0	-6.5	20.5	30.0	9.5	200.0	291.0	
3	100.021	V	S	35.9	-9.4	26.5	30.0	3.5	109.0	112.0	
4	105.752	H	S	24.9	-8.6	16.3	30.0	13.7	300.0	17.0	
5	136.823	V	S	32.5	-8.1	24.4	30.0	5.6	145.0	305.0	
6	145.605	H	S	29.1	-8.6	20.5	30.0	9.5	368.0	184.0	
7	199.900	H	S	29.7	-10.2	19.5	30.0	10.5	400.0	204.0	
8	398.196	V	S	27.3	-2.2	25.1	37.0	11.9	100.0	308.0	
9	401.002	V	S	18.6	-2.1	16.5	37.0	20.5	400.0	3.0	
10	461.989	V	S	16.7	-0.8	15.9	37.0	21.1	388.0	4.0	
11	489.919	H	S	15.9	-0.4	15.5	37.0	21.5	130.0	94.0	
12	615.694	V	S	13.9	2.1	16.0	37.0	21.0	211.0	215.0	
13	634.240	V	S	15.2	2.5	17.7	37.0	19.3	146.0	359.0	
14	665.536	H	S	25.3	3.0	28.3	37.0	8.7	312.0	192.0	
15	692.512	H	S	29.1	3.3	32.4	37.0	4.6	103.0	170.0	
16	931.901	H	S	25.0	7.2	32.2	37.0	4.8	100.0	157.0	

This report shall not be reproduced except in full, without the written approval of SEC EMC Testing laboratory.

■ **Test Data (1GHz~2GHz)**

MEASUREMENT RESULT: "KT35MPB_red PK"

Frequency	Level	Height	Azimuth	Polarisation
MHz	dBµV/m	cm	deg	
1001.000000	31.82	100.0	270.00	VERTICAL
1101.000000	33.03	100.0	150.00	VERTICAL
1156.000000	32.13	100.0	150.00	HORIZONTAL
1401.000000	35.04	100.0	150.00	VERTICAL
1602.000000	35.73	100.0	150.00	HORIZONTAL

This report shall not be reproduced except in full, without the written approval of SEC EMC Testing laboratory.

4. Appendix

4.1 Test Photography

Picture 1. Conducted Emission (Front)

Picture 2. Conducted Emission (Rear)

This report shall not be reproduced except in full, without the written approval of SEC EMC Testing laboratory.

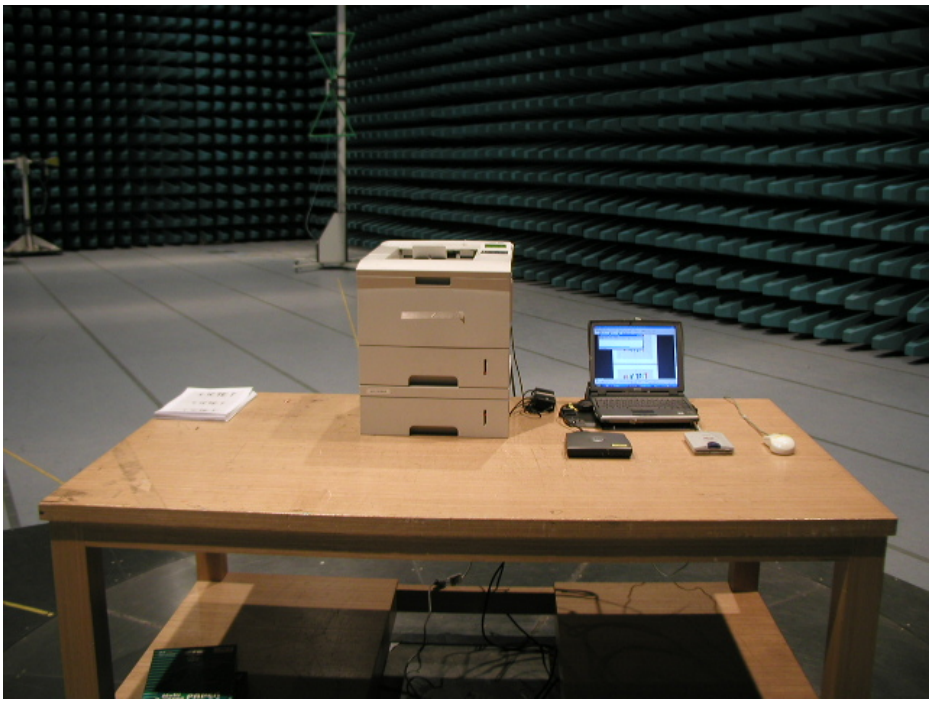

Picture 3. Radiated Emission (Front)

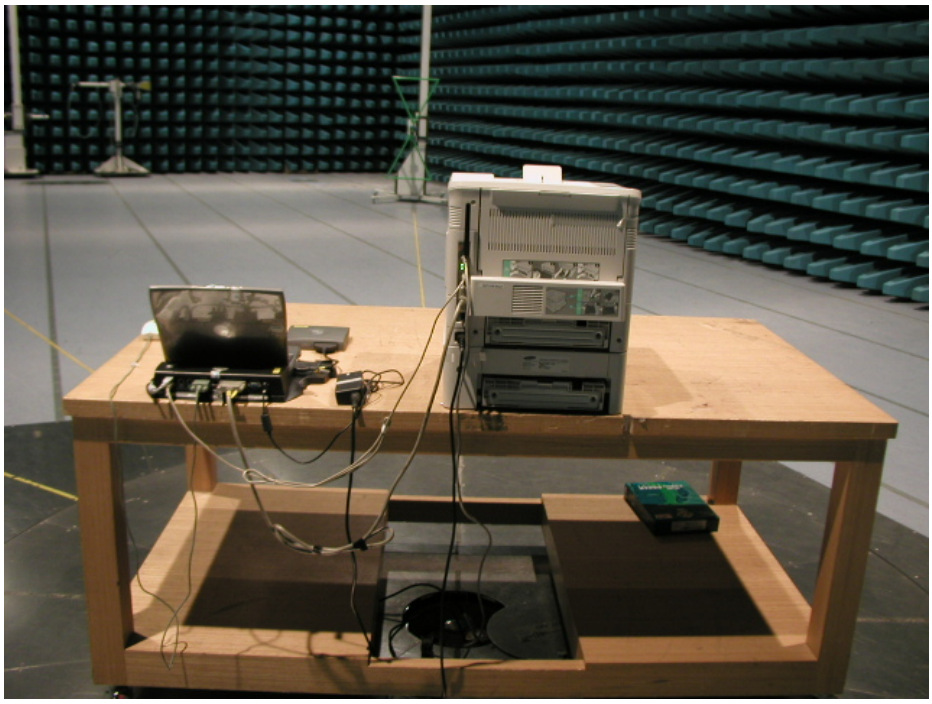

Picture 4. Radiated Emission (Rear)

This report shall not be reproduced except in full, without the written approval of SEC EMC Testing laboratory.

4.2 EUT Photography

Picture 5. EUT (Front)

Picture 6. EUT (Front Open)

This report shall not be reproduced except in full, without the written approval of SEC EMC Testing laboratory.

Picture 7. EUT (Rear) & Label Location

SAMSUNG

Samsung Electronics Co., Ltd.
Suwon, Korea, 443-742
Place:M259

ENERGY STAR

Serial No.:

Model: ML-3560
Type No.: KT35MPB
Voltz: AC 110-127V
Hertz: 50/60Hz
Amps: 6.5A
Manufactured: MARCH 2005

c UL us LISTED 51Y7 E149091 I.T.E

FCC ID: A3LKT35MPB (Printer)
FCC ID: A3LSWL-3500M (WLAN)
This device complies with part 15 of the FCC Rules.
Operation is subject to the following two conditions:
i) This device may not cause harmful interference, and
ii) This device must accept any interference received, including interference that may cause undesired operation.
This Class B digital apparatus meets all requirements of the Canadian interference-Causing Equipment Regulations.
Cet appareil numérique de la class B respecte toutes les exigences du Règlement sur le matériel brouilleur du Canada.
Canadian Certification Number(RSS-210)
This Class B digital apparatus complies with Canadian ICES-003
Cet appareil numérique de la classe B est conforme à la norme NMB-003 du Canada.
This product complies with 21 CFR Chapter 1, subchapter J.
MADE IN KOREA REV05

Picture 8. Label of Samsung Electronics Co., Ltd. (KT35MPB)

XEROX

Xerox Corporation
El Segundo, California
Made in Korea
Manufactured: MARCH 2005

Phaser™ 3500
Volts : 110-127V~
Hertz: 50/60Hz
Amps: 6.5A

This product complies with FDA radiation performance standard, 21 CFR sub-chapter J.
Part 1010 + 1040
PLACE:M259

FCC ID: A3LKT35MPB (Printer)
This device complies with part 15 of the FCC Rules.
Operation is subject to the following two conditions:
i) This device may not cause harmful interference, and
ii) This device must accept any interference received, including interference that may cause undesired operation.
This Class B digital apparatus complies with Canadian ICES-003
Cet appareil numérique de la classe "B" est conforme à la norme NMB-003 du Canada.

c UL us **LISTED 51Y7 E149091 I.T.E.**

ENERGY STAR

REV.03 (2)

Picture 9. Label of Xerox (Phaser 3500)