This manual is provided for information purposes only. All information included herein is subject to change without notice. Samsung Electronics is not responsible for any changes, direct or indirect, arising from or related to use of this manual.

© 2005 Samsung Electronics Co., Ltd. All rights reserved.

- ML-3560, ML-3561N, ML-3561ND, ML-3562W, and Samsung logo are trademarks of Samsung Electronics Co., Ltd.
- Centronics is a trademark of Centronics Data Computer Corporation.
- IBM and IBM PC are trademarks of International Business Machines Corporation.
- PCL and PCL 6 are trademarks of Hewlett-Packard company.
- Microsoft, Windows, Windows 9x, Windows Me, Windows 2000, Windows NT 4.0, and Windows XP are registered trademarks of Microsoft Corporation.
- PostScript 3 is a trademark of Adobe System, Inc.
- UFST® and MicroType™ are registered trademarks of Agfa division of Bayer Corp.
- TrueType, LaserWriter, and Macintosh are trademarks of Apple Computer, Inc.
- All other brand or product names are trademarks of their respective companies or organizations.

1. Introduction

Special Features 1.1
Printer Features 1.2
Printer Components 1.3
Front View 1.3
Rear View 1.3

2. Setting Up Your Printer

Unpacking 2.1
Selecting a Location 2.2
Installing the Toner Cartridge 2.2
Loading Paper 2.4
Changing the Size of the Paper in the Paper Tray 2.5
Connecting a Printer Cable 2.6
For Local Printing 2.6
For Network Printing 2.6
Turning the Printer On 2.7
Printing a Demo Page 2.7
Changing the Display Language 2.8
Using the Toner Save Mode 2.8
Using the Control Panel Button 2.8
Using the Control Panel Menu 2.8
From the Software Application 2.8
Installing Printer Software 2.8

3. Using the Control Panel

Understanding the Control Panel 3.1
Display 3.1
Buttons 3.2
Using Control Panel Menus 3.3
Accessing Control Panel Menus 3.3
Overview of Control Panel Menus 3.3
Information Menu 3.4
Paper Menu 3.4
Layout Menu 3.5
Graphics Menu 3.6
Printer Menu 3.7
Setup Menu 3.7
PCL Menu 3.8
PostScript Menu 3.9
EPSON/IBM Menu 3.9
Network Menu 3.9

4. Using Print Materials

Choosing Paper and Other Materials 4.1
Sizes and Capacities 4.1
Guidelines for Paper and Special Materials 4.1
Loading Paper 4.2
Using the Standard Tray or the Optional Tray 4.2
Using the Multi-purpose Tray 4.2
Using the Manual Feed Mode 4.4
Selecting an Output Location 4.5
Printing to the Top Output Tray (Face down) 4.5
Printing to the Rear Output Tray (Face up) 4.5
Printing on Special Print Materials 4.6
Printing on Envelopes 4.6
Printing on Labels 4.7
Printing on Transparencies 4.8
Printing on Preprinted Paper 4.8
Printing on Card Stock or Custom-sized Materials 4.9

5. Basic Printing

Printing a Document 5.1
Canceling a Print Job 5.1

6. Maintaining Your Printer

Printing Information Pages 6.1
- Printing a Configuration Page 6.1
- Printing Event Log Page 6.1
- Printing Usage Page 6.1

Maintaining the Toner Cartridge 6.2
- Checking the Toner Remains 6.2
- Redistributing Toner 6.2
- Replacing the Toner Cartridge 6.3

Replacing Transfer Roller 6.5
Replacing Pickup Roller 6.6
Replacing Pickup Pad 6.7
Replacing Fuser Roller 6.8
Cleaning the Printer 6.9
- Cleaning the Outside of the Printer 6.9
- Cleaning the Inside of the Printer 6.9

Consumables and Replacement Parts 6.10

7. Solving Problems

Troubleshooting Checklist 7.1
Solving General Printing Problems 7.2
Clearing Paper Jams 7.4
- In the Paper Feed Area 7.4
- Around the Toner Cartridge 7.6
- In the Paper Exit Area 7.7
- In the Duplex Area 7.7
- Tips for Avoiding Paper Jams 7.8

Solving Print Quality Problems 7.8
Understanding Display Messages 7.10
Common Windows Problems 7.12
Common Macintosh Problems 7.12
Common PS Problems 7.13
Common Linux Problems 7.13

8. Using Your Printer on a Network

About Sharing the Printer on a Network 8.1
Setting Up a Network-Connected Printer 8.1
- Configuring Network Parameters on the Control Panel 8.1

9. Installing Printer Options

Precautions When Installing Printer Options 9.1
Installing Memory DIMM 9.1
- Removing the Memory DIMM 9.3

Installing a Network Card or Serial Interface Card 9.3
Using the Hard Disk 9.5
- Installing the Hard Disk 9.5
- Printing with the Optional Hard Disk 9.6

Installing an Optional Paper Tray 9.8
Installing a Duplex Unit 9.9
- Printing on Both Sides of Paper 9.10

10. Specifications

Printer Specifications 10.1
Paper Specifications 10.2
Overview 10.2
Supported Sizes of Paper 10.2
Guidelines for Using Paper 10.3
Paper Specifications 10.4
Paper Output Capacity 10.4
Printer and Paper Storage Environment 10.4
Envelopes 10.4
Labels 10.5
Transparencies 10.5

Environmental and Safety Consideration

Laser Safety Statement

The printer is certified in the U.S. to conform to the requirements of DHHS 21 CFR, chapter 1 Subchapter J for Class I(1) laser products, and elsewhere, is certified as a Class I laser product conforming to the requirements of IEC 825.

Class I laser products are not considered to be hazardous. The laser system and printer are designed so there is never any human access to laser radiation above a Class I level during normal operation, user maintenance, or prescribed service condition.

WARNING
Never operate or service the printer with the protective cover removed from Laser/Scanner assembly. The reflected beam, although invisible, can damage your eyes.
When using this product, these basic safety precautions should always be followed to reduce risk of fire, electric shock, and injury to persons:

CAUTION - CLASS 3B LASER RADIATION WHEN OPEN AVOID EXPOSURE TO THE BEAM.

DANGER - LASER RADIATION AVOID DIRECT EXPOSURE TO BEAM.

DANGER - RADIATIONS INVISIBLES DU LASER EN CAS D'OUVERTURE. EVITER TOUTE EXPOSITION DIRECTE AU FAISCEAU.

VORSICHT - UNSICHTBARE LASERSTRAHLUNG, WENN ABDECKUNG GEÖFFNET. NICHT DEM STRAHL AUSSETZEN.

ATTENZIONE - RADIAZIONE LASER INVISIBILE IN CASO DI APERTURA. EVITARE L'ESPOSIZIONE AL FASCIO.

PRECAUCIÓN - RADIACIÓN LASER INVISIBLE CUANDO SE ABRE. EVITAR EXPONERSE AL RAYO.

PERIGO - RADIAÇÃO LASER INVISÍVEL AO ABRIR. EVITE EXPOSIÇÃO DIRECTA AO FEIXE.

GEVAAR - ONZICHTBARE LASERSTRALEN BIJ GEOPENDE KLEP. DEZE KLEP NIET OPENEN.

ADVARSEL - USYNLIG LASERSTRÅLNING VED ÅBNING. UNDGÅ UDSAETTELSE FOR STRÅLNING.

ADVARSEL. - USYNLIG LASERSTRÅLNING NÅR DEKSEL ÅPNES. UNNGÅ EKSPONERING FOR STRÅLEN.

VARNING - OSYNLIG LASERSTRÅLNING NÄR DENNA DEL ÄR ÖPPEN. STRÅLEN ÄR FARLIG.

VAROITUS - NÄKYMÄTÖNTÄ LASERSÄTEILYÄ AVATTAESSA. VARO SUORAA ALTISTUMISTA SÄTEELLE.

注 意 - 严禁揭开此盖, 以免激光泄露灼伤

주 의 - 이 덮개를 열면 레이저광에 노출될 수 있으므로 주의하십시오.

Ozone Safety

During normal operation, this machine produces ozone. The ozone produced does not present a hazard to the operator. However, it is advisable that the machine be operated in a well ventilated area.

If you need additional information about ozone, please contact your nearest Samsung dealer.

Power Saver

This printer contains advanced energy conservation technology that reduces power consumption when it is not in active use.

When the printer does not receive data for an extended period of time, power consumption is automatically lowered.

The energy star emblem does not represent EPA endorsement of any product or service.

Recycling

Please recycle or dispose of the packaging material for this product in an environmentally responsible manner.

Radio Frequency Emissions

FCC regulations

This device has been tested and found to comply with the limits for a Class B digital device, pursuant to Part 15 of the FCC rules. These limits are designed to provide reasonable protection against harmful interference in a residential installation. This equipment generates, uses and can radiate radio frequency energy and, if not installed and used in accordance with the instructions, may cause harmful interference to radio communications. However, there is no guarantee that interference will not occur in a particular installation. If this equipment does cause harmful interference to radio or television reception, which can be determined by turning the equipment off and on, the user is encouraged to try to correct the interference by one or more of the following measures:

Reposition the receiving antenna.

Increase the separation between the equipment and receiver.

Connect the equipment into an outlet on a circuit different from that to which the receiver is connected.

Consult the dealer or an experienced radio/TV technician for help.

CAUTION: Changes or modifications not expressly approved by the manufacturer responsible for compliance could void the user's authority to operate the equipment.

Canadian Radio Interference Regulations

This digital apparatus does not exceed the Class B limits for radio noise emissions from digital apparatus as set out in the interference-causing equipment standard entitled "Digital Apparatus", ICES-003 of the Industry and Science Canada.

Cet appareil numérique respecte les limites de bruits radioélectriques applicables aux appareils numériques de Classe B prescrites dans la norme sur le matériel brouilleur: "Appareils Numériques", ICES-003 édictée par l'Industrie et Sciences Canada.

United States of America

Federal Communications Commission (FCC)

Intentional emitter per FCC Part 15

Low power, Radio LAN type devices (radio frequency (RF) wireless communication devices), operating in the 2.4 GHz Band, may be present (embedded) in your printer system. This section is only applicable if these devices are present. Refer to the system label to verify the presence of wireless devices.

Wireless devices that may be in your system are only qualified for use in the United States of America if an FCC ID number is on the system label.

The FCC has set a general guideline of 20 cm (8 inches) separation between the device and the body, for use of a wireless device near the body (this does not include extremities). This device should be used more than 20 cm (8 inches) from the body when wireless devices are on. The power output of the wireless device (or devices), which may be embedded in your printer, is well below the RF exposure limits as set by the FCC.

This transmitter must not be collocated or operation in conjunction with any other antenna or transmitter.

Operation of this device is subject to the following two conditions:(1) This device may not cause harmful interference, and(2) this device must accept any interference received, including interference that may cause undesired operation of the device.

Wireless devices are not user serviceable. Do not modify them in any way. Modification to a wireless device will void the authorization to use it. Contact manufacturer for service.

FCC Statement for Wireless LAN use:

"While installing and operating this transmitter and antenna combination the radio frequency exposure limit of 1mW/cm2 may be exceeded at distances close to the antenna installed. Therefore, the user must maintain a minimum distance of 20cm from the antenna at all times. This device can not be colocated with another transmitter and transmitting antenna."

Declaration of Conformity (European Countries)

Approvals and Certifications

The CE marking applied to this product symbolises Samsung Electronics Co., Ltd. Declaration of Conformity with the following applicable 93/68/EEC Directives of the European Union as of the dates indicated:

January 1, 1995: Council Directive 73/23/EEC Approximation of the laws of the member states related to low voltage equipment.

January 1, 1996: Council Directive 89/336/EEC (92/31/EEC), approximation of the laws of the Member States related to electromagnetic compatibility.

March 9, 1999: Council Directive 1999/5/EC on radio equipment and telecommunications terminal equipment and the mutual recognition of their conformity.

A full declaration, defining the relevant Directives and referenced standards can be obtained from your Samsung Electronics Co., Ltd. representative.

EC Certification

Certification to 1999/5/EC Radio Equipment & Telecommunications Terminal Equipment Directive (FAX)

This Samsung product has been self-certified by Samsung for pan-European single terminal connection to the analogue public switched telephone network (PSTN) in accordance with Directive 1999/5/EC. The product has been designed to work with the national PSTNs and compatible PBXs of the European countries:

In the event of problems, you should contact the Euro QA Lab of Samsung Electronics Co., Ltd. in the first instance.

The product has been tested against TBR21 and/or TBR 38. To assist in the use and application of terminal equipment which complies with this standard, the European Telecommunication Standards Institute (ETSI) has issued an advisory document (EG 201 121) which contains notes and additional requirements to ensure network compatibility of TBR21 terminals. The product has been designed against, and is fully compliant with, all of the relevant advisory notes contained in this document.

European Radio Approval Information (for products fitted with EU-approved radio devices)

This Product is a printer; low power, Radio LAN type devices (radio frequency (RF) wireless communication devices), operating in the 2.4 GHz band, may be present (embedded) in your printer system which is intended for home or office use. This section is only applicable if these devices are present. Refer to the system label to verify the presence of wireless devices.

Wireless devices that may be in your system are only qualified for use in the European Union or associated areas if a CE mark with CE a Notified Body Registration Number and the Alert Symbol is on the system label.

The power output of the wireless device or devices that may be embedded in you printer is well below the RF exposure limits as set by the European Commission through the R&TTE directive.

European States qualified under wireless approvals:

EU	Austria, Belgium, Denmark, Finland, France (with frequency restrictions), Germany, Greece, Ireland, Italy, Luxembourg, The Netherlands, Portugal, Spain, Sweden and the United
Accept EU	Iceland, Liechtenstein, Norway and Switzerland

European States with restrictions on use:

EU	In France, the frequency range is restricted to 2446.5-2483.5 MHz for devices above 10 mW transmitting power such as wireless
Accept EU	No limitations at this time.

Regulatory Compliance Statements

Wireless Guidance

Low power, Radio LAN type devices (radio frequency (RF) wireless communication devices), operating in the 2.4 GHz Band, may be present (embedded) in your printer system. The following section is a general overview of considerations while operating a wireless device.

Additional limitations, cautions, and concerns for specific countries are listed in the specific country sections (or country group sections). The wireless devices in your system are only qualified for use in the countries identified by the Radio Approval Marks on the system rating label. If the country you will be using the wireless device in, is not listed, please contact your local Radio Approval agency for requirements. Wireless devices are closely regulated and use may not be allowed.

The power output of the wireless device or devices that may be embedded in your printer is well below the RF exposure limits as known at this time. Because the wireless devices (which may be embedded into your printer) emit less energy than is allowed in radio frequency safety standards and recommendations, manufacturer believes these devices are safe for use. Regardless of the power levels, care should be taken to minimize human contact during normal operation.

As a general guideline, a separation of 20 cm (8 inches) between the wireless device and the body, for use of a wireless device near the body (this does not include extremities) is typical. This device should be used more than 20 cm (8 inches) from the body when wireless devices are on and transmitting.

This transmitter must not be collocated or operation in conjunction with any other antenna or transmitter.

Some circumstances require restrictions on wireless devices. Examples of common restrictions are listed below:

Radio frequency wireless communication can interfere with equipment on commercial aircraft. Current aviation regulations require wireless devices to be turned off while traveling in an airplane. 802.11B (also known as wireless Ethernet) and Bluetooth communication devices are examples of devices that provide wireless communication.

In environments where the risk of interference to other devices or services is harmful or perceived as harmful, the option to use a wireless device may be restricted or eliminated. Airports, Hospitals, and Oxygen or flammable gas laden atmospheres are limited examples where use of wireless devices may be restricted or eliminated. When in environments where you are uncertain of the sanction to use wireless devices, ask the applicable authority for authorization prior to use or turning on the wireless device.

Every country has different restrictions on the use of wireless devices. Since your system is equipped with a wireless device, when traveling between countries with your system, check with the local Radio Approval authorities prior to any move or trip for any restrictions on the use of a wireless device in the destination country.

If your system came equipped with an internal embedded wireless device, do not operate the wireless device unless all covers and shields are in place and the system is fully assembled.

Wireless devices are not user serviceable. Do not modify them in any way. Modification to a wireless device will void the authorization to use it. Please contact manufacturer for service.

Only use drivers approved for the country in which the device will be used. See the manufacturer System Restoration Kit, or contact manufacturer Technical Support for additional information.

SAMSUNG ELECTRONICS

EU Declaration of Conformity (RTTE)

We, Samsung Electronics Co, Ltd.

of #259, GongDan-Dong,Gumi-Shi, GyungBuk, KOREA 730-030
(factory name, address)

declare under our sole responsibility th

Temporary

Laser Beam Printer
model "ML-2150, ML-215

to which this declaration relates is in conformity with

RTTE Directive 1999/5/EC (Annex Ⅱ)
Low Voltage Directive 73/23/EEC
EMC Directive 89/336/EEC:92/31/EEC

By application of the following standards

RTTE : ETSI EN 300 328, , ETSI EN 301 489

LVD : EN 60950:1992 +A1+A2+A3+A4+A11

EMC : EN55022:1998,EN61000-3-2:1995+A1+A2:1998,EN61000-3-3:1995,EN55024:1998

(Manufacturer)

Samsung Electronics co.,ltd
#259,KongDan-Dong,GuMi-City
KyungBuk, Korea 730-030

2003-03-17

(place and date of issue)

Whan-Soon Yim / Senior Manager

(name and signature of authorized person)

(Representative in the EU)

Samsung Electronics Euro QA Lab.
Blackbushe Business Park
Saxony Way, Yateley, Hampshire
GU46 6GG, UK

2003-03-17

(place and date of issue)

In-Seop Lee / Manager

(name and signature of authorized person)

WARNING

- Do not disassemble the printer. Doing so may give you an electric shock.
- If you continuously print many pages, the surface of the output tray may become hot. Be careful not to touch the surface, especially for children.

1 Introduction

Congratulations on the purchase of your printer!

This chapter includes:

- **Special Features**
- **Printer Components**

Special Features

Your new printer is equipped with several special features that improve the print quality. You can:

Print with excellent quality and high speed

- You can print up to **1200 x 1200 dpi** effective output. For details, see the **Software User's Guide**.
- Your printer prints A4-sized paper at **33 ppm** and letter-sized paper at **35 ppm**.

Handle paper flexibly

- The **Multi-purpose Tray** supports letterheads, envelopes, labels, transparencies, custom-sized materials, postcards, and heavy paper. The **Multi-purpose Tray** also supports up to 100 sheets of plain paper.
- **Standard 500-sheet input tray** (Tray1) and **optional 500-sheet input tray** (Tray2) supports all standard sizes of paper.
- Two output tray; select either **the top output (face-down)** or **the rear output tray (face-up)** for the most convenient access.
- **Straight-through paper path** capability from the Multi-purpose Tray to the rear output tray.

Create professional documents

- Print **Watermarks**. You can customize your documents with a watermark, such as the word "Confidential." For details, see the **Software User's Guide**.
- Print **Booklets**. This feature enables you to easily print a document to create a book. Once printed, all you have to do is fold and staple the pages. For details, see the **Software User's Guide**.
- Print **Posters**. The text and pictures of each page of your document can be magnified and printed across several sheets of paper and taped together to form a poster. For details, see the **Software User's Guide**.

Save time and money

- This printer allows you to use the **Toner Save** mode to save toner. For details, see page 2.8.
- You can print on both sides of the paper to save paper (**double-sided printing**) if you install an optional duplex unit. For details, see page 9.9.
- You can print multiple pages on a single sheet of paper to save paper (**N-Up printing**). For details, see the **Software User's Guide**.
- You can use preprinted forms and letterhead. For details, see the **Software User's Guide**.
- This printer automatically **conserves electricity** by substantially reducing power consumption when not printing.
- This printer meets **Energy Star** guidelines for energy efficiency.

Expand the printer capacity

- This printer has 32 MB of memory which can be expanded to **288 MB**. For details, see page 9.1.
- An optional **Serial interface** card allows you to use the serial connection.
- A **Network interface** enables network printing. You can add an optional network interface card to the ML-3560.

  The ML-3561N, ML-3561ND and ML-3562W come with a built-in network interface, 10/100 Base TX. The ML-3562W also has a wireless network interface.

  You can also use an optional wireless network interface in both the ML-3560, ML-3561N and ML-3561ND.
- Your printer comes with a built-in **PostScript 3 Emulation*** (PS) DIMM which enables PS printing.

* PostScript 3 Emulation

•© Copyright 1995-2003, Zoran Corporation. All rights reserved. Zoran, the Zoran logo, IPS/PS3 and OneImage are trademarks of zoran Corporation.

* 136 PS3 fonts

- Contains UFST and MicroType from Agfa Monotype Corporation.

Use the optional hard disk

If you install an optional hard disk, you can use it in various ways with your printer. For details, see page 9.5.

- The hard disk allows the data from your computer to be sent to the print queue of the printer hard disk. This decreases the workload of the computer.
- You can use various print features, such as storing a job in the hard disk and printing jobs anytime you want.
- You can print or delete the stored files in the hard disk.
- You can manage the print jobs in the print queue of the printer hard disk.

Print in various environments

- You can print in **Windows 95/98/Me/NT 4.0/2000/XP/2003**.
- Your printer is compatible with **Linux** and **Macintosh**.
- Your printer comes with both the **Parallel** and **USB** interfaces.
- You can also use a **network interface**. The ML-3561N, ML-3561ND and ML-3562W come with a built-in network interface, 10/100 Base TX. The ML-3562W also has a wireless network interface.

  However, you need to install the optional network interface card to the ML-3560. You can also install the optional wireless network interface in both the ML-3560, ML-3561N and ML-3561ND.

Printer Features

The table below lists a general overview of features supported by your printer.
(S: Standard, O: Option)

Features	ML-3560	ML-3561N	ML-3561ND	ML-3562W
IEEE 1284	S	S	S	S
USB 2.0	S	S	S	S
Network Interface	O	S	S	S
Wireless LAN	O	O	O	S
PostScript Emulation	S	S	S	S
Serial Interface	O	O	O	O
Hard Disk	O	O	O	O
Duplex Unit	O	O	S	O
Optional Paper Tray	O	O	O	O

Printer Components

Front View

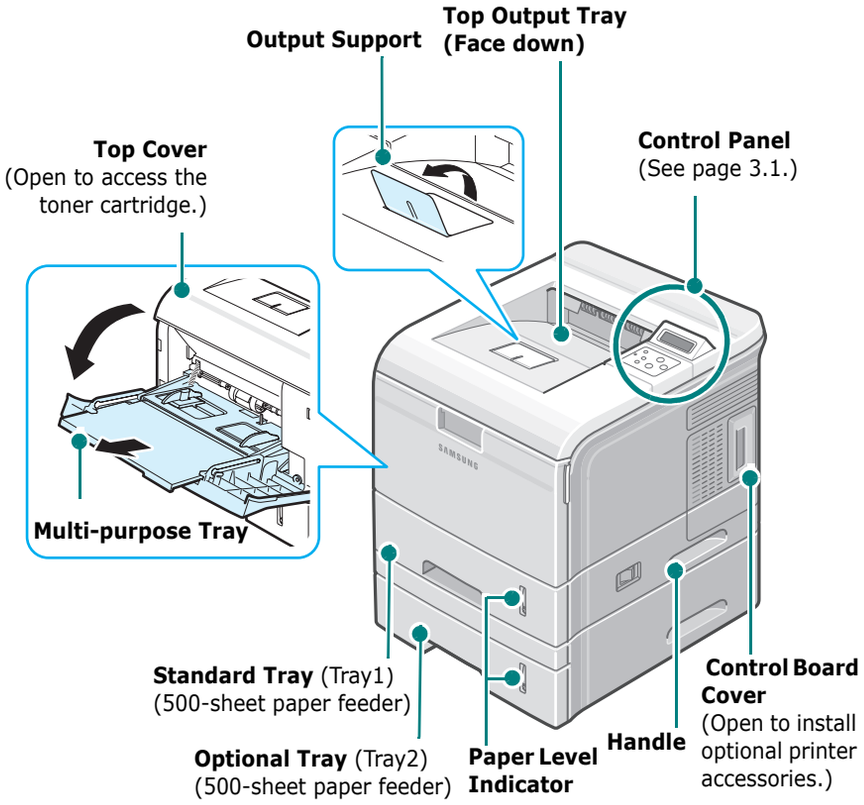

* The figure above shows an ML-3561N.

Rear View

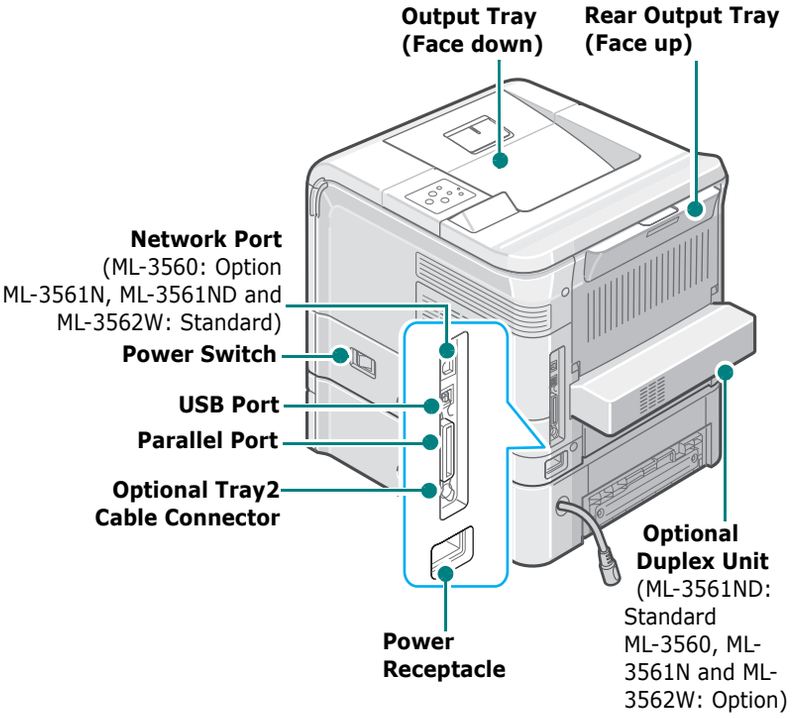

* The figure above shows an ML-3561N.

2 Setting Up Your Printer

This chapter provides step by step information on setting up your printer.

This chapter includes:

- **Unpacking**
- **Installing the Toner Cartridge**
- **Loading Paper**
- **Connecting a Printer Cable**
- **Turning the Printer On**
- **Printing a Demo Page**
- **Changing the Display Language**
- **Using the Toner Save Mode**
- **Installing Printer Software**

Unpacking

1 Remove the printer and all accessories from the packing carton. Make sure that the printer has been packed with the following items:

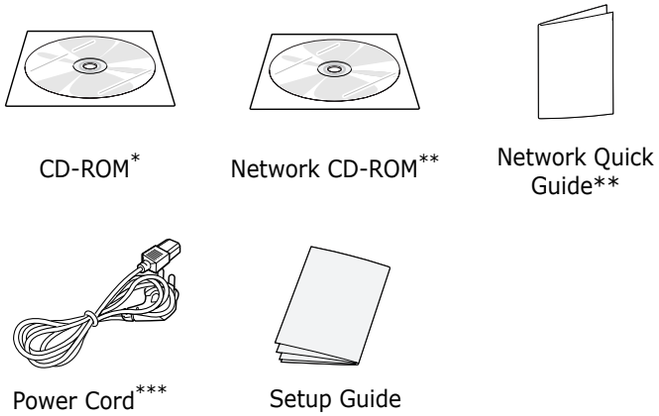

* The CD-ROM contains the printer driver, the User's Guide, and the Adobe Acrobat Reader programme.
**The Network CD-ROM and Network Quick Guide are only for ML-3561N, ML-3561ND and ML-3562W.
***The appearance of the power cord may differ depending on your country's specifications.

NOTES:
- If any items are missing or damaged, notify your dealer immediately.
- **Components may differ from one country to another.**

CAUTION: The printer weights 17kg including the toner cartridge and the tray. Use safe lifting and handling techniques. If you need to move the printer, it should be moved by two people. Use the lifting handles as shown in the diagram (see page 1.3). Back injury could result if a single person attempts to lift the printer.

2 Carefully remove all of the packing tape from the printer.

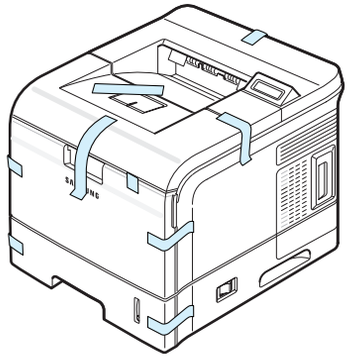

3 Pull the paper tray out of the printer and remove the packing tape and the packing material inside of the tray.

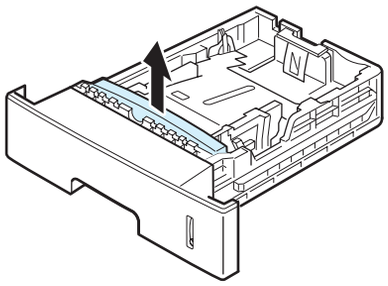

Selecting a Location

Select a level, stable place with adequate space for air circulation. Allow extra space for opening covers and trays.

The area should be well-ventilated and away from direct sunlight or sources of heat, cold, and humidity. Do not set the printer close to the edge of your desk or table.

Clearance Space

Front: 482.6 mm (enough space so that trays can be opened or removed)

Back: 320 mm (enough space to allow opening of the rear output tray)

Right: 100 mm (enough space for ventilation)

Left: 100 mm (enough space for ventilation)

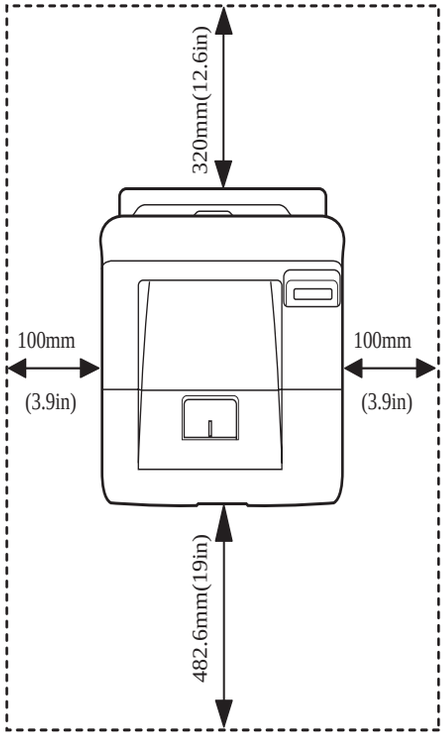

Installing the Toner Cartridge

1 Open the top cover. Pull up on the handle to open the cover.

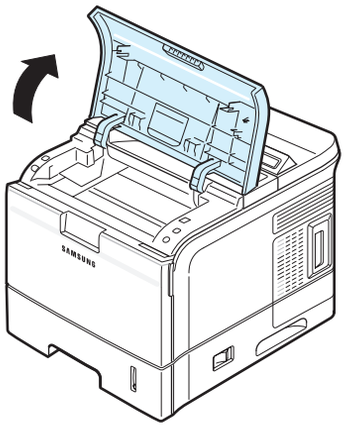

2 Remove the starter toner cartridge from its bag.

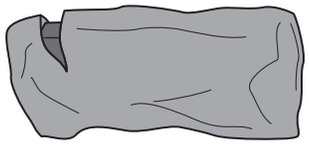

CAUTION: Do not use sharp objects, such as a knife or scissors, to open the toner cartridge package. They might scratch the drum of the cartridge.

3 Locate the sealing tape at the end of the toner cartridge. Carefully pull the tape completely out of the cartridge and discard it.

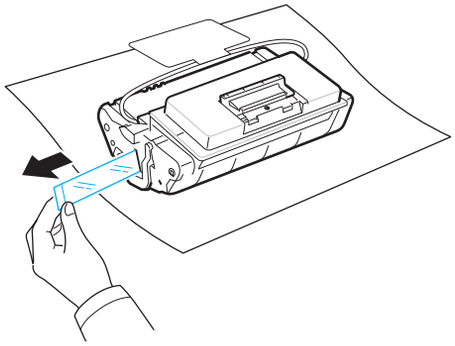

NOTES:

- The sealing tape should be longer than 600 mm when correctly removed.
- Holding the toner cartridge, pull the sealing tape straight to remove it from the cartridge. Be careful not to cut the tape. If this happens, you cannot use the toner cartridge.

4 Hold the toner cartridge and lift up the handle part of the toner cartridge. There is a flexible plastic holder. Remove the holder out of the toner cartridge.

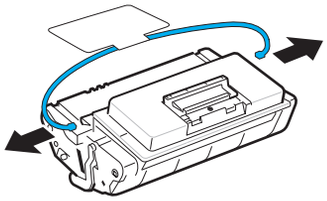

5 Gently shake the cartridge from side to side to distribute the toner evenly inside the cartridge.

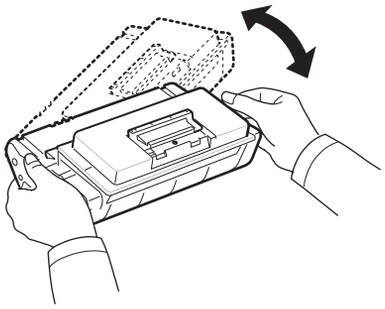

Thoroughly shaking the cartridge will assure maximum copies per cartridge.

CAUTIONS:

- If toner gets on your clothing, wipe it off with a dry cloth and wash clothing in cold water. Hot water sets toner into fabric.
- Do not touch the green surface, the OPC drum, on the front of the toner cartridge with your hands or any other material.
- To prevent damage, do not expose the toner cartridge to light for more than a few minutes. Cover it with a piece of paper to protect it, if necessary.

6 Locate the cartridge slots inside the printer, one on each side.

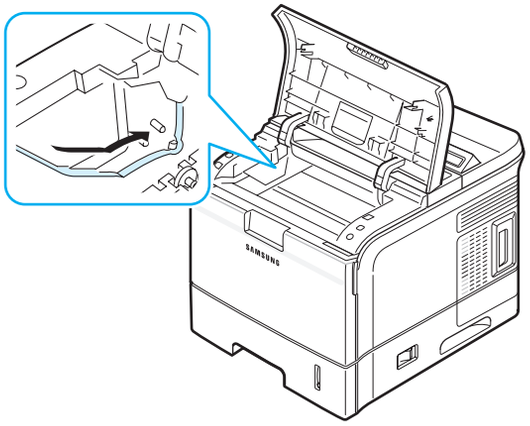

7 Grasp the handle and insert the cartridge in the printer until it snaps into place.

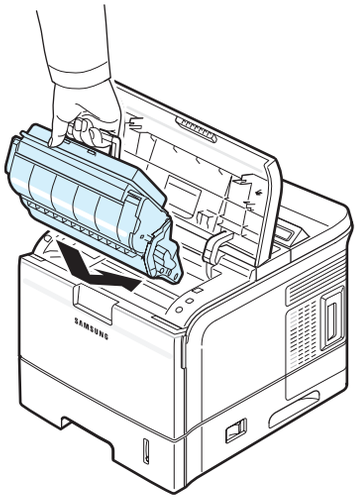

8 Close the top cover. Make sure that the cover is securely closed.

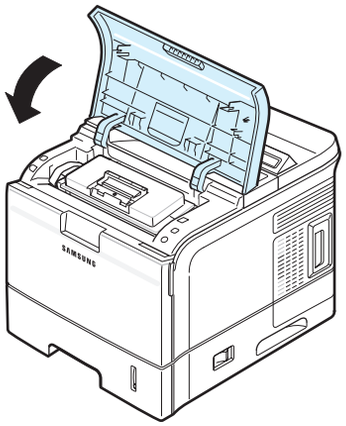

NOTE: When printing text at 5% coverage, you can expect a toner cartridge life of approximately 12,000 pages (6,000 pages for the toner cartridge that is shipped with the printer).

Loading Paper

The paper tray can hold a maximum of 500 sheets of 20lb plain paper.

To load a stack of A4 or Letter-sized paper:

1 Pull open the paper tray and remove it from the printer.

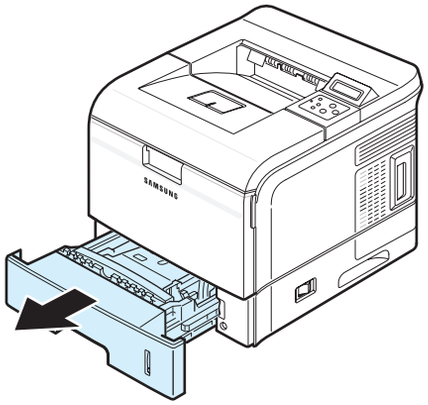

2 Pull down the metal plate until it locks into position.

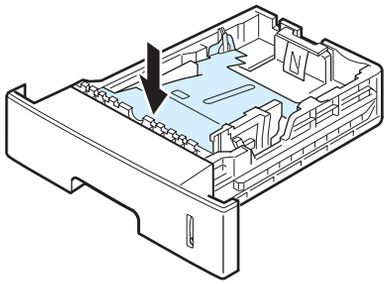

3 Squeeze the paper width guide and slide it to the desired paper size marked at the bottom of the tray.

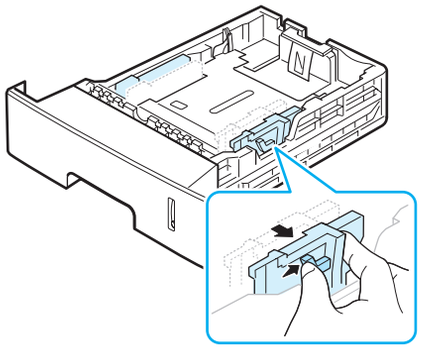

4 Fan the edges of the paper stack to separate the pages. Then tap the stack on a flat surface to even it up.

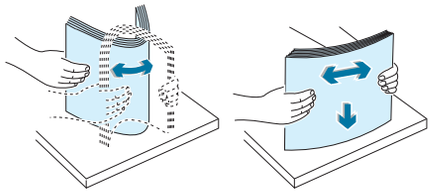

5 Insert the paper stack into the paper tray **with the print side down**.

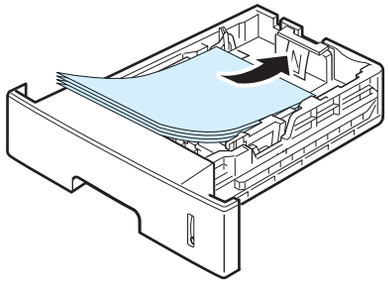

You can load previously printed paper. The printed side should be facing up with an uncurled edge at the top side. If you experience problems with paper feed, turn the paper around.

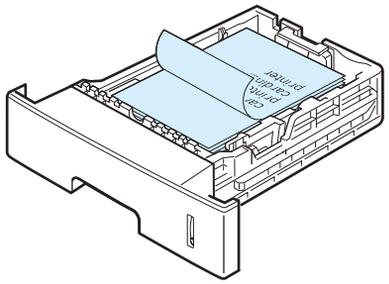

NOTE: If you want load a different sized paper, you need to adjust the paper guides. For details, see page 2.5.

6 Make sure not to overfill the tray and that all four corners are flat in the tray and under the paper length guide bracket, as shown below. Overfilling the tray may cause a paper jam.

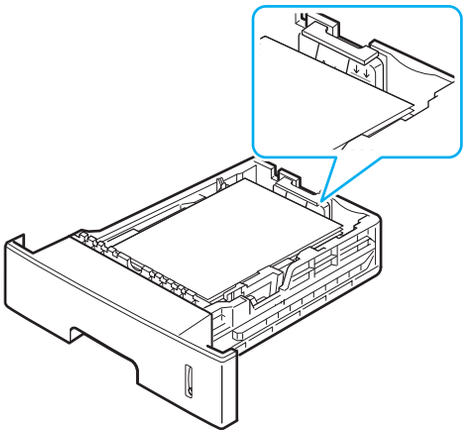

7 Insert and slide the paper tray back into the printer.

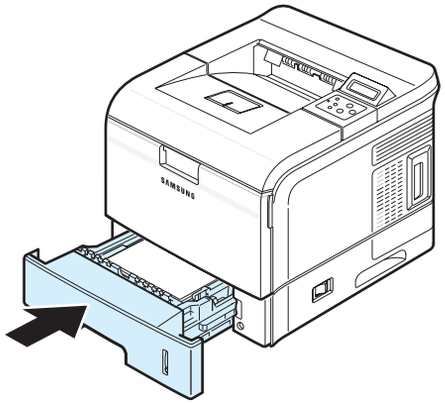

Changing the Size of the Paper in the Paper Tray

The tray is preset to Letter or A4 size, depending on your country. To change the size, you need to adjust the paper guides.

1 Push the back plate of the tray outwards completely so that it can extend the length of the tray.

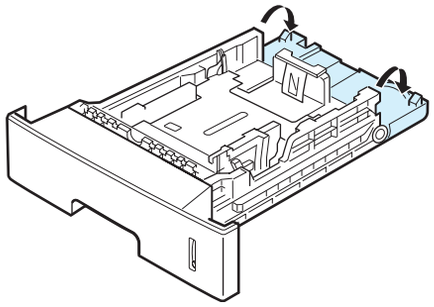

2 Squeeze the paper length guide and slide it to the correct position for the paper size you are loading, which is marked at the bottom of the tray.

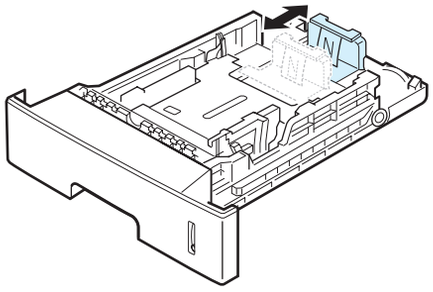

3 Squeeze the paper width guide and slide it to the desired paper size marked at the bottom of the tray.

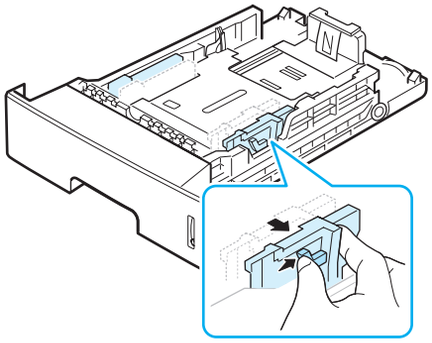

NOTES:

- Do not push the paper width guide far enough to cause the material to warp.
- If you do not adjust the paper width guide, it may cause paper jams.

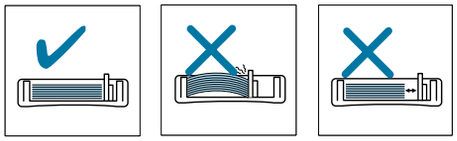

4 Load paper with the print side down. For details, see from step 5 on page 2.4.

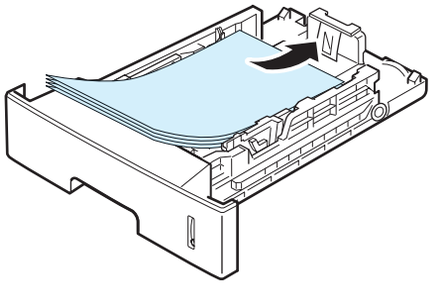

Connecting a Printer Cable

For Local Printing

To print from your computer in a local environment, you need to connect your printer to the computer with either a parallel interface cable or a Universal Serial Bus (USB) cable.

If you are a Macintosh user, you can use only the USB cable.

NOTE: You only need to connect one of the cables mentioned above. Do not use the parallel cable and USB cables at the same time.

Using a Parallel Cable

NOTE: Connecting the printer to the parallel port of the computer requires a certified parallel cable. You will need to buy a IEEE1284 compliant cable that is 3 m or less in length.

1. Make sure that both the printer and the computer are turned off.
2. Connect a parallel printer cable into the parallel connector on the back of the printer.

   Push the metal clips down to fit inside the notches on the cable plug.

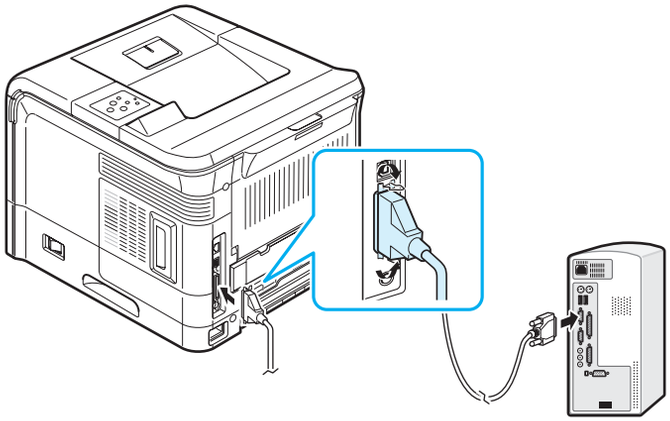

3. Connect the other end of the cable to the parallel interface port on your computer, and tighten the screws.

   See your computer's User's Guide, if you need help.

Using a USB Cable

NOTE: Connecting the printer to the USB port of the computer requires a certified USB cable. You will need to buy a USB 2.0 compliant cable that is within 3 m in length.

1. Make sure that both the printer and the computer are turned off.
2. Connect a USB printer cable into the USB connector on the back of the printer.

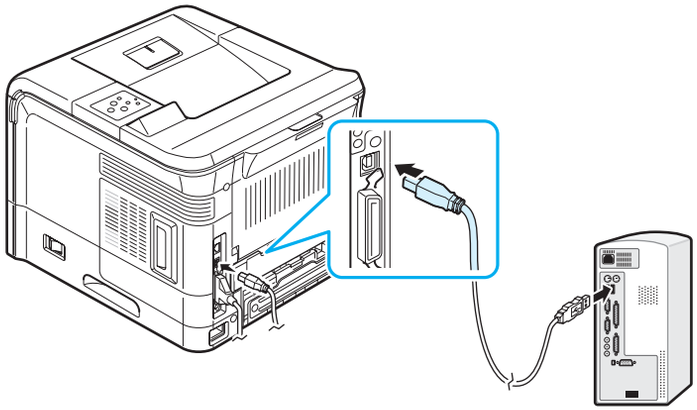

3. Connect the other end of the cable to the USB port on your computer.

   See your computer's User's Guide, if you need help.

NOTE: To print using the USB interface, you must be running Windows 98/Me/2000/XP/2003 or Macintosh with the OS 9.x and G3 processor or OS 10.2.x later.

For Network Printing

You can attach your printers to a network using an Ethernet cable (UTP cable with RJ.45 connector).

The ML-3561N, ML-3561ND and ML-3562W come with a built-in network interface card. The ML-3562W also has a network antenna which allows you to use wireless LAN interface.

If you are a ML-3560 user, you need to install an optional network interface card.

If you want to use the printer in both wired and wireless network environments, you need to install an optional wired and wireless network card to the ML-3560. For the ML-3561N, ML-3561ND you can replace the network interface card to one supporting the wired and wireless LAN interface.

For details about installing the network interface card, see page 9.3.

Using an Ethernet Cable

1 Connect one end of the Ethernet cable into the Ethernet network port on the printer.

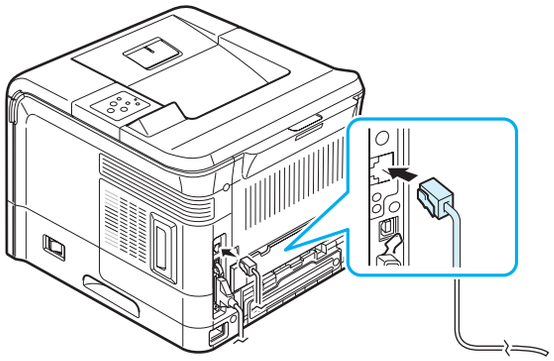

2 Connect the other end of the cable into a network LAN connection.

See your computer's User's Guide, if you need help.

Using a Network Antenna

If you install a wired and wireless network card, you can use your printer in a wireless environment by using a network antenna.

For the ML-3560, ML-3561N, ML-3561ND you need to install an optional wired and wireless network card. For details about installing the wired and wireless network card, see page 9.3.

NOTE: After connecting the printer, you need to configure the network parameters on the control panel. See page 8.1. You can use the software supplied with the card. Refer to the software User's Guide.

Turning the Printer On

1 Connect one end of the supplied power cord into the power receptacle on the back of the printer.

2 Connect the other end into a properly grounded AC outlet and turn on the printer using the power switch.

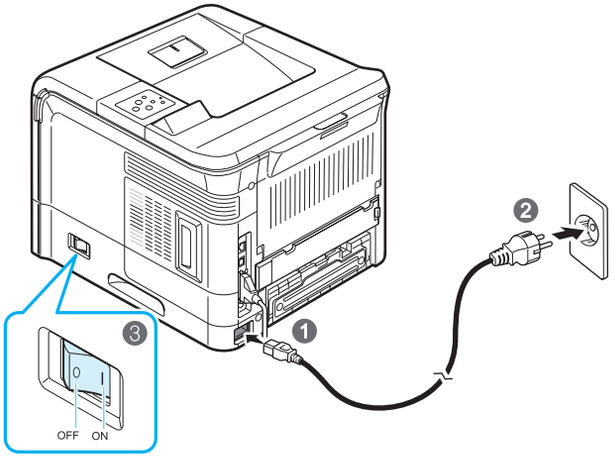

To view your display text in another language, see page 2.8.

CAUTIONS:

- The fuser area inside the rear output tray of your printer becomes very hot when in use. Take care not to burn your fingers when you access this area.
- Do not disassemble the printer with power on. If you do, you may receive an electric shock.

Printing a Demo Page

Print a demo page to make sure that the printer is operating correctly.

1 In ready mode, press the **Menu** button ( ) on the control panel. You can see "Information" on the bottom line of the display.

2 Press the **Enter** button ( ) to access the menu.

3 Press the scroll button (or) until you see "Demo Page" on the bottom line.

4 Press the **Enter** button ( ).

A demo page prints out.

Changing the Display Language

To change the language that is displayed on the control panel, follow these steps:

1. In ready mode, press the **Menu** button ( ) on the control panel until you see "Setup" on the bottom line of the display.
2. Press the **Enter** button ( ) to access the menu.
3. Press the scroll button (or) until you see "LCD Language" on the bottom line.
4. Press the **Enter** button ( ) to confirm the menu item.
5. Press the scroll button (or) to display the language you want to use.
6. Press the **Enter** button ( ) to save the selection.
7. Press the **On Line/Continue** button ( ) to return to ready mode.

Using the Toner Save Mode

The Toner Save mode allows the printer to use less toner on each page. Activating this mode extends the life of your toner cartridge and reduces your cost per page beyond what one would experience in the normal mode, but it reduces print quality. This setting is not available with the 1200 dpi setting.

There are three ways to enable the Toner Save mode:

Using the Control Panel Button

Press the **Toner Save** button ( ) on the control panel. The printer must be in ready mode; the **On Line/Continue** button ( ) is on in green and "Ready" is shown on the display.

- If the **Toner Save** button backlight is on, the mode is enabled and the printer uses less toner to print a page.
- If the **Toner Save** button backlight is off, the mode is disabled and the printer prints in normal mode.

Using the Control Panel Menu

You can set the **Toner Save** item in the **Graphics** menu to turn the Toner Save mode on or off.

For further details about using the control panel menu, see page 3.3.

From the Software Application

You can set the Toner Save mode from the printer properties window on your printer driver. For details, see the **Software User's Guide**.

Installing Printer Software

You must install software using the supplied CD-ROM after you have set up your printer and connected it to your computer. For details, see the **Software User's Guide***.*

The CD-ROM provides you with the following software:

If you are printing from Windows

You can install the following printer software using the CD-ROM.

- **PCL printer driver** for Windows. Use this driver to take full advantage of your printer's features. See the **Software User's Guide** for details about installing the Samsung PCL printer driver.
- **PostScript Printer Description (PPD) file** for Windows to allow installation of the PostScript driver.

  To install the PostScript driver, you need to select **Custom** and put a check mark on the PostScript driver when you install the software. For details, see the **Software User's Guide**.
- **SmartPanel**. Appears when printing errors occur. See the **Software User's Guide** for details about installing the SmartPanel program.

If you are printing in Linux

You can print from a Linux-based computer with your printer. Go to the **Software User's Guide** for information about installing the Linux driver and printing from a Linux environment.

If you are printing from a Macintosh

You can print from a Macintosh with your printer. Go to the **Software User's Guide** for information about installing the print software and printing from a Macintosh.

3 Using the Control Panel

This chapter describes how to use the printer's control panel.

This chapter includes:

- **Understanding the Control Panel**
- **Using Control Panel Menus**

Understanding the Control Panel

The control panel on the top right side of your printer has the display and the eight buttons.

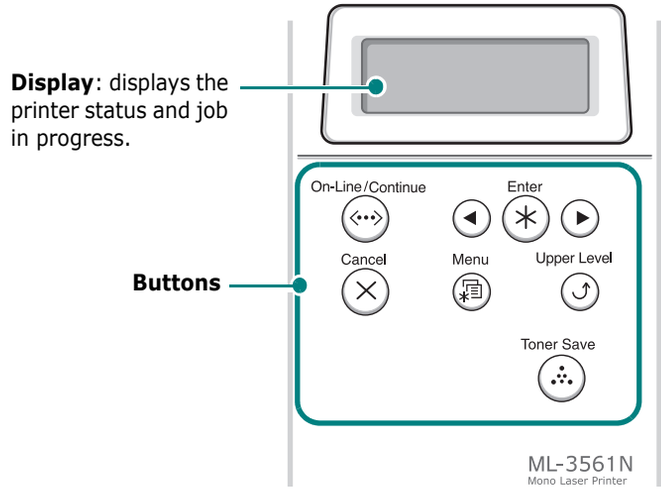

Display

Message	Description
Ready	• The printer is on-line and ready to print. • If you press the **On Line/Continue** button ( ), the printer goes to off-line.
Offline	• The printer is off-line and cannot print. • If you press the **On Line/Continue** button ( ), the printer switches to on-line.
Printing XXX * *xxx is the current emulation.*	• The printer is printing. • If you want to stop printing, press the **Cancel** button ( ).
Sleeping...	• The printer is in the Power Save mode, consuming less power. When a print job is received from the computer, or if any button is pressed, the printer switches to on-line. • To deactivate the Power Save mode or change the power-saving time, see page 3.7.

See "Understanding Display Messages" on page 7.10 for a complete listing of all printer messages.

Buttons

Button	Description		
On Line/ Continue	• Press to switch between on-line and off-line. • In menu mode, press to return to ready mode. You can check the printer status according to the button backlight.		
	Green	On	The printer is on-line and can receive data from the computer.
		Blinking	• When the backlight slowly blinks, the printer is receiving data from the computer. • When the backlight fast blinks, the printer is receiving and printing data. If you want to pause printing, switch the printer to off-line.
	Orange	On	The printer has stopped printing due to a major error. Check the display message. See page 7.10 for details on the meaning of the error message.
		Blinking	A minor error occurs and the printer is waiting an error to be cleared. Check the display message. When the problem is cleared, the printer resumes printing. If you want to ignore this warning, press this button.
	Off	• The printer is off-line and cannot print. • The printer is in the Power Save mode. When data is received, it switches to on-line automatically.	
Menu	• Press to enter menu mode. • In menu mode, press to scroll through the menus.		
Enter	In menu mode, press to select the displayed sub menu item or to confirm the changed setting. You can see the selected value marked with *.		

Button	Description
Scroll buttons	In menu mode, press to scroll through sub menu items or setting options. Pressing ▸ moves you to the next option and pressing ◂ sends you back to the previous option.
Cancel	• Press to cancel the current print job. • In menu mode, press to return to ready mode.
Upper Level	In menu mode, press to go back to the upper menu level.
Toner Save	Press to enable or disable the Toner Save mode. • If the button backlight is on, the mode is enabled and the printer uses less toner to print a document. • If the button backlight is off, the mode is disabled and the printer will print in the normal quality. For more information on the Toner Save mode, see page 2.8.

Using Control Panel Menus

A number of menus are available to make it easy for you to change printer settings. The diagram on next column shows the menus and all of the menu items available in each menu. The items in each menu and the values you can select are described in more detail in the tables beginning on page 3.4.

Accessing Control Panel Menus

You can control your printer from the printer's control panel. You can also set the control panel menus while the printer is in use.

1. In ready mode, press the **Menu** button ( ) until you see the menu you want on the bottom line of the display.
2. Press the **Enter** button ( ) to access the menu.
3. Press the scroll button (or) until the desired menu item displays on the bottom line.
4. Press the **Enter** button ( ) to confirm the selected item.
5. If the selected menu item has sub menus, repeat steps 3 and 4.
6. Press the scroll button (or) until the desired setting option displays on the bottom line, or enter the required value.
7. Press the **Enter** button ( ) to save your input or selection.

   An asterisk (*****) appears next to the selection on the display, indicating that it is now the default.
8. To exit the menu, press the **Upper Level** button ( ) repeatedly, or the **Cancel** button ( ).

   After 60 seconds of inactivity (no key being pressed), the printer automatically returns to ready mode.

NOTE: Print settings made from the printer driver on a connected computer override the settings on the control panel.

Overview of Control Panel Menus

The control panel menus are used to configure the printer. The control panel provides access to the following menus:

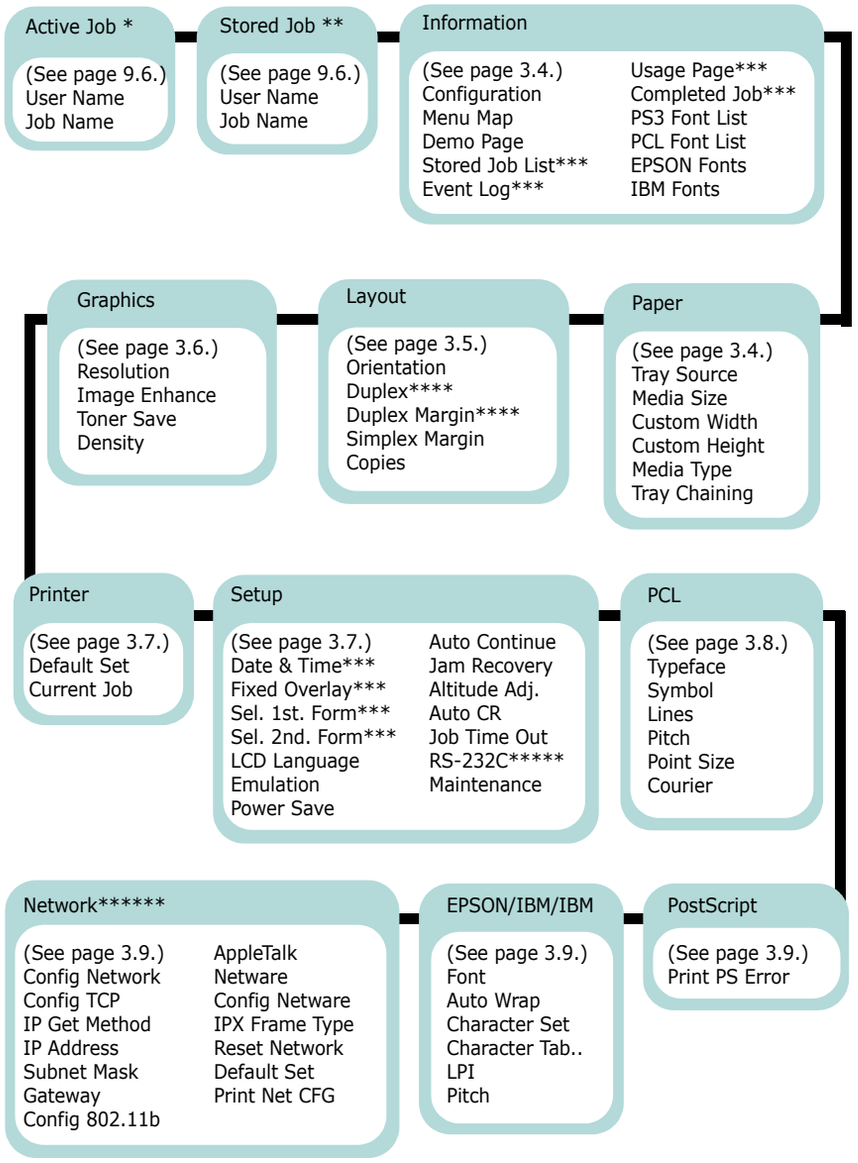

**:Available when your printer is printing a file from an optional hard disk.*
***: Available when there is a file stored in an optional hard disk.*
****: Available when your printer has an optional hard disk.*
*****: Available when an optional duplex unit is installed in your printer.*
******: Available when an optional serial interface card is installed in your printer.*
*******: Available when a network card is installed in your printer. (ML-3561N, ML-3561ND or ML-3562W, or ML-3560 with an optional network card)*

Information Menu

This menu contains printer information pages that give details about the printer and its configuration.

Item	Explanation
Configuration	The configuration page shows the printer's current configuration. See page 6.1.
Menu Map	The menu map shows the layout and current settings of the control panel menu items.
Demo Page	The demo page allows you to check if your printer properly performs printing.
Stored Job List	The list shows the file list stored in the optional hard disk.
Event Log	The Event Log page lists the errors occurring when you are using the printer. See page 6.1.
Usage Page	The Usage Page contains the total number of pages printed by person or group. This page can be used for cost accounting. See page 6.1.
Completed Job	The Completed Job page shows the list of completed print jobs. The list contains up to 50 files from the latest print jobs.
PS3 Font List PCL Font List EPSON Fonts IBM Fonts	The font sample list shows all of the fonts currently available in the selected language.

Paper Menu

Use this menu to define all settings relating to print material input and output, as well as the specific print material you are using with your printer.
(*: the default setting)

Item	Explanation
Tray Source	Values: Auto Select*, Tray1, MP Tray, Tray2 , Manual Tray Using this item, you can set the tray you will use. • If you select **Auto Select**, the printer can automatically determine the source. • Select **MP Tray** or **Manual Tray** to use the Multi-purpose Tray. If you select **Manual Tray**, you need to press the **On Line/ Continue** button each time you print a page. • The **Tray2** item is available only when the optional Tray2 is installed.
Media Size	Values: Letter, Legal, A4, Executive, JIS B5, ISO B5, No. 10 Env., Monarch Env., DL Env., C5 Env., C6 Env., US Folio, A5, A6, Custom , Oficio * Letter for USA, A4 for Europe and Asia Select the paper size currently loaded in the tray.
Custom Width	Values: A4:210 mm/ Letter:215 mm * Letter for USA, A4 for Europe and Asia Select the paper size currently loaded in the tray. This menu is shown when **Media Size** value is set up by **Custom Size**. • **Custom Width**: Set the custom width from 76 to 216 mm.
Custom Height	Values: A4:297 mm/ Letter:279 mm * Letter for USA, A4 for Europe and Asia Select the paper size currently loaded in the tray. This menu is shown when **Media Size** value is set up by **Custom Size**. • **Custom Height**: Set the custom height from 127 to 356 mm.

Item	Explanation
Media Type	Values: Off*, Plain Paper, Thick, Thin, Bond, Color Paper, Card Stock, Labels, Transparency, Envelope, Preprinted The Media Type setting lets you specify the type of print material you are using to get the best result. • **Plain Paper**: Select for plain paper. • **Thick**: Select for thick paper • **Thin**: Select for thin paper • **Bond**: Select for thick paper. • **Color Paper**: Select for colored paper. • **Card Stock**: Select for card stocks. • **Labels**: Select for labels. • **Transparency**: Select for transparencies. • **Envelope**: Select for envelops. • **Preprinted**: Preprinted is for paper with something else printed on it, such as letterhead.
Tray Chaining	Values: Off, On* When you select any other value except **Auto Select** from **Tray Source** and the selected tray is empty, the printer automatically prints from other trays. If this menu item is set to **Off**, the **On Line/Continue** button backlight blinks in orange and the printer doesn't work until you insert paper into the specified tray.

Layout Menu

Use the **Layout** menu to define all settings relating to output.
(*: the default setting)

Item	Explanation
Orientation	Values: Portrait*, Landscape Choose the default orientation of print image on the page. Portrait Landscape
Duplex	Values: Off*, Long Edge, Short Edge To print on both sides of paper, choose the binding edge as follows. • **Long Edge**: Flip on long edge. Prints pages to read like a book. • **Short Edge**: Flip on short edge. Prints pages to read by flipping over like a note pad. 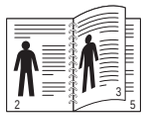 Long Edge in the Portrait orientation 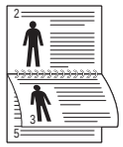 Long Edge in the Landscape orientation Short Edge in the Portrait orientation 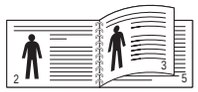 Short Edge in the Landscape orientation Select **Off** to print on one side of paper. **NOTE**: This menu item is available only when you install an optional duplex unit.

Item	Explanation
Duplex Margin	Values: Top/Left:5.0* , Short/Long: 0* In this menu, you can set the margin of print materials for double-sided printing. You can increase or decrease the value in 0.1 mm increments. • **Top Margin**: Set the top margin, from 0.0 to 9.9 mm. • **Left Margin**: Set the left margin, from 0.0 to 9.9 mm. • **Short Binding**: Set the bottom margin of the rear side for short binding, from 0.0 to 22 mm. • **Long Binding**: Set the right margin of the rear side for long binding, from 0.0 to 22 mm. **NOTE**: This menu item is available only when you install an optional duplex unit.
Simplex Margin	Values: 0.0* Set the margin of print materials for one-sided printing. You can increase or decrease the value in 0.1 mm increments. • **Top Margin**: Set the top margin, from 0.0 to 250 mm. • **Left Margin**: Set the left margin, from 0.0 to 164 mm.
Copies	Values: 1* ~ 999 Set the default number of copies by selecting any number from 1 to 999.

Graphics Menu

Use the **Graphics** menu to change settings affecting the quality of the printed characters and images.
(*: the default setting)

Item	Explanation
Resolution	Values: 300dpi-Draft, 600dpi-Normal*, 1200dpi-Best Specify the number of dots printed per inch (dpi). The higher the setting, the sharper the clarity of printed characters and graphics. • Select **300dpi-Draft** to print a draft document. • If your print jobs are mostly text, select **600dpi-Normal** for the highest quality output. • Select **1200dpi-Best** when your job contains bitmapped images, such as scanned photos or some business graphics, that will benefit from enhanced line screening.
Image Enhance	Values: Normal, Image Enhance, Text Enhance* This item enhances the print quality. • **Normal**: Doesn't enhance the quality. • **Image Enhance**: Enhances bitmap images, like scanned pictures. • **Text Enhance**: Enhances letters and simple figures.
Toner Save	Values: Off*, On To get the most from your toner supply, set this menu to **Off**. If you set this menu to **On**, print quality may be reduced.
Density	Values: Light, Medium*, Dark You can lighten or darken the print on the page by changing the toner density setting. The **Medium** setting usually produces the best result. Use the **Light** toner density setting to save toner.

Printer Menu

This menu allows you to reset the printer settings or cancel the current job.

Item	Explanation
Default Set	This menu item allows you to restore the printer's factory default settings.
Current Job	You can cancel the current print job and remove it from the printer buffer.

Setup Menu

Use the **Setup** menu to configure a variety of printer features.

(*: the default setting)

Item	Explanation
Date & Time Fixed Overlay Sel. 1st. Form Sel. 2nd. Form	For details, see "Using the Hard Disk" on page .5.
LCD Language	Values: English*, German, French, Italian, Spanish The LCD Language setting determines the language of the text that appears on the control panel display and information printing.
Emulation	Values: Auto*, PCL, HEXDUMP, EPSON, PS3, IBM ProPrint The printer language defines how the computer communicates with the printer. If you select **Auto**, your printer can change the printer language automatically.
Power Save	Values: Off, 5 Minutes*, 10 Minutes, 15 Minutes, 30 Minutes, 45 Minutes, 60 Minutes When the printer does not receive data for an extended period of time, power consumption is automatically lowered. You can set how long the printer waits before going to the power save state.

Item	Explanation
Auto Continue	Values: Off, On* This item determines whether or not the printer continues printing when it detects the paper unmatched to your paper setting. • **Off**: If the paper mismatch occurs, the message will remain on the display and the printer will remain off-line until you insert the correct paper. • **On**: If the paper mismatch occurs, an error message will display. The printer will go offline for 30 seconds and automatically clear the message and continue printing.
Jam Recovery	Values: Off*, On This item determines how the printer behaves when a paper jam occurs. • **Off**: The printer does not reprint pages. Printing performance might be increased with this setting. • **On**: The printer automatically reprints pages after you clear the paper jam.
Altitude Adj.	Values: Low*, High You can optimize print quality depending on the air pressure, such as in a high ground.
Auto CR	Values: LF*, LF+CR This item allows you to append the required carriage return to each line feed. Refer to the following samples: AA BB LF AA BB LF+CR
Job Time Out	Values: 0 ~ 1800 sec *15 sec You can set the time length the printer waits before printing the last page of a print job that does not end with a command to print the page. When a print time-out occurs, the printer prints the page in the print buffer.

Item	Explanation
RS-232C	This item is available only if the optional serial interface card is installed in your printer. For details, see page 9.3. • **BAUD Rate**: Lets you select the rate at which data is being sent to or from your computer using the serial communication. • **Robust XON**: Turns use of XON/OFF of serial communication control on or off. When this item is set to **On**, the printer sends a continuous stream of XONs to the computer to indicate that the serial port is ready to receive more data.
Maintenance	This item allows you to maintain the toner cartridge. • **OPC Cleaning**: Cleans the OPC drum of the cartridge and produces a cleaning sheet with toner debris on it. • **Fuser Cleaning**: Cleans the fuser unit inside of the printer and produces a cleaning sheet with toner debris on it. • **Remain Toner**: This item allows you to check how much toner are left in the cartridge.

PCL Menu

This menu sets the PCL emulation configuration. You can set the font type, symbol type, lines per page, and point size.
(*: the default setting)

Item	Explanation
Typeface	Values: PCL1* ~ PCL68 You can select the standard font to be used in PCL emulation. • PCL1~PCL7's interval between letters is fixed, and PCL8~PCL45's interval is proportional to the font type and point size. You can adjust the font size of PCL1~PCL7 using the **Pitch** item, and PCL8~PCL45 can do using **Point Size** item. • PCL46~PCL54's interval and point size are fixed.
Symbol	Values: ROMAN8 ~ PCCYRILLIC *PC8 This item selects the symbol to be used in PCL emulation. The symbol is the group of numbers, marks, and special signs being used when printing letters.
Lines	Values: 5 ~ 128 *60 (Letter), 64 (A4) This item allows you to set vertical spacing from 5 to 128 lines for the default paper size. The lines may differ according to the paper size and printing orientation.
Pitch	Values: 0.44 ~ 99.99 (0.01 unit) *10 When you select one between PCL1 and PCL7 from the **Typeface** menu, you can determine the font size by setting the number of characters that will print in one horizontal inch of type. The default value, 10 is the best size.
Point Size	Values: 4.00 ~ 999.75 (0.25 unit) *12 When you select one between PCL8 and PCL45 from the **Typeface** menu, you can determine the font size by setting the height of the characters in the font.
Courier	Values: Regular*, Dark This item lets you select the version of Courier font to use.

PostScript Menu

This menu provides you with the Print PS Error menu item.

(*: the default setting)

Item	Explanation
Print PS Error	Values: Off*, On You can select whether or not your printer prints an error list when a PS error occurs. • Select **On** to print PS 3 emulation errors. If an error occurs, the job stops processing, the error message prints, and the printer flushes the job. • If this menu is set to **Off**, the job is flushed without an indication of the error.

EPSON/IBM Menu

This menu sets the EPSON emulation configuration.
(*: the default setting)

Item	Explanation
Font	Values: SANSERIF*, ROMAN You can select the standard font will be used in EPSON emulation.
Auto Wrap	Values: On*, Off This item determines whether or not the printer automatically performs line feed when the data overflows the printable area of the print material.
Character Set	Values: USA*, FRANCE, GERMANY, UK, DENMARK1, SWEDEN, ITALY, SPAIN1, JAPAN, NORWAY, DENMARK2, SPAIN2, LATIN This item allows you to select a character set of the desired language.
Character Tab.	Values: ITALIC, PC437US*, PC850 This item selects the character set.
LPI	Values: 6*, 8 You can set the number of lines printed in one vertical inch.
Pitch	Values: 10*, 12, 17.14, 20 You can determine the font size by setting the number of characters that will print in one horizontal inch of type.

Network Menu

This menu lets you configure the network interface card installed in your printer. You can upgrade the firmware of the network interface card and print a configuration page.

NOTE: This menu only appears when a network card is installed (ML-3561N, ML-3561ND or ML-3562W, or ML-3560 with an optional network card).

(*: the default setting)

Item	Explanation
Config Network	Values: Yes, No* Set whether or not you configure network values. If you select **Yes**, the following options are available: **Config TCP**, **Config 802.11b**, **AppleTalk**, and **Netware**.
Config TCP	Values: Yes, No* Select whether you set the IP address item or not. If you select **Yes**, you can configure the IP address. If you select **Yes**, the **IP Get Method** option appears on the display. You can select how to get the IP address.
IP Get Method	Values: Static*, BOOTP, DHCP You can set this item only when you set **Config TCP** to **Yes**. • **BOOTP**: The BOOTP server allots the IP address to you automatically. • **DHCP**: The DHCP server allots the IP address to you automatically. • **Static**: You can enter IP address, subnetmask, and gateway manually.

Item	Explanation
IP Address	You can select this item only when you set **IP Get Method** to **Static**. This item lets you enter the IP address manually. Press the scroll button to set the value of the 1st byte between 0 and 255, and then press the **Enter** button. Set the value for the 2nd, 3rd, and 4th byte the same way.
Subnet Mask	You can set this item only when you set **IP Get Method** to **Static**. This item lets you enter the subnet mask manually. Press the scroll button to set the value of the 1st byte between 0 and 255, and then press the **Enter** button. Set the value for the 2nd, 3rd, and 4th bytes in the same way.
Gateway	You can set this item only when you set **IP Get Method** to **Static**. This item lets you enter the gateway manually. Press the scroll button to set the value of the 1st byte between 0 and 255, and then press the **Enter** button. Set the value for the 2nd, 3rd, and 4th byte in the same way.
Config 802.11b	Values: Yes, No* Configure the Wireless Network environments. If you select **Yes**, the following options are available : **SSID**, **Operation Mode**, **Channel**, **Authentication**, **Encryption**, **Using Key**, **Key Type**, and **Key1**~**Key4**. See "Configuring the Wireless Network" on page 8.4 **NOTE**: This menu only appears when an optional wireless network interface card has been installed in ML-3560, ML-3561N or ML-3561ND. The ML-3562W comes with a built-in wired and wireless network card.
AppleTalk	Values: On*, Off This item lets you select whether or not you use the AppleTalk protocol. Select **On** to use the protocol.

Item	Explanation
Netware	Values: On*, Off This item selects whether you use the Netware protocol. If you select **On**, you can access the Config Netware menu item. In the **Config Netware** menu, you can specify the frame type parameter used on your network.
Config Netware	Values: Yes, No* You can set this item only when you set **Netware** to **On**. This item lets you select whether or not you set the frame type parameter. Select **Yes** to select the frame type. If you select **Yes**, the **IPX Frame Type** option appears on the display.
IPX Frame Type	Values: Auto*, EN_8023, EN_II, EN_8022, EN_SNAP You can select this item only when you set **Config Netware** to **Yes**. This item lets you select the IPX frame type. • **Auto**: You can set the frame type automatically. • **EN_8023**: Select this value to use the IEEE 802.3 frame type. • **EN_II**: Select this value to use the ETHERNET II frame type. • **EN_8022**: Select this value to use the IEEE 802.2 frame type. • **EN_SNAP**: Select this value to use the SNAP frame type.
Reset Network	This item reboots the network interface card.
Default Set	This item performs a simple reset and restores the factory default settings for the network configuration. This setting will only take effect after you have reset the printer.
Print Net CFG	This item print a page showing the network parameters you set.

4 Using Print Materials

This chapter will help you understand types of paper you can use with your printer and how to properly load paper in the different paper trays for the best print quality.

This chapter includes:

- **Choosing Paper and Other Materials**
- **Loading Paper**
- **Selecting an Output Location**
- **Printing on Special Print Materials**

Choosing Paper and Other Materials

You can print on a variety of print materials, such as plain paper, envelopes, labels, transparencies, and so on. See "Paper Specifications" on page 10.2. To get the best possible print quality, use only high-quality, copier-grade paper.

When you choose print materials, consider the following:

- **Desired outcome**: The paper you choose should be appropriate for the project.
- **Size**: You can use any size paper that fits easily within the paper adjusters of the paper tray.
- **Weight** : Your printer supports paper weight as follows:
  - -16~28 lbs (60~105 g/m^2) bond for the standard tray or optional Tray2
  - -16~43 lbs (60~163 g/m^2) bond for the Multi-purpose Tray
- **Brightness**: Some papers are whiter than others and produce sharper, more vibrant images.
- **Surface smoothness**: The smoothness of the paper affects how crisp the printing looks on the paper.

CAUTION: Using a material that does not conform to the specifications listed on page 10.2 can cause problems that may require service. This service will not be covered by the warranty or service agreements.

Sizes and Capacities

Size	Input Source/Capacity*		
	Tray1 or optional Tray2	Multi-purpose Tray	Manual Feed
Plain Paper	500	100	1
Envelopes	-	10	1
Labels**	-	25	1
Transparencies**	-	50	1
Card stocks**	-	10	1
Bond**	-	10	1

* Depending on paper thickness, maximum capacity may be reduced.

** If you are experiencing excessive jamming, feed one sheet at a time through the Multi-purpose Tray.

Guidelines for Paper and Special Materials

When selecting or loading paper, envelopes, or other special materials, keep these guidelines in mind:

- Attempting to print on damp, curled, wrinkled, or torn paper can cause paper jams and poor print quality.
- Use cut-sheet paper only. You cannot use multi-part paper.
- Use only high-quality, copier grade paper for the best print quality.
- Do not use paper with irregularities, such as tabs or a staples.
- Do not attempt to load any tray during printing, and never overfill the tray. This could cause a paper jam.
- Avoid paper with embossed lettering, perforations, or a texture that is too smooth or too rough.
- Colored paper should be of the same high quality as white photocopy paper. The pigments must be able to withstand the printer's fusing temperature of 383°F (195°C) for 0.1 seconds without deteriorating. Do not use paper with a colored coating that was added after the paper was produced.

- Preprinted forms must be printed with nonflammable, heat-resistant ink that does not melt, vaporize, or release hazardous emissions when subjected to the printer's approximately 383°F (195°C) fusing temperature for 0.1 seconds.
- Store paper in its ream wrapper until you are ready to use it. Place cartons on pallets or shelves, not on the floor.
- Do not place heavy objects on top of the paper, whether it is packaged or unpackaged.
- Keep paper away from moisture, direct sunlight, or other conditions that can cause it to wrinkle or curl.

NOTE: Do not use carbonless paper or tracing paper. They are unstable at the fusing temperature and can give of fumes, or cause damage to the printer.

Loading Paper

Proper paper loading helps prevent paper jams and ensure trouble-free printing. Do not remove the paper tray while a job is printing. Doing so may cause a paper jam. See "Sizes and Capacities" on page 4.1 for acceptable paper size and capacities for each tray.

The paper level indicator on the front of the paper tray shows the amount of paper currently left in the tray. When the tray is empty, the indicator of the bar is completely lowered.

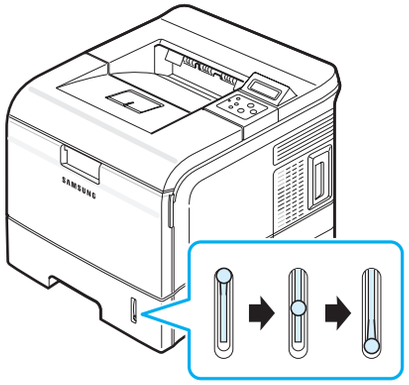

Using the Standard Tray or the Optional Tray

Use the print material you use for the majority of your print jobs in the standard tray. The standard tray can hold a maximum of 500 sheets of 20lb paper.

You can purchase an optional paper tray (Tray2) and attach it below the standard tray to load an additional 500 sheets of paper. See page 9.8 for more information about installing the optional Tray2.

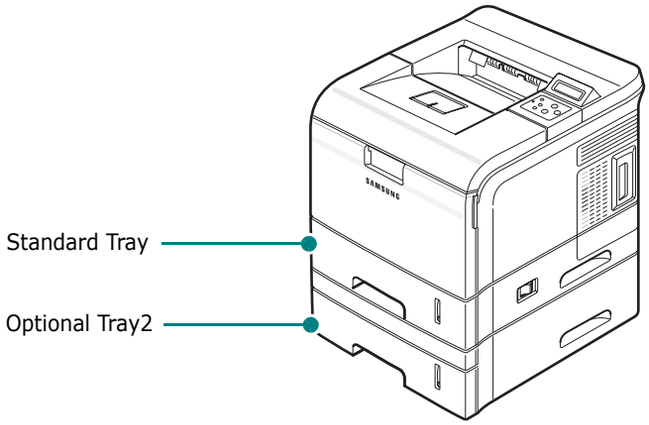

To load paper, pull open the paper tray and load paper with the print side down. For details about loading paper in the standard tray or optional Tray2, see "Loading Paper" on page 2.4.

Using the Multi-purpose Tray

The Multi-purpose Tray is located in the front of your printer. It can be closed when not in use, making the printer more compact.

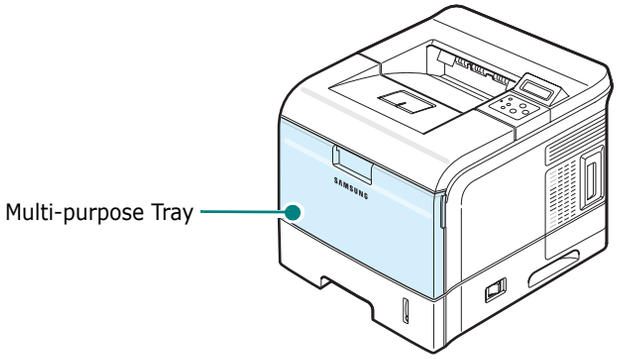

The Multi-purpose Tray can hold several sizes and types of material, such as transparencies, cards, and envelopes. You may also want to use the Multi-purpose Tray for single page print jobs on letterheads, colored paper for use as separator sheets, or other special materials that you do not normally keep in the paper tray. You can load approximately 100 sheets of plain paper, 10 envelopes, 50 transparencies, 10 card stocks, or 25 labels at a time.

- Load only one size of print material at a time in the Multi-purpose Tray.
- To prevent paper jams, do not add paper when there is still paper in the Multi-purpose Tray. This also applies to other types of print materials.
- Print materials should be loaded face up with the top edge going into the Multi-purpose Tray first, and be placed on the center of the tray.
- Do not place objects on the Multi-purpose Tray. Also avoid pressing down or applying excessive force on it. The tray may fall apart from the printer.

To load paper in the Multi-purpose Tray:

1 Pull the Multi-purpose Tray down towards you.

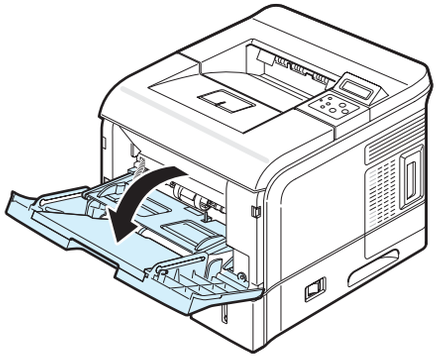

2 Pull the extender to extend the Multi-purpose Tray to hold longer paper.

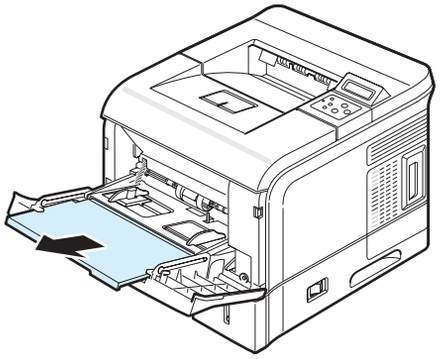

3 If you are using paper, flex or fan the edge of the paper stack to separate the pages before loading.

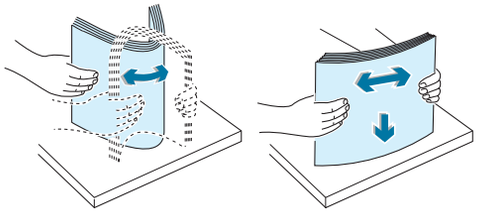

For transparencies, hold them by the edges and avoid touching the print side. Oils from your fingers can cause print quality problems.

4 Load the print material on the center of the tray **with the print side up**.

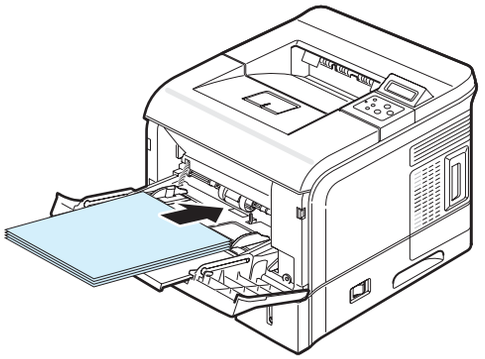

If you want to print on previously printed paper from the Multi-purpose Tray, the printed side should be facing down with an uncurled edge to the printer. If you experience problems with paper feeding, turn the paper around.

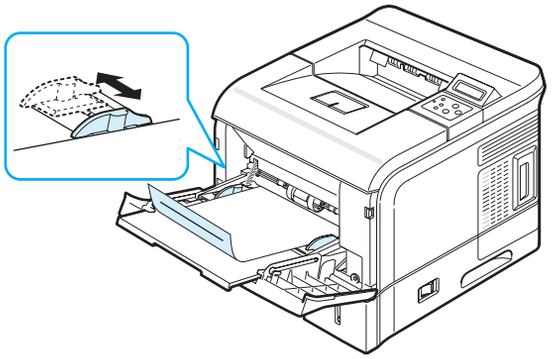

NOTE: Make sure that you have not loaded too much print material. The print material buckles if you load a stack that is too deep or if you push it in too far.

5 Squeeze the paper width guide and slide it to the edge of the print material without causing it to bend.

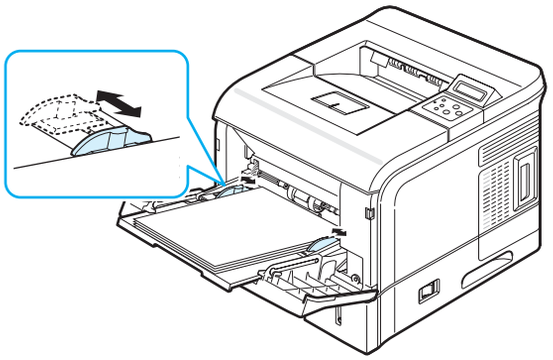

Now, the display on the control panel prompts you to confirm the paper size in the Multi-purpose Tray.

NOTE: Your printer cannot automatically detect the size of paper loaded in the Multi-purpose Tray. Configuring the Multi-purpose Tray with the correct paper size allows you to select paper by size rather than paper source when you print from your software application. You do not have to check which paper is loaded in the Multi-purpose Tray before printing.

6 Press the scroll button (◁ or ▷) until the size of paper you loaded appears on the bottom line of the display.

7 Press the **Enter** button (✳). Now, you are ready to print.

8 When you print a document, set the paper source and type in the software application. For details, see the **Software User's Guide**.

For information about setting on the control panel, see page 3.3.

9 After printing, put the extender back to its place.

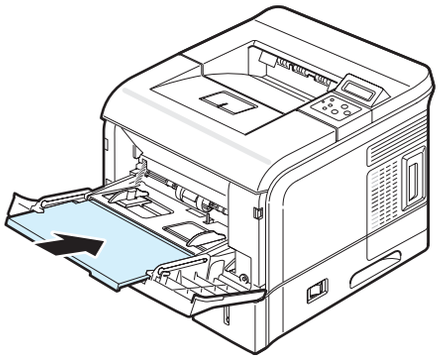

10 Close the Multi-purpose Tray.

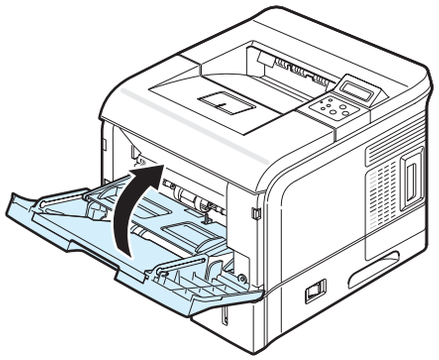

Using the Manual Feed Mode

You can manually load a sheet of print material in the Multi-purpose Tray if you select **Manual Feed** in the **Source** option from the **Paper** tab when you change print settings to print a document. For details about changing print settings, see the **Software User's Guide**. Manually loading paper can be helpful when you want to check the print quality after each page is printed.

This loading procedure is almost the same as the procedure for loading in the Multi-purpose tray, except you load paper sheet-by-sheet in the tray, send print data to print the first page, and press the **On Line/Continue** button (⟲) on the control panel to print each following page.

1 Load a sheet of print material on the center of the Multi-purpose Tray **with the print side up**.

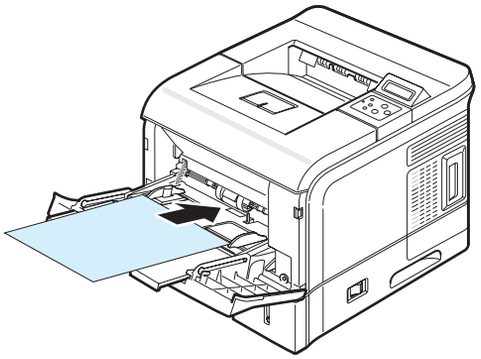

2 Squeeze the paper width guide and slide it to the edge of the print material without causing it to bend.

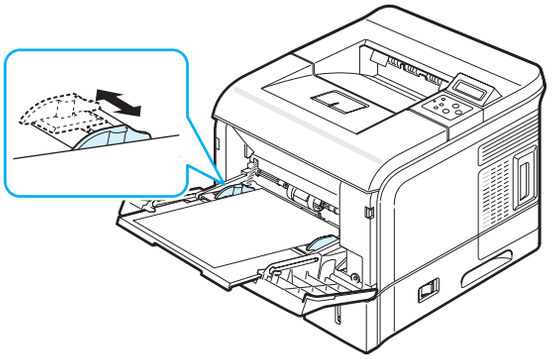

3 When you print a document, set the paper source to **Manual Feed** and select the appropriate paper size and type in the software application. For details, see the **Software User's Guide**.

4 Print a document.

The display shows a message prompting you to load paper and press the **On Line/Continue** button (⟲).

5 Press the **On Line/Continue** button (⟲).

The printer picks up the print material and prints. After one page is printed, the message appears again.

NOTE: If you do not press the button, after a pause the printer will automatically pick the print material.

6 Insert the next sheet into the Multi-purpose Tray and press the **On Line/Continue** button (⟲).

Repeat this step for every page to be printed.

Selecting an Output Location

The printer has two output locations; the rear output tray (face up) and the top output tray (face down).

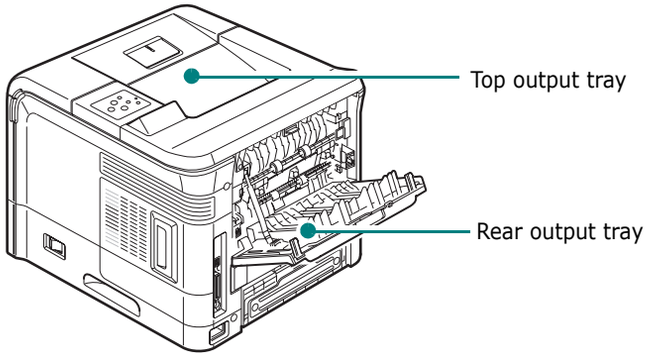

To use the top output tray, make sure that the rear output tray is closed. To use the rear output tray, open it.

NOTES:

- If paper coming out of the top output tray has problems, such as excessive curl, try printing to the rear output tray.
- To avoid paper jams, do not open or close the rear output tray while the printer is printing.

Printing to the Top Output Tray *(Face down)*

The top output tray collects paper face down, in the order in which the sheets were printed. The tray should be used for most print jobs.

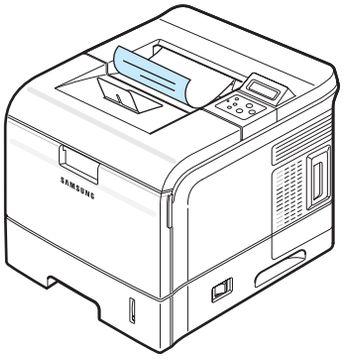

NOTE:

- If you continuously print many pages, the surface of the output tray may become hot. Be careful not to touch the surface, especially for children.
- The top output tray can hold up to 250 sheets of paper.

Printing to the Rear Output Tray *(Face up)*

The printer always prints to the rear output tray if it is open. Paper comes out of the printer face up, with the last page on top.

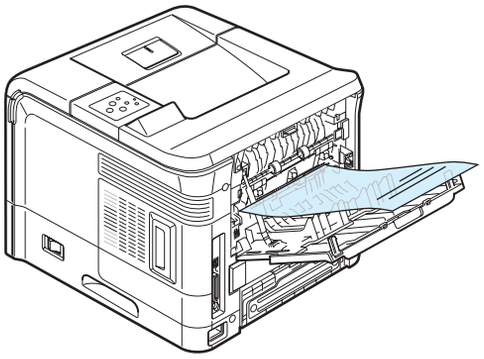

Printing from the Multi-purpose Tray to the rear output tray provides the **straight paper path**. Opening the rear output tray might improve the output quality with the following:

- over 100 sheets of paper continuously
- envelopes
- labels
- small custom-sized paper
- postcards
- paper lighter than 60 g/m^2 (16 lb) or heavier than 105 g/m^2 (28 lb)
- transparencies: some special transparencies may have stacking problem by curl. In that case, please use the top output tray (face down).

To open the rear output tray:

1. Open the rear door by pulling it down. The cover functions as the output tray.

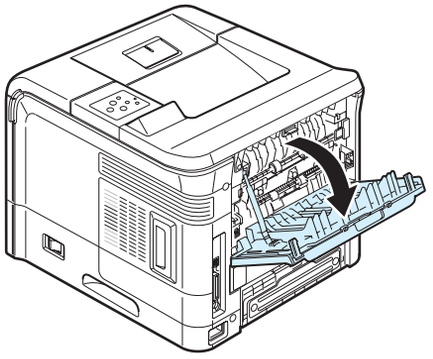

CAUTION: The fusing area inside the rear output tray of your printer becomes very hot when in use. Take care not to burn your fingers when you access this area.

2 Pull the extender to extend the output tray to its full-length position to hold longer paper.

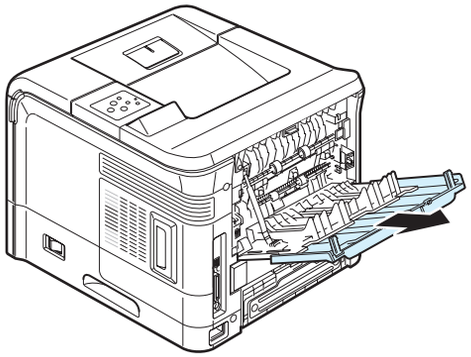

3 If you do not want to stack the printed pages on the rear output tray, slide the extender to its place and close the tray. The pages will stack on the top output tray.

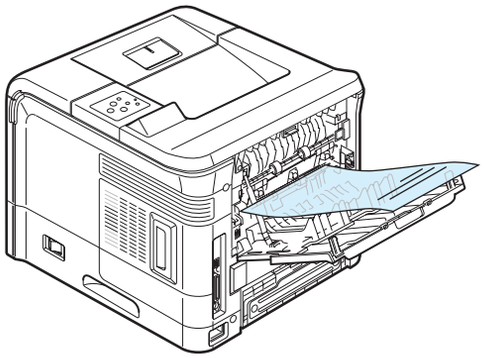

NOTE: The rear output tray can hold up to 100 sheets of paper. If the tray is overloaded with printed pages, it may fall from the printer. Remove the pages so that the tray is not overloaded.

Printing on Special Print Materials

Printing on Envelopes

Guidelines

- Only use envelopes recommended for laser printers. Before loading envelopes in the Multi-purpose Tray, make sure that they are undamaged and are not stuck together.
- Load envelopes into the Multi-purpose Tray only.
- Do not feed stamped envelopes.
- Never use envelopes with clasps, snaps, windows, coated lining, or self-stick adhesives. These envelopes may severely damage the printer.

1 Open the Multi-purpose Tray and pull the extender.

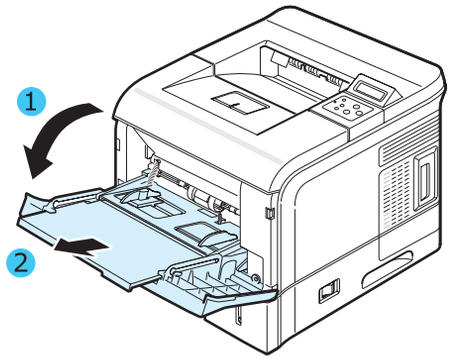

2 Open the rear output tray and pull the extender.

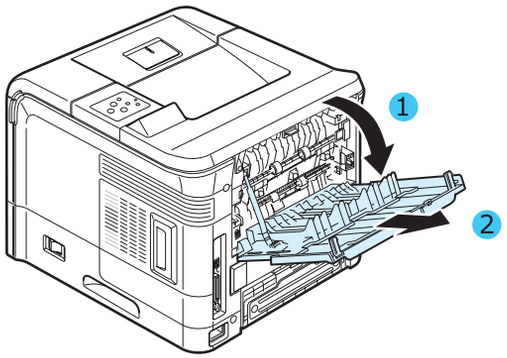

3 Flex or fan the edge of the envelope stack to separate them before loading.

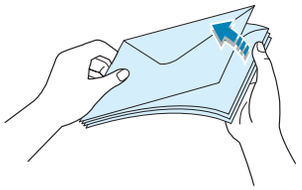

4 Load the envelopes into the Multi-purpose Tray **with the flap side down**. The stamp area is **on the left side** and the end of the envelope **with the stamp area enters the printer first**.

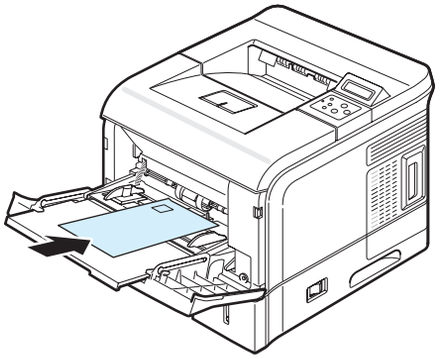

5 Squeeze the paper width guide and slide it to the edge of the envelope stack without causing it to bend.

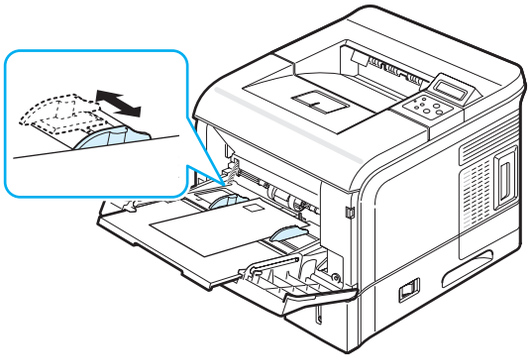

6 When you print, set the paper source, type, and size properly in the software application. For details, see the **Software User's Guide**.

For details about setting on the control panel, see page 3.3.

7 After printing, close the Multi-purpose Tray and the rear output tray.

Printing on Labels

Guidelines

- Only use labels recommended for laser printers.
- Verify that the labels' adhesive material can tolerate fusing temperature of 195°C (383°F) for 0.1 second.
- Make sure that there is no exposed adhesive material between the labels. Exposed areas can cause labels to peel off during printing, which can cause paper jams. Exposed adhesive can also cause damage to printer components.
- Never print on the same sheet of labels more than once, or print on a partial sheet of labels.
- Do not use labels that are separating from the backing sheet or are wrinkled, bubbled, or damaged in any way.
- To prevent labels from sticking together, do not let the printed label sheets stack up as they are printed out.

1 Open the Multi-purpose Tray and pull the extender.

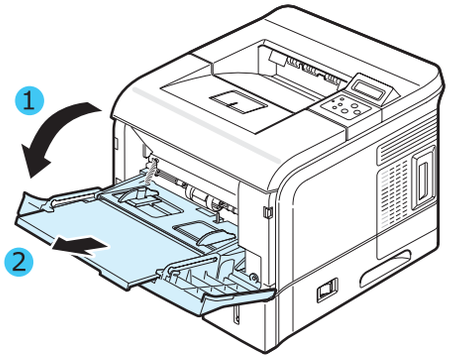

2 Open the rear output tray and pull the extender.

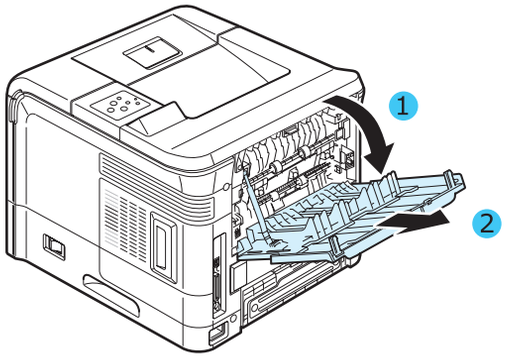

3 Load labels into the Multi-purpose Tray **with the print side up**. Adjust the guide to fit the width of the labels.

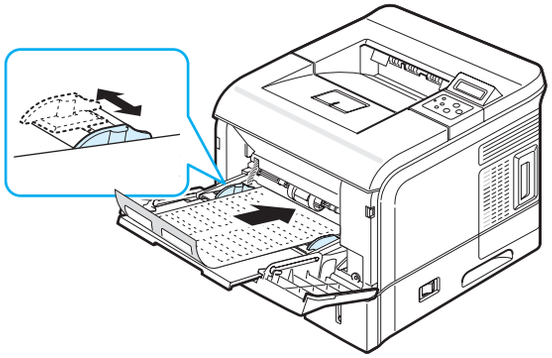

4 When you print, set the paper source, type, and size properly in the software application. For details, see the **Software User's Guide**.

For details about setting on the control panel, see page 3.3.

5 After printing, close the Multi-purpose Tray and the rear output tray.

Printing on Transparencies

Guidelines
- Only use transparencies recommended for use in laser printers.
- Ensure that transparencies are not wrinkled, curled, or have any torn edges.
- Hold the transparencies by the edges and avoid touching the print side. Oils from your fingers can cause print quality problems.
- Be careful not to scratch or leave fingerprints on the print side.

1 Open the Multi-purpose Tray and pull the extender.

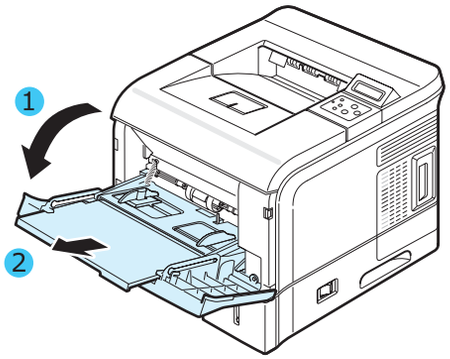

2 Open the rear output tray and pull the extender.

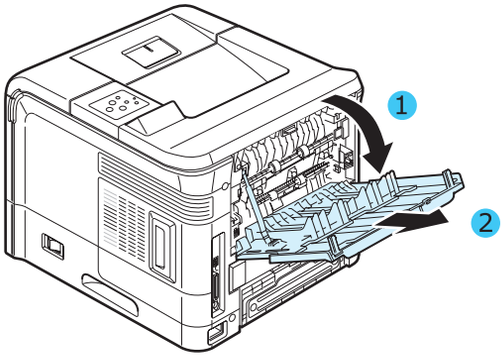

3 Load transparencies in the Multi-purpose Tray **with the print side up**, and **the top with the adhesive strip entering the printer first**. Adjust the guide to fit the width of the transparencies.

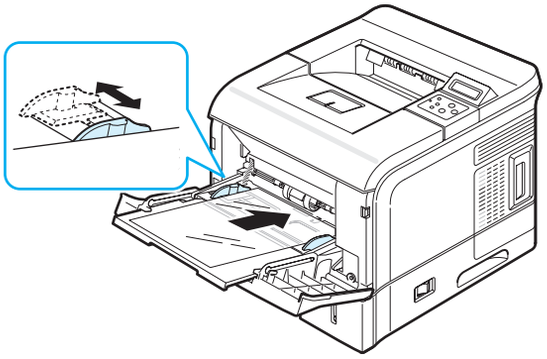

4 When you print, set the paper source, type, and size properly in the software application. For details, see the **Software User's Guide**.

For details about setting on the control panel, see page 3.3.

5 After printing, close the Multi-purpose Tray and the rear output tray.

NOTES:
- If you print on thin transparencies to the rear output tray, they can be curled. In this case, use the top output tray. If the problem persists, check if your transparencies meets the printer's specifications.
- To prevent transparencies from sticking, do not let the printed sheets stack up as they are printed out.
- Place transparencies on a flat surface after removing them from the printer.

Printing on Preprinted Paper

Preprinted paper is paper that has some type of printing on it before it is sent through the printer (paper that has a preprinted logo at the top of the page, for example).

Guidelines
- Letterheads must be printed with heat-resistant ink that will not melt, vaporize, or release hazardous emissions when subjected to the printer's fusing temperature of 383 °F (195 °C) for 0.1 second.
- Ink on letterheads must be non-flammable and should not adversely affect printer rollers.
- Forms and letterheads should be sealed in a moisture-proof wrapping to prevent changes during storage.
- Before you load preprinted paper, such as forms and letterheads, verify that the ink on the paper is dry. During the fusing process, wet ink can come off preprinted paper, reducing print quality.

1 Load letterheads into the tray you want to use, as shown in the figures below. Adjust the guides to fit the width of the paper stack.

Load with the design face down, bottom edge towards the printer.

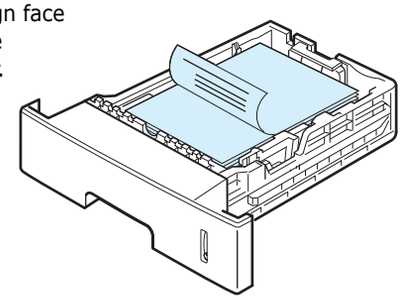

Load with the design face up, top edge towards the printer.

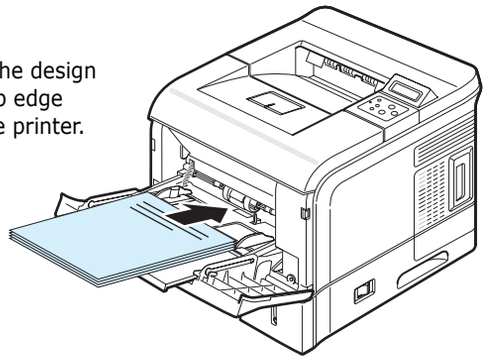

2 When you print, set the paper source, type, and size properly in the software application. For details, see the **Software User's Guide**.

For details about setting on the control panel, see page 3.3.

Printing on Card Stock or Custom-sized Materials

Postcards, 3.5 by 5.83 in. (index) cards, and other custom-sized materials can be printed with your printer. The minimum size is 76 by 127 mm (3 by 5 in.) and the maximum size is 216 by 356 mm (8.5 by 14 in.).

Guidelines

- Always insert the short-edge into the Multi-purpose Tray first. If you want to print in landscape mode, make this selection through your software. Inserting paper long-edge first may cause a paper jam.
- Do not load more than 10 cards into the Multi-purpose Tray at a time.
- Do not print on media smaller than 76 mm (3 in.) wide or 127 mm (5 in.) long.
- In the software application, set margins at least 6.4 mm (0.25 in.) away from the edges of the material.

1 Open the Multi-purpose Tray and pull the extender.

2 Open the rear output tray and pull the extender.

3 Load print material in the Multi-purpose Tray **with the print side up and short edge first**. Adjust the guide to fit the width of the material stack.

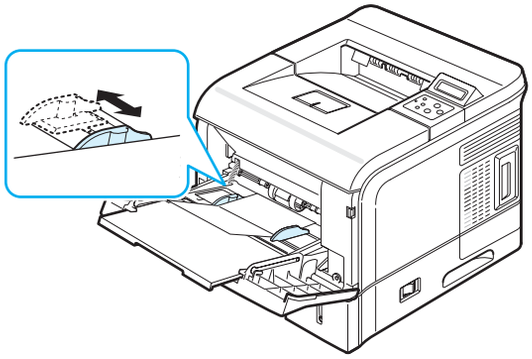

4 When you print, set the paper source, type, and size properly in the software application. For details, see the **Software User's Guide**.

For details about setting on the control panel, see page page 3.3.

5 After printing, close the Multi-purpose Tray and the rear output tray.

5 Basic Printing

This chapter explains common printing tasks.

This chapter includes:

- **Printing a Document**
- **Canceling a Print Job**

Printing a Document

This printer allows you to print from various Windows applications, a Macintosh computer, or a Linux system. The exact steps for printing a document may vary depending on the application you use.

For details about printing, see the **Software User's Guide**.

Canceling a Print Job

If the print job is waiting in a print queue or print spooler, such as the printer group in Windows, delete the job as follows:

1. Click the Windows **Start** button.
2. For Windows 98SE/NT 4.0/2000/Me, select **Settings** and then **Printers**.

   For Windows XP/2003, select **Printers and Faxes**.
3. Double-click the **Samsung ML-3560 Series PCL6** or **Samsung ML-3560 Series PS** icon.
4. From the **Document** menu, select **Cancel Printing** (Windows 98SE/Me) or **Cancel** (Windows NT 4.0/2000/XP/2003).

NOTE: You can access this window simply by double-clicking the printer icon at the bottom right corner of the Windows desktop.

You can also cancel the current job by pressing the **Cancel** button (⊗) on the control panel of your printer.

6 Maintaining Your Printer

This chapter provides information for maintaining your printer and the toner cartridge, as well as suggestions for high-quality and economical printing.

This chapter includes:

- **Printing a Configuration Page**
- **Maintaining the Toner Cartridge**
- **Replacing Transfer Roller**
- **Replacing Pickup Roller**
- **Replacing Pickup Pad**
- **Replacing Fuser Roller**
- **Cleaning the Printer**
- **Consumables and Replacement Parts**

Printing Information Pages

From the printer's control panel, you can print pages that give detailed information about the printer. They can be help you maintain your printer.

Printing a Configuration Page

You can print a configuration page from the printer's control panel. Use the configuration page to view the current settings, to help troubleshoot problems, or to verify the installation of optional accessories, such as memory, optional tray, hard disk, or duplex unit.

To print a configuration page:

1. In ready mode, press the **Menu** button (⊞) on the control panel until you see "Information" on the bottom line of the display.
2. Press the **Enter** button (⊛) to access the menu.
3. Press the **Enter** button (⊛) when "Configuration" displays on the bottom line.

A configuration page prints out.

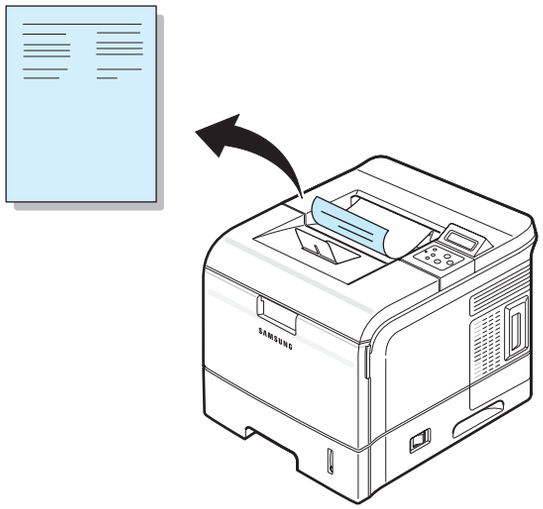

Printing Event Log Page

This page contains a log of the errors. You can print this page only when an optional hard disk is installed in your printer.

To print an event log page:

1. In ready mode, press the **Menu** button (⊞) on the control panel until you see "Information" on the bottom line of the display.
2. Press the **Enter** button (⊛) to access the menu.
3. Press the scroll button (◁ or ▷) until "Event Log" displays on the bottom line.
4. Press the **Enter** button (⊛).

   The Event Log Page prints out.

Printing Usage Page

This page shows the total number of pages printed up to the current time by person or group. It is useful for cost accounting. You can print this page only when an optional hard disk is installed in your printer.

To print a usage page:

1. In ready mode, press the **Menu** button (⊞) on the control panel until you see "Information" on the bottom line of the display.
2. Press the **Enter** button (⊛) to access the menu.
3. Press the scroll button (◁ or ▷) until "Usage Page" displays on the bottom line.
4. Press the **Enter** button (⊛).

   The Usage Page prints out.

Maintaining the Toner Cartridge

Toner Cartridge Storage

To get the maximum results from a toner cartridge, keep the following guidelines in mind:

- Do not remove the toner cartridge from its package until ready for use.
- Do not refill the toner cartridge. **The printer warranty does not cover damage caused by using a refilled cartridge.**
- Store toner cartridges in the same environment as the printer.
- To prevent damage to the toner cartridge, do not expose it to light for more than a few minute.

Expected Cartridge Life

The life of a toner cartridge depends on the amount of toner that your print jobs require. When printing text at 5% coverage, a new toner cartridge lasts an average of 12,000 pages or 6,000 pages depending on its type. (The original toner cartridge supplied with the printer lasts an average of 6,000 pages.)

Saving Toner

To save toner, press the **Toner Save** button (⁂) on the printer control panel. The button backlight turns on. You can also enable the Toner Save mode in the printer properties window or from the control panel menu. For details, see page 2.8.

Using this feature extends the life of the toner cartridge and reduce your cost per page, but it also reduces print quality.

Checking the Toner Remains

You can check the level of toner currently left in the cartridge.

If you are having print quality problems, this can help you determine if the problem is caused by low toner.

1. In ready mode, press the **Menu** button (⊞) on the control panel until you see "Setup" on the bottom line of the display.
2. Press the **Enter** button (⊛) to access the menu.
3. Press the scroll button (◁ or ▷) until "Maintenance" displays on the bottom line and press the **Enter** button (⊛).
4. Press the scroll button (◁ or ▷) until "Remain Toner" displays on the bottom line.
5. Press the **Enter** button (⊛).

   The display shows the percentage of the toner remains.

Redistributing Toner

When a toner cartridge is nearly empty, "Ready Low Toner" appears on the display and faded or light areas may appear on a printed page. Also, the SmartPanel program window appears on the computer telling you the toner cartridge is low on toner. You may be able to temporarily improve print quality by redistributing the toner.

To redistribute the toner:

1. Open the top cover.

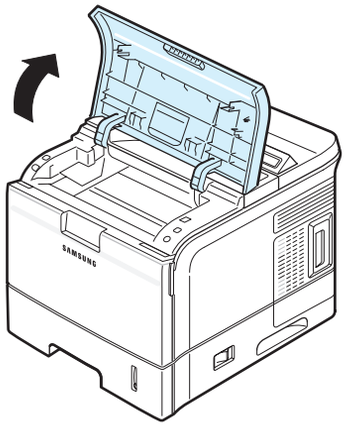

2. Remove the toner cartridge from the printer.

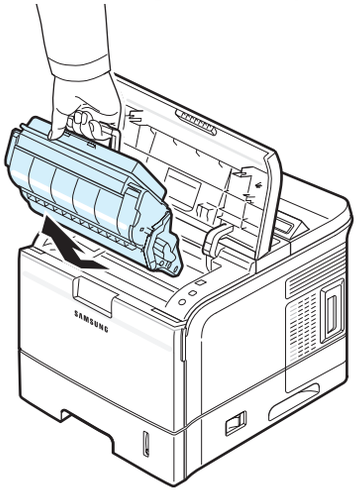

CAUTIONS:

- Avoid reaching too far into the printer. The fusing area may be hot.
- Do not touch the green surface, the OPC drum, on the front of the toner cartridge with your hands or any other material.
- To prevent damage, do not expose the toner cartridge to light for more than a few minutes. Cover it with a piece of paper to protect it, if necessary.

3 Gently shake the toner cartridge from side to side 5 or 6 times to distribute the toner evenly inside the cartridge.

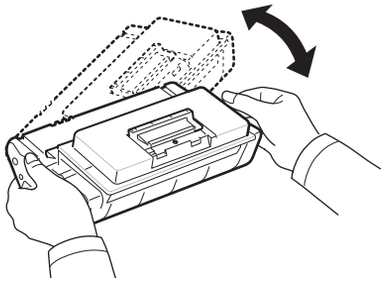

NOTE: If toner gets on your clothing, wipe it off with a dry cloth and wash clothing in cold water. Hot water sets toner into fabric.

4 Locate the cartridge slots inside the printer, one on each side.

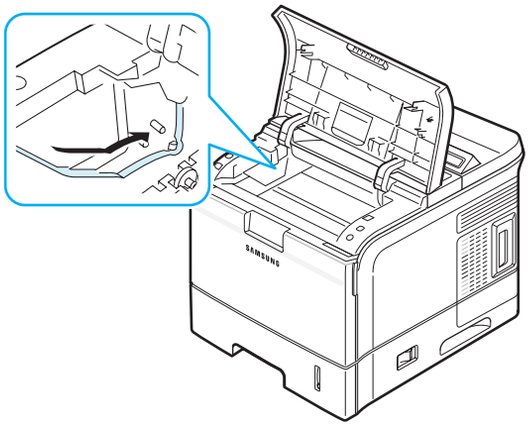

5 Grasp the handle and insert the cartridge in the printer until it snaps into place.

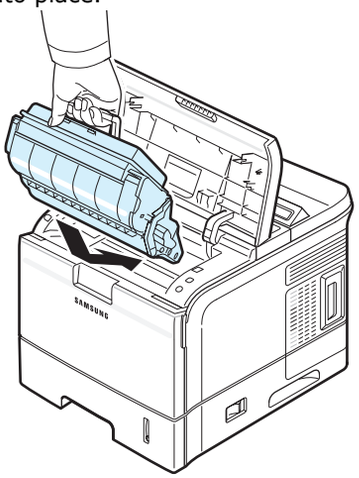

6 Close the top cover. Make sure that the cover is securely closed.

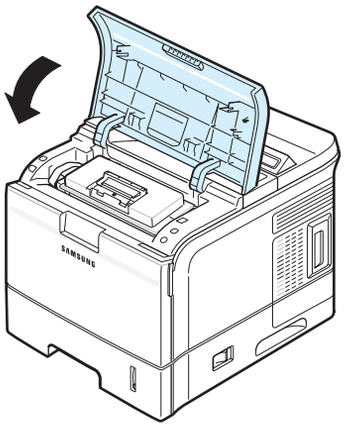

Replacing the Toner Cartridge

When "Ready Replace Cart" appears on the display, you need to replace the toner cartridge. Also, the SmartPanel program window appears on the computer telling you the toner cartridge is empty.

To replace the toner cartridge:

1 Open the top cover.

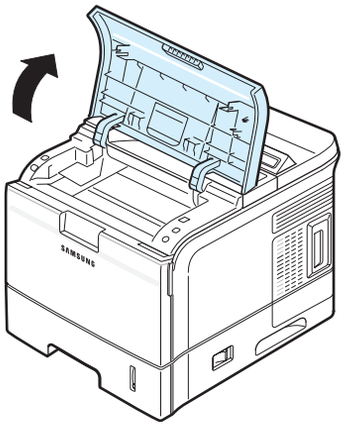

2 Remove the old toner cartridge from the printer.

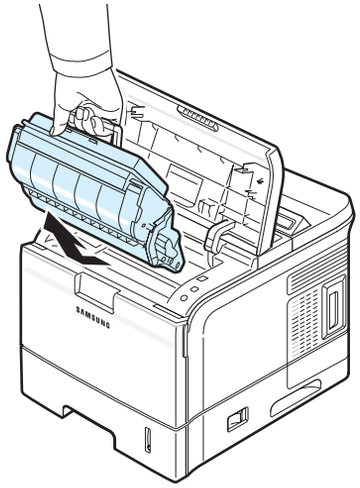

3 Take a new toner cartridge out of its package.

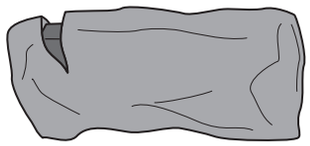

CAUTION: Do not use sharp objects, such as a knife or scissors, to open the toner cartridge package. They might scratch the drum of the cartridge.

4 Locate the sealing tape at the end of the toner cartridge. Carefully pull the tape completely out of the cartridge and discard it.

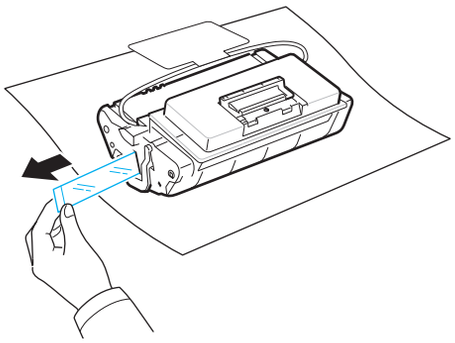

NOTES:

- The sealing tape should be longer than 600 mm when correctly removed.
- Holding the toner cartridge, pull the sealing tape straight to remove it from the cartridge. Be careful not to cut the tape. If this happens, you cannot use the toner cartridge.

5 Hold the toner cartridge and lift up the handle part of the toner cartridge. There is a flexible plastic holder. Remove the holder out of the toner cartridge.

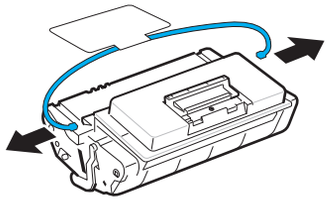

6 Gently shake the cartridge from side to side 5 or 6 times to distribute the toner evenly inside the cartridge.

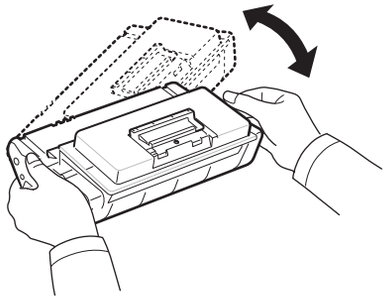

Thoroughly shaking the cartridge will assure maximum copies per cartridge.

CAUTIONS:

- If toner gets on your clothing, wipe it off with a dry cloth and wash clothing in cold water. Hot water sets toner into fabric.
- Do not touch the green surface, the OPC drum, on the front of the toner cartridge with your hands or any other material.
- To prevent damage, do not expose the toner cartridge to light for more than a few minutes. Cover it with a piece of paper to protect it, if necessary.

7 Locate the cartridge slots inside the printer, one on each side.

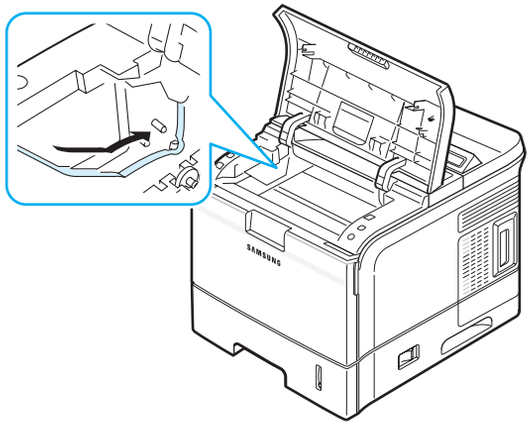

8 Grasp the handle and insert the cartridge in the printer until it snaps into place.

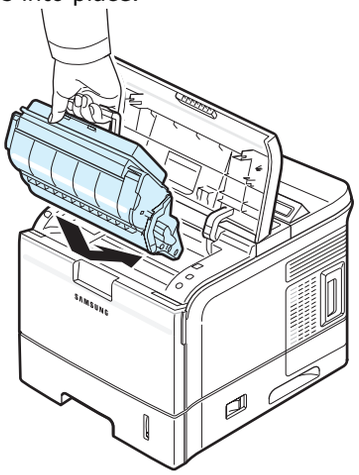

9 Close the top cover. Make sure that the cover is securely closed.

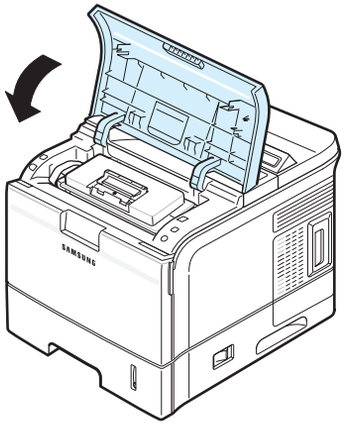

NOTE: When printing text at 5% coverage, you can expect a toner cartridge life of approximately 12,000 pages (6,000 pages for the toner cartridge that is shipped with the printer).

Replacing Transfer Roller

The life of the transfer roller is apprroximately 150,000 pages. When the life of the transfer roller has expired, the display on the control panel shows the the error message, "Replace Transfer Roller". Also, the SmartPanel program window appears on the computer, indicating the paper transfer belt needs to be replaced. At this stage, replace the paper transfer roller.

To replace the transfer roller:

1 Turn the printer off, then wait a few minutes for the printer to cool.

2 Pull open the paper tray and remove it form the printer.

3 Push the lever on the transfer belt and pull the transfer roller.

4 Install a new transfer roller.

5 Insert and slide the paper tray back into the printer.

Replacing Pickup Roller

The life of the pickup roller is apprroximately 150,000 pages. When the life of the pickup roller has expired, the display on the control panel shows the the error message, "Replace Pickup Roller". Also, the SmartPanel program window appears on the computer, indicating the pickup roller needs to be replaced. At this stage, replace the paper pickup roller.

To replace the pickup roller:

1 Turn the printer off, then wait a few minutes for the printer to cool.

2 Pull open the paper tray and remove it form the printer.

3 Open the front cover. Unlatch the two latches on the both side of the front cover carefully.

4 By sliding the front cover to the right, remove it.

5 Pinch the pickup roller and pull it out.

6 Place a new pickup roller into your printer. Align the pin that is located on each side of the roller with the slot in the printer and insert it until it snaps into place.

7 By sliding the fornt cover to the left, insert it.

8 Reconnect the latches you unlatched in the step 3 and close the front cover.

9 Insert and slide the paper tray back into the printer.

Replacing Pickup Pad

The life of the pickup pad is apprroximately 150,000 pages. When the life of the pickup pad has expired, the display on the control panel shows the the error message, "Replace Pickup Pad". Also, the SmartPanel program window appears on the computer, indicating the pickup pad needs to be replaced. At this stage, replace the pickup pad.

To replace the pickup pad:

1 Turn the printer off, then wait a few minutes for the printer to cool.

2 Pull open the paper tray and remove it form the printer.

3 Locate the pickup pad in the front of the tray. Use the flat blade screwdriver to life the one end of the pickup pad as shown below.

4 Disengage the pickup pad using your hand and remove the old pickup pad.

5 Snap a new pickup pad firmly into place until it click.

6 Insert and slide the paper tray back into the printer.

Replacing Fuser Roller

The life of the fuser roller is apprroximately 150,000 pages. When the life of the fuser roller has expired, the display on the control panel shows the the error message, "Replace Fuser Roller". Also, the SmartPanel program window appears on the computer, indicating the fuser roller needs to be replaced. At this stage, replace the fuser roller.

To replace the fuser roller:

1 Turn the printer off, then wait a few minutes for the printer to cool.

2 Open the rear output tray and lift the left end with the gear of the fuser roller outward.

3 Pull the fuser roller out and remove it.

4 Install a new fuser roller by snaping the right end into place and moving the left end into place.

5 Close the rear output tray.

Cleaning the Printer

During the printing process, particles of paper, toner, and dust can accumulate inside the printer. Over time, this build-up can cause print quality problems such as toner specks or smearing. Your printer has a cleaning mode that can correct and prevent these types of problems.

Cleaning the Outside of the Printer

Clean the cabinet of the printer with a soft, lint-free cloth. You can dampen the cloth slightly with water, but be careful not to let any water drip onto the printer or inside of it.

CAUTION: Cleaning the printer cabinet with cleaners containing large amounts of alcohol, solvents, or other strong substances can discolor or crack the cabinet.

Cleaning the Inside of the Printer

NOTE: While cleaning the inside of the printer, be careful not to touch the transfer roller (located underneath the toner cartridge). Oil from your fingers can cause print quality problems.

There are two methods to clean the inside of the printer:

- Clean the inside manually.
- Print a cleaning sheet, which can be done from the control panel.

Cleaning the Inside of the Printer Manually

1. Turn the printer off and unplug the power cord, then wait a few minutes for the printer to cool.
2. Open the top cover and remove the toner cartridge.

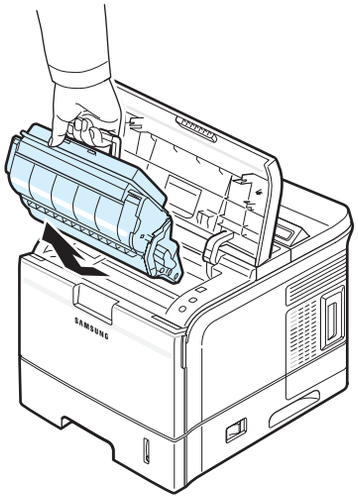

CAUTION:

- Do not touch the green surface, the OPC drum, on the front of the toner cartridge with your hands or any other material.
- To prevent damage, do not expose the toner cartridge to light for more than a few minutes. Cover it with a piece of paper to protect it, if necessary.

3. Look inside the printer. Remove any dust, paper particles, and spilled toner with a damp, soft lint-free cloth.

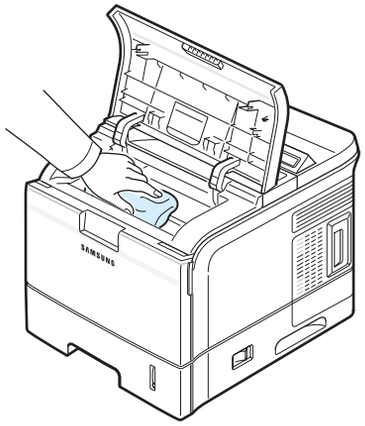

CAUTION: Do not touch the transfer roller inside the printer.

4. Locate the long strip of glass (LSU) inside the top of the cartridge compartment, and gently swab the glass to see if dirt turns the white cotton black.

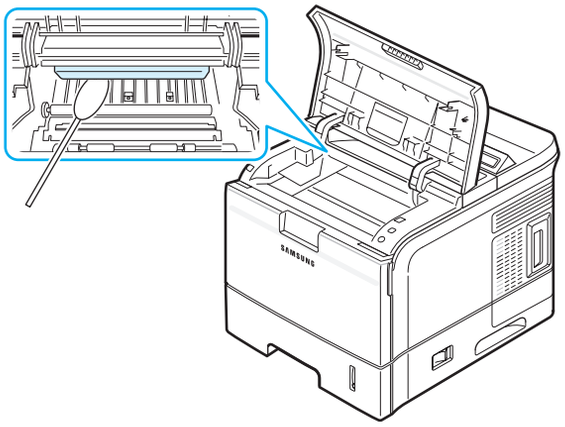

5 Locate the PTL lens by flipping up the guide feed and gently swab the lens with the pointed white cotton..

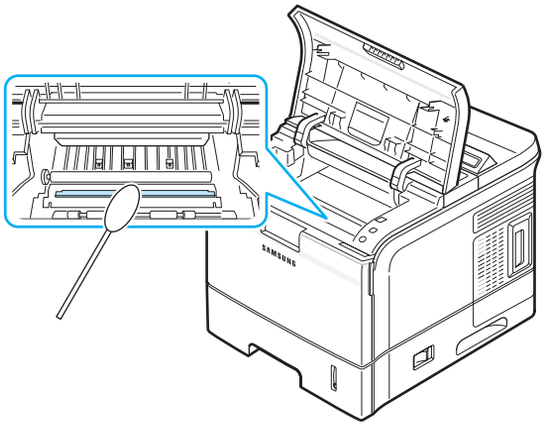

6 Reinsert the toner cartridge and close the cover.

7 Plug in the power cord and turn the printer on.

Printing a Cleaning Sheet

If you are experiencing blurred, faded, or smeared printouts, you can clear the problem by printing a cleaning sheet, provided by your printer. You can print:

- OPC Cleaning sheet: cleans the OPC drum of the toner cartridge.
- Fuser Cleaning sheet: cleans the fuser unit inside the printer.

This process will produce a page with toner debris, which should be discarded.

1 Make sure that the printer is turned on with paper loaded in the tray.

2 In ready mode, press the **Menu** button ( ) on the control panel until you see "Setup" on the bottom line of the display.

3 Press the **Enter** button ( ) to access the menu.

4 Press the scroll button (or) until "Maintenance" displays on the bottom line and press the **Enter** button ( ).

5 Press the scroll button (or) until the required option, "OPC Cleaning" or "Fuser Cleaning" displays on the bottom line.

6 Press the **Enter** button ( ).

Your printer automatically picks up a sheet of paper from the tray and prints out a cleaning sheet with dust or toner particles on it.

Consumables and Replacement Parts

From time to time, you need to replace the following items to maintain top performance and to avoid print quality problems and paper feed problems resulting from worn parts.

The following items should be replaced after you have printed the specified number of pages or when the life span of each item has expired. The SmartPanel program window will appear on the computer, indicating which item needs to be replaced. See below.

Items	Yield (Average)
Transfer Roller	150,000
Pick-up Roller	150,000
Pick-up Pad	150,000
Fuser Roller	150,000

To purchase the consumables and replacement parts, contact your Samsung dealer or the retailer where you bought your printer. If you want to replace the retard roller, we strongly recommend that the item be installed by a trained service professional, except for .

7 Solving Problems

This chapter provides helpful information for what to do if you encounter an error while using your printer.

This chapter includes:

- **Troubleshooting Checklist**
- **Solving General Printing Problems**
- **Clearing Paper Jams**
- **Solving Print Quality Problems**
- **Understanding Display Messages**
- **Common Windows Problems**
- **Common Macintosh Problems**
- **Common PS Problems**
- **Common Linux Problems**

Troubleshooting Checklist

If the printer is not working properly, consult the following checklist. If the printer does not pass a step, follow the corresponding troubleshooting suggestions.

Check	Solution
Make sure that the **On Line/Continue** button on the control panel is on in green and "Ready" is shown on the display.	• If the button backlight is off, check the power cord connection. Check the power switch. Check the power source by plugging the power cord into another outlet. • If the button backlight is on in orange, check the display message and go to "Understanding Display Messages" on page 7.10.
Print a demo page to verify that the printer is feeding paper correctly. See page 2.7.	• If a demo page does not print, check the paper supply in the paper tray. • If the paper jams in the printer, go to "Clearing Paper Jams" on page 7.4. • If an error message appears on the display, go to "Understanding Display Messages" on page 7.10.
Check the demo page to see if it printed correctly.	If there is a print quality problem, go to "Solving Print Quality Problems" on page 7.8.
Print a short document from a software application to verify that the computer and printer are connected and are communicating correctly.	• If the page does not print, check the cable connection between the printer and the computer. • Check the print queue or print spooler to see if the printer has been paused. • Check the software application to ensure that you are using the proper printer driver and communication port. If the page is interrupted during printing, go to "Solving General Printing Problems" on page 7.2.
If completing the checklist does not resolve the printer problem, check the following troubleshooting sections.	• "Solving General Printing Problems" on page 7.2. • "Understanding Display Messages" on page 7.10. • "Common Windows Problems" on page 7.12. • "Common Macintosh Problems" on page 7.12. • "Common PS Problems" on page 7.13. • "Common Linux Problems" on page 7.13.

Solving General Printing Problems

For problems with the operation of your printer, refer to the table for suggested solutions.

Problem	Possible Cause	Solution
The printer does not print.	The printer is not receiving power.	Check the power cord connections. Check the power switch and the power source.
	The printer is not selected as the default printer.	Select **Samsung ML-3560 Series PCL 6** or **Samsung ML-3560 Series PS** as your default printer.
	Check the printer for the following: • The printer cover is not closed. • Paper is jammed. • No paper is loaded. • The toner cartridge is not installed.	After locating the problem, clear it. If a printer system error occurs, contact your service representative. • Close the printer cover. • Clear the paper jam. See page 7.4. • Load paper. See page 2.4. • Install the toner cartridge. See page 2.2.
	The printer may be in manual feed mode and out of paper.	Check the display message, add paper to the Multi-purpose Tray, and press the **On Line/Continue** button on the printer's control panel.
	The connection cable between the computer and the printer is not connected properly.	Disconnect the printer cable and reconnect it.
	The connection cable between the computer and the printer is defective.	If possible, attach the cable to another computer that is working properly and try to print a document. You can also try using a different printer cable.
	The port setting is incorrect.	Check the Windows printer setting to make sure that the print job is sent to the correct port. If the computer has more than one port, make sure that the printer is attached to the correct one.
	The printer may be configured incorrectly.	Check the printer properties to ensure that all of the print settings are correct.
The printer does not print. *(Continued)*	The printer driver may be incorrectly installed.	Reinstall the printer driver; for details, see the **Software User's Guide**. Try printing a test page.
	The printer is malfunctioning.	Check the display message on the control panel to determine if the printer is indicating a system error.
Printer selects print materials from the wrong paper source.	The paper source selection in the printer properties may be incorrect.	For many software applications, the paper source selection is found under the **Paper** tab within the printer properties. Select the correct paper source. For details, see the **Software User's Guide**.
Paper does not feed into the printer.	Paper has not been loaded correctly.	Remove paper from the tray and reload it correctly. Check that the paper size guides are set correctly.
	There is too much paper in the paper tray.	Remove excess paper from the tray.
	The paper is too thick.	Use only paper that meets printer specifications.
Print job is extremely slow.	The job may be very complex.	Reduce the complexity of the page(s) or try adjusting the print quality settings. To adjust the print quality settings, reduce the resolution. If you have set the resolution to **1200 dpi** (**Best**), change it to **600 dpi** (**Normal**). For details, see the **Software User's Guide**. Change the port setting to the USB or network port to improve print speed. Your printer prints A4-sized paper at 33 ppm and letter-sized paper at 34 ppm.
	If using Windows 9x/Me, the Spooling Setting may be set incorrectly.	From the **Start** menu, choose **Settings** and **Printers**. Right-click the **Samsung ML-3560 Series PCL 6** printer icon, choose **Properties**, click the **Details** tab, and then choose the **Spool Settings** button. Select the desired spool setting.
	The computer may have insufficient random-access memory (RAM).	Install more memory in your printer. See "Installing Memory DIMM" on page 9.1.

Problem	Possible Cause	Solution
Half the page is blank.	The page layout is too complex.	Simplify the page layout and remove any unnecessary graphics from the document. Install more memory in your printer. See "Installing Memory DIMM" on page 9.1.
	The page orientation setting may be incorrect.	Change the page orientation in your application. For details, see the **Software User's Guide**.
	The paper size and the paper size settings do not match.	Ensure that the paper size in the printer driver settings matches the paper in the tray. Or, ensure that the paper size in the printer driver settings matches the paper selection in the software application settings you use.
The paper keeps jamming.	There is too much paper in the paper tray.	Remove excess paper from the tray. If printing on special materials, use the Multi-purpose Tray.
	An incorrect type of paper is being used.	Use only paper that meets printer specifications. If printing on special materials, use the Multi-purpose Tray.
	An incorrect output method is being used.	Special print materials, such as thick paper, should not be printed using the top output tray (face-down). Use the rear output tray (face-up) instead.
	There may be debris inside the machine.	Open the top cover and remove the debris.
The printer prints, but the text is wrong, garbled, or incomplete.	The printer cable is loose or defective.	Disconnect and reconnect the printer cable. Try a print job that you have already printed successfully. If possible, attach the cable and printer to another computer and try a print job that you know works. Finally, try a new printer cable.
	The wrong printer driver was selected.	Check the application's printer selection menu to ensure that your printer is selected.
	The software application is malfunctioning.	Try printing a job from another application.

Problem	Possible Cause	Solution
The printer prints, but the text is wrong, garbled, or incomplete. *(Continued)*	The operating system is malfunctioning.	If printing from Windows (any version), exit to a DOS prompt and verify functionality with the following command: At a **C:** prompt, type **Dir LPT1**, and press **Enter**. (This assumes you are connected to LPT1.) Exit Windows and reboot the computer. Turn the printer off and then back on again.
Pages print, but are blank.	The toner cartridge is defective or out of toner.	Redistribute the toner cartridge. See page 6.2. If necessary, replace the toner cartridge. See page 6.3.
	The file may have blank pages.	Check the file to ensure that it does not contain blank pages.
	Some parts, such as the controller or the board, may be defective.	Contact a service representative.
The illustrations print incorrectly in Adobe Illustrator.	The setting in the software application is wrong.	Select **Download as Bit Image** in the **Advanced Options** window of the graphic properties. Print the document again.

Clearing Paper Jams

NOTE: When removing paper that is jammed in the printer, if possible always pull the paper in the direction that it normally moves so as not to damage internal components. Always pull firmly and evenly; do not jerk the paper. If the paper tears, ensure that all fragments of paper are removed; otherwise a jam will occur again.

When a paper jam occurs, the display on the control panel shows the message indicating the corresponding location of the paper jam. Refer to the table below to locate the paper jam and to clear it:

Message	Location of Jam	Go To
Paper Jam0	In the paper feed area	below
Paper Jam1	Around the toner cartridge	page 7.6
Paper Jam2	In the paper exit area	page 7.7
Duplex Jam (1, 2)	In the duplex area	page 7.7

To resume printing after clearing paper jams, you must open and close the top cover.

In the Paper Feed Area

In the Tray

1 Slide out the standard tray to expose the jammed paper.

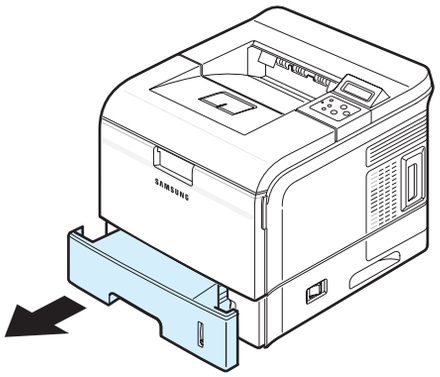

2 Remove any jammed paper by gently pulling it straight out by the visible edge from the tray. Make sure that all of the paper is properly aligned in the tray.

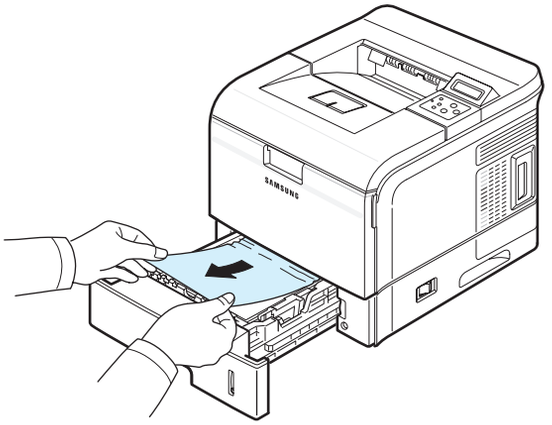

NOTE: If you cannot find jammed paper, or if there is any resistance removing the paper, stop pulling and remove the tray from the printer and carefully pull the jammed paper from the printer.

3 Slide the tray back into the printer.

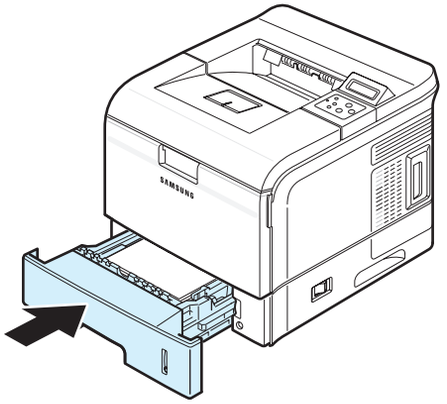

4 Open and close the top cover. The printer will resume printing.

In the Optional Tray2

1 Pull the optional Tray2 out of the printer.

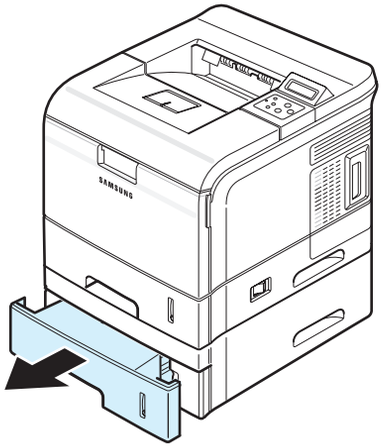

2 Remove the jammed paper from the tray. Slide the tray back into the printer. Go to step 6.

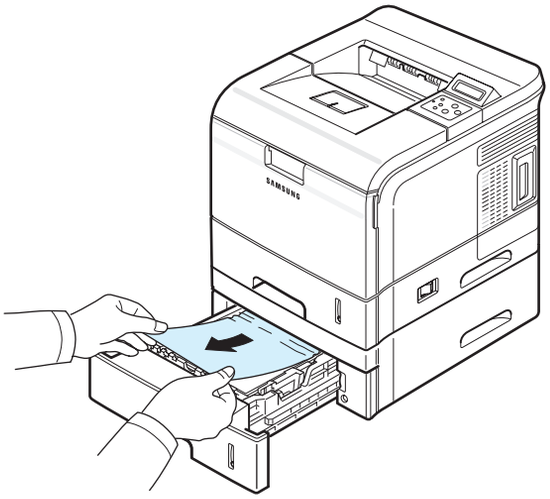

If you cannot find jammed paper, or if there is any resistance removing the paper, stop pulling and go to step 3.

3 Remove the Tray 2 and pull the standard tray half way out of the printer.

4 Pull the jammed paper by gently pulling it straight out.

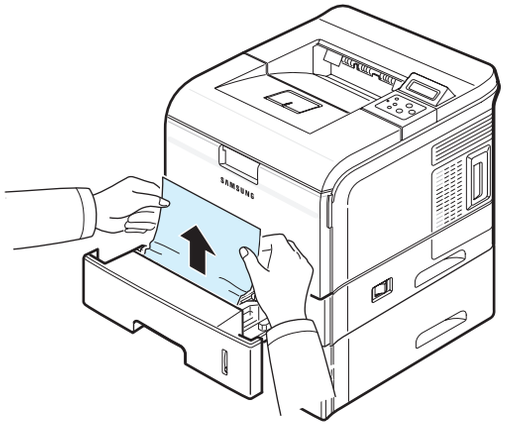

5 Slide the trays back into the printer.

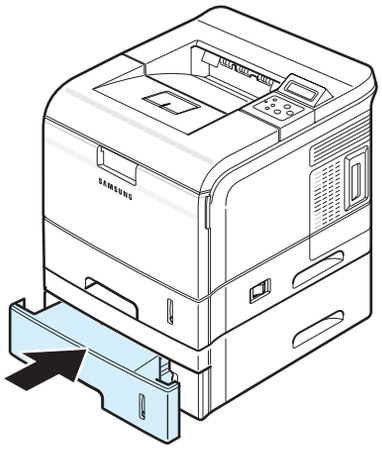

6 Open and close the top cover. The printer will resume printing.

In the Multi-purpose Tray

1 Open the Multi-purpose Tray.

2 Remove the jammed paper by pulling in direction shown. To avoid tearing the paper, pull it out gently and slowly.

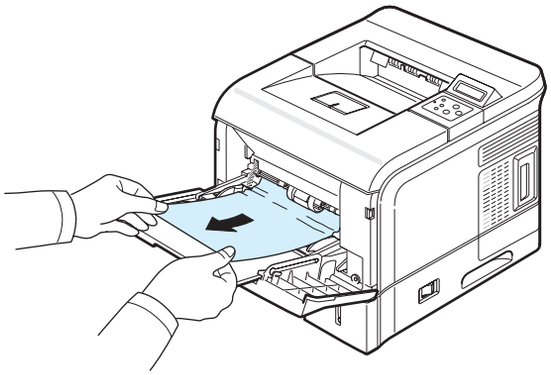

3 Open and close the top cover. The printer will resume printing.

Around the Toner Cartridge

1 Open and close the top cover. The jammed paper automatically exits the printer.

If the paper does not exit, continue to step 2.

2 Open the top cover and remove the toner cartridge.

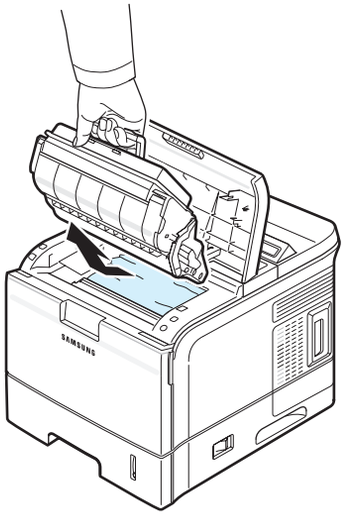

CAUTION:

- Do not touch the green surface, the OPC drum, on the front of the toner cartridge with your hands or any other material.
- To prevent damage, do not expose the toner cartridge to light for more than a few minutes. Cover it with a piece of paper to protect it, if necessary.

3 Carefully lift up the guide feed.

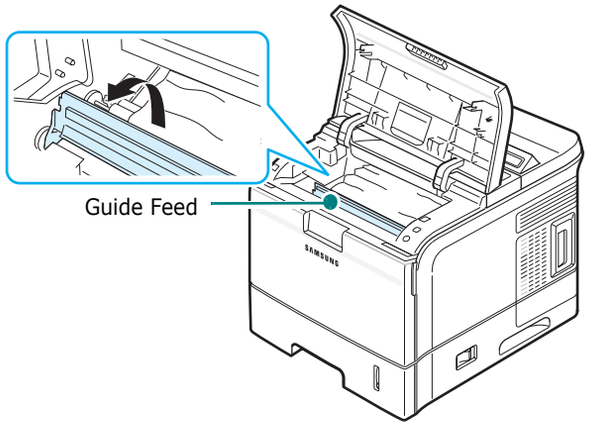

4 Gently pull the jammed paper towards you to remove it from the printer.

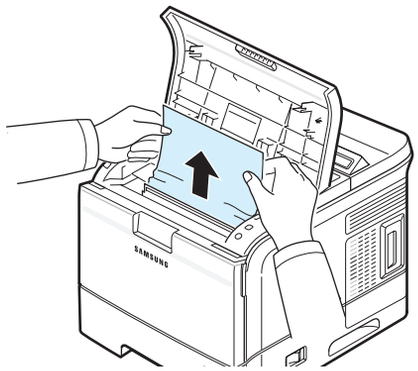

If you cannot find jammed paper, or if there is any resistance removing the paper, stop pulling and go to "In the Paper Exit Area" on page 7.7.

5 Flip down the guide feed and reinstall the toner cartridge.

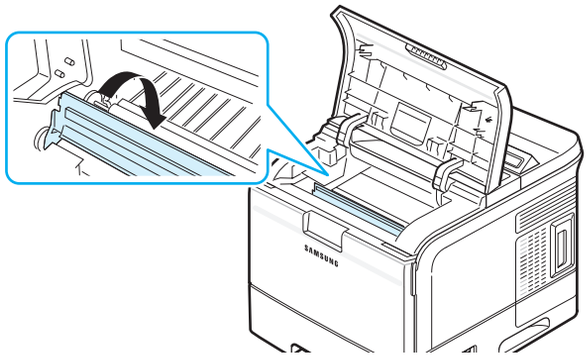

NOTE: If it is difficult to reinstall the toner cartridge, make sure that the guide feed has been flipped back down into position.

6 Close the top cover. The printer will resume printing.

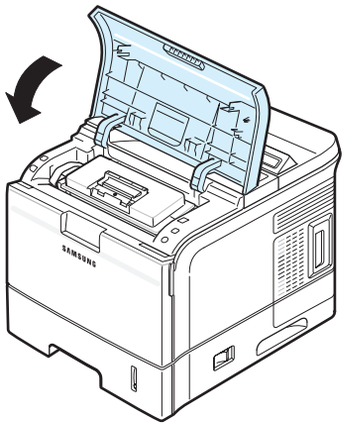

In the Paper Exit Area

1 If a long portion of the paper is visible, pull it straight out. Go to step 5.

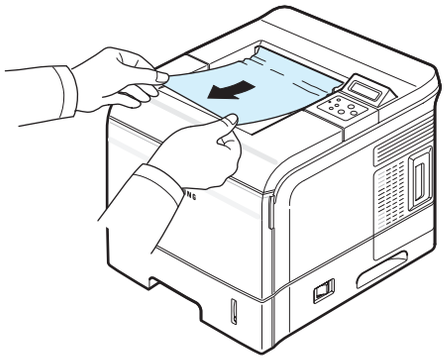

If you cannot find jammed paper, or if there is any resistance removing the paper, stop pulling and go to step 2.

2 Open the rear output tray.

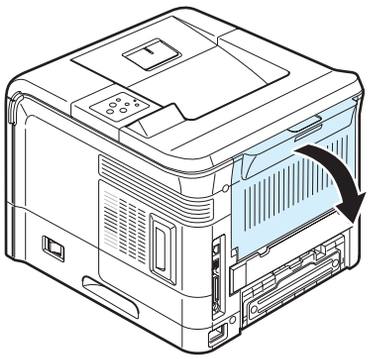

3 Loosen the jammed paper if it is caught in the feed rollers. Then gently pull the paper straight out.

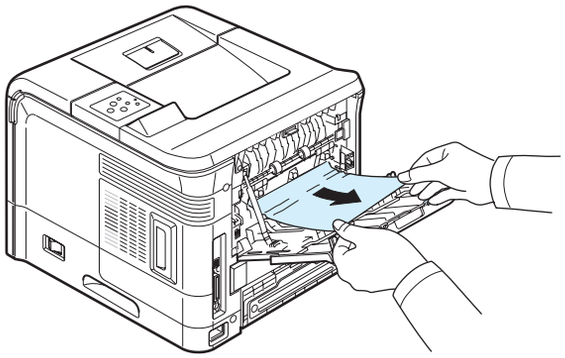

4 Close the rear output tray.

5 Open and close the top cover. The printer will resume printing.

In the Duplex Area

Duplex Jam 1

1 Open the rear output tray.

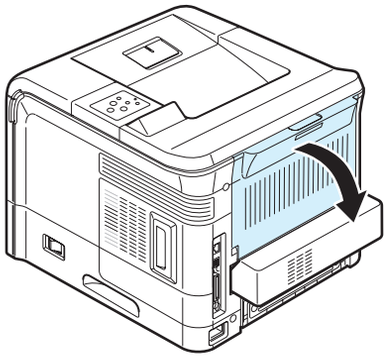

2 Gently pull the paper straight up.

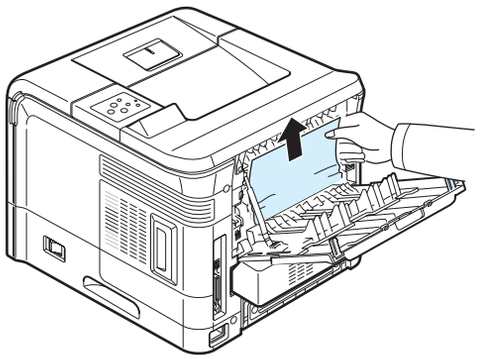

3 Close the rear output tray.

4 Open and close the top cover. The printer will resume printing.

Duplex Jam 2

1 Pull the duplex unit out of the printer.

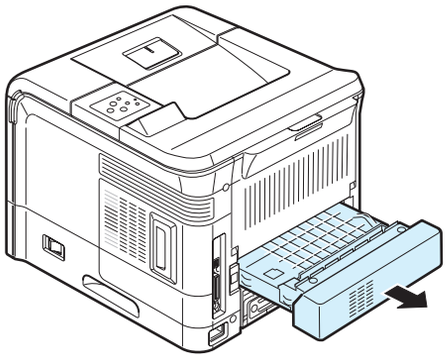

2 Locate the jammed paper and remove it.

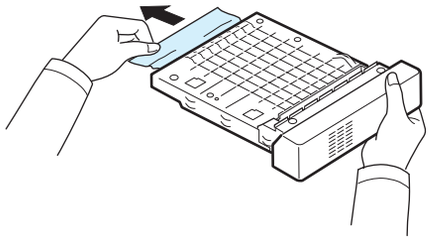

3 Insert the duplex unit into the slot.

4 Open and close the top cover. The printer will resume printing.

Tips for Avoiding Paper Jams

By selecting the correct paper types, most paper jams can be avoided. If a paper jam occurs, follow the steps outlined in "Clearing Paper Jams" on page 7.4.

- Follow the procedures in "Loading Paper" on page 2.4. Ensure that the adjustable guides are positioned correctly.
- Do not overload the paper tray.
- Do not remove the paper from the tray while printing.
- Flex, fan, and straighten the paper before loading.
- Do not use creased, damp, or highly curled paper.
- Do not mix paper types in the tray.
- Use only recommended print materials. See "Paper Specifications" on page 10.2.
- Ensure that the recommended print side is facing down in the tray and facing up in the Multi-purpose Tray.

Solving Print Quality Problems

Dirt inside of the printer or improper paper loading may reduce print quality. See the table below to troubleshoot problems.

Problem	Solution
Light or faded print AaBbCc AaBbCc AaBbCc AaBbCc AaBbCc	If a vertical white streak or faded area appears on the page: • The toner supply is low. You may be able to temporarily extend the toner cartridge life. See "Redistributing Toner" on page 6.2. If this does not improve print quality, install a new toner cartridge. • The paper may not meet paper specifications (for example, the paper is too moist or too rough). See "Paper Specifications" on page 10.2. • If the entire page is light, the print resolution setting is too light or the Toner Save Mode is on. Adjust the print resolution and the Toner Save mode in the printer properties. For details, see the **Software User's Guide**. • A combination of faded or smeared defects may indicate that the printer needs cleaning. See "Cleaning the Inside of the Printer" on page 6.9. • The surface of LSU may be dirty. Clean the LSU. See "Cleaning the Inside of the Printer" on page 6.9.
Toner specs AaBbCc AaBbCc AaBbCc AaBbCc AaBbCc	• The paper may not meet specifications (for example, the paper is too moist or too rough). See "Paper Specifications" on page 10.2. • The transfer roller or paper path may be dirty. See "Cleaning the Inside of the Printer" on page 6.9.
Dropouts AaBbCc AaBbCc AaBbCc AaBbCc AaBbCc	If generally rounded, faded areas occur randomly on the page: • A single sheet of paper may be defective. Try reprinting the job. • The moisture content of the paper is uneven or the paper has moist spots on its surface. Try a different brand of paper. See "Paper Specifications" on page 10.2. • The paper lot is bad. The manufacturing processes can cause some areas to reject toner. Try a different kind or brand of paper. • The toner cartridge may be defective. See "Vertical repetitive defects" on the next page. • If these steps do not correct the problems, contact a service representative.

Problem	Solution
Vertical lines	If black vertical streaks appear on the page: • The drum inside the toner cartridge has probably been scratched. Install a new toner cartridge. If white vertical lines appear on the page: • The surface of the LSU may be dirty. Clean the LSU. See page 6.9.
Gray background	If the amount of background shading becomes unacceptable, the procedures below may fix the problem. • Change to lighter weight pages. See "Paper Specifications" on page 10.2. • Check the printer's environment; very dry (low humidity) or high humidity (higher than 80% RH) conditions can increase the amount of background shading. • Remove the old toner cartridge and install a new one. See "Replacing the Toner Cartridge" on page 6.3.
Toner smear	• Clean the inside of the printer. See "Cleaning the Inside" on "Cleaning the Inside of the Printer" on page 6.9. • Check the paper type and quality. See "Paper Specifications" on page 10.2. • Remove the toner cartridge and install a new one. See "Replacing the Toner Cartridge" on page 6.3.
Vertical repetitive defects	If marks repeatedly appear on the printed side of the page at even intervals: • The toner cartridge may be damaged. If a repetitive mark occurs on the page, print a cleaning sheet several times to clean the cartridge; see page 6.10. After the printout, if you still have the same problems, install a new toner cartridge. See "Replacing the Toner Cartridge" on page 6.3. • Parts of the printer may have toner on them. If the defects occur on the back of the page, the problem will likely correct itself after a few more pages. • The fusing assembly may be damaged. Contact a service representative.

Problem	Solution
Background scatter	Background scatter results from bits of toner distributed on the printed page. • The paper may be too damp. Try printing with a different batch of paper. Do not open packages of paper until necessary so that the paper does not absorb too much moisture. • If background scatter occurs on an envelope, change the printing layout to avoid printing over areas that have overlapping seams on the reverse side. Printing on seams can cause problems. • If background scatter covers the entire surface area of a printed page, adjust the print resolution through your software application or via the printer properties window.
Misformed characters	• If characters are improperly formed and producing hollowed images, the paper stock may be too slick. Try a different paper. See "Paper Specifications" on page 10.2. • If characters are improperly formed and producing a wavy effect, the scanner unit may need service. Verify that it also occurs on a demo page (see page 2.7). For service, contact a service representative.
Page skew	• Ensure that the paper is loaded properly. • Check the paper type and quality. See "Paper Specifications" on page 10.2. • Ensure that the paper or other material is loaded correctly and the guides are not too tight or too loose against the paper stack.
Curl or wave	• Ensure that the paper is loaded properly. • Check the paper type and quality. Both high temperature and humidity can cause paper curl. See "Paper Specifications" on page 10.2. • Turn over the stack of paper in the tray. Also try rotating the paper 180° in the tray. • Try printing to the face up output slot.
Wrinkles or creases	• Ensure that the paper is loaded properly. • Check the paper type and quality. See "Paper Specifications" on page 10.2. • Open the rear output tray and try printing to the rear output tray (face-up). • Turn over the stack of paper in the paper tray. Also try rotating the paper 180° in the tray.

Problem	Solution
Back of printouts are dirty	• The transfer roller may be dirty. "Cleaning the Inside of the Printer" on page 6.9. • Check for leaking toner. Clean the inside of the printer.
Solid color or Black pages	• The toner cartridge may not be installed properly. Remove the cartridge and reinsert. • The toner cartridge may be defective and need replacing. Install a new toner cartridge. • The printer may require repair. Contact a service representative.
Loose toner	• Clean the inside of the printer. • Check the paper type and quality. See page 10.2. • Install a new toner cartridge. See "Replacing the Toner Cartridge" on page 6.3. • If the problem persists, the printer may require repair. Contact a service representative.
Character Voids	Character voids are white areas within characters that should be solid black: • If you are using transparencies, try another type of transparency. Because of the composition of the transparency, some character voids may be normal. • You may be printing on the wrong surface on the paper. Remove the paper and turn it around. • The paper may not meet paper specifications. See "Paper Specifications" on page 10.2.
Horizontal stripes	If horizontally aligned black streaks or smears appear: • The toner cartridge may be installed improperly. Remove the cartridge and reinsert. • The toner cartridge may be defective. Install a new toner cartridge. See "Replacing the Toner Cartridge" on page 6.3. • If the problem persists, the printer may require repair. Contact a service representative.

Problem	Solution
Curl	If the printed paper is curled or paper does not feed into the printer: • Turn over the stack of paper in the tray. Also try rotating the paper 180° in the tray. • Try printing to rear output tray.

Understanding Display Messages

Messages appear on the SmartPanel program window or the control panel display to indicate the printer's status or errors. Refer to the tables below to understand the messages' meaning and correct the problem if necessary. Messages and their meanings are listed in alphabetical order.

NOTE: When you call for service, it is very convenient to tell the service representative the display message.

Message	Status	Do this...
Cleaning Now	An OPC or fuser cleaning page is printing.	Wait until printing is complete.
Close Fuser Door	A rear output cover is open.	Close the rear output cover firmaly.
Cover Open / No Toner Cartridge	A cover is open. Or, there is no toner cartridge installed in your printer	Close the top cover or rear output tray firmly. Or, install the cartridge.
Delete	The stored files in the optional hard disk is deleting	Waite until deleting is complete.
Duplex Jam (1, 2)	A paper jam occurs while printing on both sides of paper.	Remove the jammed paper from the printer, referring to page 7.7.
Engine Fuser Error	A problem has occurred in the fuser inside the printer.	Unplug the power cord and plug it in again. If the problem persists, call for service.
Engine Fuser Low Heat Error	The temperature in the fuser is abnormally low.	Unplug the power cord and plug it in again. If the problem persists, call for service.

Message	Status	Do this...
Engine Fuser Over Heat Error	The temperature in the fuser is abnormally high.	Unplug the power cord and plug it in again. If the problem persists, call for service.
Engine Hsync Error	There is a problem in your printer engine.	Turn off and then on the printer.
Engine LSU Error	A problem has occurred in the LSU (Laser Scanning Unit) in the printer.	Unplug the power cord and plug it in again. If the problem persists, call for service.
Initialize System	The printer is now turning on.	Wait until your printer turns on completely.
Check Cartridge	Your toner cartridge is not for your printer.	Install a Samsung-approved toner cartridge, designed for your printer.
Load Manual Press Cont Key	The Multi-purpose Tray is empty in manual feed mode.	Load a sheet of print material and press the **On Line/Continue** button. You need to press the button each page to be printed.
Load [Size] In [Tray]	The paper size specified in the printer properties does not match the paper you are loading.	Load the correct paper in the tray.
Memory Overflow	The printer does not have enough memory to print the current job.	The job will be automatically cleared and the printer will return to ready mode. • Expand the memory in your printer. See"Installing Memory DIMM" on page 9.1.
Menu	The **Menu** button is pressed.	Use the printer features.
Offline	The printer is off-line and cannot print.	Press the **On Line/ Continue** button.
Outbin Full	The output bin is full.	It can hold up to 250 sheets of paper. Once the paper is removed from the output bin, the printer resumes printing.

Message	Status	Do this...
Page Too Complex	Too complicated data was sent to the printer.	Simplify the page layout and remove unnecessary graphics from your document. If the message persists, expand the memory in your printer. See "Installing Memory DIMM" on page 9.1.
Paper Empty [Size] In [Tray]	The displayed tray is empty.	Load the corresponding size of paper into the tray.
Paper Jam 0	A paper jam occurs in the paper feed area.	Remove the jammed paper from the tray in use, referring to page 7.4.
Paper Jam 1	A paper jam occurs around the toner cartridge.	Remove the jammed paper from the printer, referring to page 7.6.
Paper Jam 2	A paper jam occurs in the paper exit area.	Remove the jammed paper from the output tray, referring to page 7.7.
Press Cont key	The paper size specified in the printer properties does not match the paper you are loading.	Load the correct paper and press the **On Line/ Continue** button.
Printing xxx (xxx: Emulation)	The printer is printing jobs using the displayed language.	Complete your printing.
Ready	The printer is on-line and ready to printer.	Use your printer.
Ready Close Tray 1	The standard tray is open but there is paper in the Multi-purpose tray.	Close the standard tray to clear the message.
Ready Close Tray 2	The optional Tray2 is open but there is paper in the Multi-purpose tray.	Close the optional Tray2 to clear the message.
Ready IP Conflict	An IP address conflicts with other devices on the network.	Contact your network administrator and choose an address within your subnet which will not conflict with any other devices.
Ready Low Toner	The toner cartridge in your printer is nearly empty.	Redistribute the toner, referring to page 6.2.

Message	Status	Do this...
Ready Replace Cart.	The life of some parts on the toner cartridge ends.	The overflow of the waste toner contaminates the inside of the machine. Regardless of the remaining toner, this is warning message showing that The toner cartridge replacement is needed as the parts life there of is exhausted. the toner cartridge is at the end of its life and the print quality lowers, You need to replace the cartridge to new one. to continue printing, press **On Line/Continue** each time you print a page.
Replace Cart.	The toner cartridge is out of its life.	Replace the toner cartridge.
Serial Error * *may be shown only if you installed an optional serial interface card*.	The printer detects a serial interface error.	Set the baud rate the same as the setting on your computer.
Sleeping	The printer is on Power Save mode.	When data is received, it switches to on-line automatically.
Reset Now	The network card is initializing.	Wait until the message is cleared.
Restore	The printer settings or network settings are turning to their default value.	Wait until restoring is complete.
Tray 1 Open	The standard tray is open and also there is no paper in the Multi-purpose tray.	Close the standard tray or load paper in the Multi-purpose tray.
Tray 2 Open	The optional Tray2 is open and also there is no paper in the Multi-purpose tray.	Close the optional Tray2 or load paper in the Multi-purpose tray.

Common Windows Problems

Problem	Possible Cause and Solution
"File in Use" message appears during installation.	Exit all software applications. Remove all software from the StartUp Group, then restart Windows. Reinstall the printer driver.
"Error Writing to LPTx" message appears.	• Ensure that the cables are connected correctly, the printer is on. • If bi-directional communication is not turned on in the driver, it will also cause this message.
"General Protection Fault", "Exception OE", "Spool32", or "Illegal Operation" messages appear.	Close all other applications, reboot Windows and try printing again.
"Fail To Print," "A printer timeout error occurred," messages appear.	These messages may appear during printing. Just keep waiting until the printer finishes printing. If the message appears in standby mode or after printing has been completed, check the connection and/or whether an error has occurred.

NOTE: Refer to Microsoft Windows 9x/Me/NT 4.0/2000/XP/2003 User's Guide that came with your PC for further information on Windows error messages.

Common Macintosh Problems

Problem	Possible Cause and Solution
The printer does not print a document from Acrobat Reader.	You should change the Print Method option to **Print as Image** when you print from Acrobat Reader.
The document has printed, but the print job has not disappeared from the spooler in Mac OS 10.3.2.	Update your Mac OS to OS 10.3.3 or higher.

Common PS Problems

The following situations are PS language specific and may occur when several printer languages are being used.

NOTE: To receive a printed or screen displayed message when PS errors occur, open the Print Options window and click the desired selection next to the PostScript errors section. You can also receive an error list by setting from the control panel. See page 3.9.

Problem	Possible Cause	Solution
PostScript file can not be printed.	The PostScript driver may not be installed.	• Print a configuration page and verify that the PS version is available for printing. • Install the PostScript driver; to installing the PS printer driver, you need to selct **Custom** and put a check mark on the PS printer driver. For details, see the **Software User's Guide**.
"This job contains binary data..." message appears.	The pure binary data option is not supported by the PostScript driver.	Open the PostScript driver Properties, and click on **Advanced**. The pure binary data option is not supported. Choose another.
A PS error page prints.	Print job may not be PS.	Make sure that the print job is a PS job. Check to see whether the software application expected a setup or PS header file to be sent to the printer.
The optional Tray2 is not selected in the driver.	The printer driver has not been configured to recognize the optional Tray2.	Open the PostScript driver properties and set the **Tray2** item of the **Device option** to **Installed**.

Common Linux Problems

Problem	Possible Cause and Solution
I can't change settings in the configuration tool.	You need to have administrator privileges to be able to affect global settings.
I am using the KDE desktop but the configuration tool and LLPR won't start.	Maybe you do not have the GTK libraries installed. These usually come with most Linux distributions, but you may have to install them manually. Refer to your distribution's installation manual for more details about installing additional packages.
I just installed this package but can't find entries in the KDE/Gnome menus.	Some versions of the KDE or GNOME desktop environments may require that you restart your session for the changes to take effect.
I get a "Some options are not selected" error message while editing the printer settings.	Some printers have conflicting settings, meaning that some settings for two options can't be selected at the same time. When you change a setting and the Printer Package detects such a conflict, the conflicting option is changed to a "No Choice" value, and you have to choose an option that does not conflict before being able to submit the changes.
I can't make a printer the system default.	In some conditions, it may not be possible to change the default queue. This happens with some variants of LPRng, especially on recent RedHat systems that use the "printconf" database of queues. When using printconf, the /etc/printcap file is automatically refreshed from the database of printers managed by the system (usually through the "printtool" command), and the queues in /etc/printcap.local are appended to the resulting file. Since the default queue in LPRng is defined as the first queue in /etc/printcap, therefore it is not possible for the Linux Printer Package to change the default when some queues have otherwise been defined using printtool. LPD systems identify the default queue as the one named "lp". Thus, if there is already a queue by this name, and if it doesn't have an alias, then you won't be able to change the default. To work around this, you can either delete the queue or rename it by manually editing the /etc/printcap file.
The N-up setting does not work correctly for some of my documents.	The N-up feature is achieved through post-processing of the PostScript data that is being sent to the printing system. However, such post-processing can only be adequately achieved if the PostScript data conforms to the Adobe Document Structuring Conventions. Problems may arise when using N-up and other features relying on post-processing if the document being printed isn't compliant.

Problem	Possible Cause and Solution
I am using BSD lpr (Slackware, Debian, older distributions) and some options chosen in LLPR don't seem to take effect.	Legacy BSD lpr systems have a hard limitation on the length of the option string that can be passed to the printing system. As such, if you selected a number of different options, the length of the options may have exceeded and some of your choices won't be passed to the programmes responsible for implementing them. Try to select fewer options that deviate from the defaults, to save on memory usage.
I am trying to print a document in Landscape mode, but it prints rotated and cropped.	Most Unix applications that offer a Landscape orientation option in their printing options will generate correct PostScript code that should be printed as is. In that case, you need to make sure that you leave the LLPR option set to its default Portrait setting, to avoid unwanted rotations of the page that would result in cropped output.
Some pages come out all white (nothing is printed), and I am using CUPS.	If the data being sent is in Encapsulated PostScript (EPS) format, some earlier versions of CUPS (1.1.10 and before) have a bug preventing them from being processed correctly. When going through LLPR to print, the Printer Package will work around this issue by converting the data to regular PostScript. However, if your application bypasses LLPR and feeds EPS data to CUPS, the document may not print correctly.
I can't print to an SMB (Windows) printer.	To be able to configure and use SMB-shared printers (such as printers shared on a Windows machine), you need to have a correct installation of the SAMBA package that enables that feature. The "smbclient" command should be available and usable on your system.
My application seems to be frozen while LLPR is running.	Most Unix applications will expect a command like the regular "lpr" command to be non-interactive and thus return immediately. Since LLPR is waiting for user input before passing the job on to the print spooler, very often the application will wait for the process to return, and thus will appear to be frozen (its windows won't refresh). This is normal and the application should resume functioning correctly after the user exits LLPR.
How do I specify the IP address of my SMB server?	It can be specified in the "Add Printer" dialogue of the configuration tool, if you don't use the CUPS printing system. Unfortunately, CUPS currently doesn't allow to specify the IP address of SMB printers, so you will have to be able to browse the resource with SAMBA in order to be able to print.
Some documents come out as white pages when printing.	Some versions of CUPS, especially those shipped with Mandrake Linux before the 8.1 release, have some known bugs when processing PostScript output from some applications. Try upgrading to the latest version of CUPS (at least 1.1.14). Some RPM packages for most popular distributions are provided as a convenience with this Linux Printing Package.

Problem	Possible Cause and Solution
I have CUPS and some options (such as N-up) seem to be always enabled even though I don't pick them in LLPR.	There may be some local options defined in your ~/.lpoptions file, which is manipulated by the lpoptions command. These options will always be used if not overridden by LLPR settings. To get rid of all options for a printer, run the following command, replacing "printer" with the name of the queue: lpoptions -x printer
I configured a printer to print to a file, but I get "Permission denied" errors.	Most printing systems will not run as the super-user but as a special user (usually "lp"). Therefore, make sure that the file you have chosen to print to is accessible to the user owning the spooler daemon.
On my PCL (or SPL) printer, I sometimes get error messages printing instead of my document.	Unfortunately, some Unix applications may generate non-compliant PostScript output that may not be supported by Ghostscript, or even the printer itself in PostScript mode. You can try to capture the output to a file and view the results with Ghostscript (gv or ghostview will allow you to do so interactively) and see if you get error messages. However, since the application is fault at probably, contact your software vendor to inform them of the issue.
Some color images come out all black.	This a known bug in Ghostscript (until GNU Ghostscript version 7.05) when the base color space of the document is indexed color space and it is converted through CIE color space. Because Postscript uses CIE color space for Color Matching System, you should upgrade Ghostscript on your system to at least GNU Ghostscript version 7.06 or later. You can find recent Ghostscript versions at www.ghostscript. com.

8 Using Your Printer on a Network

If you work in a networked environment, the printer can be shared by other users on the network. ML-3561N, ML-3561ND and ML-3562W printers are network printers and can be connected to the network via direct attachment to an external print server.

This chapter includes:

- **About Sharing the Printer on a Network**
- **Setting Up a Network-Connected Printer**

NOTE: If you are a ML-3560 user, you need to install an optional network interface card. For details, see "Installing a Network Card or Serial Interface Card" on page 9.3.

About Sharing the Printer on a Network

If you work in a networked environment, you can connect your printer to the network.

Locally-Shared Printer

You can connect the printer directly to a selected computer, which is called the "host computer" on the network. The printer can then be shared by other users on the network through a Windows 9x/Me/NT 4.0/2000/XP/2003 network printer connection.

For details about sharing the printer locally, see the **Software User's Guide**.

Wired Network-connected Printer

The ML-3561N, ML-3561ND and ML-3562W printer come with a built-in network interface. For more information about connecting your printer to the network, see page 2.7.

To use a ML-3560 printer as a network printer, you need to install an optional network interface card in your printer. See page 9.3 for information about installing the card.

Wireless Network-connected Printer

The ML-3562W comes with a built-in wired and wireless network card.

To use your ML-3560, ML-3561N or ML-3561ND in a wireless network environment, you need to install an optional wired and wireless network interface card in your printer. See page 9.3.

Printing Across a Network

Whether the printer is locally connected or network-connected, you need to install the ML-3560 Series printer software on each computer that prints documents using the printer.

Setting Up a Network-Connected Printer

You can set up the network protocols on the printer to use it as your network printer. Setting protocols can be accomplished by using the supplied network program. Please refer to Network User's Guide.

You can configure the basic network parameters through the printer's control panel. Use the printer control panel to do the following:

- Print a Network Configuration page
- Enable or disable network protocols (AppleTalk, IPX/SPX)
- Configure TCP/IP
- Configure IPX frame types

Configuring Network Parameters on the Control Panel

Supported Operating Systems

NOTE: The operating systems supported by the network card may be different from the operating systems supported by the printer. The following table shows the network environments supported by the printer.

Item	Requirements
Network Interface	10/100 Base-TX (standard for ML-3561N, ML-3561ND and ML-3562W) or 802.11b Wireless LAN (standard for ML-3562W)
Network Operating System	• Novell NetWare 4.x, 5.x, 6.x • Windows 98/Me, NT 4.0/2000/XP/2003 • Unix, BSD4.3, HP-UX, SUN OS, SOLARIS, SCO • Linux Red Hat 8.0~9.0, Fedora Core 1~3, Mandrake 9.0~10.2, and SuSE 8.2~9.2 • Macintosh OS 8.6~9.2/10.1~10.3
Network Protocols	• IPX/SPX • TCP/IP(LPR,Standard TCP/IP printing,IPP,DHCP,BOOTP,SNMP,HTTP) • EtherTalk

•IPX/SPX: Internet Packet exchange/Sequenced Packet eXchange
•TCP/IP: Transmission Control Protocol/Internet Protocol
•DLC/LLC: Data Link Control/Logical Link Control
•DHCP: Dynamic Host Configuration Protocol
•BOOTP: Bootstrap Protocol

Printing a Network Configuration Page

The Network Configuration page shows how the network interface card on your printer is configured. The default settings enabled all parts which are suitable for most applications.

1. In ready mode, press the **Menu** button ( ) until you see "Network" on the bottom line of the display.
2. Press the **Enter** button ( ) to access the menu.
3. Press the scroll button (or) until "Print Net CFG" displays on the bottom line.
4. Press the **Enter** button ( ).

   The Network Configuration page prints out.

Setting Network Protocols

When you first install the printer, all supported network protocols are enabled when you turn the printer on. If a network protocol is enabled, the printer may actively transmit on the network even when the protocol is not in use. This may increase network traffic slightly. To eliminate unnecessary traffic, you can disable unused protocols.

1. In ready mode, press the **Menu** button ( ) until you see "Network" on the bottom line of the display. Press the **Enter** button ( ) to access the menu.
2. Press the **Enter** button ( ) when "Config Network" displays on the bottom line.
3. Press the scroll button (or) until "Yes" displays and press the **Enter** button ( ). Then press the **Upper Level** button ( ).
4. Press the scroll button (or) until you see the desired protocol on the bottom line.
5. Press the **Enter** button ( ).

   If you selected "AppleTalk," press the scroll button (or) to change the setting to "On" (enable) or "Off" (disable).
6. Press the **Enter** button ( ) to save the selection.
7. Press the **On Line/Continue** button ( ) to return to ready mode.

Configuring TCP/IP

Your printer can be set up on a variety of TCP/IP networks. There are several ways in which your printer can be assigned a TCP/IP address, depending on your network.

- Static Addressing: TCP/IP address is assigned manually by the network administrator.
- Dynamic Addressing BOOTP/DHCP (default): TCP/IP address is assigned automatically by the server.

Static Addressing

To enter the TCP/IP address from your printer's control panel, take the following steps:

1. In ready mode, press the **Menu** button ( ) until you see "Network" on the bottom line of the display. Press the **Enter** button ( ) to access the menu.
2. Press the **Enter** button ( ) when "Config Network" displays on the bottom line.
3. Press the scroll button (or) until "Yes" displays and press the **Enter** button ( ).
4. Press the **Upper Level** button ( ), then use the scroll button ( ).
5. Press the **Enter** button ( ) when "Config TCP" displays.
6. Press the scroll button (or) until "Yes" displays and press the **Enter** button ( ).
7. Press the **Upper Level** button ( ), then use the scroll button ( ).
8. Press the **Enter** button ( ) when "IP Get Method" displays.
9. Press the scroll button (or) until "Static" displays and press the **Enter** button ( ).
10. Press the **Upper Level** button ( ), then use the scroll button ( ).
11. Press the **Enter** button ( ) to access the IP Address menu.

    IP address consists of 4 bytes.

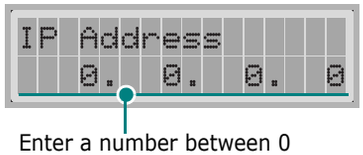

Enter a number between 0 and 255 for each byte.

12. Press the scroll button (or) to enter a number between 0 and 255 and press the **Enter** button ( ).
13. Repeat step 12 to complete the address from the 1st byte to the 4th byte.
14. To select other parameters, such as Subnet Mask or Gateway, press the **Upper Level** button ( ), then use the scroll button (or). Press the **Enter** button ( ).
15. Repeat steps 12 and 13 to configure the other TCP/IP parameters.
16. Press the **Upper Level** button ( ) to return to ready mode.

Dynamic Addressing (BOOTP/DHCP)

To assign the TCP/IP address automatically by the server, take the following steps:

1. In ready mode, press the **Menu** button ( ) until you see "Network" on the bottom line of the display. Press the **Enter** button ( ) to access the menu.
2. Press the **Enter** button ( ) when "Config Network" displays on the bottom line.
3. Press the scroll button (or) until "Yes" displays and press the **Enter** button ( ).
4. Press the **Upper Level** button ( ), then use the scroll button ( ).
5. Press the **Enter** button ( ) when "Config TCP" displays.
6. Press the scroll button (or) until "Yes" displays and press the **Enter** button ( ).
7. Press the **Upper Level** button ( ), then use the scroll button ( ).
8. Press the **Enter** button ( ) when "IP Get Method" displays.
9. Press the scroll button (or) until "DHCP" displays and press the **Enter** button ( ).
10. To assign the address from the BOOTP server, press the **Enter** button ( ) when "BOOTP" displays.
11. Press the **On Line/Continue** button ( ) to return to ready mode.

Configuring IPX Frame Types

On IPX/SPX protocol networks (for example, Novell NetWare), the format of network communication frames must be specified on the printer. In most cases, you can keep the default setting "**Auto**". However, you can manually set the frame type format, if required.

- **AUTO** (default): Automatically senses and limits the frame type to the first one detected.
- **EN_8023**: Limits the frame type to IPX over IEEE 802.3 frames. All others will be counted and discarded.
- **EN_II**: Limits the frame type to IPX over Ethernet Frames. All others will be counted and discarded.
- **EN_8022**: Limits the frame type to IPX over IEEE 802.2 with IEEE 802.3 frames. All others will be counted and discarded.
- **EN_SNAP**: Limits the frame type to IPX over SNAP with IEEE 802.3 frames. All others will be counted and discarded.

Note that the IPX/SPX protocol must be enabled in the **Netware** menu before you can configure frame types. See "Setting Network Protocols" on page 8.2.

Take the following steps to change the frame type format:

1. In ready mode, press the **Menu** button ( ) until you see "Network" on the bottom line of the display. Press the **Enter** button ( ) to access the menu.
2. Press the **Enter** button ( ) when "Config Network" displays on the bottom line.
3. Press the scroll button (or) until "Yes" displays on the bottom line. Press the **Enter** button ( ).
4. Press the **Upper Level** button ( ).
5. Press the scroll button (or) until "Netware" displays on bottom line. Press the **Enter** button ( ).
6. Press the scroll button (or) until "On" displays on the bottom line and press the **Enter** button ( ).
7. Press the **Upper Level** button ( ), then use the scroll button ( ).
8. Press the **Enter** button ( ) when "Config Netware" displays.
9. Press the scroll button (or) until "Yes" displays on the bottom line. Press the **Enter** button ( ).
10. Press the **Upper Level** button ( ), then use the scroll button ( ).
11. Press the **Enter** button ( ) when "IPX Frame Type" displays.
12. Press the scroll button (or) until you see the desired frame type and press the **Enter** button ( ).
13. Press the **On Line/Continue** button ( ) to return to ready mode.

Restoring the Network Configuration

You can return the network configuration to its default settings.

1. In ready mode, press the **Menu** button ( ) until you see "Network" on the bottom line of the display.
2. Press the **Enter** button ( ) to access the menu.
3. Press scroll button (or) until "Default Set" displays on the bottom line.
4. Press the **Enter** button ( ) to confirm the selection.

Rebooting the Network Interface Card

If you configured the "Netware" or "Config 802.11b" menu option, the printer will not recognize your change.

In this case, you can simply reboot the network interface card without turning your printer off and back on.

1. In ready mode, press the **Menu** button ( ) until you see "Network" on the bottom line of the display.

2 Press scroll button (◁ or ▷) until "Reset Network" displays on the bottom line.

3 Press the **Enter** button (⊛) to reboot the network interface card.

Configuring the Wireless Network

See the instructions supplied with the wireless network interface card.

You can easily configure the wireless network environments using the SetIP program in Windows. See the Wireless Network User's Guide.

To configure the wireless network settings:

1 In ready mode, press the **Menu** button (▤) until you see "Network Setup" on the top line of the display.

2 Press the scroll button (◁ or ▷) until "Configuration" displays on the bottom line.

3 Press the scroll button (◁ or ▷) until "Yes" displays on the bottom line. Press **Enter** button (⊛).

4 Press the scroll button (◁ or ▷) until "Config 802.11b" displays on the bottom line. Press **Enter**.

5 Press the scroll button (◁ or ▷) until "Yes" displays on the bottom line. Press **Enter** button (⊛).

You can configure the following items:

- **SSID**: When you select "Search List", the wireless network card on your printer searches for wireless networks in the area and shows the results on the list. Select a network on the list. You cannot change "Operation Mode" and "Channel".

  If you select "Custom", you can configure the wireless settings according to your needs and enter a name of up to 32 letters for your "Custom" setting. "SSID" is case sensitive, so you need to change it carefully. Using the scroll buttons, find the alphabet you want and press the **Enter** button (⊛) . When the cursor moves to the next input field, enter the following letters the same way you entered the first letter. After you entered the last letter of the name, press the **Enter** button (⊛) once again to save the ID. The way to enter the key number for the encryption key is the same as to enter letters.

- **Operation Mode**: "Ad-Hoc" mode allows the wireless devices to communicate directly with each other. This is the default operating mode for the print server.

  If your network uses an Access Point, you must reconfigure the operation mode to "Infra". "Infra" mode allows both wireless and cabled computers to send files to the printer through an Access Point.

  If you select "**Auto**", the print server selects the operation mode automatically according to the network cable's connection each time it boots up. If the network cable is detected, the print server enters "Ad-Hoc" mode; if not, enters "Infra" mode.

- **Channel**: This option is available in the "Ad-Hoc" mode only. In most cases, you will not need to change this setting. The print server will scan all available channels for the specified network and will adapt its channel to the one detected. Default setting is 10.

- **Authentication**: "Open System" or "Shared Key". The Samsung print server is not configured for network authentication (Open System). If required by your network, the proper authentication method must be configured on the print server.

- **Encryption**: "None", "64-bit WEP", or "128-bit WEP". Default setting is "None". If your network uses WEP encryption keys, you must configure the encryption keys. You can configure up to four keys. The active key must match the value and active key position (for example, Key 1) configured on other wireless devices.

- **Using Key**: Select the key to use in your network.

- **Key Type**: Select the key type of your network.

- **Key1**, **Key2**, **Key3**, **Key4**: Enter the key number for "Encryption". The number you can enter are as follows:

	Hexadecimal	Alphanumeric
64-bit WEP	10 digits	5 characters
128-bit WEP	26 digits	13 characters

9 Installing Printer Options

Your printer is a full-featured laser printer that has been optimized to meet most of your printing needs. Recognizing that each user may have different requirements, however, Samsung makes several options available to enhance the printer's capabilities.

This chapter includes:

- **Precautions When Installing Printer Options**
- **Installing Memory DIMM**
- **Installing a Network Card or Serial Interface Card**
- **Using the Hard Disk**
- **Installing an Optional Paper Tray**
- **Installing a Duplex Unit**

Precautions When Installing Printer Options

DISCONNECT THE POWER CORD:

Never remove the printer control board while the printer is plugged in.

To avoid the possibility of an electrical shock, always disconnect the power cord when installing or removing ANY internal or external printer option.

DISCHARGE STATIC ELECTRICITY:

The control board and internal printer options (Memory DIMM, Network and Serial Interface Cards, and Hard Disk) are sensitive to static electricity. Before installing or removing an internal option, discharge static electricity from your body by touching something metal, such as the metal back plate on any device plugged into a grounded power source. If you walk round before finishing installation, discharge any static electricity once again.

Installing Memory DIMM

Your printer has a dual in-line memory module (DIMM) slot. Use this DIMM slot to install more memory for the printer.

NOTE: Your printer has 32 MB of memory which can be expanded to 288 MB. Use only Samsung-approved 100 pin SDRAM DIMM, part numbers ML- 00MC (32 MB), or ML-00MD (288 MB). Contact your Samsung dealer.

1. Turn the printer power off and unplug all cables from the printer.
2. Remove the duplex-slot cover from the back of the printer. If you installed an optional duplex unit, remove it from the printer.

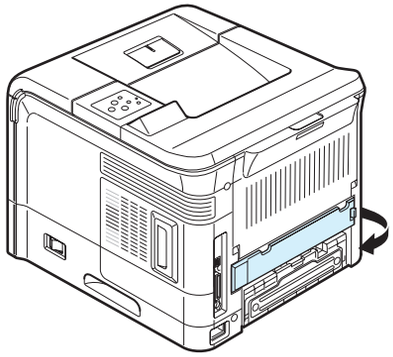

3 Hold the control board cover and remove it.

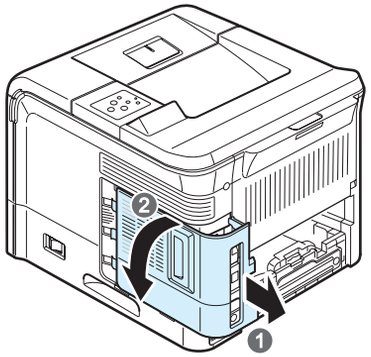

4 Completely open the latches on each side of the DIMM slot.

5 Remove the memory DIMM from its antistatic package. Locate the alignment notches on the bottom edge of the DIMM.

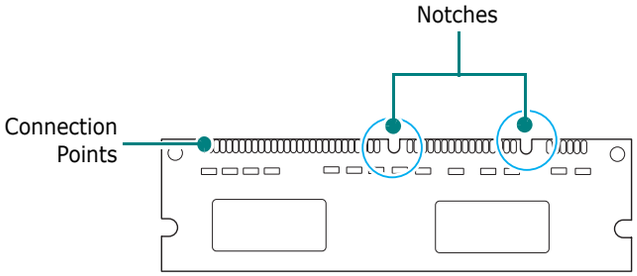

6 Holding the memory DIMM by the edges, align the notches on the memory DIMM with the grooves on the memory DIMM slot.

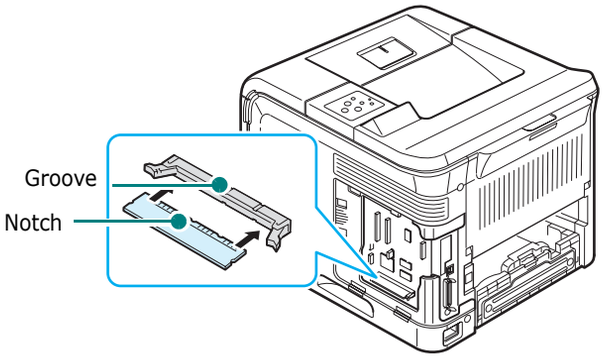

7 Push the DIMM straight into the DIMM slot until it snaps into place. Make sure the latches fit over the notches located on either side of the DIMM.

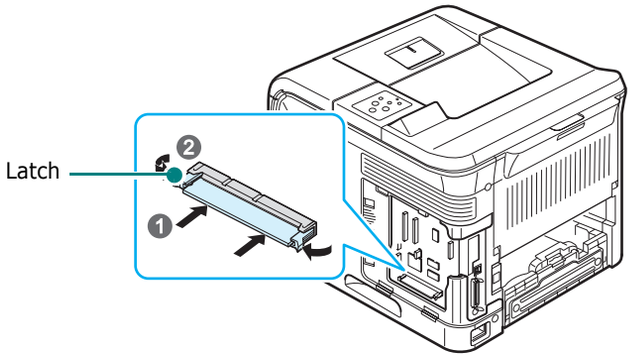

8 Replace the control board cover.

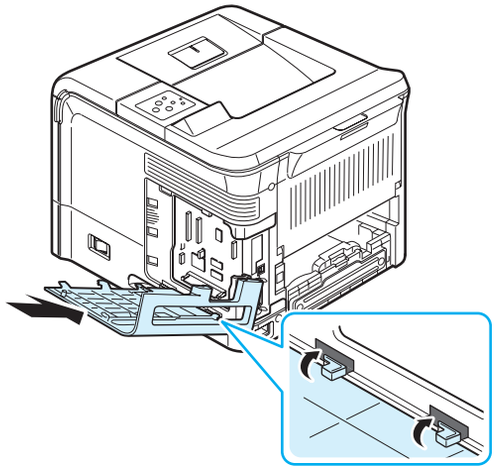

9 Reinstall the duplex-slot cover or the optional duplex unit.

10 Reconnect the power cord and printer cable, and turn the printer on.

After installing the memory DIMM, you need to select it in the printer properties of the PostScript printer driver so that you can use it with your printer:

1 Make sure that the PostScript printer driver is installed in your computer. To installing the PS printer driver, you need to selct **Custom** and put a check mark on the PS printer driver. For details, see the **Software User's Guide**.

2 Click the Window **Start** menu.

3 For Windows 95/98/Me/NT4.0/2000, select **Settings** and then **Print.ers**.

For Windows XP/2003, select **Printers and Faxes**.

4 Select the **Samsung ML-3560 Series PS** printer.

5 Click the right mouse button on the printer icon and select **Properties**.

6 For Windows 95/98/Me, select **Device Options** tab.

For Windows NT4.0/2000/XP/2003, select **Device Settings** tab.

7 Select the memory DIMM you installed in from **Printer Memory** in the **Installable Option** section and click **OK**.

For Windows 98, select **Installable Option** → **VMOption** → **change setting for:VMOption** → **change memory**.

Removing the Memory DIMM

1 Follow steps 1 and 3 on page 9.1 to access the control board.

2 Push the latches at both ends of the DIMM slot away from the DIMM. Pull out the DIMM.

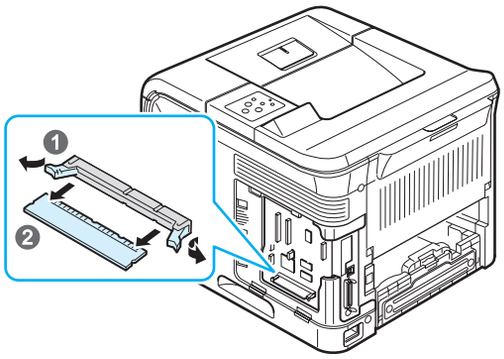

3 Place the DIMM in its original package or wrap it with a sheet of thin metal, such as aluminium foil, and store it in a box.

4 Follow from step 8 on page 9.2.

Installing a Network Card or Serial Interface Card

The procedure for installing a network interface card is the same as the procedure for installing a serial interface card.

Check to see if there are any missing parts in your optional network or serial interface card package.

ML-3560 only	ML-3560, ML-3561N, ML-3561ND	ML-3560, ML-3561N, ML-3561ND, ML-3562W
Ethernet 10/100 Base TX (Internal)	Ethernet 10/100 Base TX + 802.11b Wireless LAN (Internal)	Serial Interface Card
Order number: ??	Order number: ??	Order number: ??
Network interface Card, Network CD-ROM and Network Quick Guide 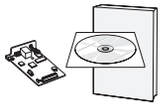	Wireless Network interface Card, Network CD-ROM, Network Quick Guide	Serial Interface Card 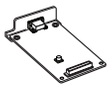

Tips for using the Network Interface Card

- The ML-3561N, ML-3561ND and ML-3562W comes with a built-in network interface card. The ML-3562W also has a network antenna which allows you to use a wireless LAN interface.
- If you use a ML-3560 user, you need to install an optional network interface card.
- If you want to use the printer in both wired and wireless network environments, you need to install an optional wired/wireless network interface card in both ML-3560, ML-3561N and ML-3561ND.
- When you purchase a wired/wireless network interface card, the antenna connected to the card may not be separated from the card, depending on your country.

Review the precautions on page 9.1 and then follow this procedure to install the network or serial interface card in your printer.

1 Turn the printer power off and unplug all cables from the printer.

2 Remove the duplex-slot cover from the back of the printer.

If you installed an optional duplex unit, remove it from the printer.

3 Hold the control board cover and remove it.

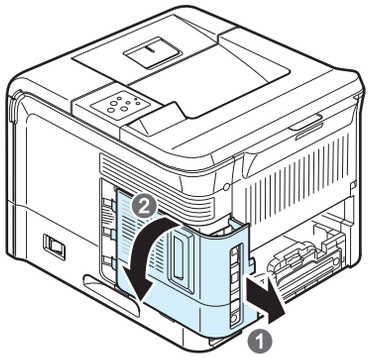

4 If you are replacing an existing network interface card with a new one or the serial interface card, remove the two screws and the old card.

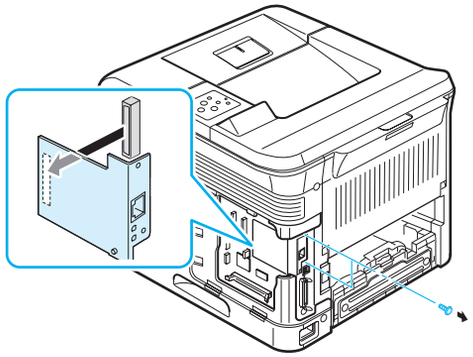

5 Align the connector on the network card with the connector on the control board. Make sure that the jacks on the card go through the holes. Push the card firmly into the connector on the control board until it is completely and securely in place.

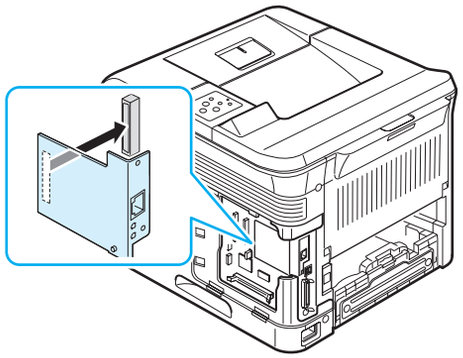

6 Tighten the two screws which you removed in step 4 or supplied with your new network card.

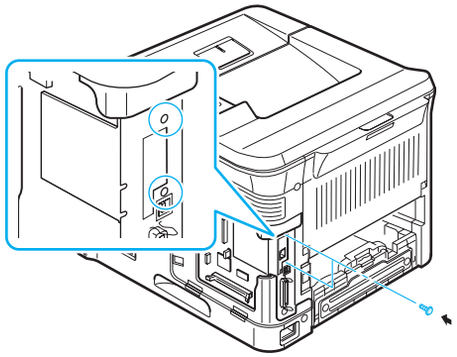

7 Replace the control board cover.

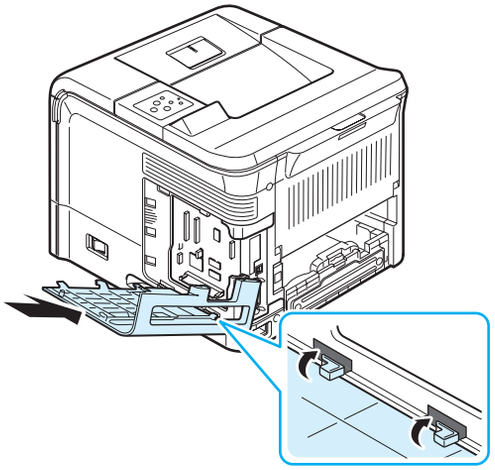

8 Reinstall the duplex-slot cover or the optional duplex unit.

9 Connect the network or serial cable, reconnect the power cord, and then turn the printer on.

NOTE:For information about configuring and using the printer on a network environment, refer to the Network User's Guide provided with the network interface card. You can also configure the network parameters on the control panel; see page 8.1.

Using the Hard Disk

Installing the hard disk allows the data from your computer to be sent to the print queue of the printer hard disk. This decreases the workload of the computer.

You can use various print features, such as storing a job in the hard disk, proofing a job, and printing private documents.

Installing the Hard Disk

1 Turn the printer off. Unplug the power cord and all of the cables.

2 Remove the duplex-slot cover from the back of the printer.

If you installed an optional duplex unit, remove it from the printer.

3 Hold the control board cover and remove it.

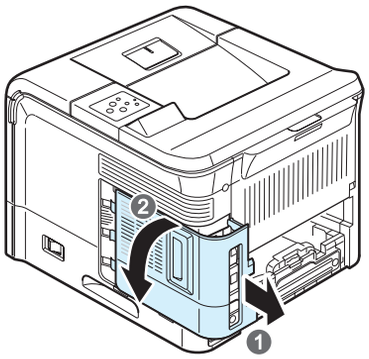

4 Insert the hard disk and push it in until it is latched into place.

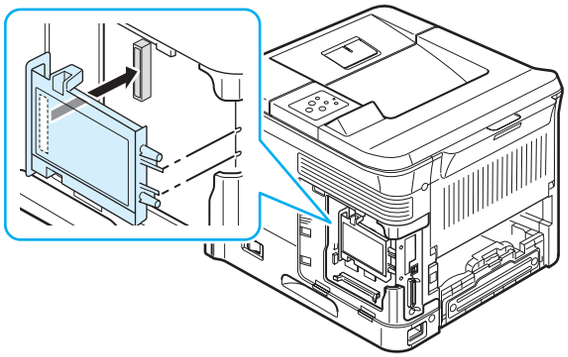

5 Fasten the four screws on the hard disk.

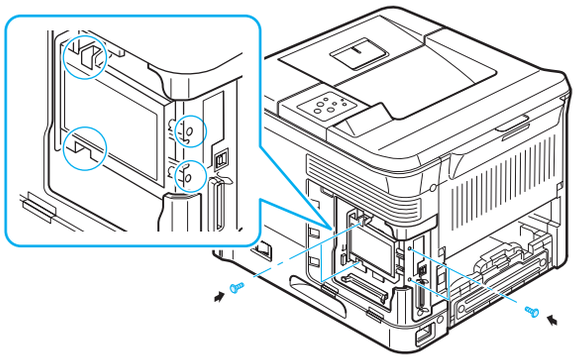

6 Replace the control board cover.

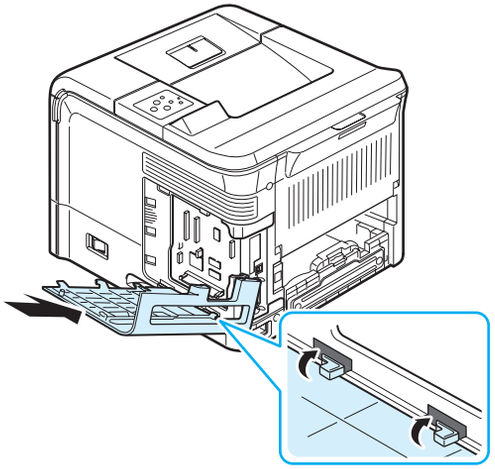

7 Reinstall the duplex-slot cover or the optional duplex unit.

8 Print a configuration page from the control panel to check if the hard disk is correctly installed. See page 6.1.

9 Now you need to set the hard disk in your printer driver. The procedure for setting the hard disk may differ depending on the selected printer driver.

Take the following steps:

1. Click the Windows **Start** menu.
2. For Windows 9x/Me/NT4.0/2000, select **Settings** and then **Printers**.

   For Windows XP/2003, select **Printers and Faxes**.
3. Select the **Samsung ML-3560 Series PCL 6** printer icon or **Samsung ML-3560 Series PS** printer icon.
4. Right-click on the printer icon and select **Properties**.
5. In PCL 6 Properties, click the **Printer** tab and then check **Optional Hard Disk Drive(HDD)**.

   In PS Properties, click the **Device Option** tab and set the **Printer Hard Disk** option to **Installed**.
6. Click **OK**.

Printing with the Optional Hard Disk

If you have the optional hard disk installed, you can use advanced printing features, such as storing or spooling a print job to the hard disk, proofing a job, and specifying of printing a private job in the printer properties window on your printer driver.

Once you stored files in the hard disk, you can easily reprint or delete the stored files using the control panel of your printer. You can also manage all of the print jobs in the print queue of the printer hard disk.

Setting the time and date

1 Press the **Menu** button ( ) on the control panel until "Setup" appears on the bottom line of the display.
2 Press the **Enter** button ( ) to access the menu.
3 When "Date & Timet" appears, press the **Enter** button ( ).
4 Press the scroll button (or) until the digit you want appears and press the **Enter** button ( ).
5 The cursor moves to the next position. Repeat step 4 until all digits appears correctly.
6 Press the **Enter** button ( ).

Storing a Job

You can store jobs in the installed hard disk.

1 Open the file you want to store.
2 Select **Printer** from the **File** menu. The Print window is displayed (It may look slightly different depending on your application.)
3 Click **Properties**. If you see **Setup**, **Printer** or **Options**, click the button instead.
4 Click the **Extra** tab and click **Print and Hold**.
5 Select the Print Mode you want from the drop-down list.
   - **Normal**: prints in mornal mode.
   - **Proof**: prints the first file and after a pause prints the next file.
   - **Confidential**: stores the files secured with a password.
   - **Store**: stores the file to the hard disk.
   - **Spool**: spools the file into the hard disk and prints it from the hard disk queue.
   - **Delay**: prints the file at a specified time.
6 Click **OK** until the Print window is displayed.
7 Click **OK** or **Print** to start printing.

Printing a Stored Job

You can print jobs currently stored in the hard disk.

1 Press the **Menu** button ( ) on the control panel until "Stored Job" appears on the bottom line of the display.
2 Press the **Enter** button ( ) to access the menu.
3 Press the scroll button (or) until the file name appears on the display and then press the **Enter** button ( ).
4 If the job is secured with a password, "Input PIN" displays. Press the **Enter** button ( ).
   You must enter the specified 4-digit password. Press the scroll button (or) to enter the first digit and press the **Enter** button ( ). The cursor automatically moves to the nxet digit position. Enter the 2nd, 3rd, and 4th digit in the same way.
5 When "Func Print" appears, press the **Enter** button ( ).
   If you enter incorrect password, "Input PIN" appears again. Reenter the correct password.
6 If you want to change the number of copies, press the **Enter** button ( ) when "Copies" appears on the display.
   If you installed the optional duplex unit and want to print on both sides of paper, press the **Enter** button ( ) when "Duplex" appears on the display. Select the binding edge.
7 When "Print Now" appears, press the **Enter** button ( ) to start printing.

Deleting a Stored Job

You can delete jobs currently stored in the hard.

1 Press the **Menu** button ( ) on the control panel until you see "Stored Job" appears on the bottom line of the display.
2 Press the **Enter** button ( ) to access the menu.
3 Press the scroll button (or) until the file name appears on the display and then press the **Enter** button ( ).
4 If the job is secured with a password, "Input PIN" displays. Press the **Enter** button ( ).
   You must enter the specified 4-digit password. Press the scroll button (or) to enter the first digit and press the **Enter** button ( ). The cursor automatically moves to the nxet digit position. Enter the 2nd, 3rd, and 4th digit in the same way.
5 Press the scroll button (or) until you see "Func Delete" on the display.
6 Press the **Enter** button ( ).
7 Press the scroll button (or) until you see "Yes" on the display.
8 Press the **Enter** button ( ).

Controlling the Active Job Queue

All of the print jobs waiting to be printed are listed in the Active Job Queue in the order you sent them to the printer. You can delete a job from the queue before printing, or promote a job to print sooner.

To delete a file from the queue:

1. Press the **Menu** button ( ).
   The first available menu item, "Active Job," appears on the bottom line of the display.
2. Press the **Enter** button ( ).
3. Press the scroll button (or) until the file name appears on the display and then press the **Enter** button ( ).
4. If the job is secured with a password, "Input PIN" displays. Press the **Enter** button ( ).
   You must enter the specified 4-digit password. Press the scroll button (or) to enter the first digit and press the **Enter** button ( ). The cursor automatically moves to the nxet digit position. Enter the 2nd, 3rd, and 4th digit in the same way.
5. Press the scroll button (or) until you see "Func Cancel" on the display.
6. Press the **Enter** button ( ).
   If you enter incorrect password, "Input PIN" appears again. Reenter the correct password.
7. Press the scroll button (or) until you see "On" on the display.
8. Press the **Enter** button ( ) to delete the selected file.

To promote a file from the queue:

You can select a job waiting in the Active Job Queue and change its print order so that it can be printed sooner.

1. Press the **Menu** button ( ).
2. Press the **Enter** button ( ) when "Active Job" displays on the bottom line of the display.
3. Press the scroll button (or) until the file name appears on the display and then press the **Enter** button ( ).
4. If the job is secured with a password, "Input PIN" displays. Press the **Enter** button ( ).
   You must enter the specified 4-digit password. Press the scroll button (or) to enter the first digit and press the **Enter** button ( ). The cursor automatically moves to the nxet digit position. Enter the 2nd, 3rd, and 4th digit in the same way.
5. Press the scroll button (or) until you see "Func Promote" on the display.
6. Press the **Enter** button ( ).
   If you enter incorrect password, "Input PIN" appears again. Reenter the correct password.

To print a file immediately:

You can print the print job you want immediately. In this case, the job currently printing is stopped and the selected job will be printed.

1. Press the **Menu** button ( ).
2. Press the **Enter** button ( ) when "Active Job" displays on the bottom line of the display.
3. Press the scroll button (or) until the file name appears on the display and then press the **Enter** button ( ).
4. If the job is secured with a password, "Input PIN" displays. Press the **Enter** button ( ).
   You must enter the specified 4-digit password. Press the scroll button (or) to enter the first digit and press the **Enter** button ( ). The cursor automatically moves to the nxet digit position. Enter the 2nd, 3rd, and 4th digit in the same way.
5. Press the scroll button (or) until you see "Func Release" on the display. The Select Function Release option appears only when you select Delay in the Print Mode option. See "Storing a Job" on page 9.6
6. Press the **Enter** button ( ).
   If you enter incorrect password, "Input PIN" appears again. Reenter the correct password.

Printing using the form files

1. In ready mode, press the scroll button (or) until you see "Setup" on the bottom line of the display. Press the **Enter** button ( ) to access the menu.
2. Press scroll button (or) until you see "Fixed Overlay" on the bottom line of the display. Press the **Enter** button ( ) to access the menu.
3. Select one among three menu "Off", "Single Form", "Double Form". Then, Press **Menu** button ( ).
4. Press the **Upper Level** button ( ).
5. If you selected "Single Form", press right button. Then you can see "Sel. 1st. Form" menu, and then press **Menu** button ( ).
6. Press the scroll button (or) until the form name appears on the display and then press the **Enter** button ( ).
7. Press the **Upper Level** button ( ).
8. If you selected "Double Form", press right button. Then you can see "Sel. 2nd. Form" menu, and then press **Menu** button ( ).

9 Press the scroll button (◁ or ▷) until the form name appears on the display and then press the **Enter** button (✱) for even page.

10 Press the **Upper Level** button (↺) to return to ready mode. If you selected "Single Form", the selected form will be applied to every page. If you selected "Double Form", 1st form will be applied to odd page and 2nd page will be even page.

Installing an Optional Paper Tray

You can increase the paper handling capacity of your printer by installing an optional Tray2. This tray holds 500 sheets of paper.

The optional paper tray consists of two components; the support unit and paper tray.

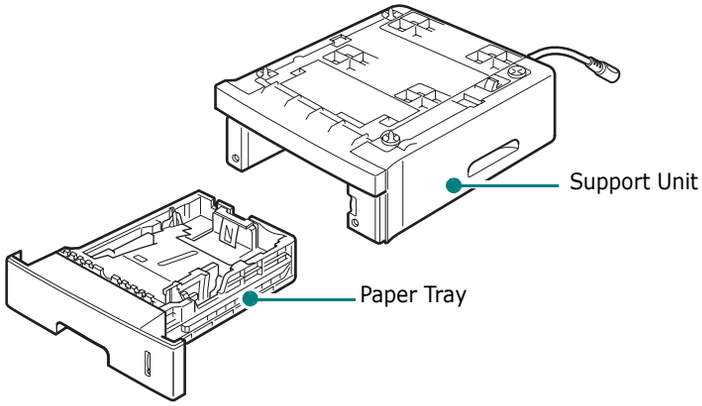

1 Turn off the printer and unplug all cables from the printer.

2 Remove the packing tape and the packing material inside of the tray.

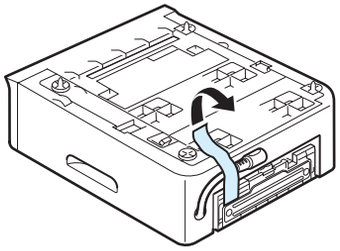

3 Find the location of the connector and the optional tray positioners.

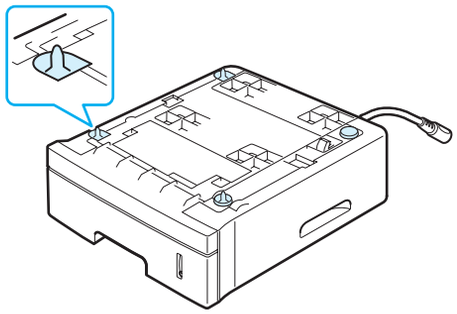

4 Place the printer over the tray, aligning the feet on the printer with the positioners on the optional tray.

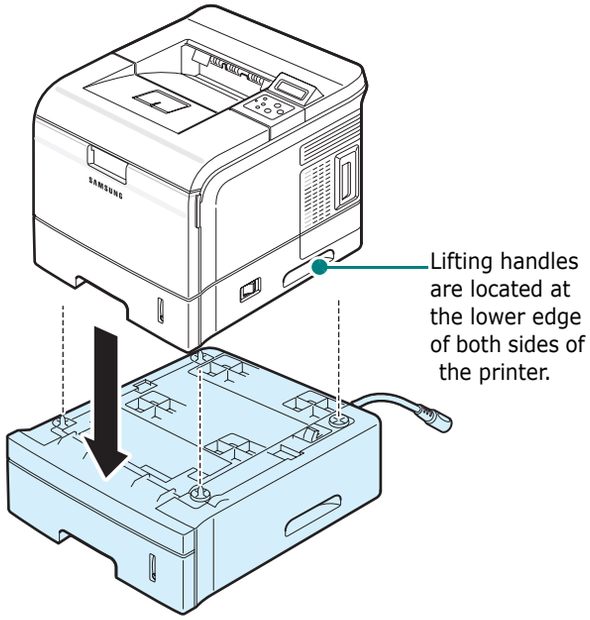

CAUTION: The printer weights 23kg including the toner cartridge and the tray. Use safe lifting and handling techniques. If you need to move the printer, it should be moved by two people. Use the lifting handles as shown in the diagram (see page 1.3). Back injury could result if a single person attempts to lift the printer.

5 Plug the tray's interface cable into the connector on the back of the printer.

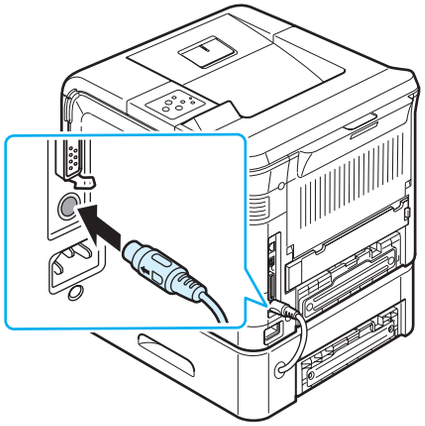

6 Load paper in the tray. The instructions for loading paper in the tray are same as for loading in the standard paper tray. See page 2.4.

7 Reconnect the power cord and cables and then turn the printer on.

CAUTION: Do not remove the standard tray from the printer while you are printing using the optional Tray2. If you do this, a paper jam may occur. Use the optional Tray2 with the standard tray.

After installing Tray 2, you must set the tray as installed in the printer properties window.

1 Click the Windows **Start** menu.

2 For Windows 9x/Me/NT4.0/2000, select **Settings** and then **Printers**.

For Windows XP/2003, select **Printers and Faxes**.

3 Select the **Samsung ML-3560 Series PCL 6** printer icon or **Samsung ML-3560 Series PS** printer icon.

4 Right-click on the printer icon and select **Properties**.

5 In PCL 6 Properties, click the **Printer**. Then select **Tray 2** from the **Optional Tray** drop-down list.

In PS Properties, click the **Device Option** tab and select **Installed** from the **Tray 2** drop-down list.

6 Click **OK**.

Installing a Duplex Unit

The printer can automatically print on both sides of a sheet of paper with an optional duplex unit. This is called duplexing. The optional duplex unit supports the following paper sizes: letter, legal, folio, and A4.

The duplex-slot cover that is located at the rear of the printer must be removed when the optional duplex unit is installed. When you use duplexing, the printer partially ejects the printed page into the top output bin, and then pulls it back to print the reverse side.

To install a duplex unit:

1 Turn the printer off and unplug all cables from the printer.

2 Remove the tape and all packing material from the duplex unit.

3 Remove the duplex-slot cover from the back of the printer.

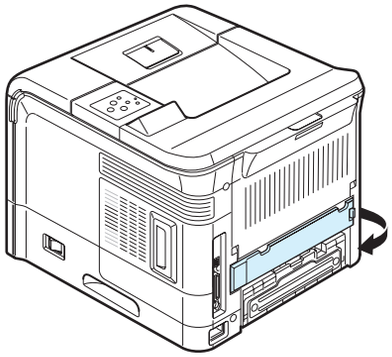

NOTE: Reinstall this cover when the duplex unit is not in use.

4 Insert the duplex unit all the way into the slot until it fits into place.

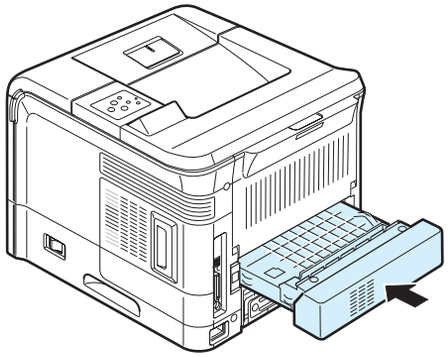

5 Reconnect the power cord and printer cable, and turn the printer on.

After installing the duplex unit, you must set the unit as installed in the printer properties window.

1 Click the Windows **Start** menu.

2 For Windows 9x/Me/NT4.0/2000, select **Settings** and then **Printers**.

For Windows XP/2003, select **Printers and Faxes**.

3 Select the **Samsung ML-3560 Series PCL 6** printer icon or **Samsung ML-3560 Series PS** printer icon.

4 Right-click on the printer icon and select **Properties**.

5 In PCL 6 Properties, click the **Printer** tab and check **Duplex Unit**.

In PS Properties, click the **Device Option** tab and select **Installed** from the **Duplex Unit** drop-down list.

6 Click **OK**.

Printing on Both Sides of Paper

After installing the duplex unit, you can print on both sides of paper. Before printing, decide how you want your document oriented.

The options are:

- **Long Edge**, which is the conventional layout used in book binding.
- **Short Edge**, which is the type often used with calendars.

NOTES:

- Do not print on both sides of labels, transparencies, envelopes, or thick paper. Paper jamming and damage to the printer may result.
- To use double-sided printing, you can use only the following paper sizes: A4, Letter, Legal, and Folio, with a weight of 20~24lbs (75~90g/m^2).

There are two ways to enable or disable the double-sided printing:

Using the Control Panel Menu

You can use the **Duplex** item in the **Layout** menu for double-sided printing. After setting the item, set the **Duplex Margin** item in the same menu, if necessary.

For further details about using the control panel menu, see page 3.3.

From the Software Application

You can use the printer properties window on your printer driver. For details, see the **Software User's Guide**.

10 Specifications

This chapter includes:

- **Printer Specifications**
- **Paper Specifications**

Printer Specifications

Item	Specifications and Description
Print Speed*	Up to 33 PPM (A4); 35 PPM (Letter) Duplex: Up to 23 IPM (A4); 24 IPM (Letter)
Resolution	Up to 1200 x 1200 dpi effective output
First Printing Time	Standby mode: 10 seconds Sleep mode: 40 seconds
Warm-up Time	30 seconds
Power Rating	AC 100 ~ 127 V (USA, Canada) / 220 ~ 240 V (Others), 50 / 60 Hz
Power Consumption	550 W average during operation Less than 20 W in power-save mode
Acoustic Noise**	Stand by: Less than 35 dB Operating: Less than 55 dB
Toner Supply	Single cartridge
Toner Cartridge Life***	12,000 Pages (for starter, 6,000 Pages) ISO 19752 (LSA 5% coverage)
Duty Cycle	Monthly: 150,000 pages maximum
Weight	Gross: 21 Kg (46.3 lb) Net: 17 Kg (37.5 lb)
Package Weight	Paper: 2.5 Kg, Plastic: 0.6 Kg
External Dimensions (W x D x H)	396 (W) x 453 (D) x 353 (H) mm / 15.6 x 17.8 x 13.9 in. (without options)
Operating Environment	Temperature: 10 ~ 32 °C / 50 ~ 90 °F Humidity: 20 ~ 80 % RH
Emulation	PCL 6****, PostScript 3, IBM ProPrinter, EPSON

Item	Specifications and Description
Random Access Memory (RAM)	32 MB (Max 288 MB) 16, 32, 64, 128, or 256 MB optional memory available Use only the Samsung-approved DIMM.
Fonts	1 bitmap, 45 scalable, 136 PS3 fonts
Interface Switching	Automatic (Parallel, USB, Network)
Interface	• IEEE 1284 Bidirectional Parallel Standard - Modes supported: Compatible, Nibble, Byte, ECP • USB Interface Standard - USB 2.0 compliant - 480 Mbps 1 port • Network Interface - 10/100 Base TX (option for ML-3560) - 802.11b Wireless LAN (option for ML-3560, ML-3561N andML-3561ND) • Serial Interface (option)
OS Compatibility *****	Windows 95/98/Me/NT 4.0/2000/XP/2003, Various Linux OS including Red Hat, Caldera, Debian, Mandrake, Slackware, SuSE, and Turbo Linux, Mac 8.6~9.2/10.1~10.3
Options	ML-3560: Duplex unit, 500-sheet tray, Ethernet 10/100 Base TX, Ethernet 100 Base TX + 802.11a/b/g wireless LAN, Serial board, Hard disk ML-3561N: Duplex unit, 500-sheet tray, Ethernet 100 Base TX + 802.11a/b/g wireless LAN, Serial board, Hard disk ML-3561ND: 500-sheet tray, Ethernet 100 Base TX + 802.11a/b/g wireless LAN, Serial board, Hard disk ML-3562W: Duplex unit, 500-sheet tray, Serial board, Hard disk

** Print speed will be affected by operating system used, computing performance, application software, connection method, media type, media size, and job complexity.*
***Sound pressure Level, ISO7779*
****The number of pages may be affected by operating environment, printing interval, media type, and media size.*
*****Compatible with PCL6 Version 2.1*
******Please visit www.samsungprinter.com to download the latest software version.*

Paper Specifications

Overview

Your printer accepts a variety of print materials, such as cut-sheet paper (including up to 100% recycled fiber content paper), envelopes, labels, transparencies, and custom-size paper. Properties, such as weight, composition, grain, and moisture content, are important factors affecting the printer's performance and the output quality. Paper that does not meet the guidelines outlined in this User's Guide can cause the following problems:

- Poor print quality
- Increased paper jams
- Premature wear on the printer.

NOTES:

- Some paper may meet all of the guidelines in this guide and still not produce satisfactory results. This may be the result of improper handling, unacceptable temperature and humidity levels, or other variables over which Samsung has no control.
- Before purchasing large quantities of paper, ensure that the paper meets the requirements specified in this User's Guide.

CAUTION: Using paper that does not meet these specifications may cause problems, requiring repairs. These repairs are not covered by the Samsung warranty or service agreements.

Supported Sizes of Paper

Tray1/ Tray2	Dimensions*	Weight	Capacity**
Letter	216 x 279 mm (8.5 x 11 in.)	60 to 105 g/ m^2 bond (16 to 28 lb)	500 sheets of 75 g/m^2 bond paper
A4	210 x 297 mm (8.3 x 11.7 in.)		
Executive	191 x 267 mm (7.25 x 10.5 in.)		
Legal	216 x 356 mm (8.5 x 14 in.)		
B5 (JIS)	182 x 257 mm (7.2 x 10 in.)		
B5 (ISO)	176 x 250 mm (6.9 x 9.8 in.)		
Folio	216 x 330 mm (8.5 x 13 in.)		
A5	148 x 210 mm (5.8 x 8.3 in.)		
A6	105 x 148 mm (4.1 x 5.8 in.)		
Oficio	216 x 343 mm (8.5 x 13.5 in.)		

Multi-purpose Tray	Dimensions *	Weight	Capacity**
Minimum Size (custom)	76 x 127 mm (3 x 5 in.)	60 to 163 g/ m^2 bond (16 to 43 lb)	100 sheets of 75 g/m^2 bond paper
Maximum Size (custom)	216 x 356mm (8.5 x 14 in.)		
Transparency	Same minimum and maximum paper sizes as listed above.	Thickness: 0.10 x 0.14 mm (0.0039 x 0.0055 in.)	50 typical
Labels***		Thickness: 0.10 x 0.14 mm (0.0039 x 0.0055 in.)	25 typical
Envelopes		up to 90 g/ m^2 (16 to 24 lb)	up to 10

** The printer supports a wide range of media sizes. See "Printing on Card Stock or Custom-sized Materials" on page 4.9.*
***Capacity may vary depending on media weight and thickness, and environmental conditions.*
****Smoothness: 100 to 250 (Sheffield)*

NOTE: You may experience jams when using print materials with a length of less than 127 mm (5.0 in.). For optimum performance, ensure that you are storing and handling the paper correctly. Please refer to "Printer and Paper Storage Environment" on page 10.4.

Guidelines for Using Paper

For the best result, use conventional 75 g/m^2 (20 lb) paper. Ensure that the paper is of good quality, and free of cuts, nicks, tears, spots, loose particles, dust, wrinkles, voids, and curled or bent edges.

If you are unsure of what type of paper you are loading, such as bond or recycled paper, check the label on the package.

The following problems may cause print quality deviations, jamming or even damage to the printer.

Symptom	Problem with Paper	Solution
Poor print quality or toner adhesion, problems with feeding	Too moist, too rough, too smooth or embossed; faulty paper lot	Try another kind of paper, between 100 ~ 250 Sheffield, 4 ~ 5 % moisture content.
Dropout, jamming, curl	Stored improperly	Store paper flat in its moisture-proof wrapping.
Increased gray background shading/printer wear	Too heavy	Use lighter paper, open the rear output tray.
Excessive curl problems with feeding	Too moist, wrong grain direction or short-grain construction	• Open the rear output tray. • Use long-grain paper.
Jamming, damage to printer	Cutouts or perforations	Do not use paper with cutouts or perforations.
Problems with feeding	Ragged edges	Use good quality paper.

NOTES:

- Do not use letterhead paper printed with low-temperature inks, such as those used in some types of thermography.
- Do not use raised or embossed letterhead.
- The printer uses heat and pressure to fuse toner to the paper. Insure that any colored paper or preprinted forms use inks that are compatible with this fusing temperature (195 °C or 383 °F for 0.1 second).

Paper Specifications

Category	Specifications
Acid Content	5.5 ~ 8.0 pH
Caliper	0.094 ~ 0.18 mm (3.0 ~ 7.0 mils)
Curl in Ream	Flat within 5 mm (0.02 in.)
Cut Edge Conditions	Cut with sharp blades with no visible fray.
Fusing Compatibility	Must not scorch, melt, offset, or release hazardous emissions when heated to 195 °C (383 °F) for 0.1 second.
Grain	Long Grain
Moisture Content	4 % ~ 6 % by weight
Smoothness	100 ~ 250 Sheffield

Paper Output Capacity

Output Tray	Capacity
Face-down top output tray	250 sheets of 75 g/m^2 bond paper
Face-up rear output tray	100 sheet of 75 g/m^2 bond paper

Printer and Paper Storage Environment

Paper storage environmental conditions directly affect the feed operation.

Ideally, the printer and paper storage environment should be at or near room temperature, and not too dry or humid. Remember that paper is hygroscopic; it absorbs and loses moisture rapidly.

Heat works with humidity to damage paper. Heat causes the moisture in paper to evaporate, while cold causes it to condense on the sheets. Heating systems and air conditioners remove most of the humidity from a room. As paper is opened and used, it loses moisture, causing streaks and smudging. Humid weather or water coolers can cause the humidity to increase in a room. As paper is opened and used it absorbs any excess moisture, causing light print and dropouts. Also, as paper loses and gains moisture it can become distorted. This can cause paper jams.

Care should be taken not to purchase more paper than can be used in a short time (about 3 months). Paper stored for long periods may experience heat and moisture extremes, which can cause damage. Planning is important to prevent damage to large supplies of paper.

Unopened paper in sealed reams can remain stable for several months before use. Opened packages of paper have more potential for environment damage, especially if they are not wrapped with a moisture-proof barrier.

The paper storage environment should be properly maintained to ensure optimum printer performance. The required condition is 20° to 24°C (68° to 75°F), with a relative humidity of 45% to 55%. The following guidelines should be considered when evaluating the paper's storage environment:

- Paper should be stored at or near room temperature.
- The air should not be too dry or too humid.
- The best way to store an opened ream of paper is to rewrap it tightly in its moisture-proof wrapping. If the printer environment is subject to extremes, unwrap only the amount of paper to be used during the day's operation to prevent unwanted moisture changes.

Envelopes

Envelope construction is critical. Envelope fold lines can vary considerably, not only between manufacturers, but also within a box from the same manufacturer. Successful printing on envelopes depends upon the quality of the envelopes. When selecting envelopes, consider the following components:

- Weight: The weight of the envelope paper should not exceed 90 g/m^2 (24 lb) or jamming may occur.
- Construction: Prior to printing, envelopes should lie flat with less than 6 mm (0.25 in) curl, and should not contain air.
- Condition: Envelopes should not be wrinkled, nicked, or otherwise damaged.
- Temperature: You should use envelopes that are compatible with the heat and pressure of the printer.
- Size: You should only use envelopes within the following size ranges.

	Minimum	Maximum
Multi-purpose Tray	76 x 127 mm (3 x 5 in)	216 x 356 mm (8.5 x 14 in)

NOTES:

- Use only the Multi-purpose Tray to print envelopes.
- You may experience some paper jams when using any media with a length less than 127 mm (5.0 in). This may be caused by paper that has been affected by environmental conditions. For optimum performance, make sure you are storing and handling the paper correctly. Please refer to "Printer and Paper Storage Environment" on page 10.4.

Envelopes with Double Side Seams

Double side-seams construction has vertical seams at both ends of the envelope rather than diagonal seams. This style may be more likely to wrinkle. Be sure the seam extends all the way to the corner of the envelope as illustrated below.

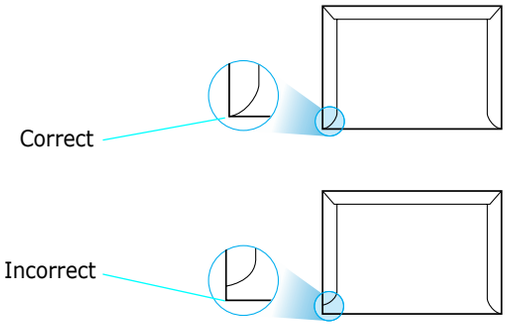

Envelopes with Adhesive Strips or Flaps

Envelopes with a peel-off adhesive strip or with more than one flap that folds over to seal must use adhesives compatible with the heat and pressure in the printer. The extra flaps and strips might cause wrinkling, creasing, or even jams and may even damage the fuser.

Envelope Margins

The following gives typical address margins for a commercial #10 or DL envelope.

Type of Address	Minimum	Maximum
Return address	15 mm (0.6 in.)	51 mm (2 in.)
Delivery address	51 mm (2 in.)	89 mm (3.5 in.)

NOTES:

- For best print quality, position margins no closer than 15 mm (0.6 in) from the edges of the envelope.
- Avoid printing over the area where the envelope's seams meet.

Envelope Storage

Proper storage of envelopes helps contribute to print quality. Envelopes should be stored flat. If air is trapped in an envelope, creating an air bubble, then the envelope may wrinkle during printing. See "Printing on Envelopes" on page 4.6.

Labels

CAUTIONS:

- To avoid damaging the printer, use only labels recommended for laser printers.
- To prevent serious jams, always use the Multi-purpose Tray to print labels and always use the rear output tray.
- Never print on the same sheet of labels more than once and never print on a partial sheet of labels.

When selecting labels, consider the quality of each component:

- Adhesives: The adhesive material should be stable at 195 °C (383 °F), the printer's fusing temperature.
- Arrangement: Only use labels with no exposed backing between them. Labels can peel off sheets with spaces between the labels, causing serious jams.
- Curl: Prior to printing, labels must lie flat with no more than 13 mm (0.5 in) of curl in any direction.
- Condition: Do not use labels with wrinkles, bubbles, or other indications of separation.

See "Printing on Labels" on page 4.7.

Transparencies

Transparencies used in the printer must be able to withstand 140 °C (284 °F), the printer's fusing temperature.

CAUTION: To avoid damaging the printer, use only transparencies recommended for use in laser printers.

See "Printing on Transparencies" on page 4.8.

INDEX

Index will be updated!!!!!!!!

A
antenna, connect 2.7

C
card stock, print 4.9
clean
    inside 6.9
    outside 6.9
cleaning sheet, print 6.10
components 1.3
configuration page, print 6.1
connect
    Ethernet 2.7
    network antenna 2.7
    parallel 2.6
    power cord 2.7
    USB 2.6
control panel 3.1
    buttons 3.2
    display 3.1
    menus 3.3
custom-sized materials, prnt 4.9

D
demo page, print 2.7
display language, change
    control panel 2.8
duplex unit, install 9.9

E
envelopes, print 4.6
error messages 7.10
Ethernet cable, print 2.7

F
face down output tray 4.5
face up output tray 4.5
features
    printer 1.1

H
hard disk
    install 9.5
    use 9.6

I
install
    printer options 9.1

L
labels, print 4.7
Linux
    common problems 7.13
load, paper
    in the Multi-Purpose Tray 4.2
    in the Tray1/optional Tray 2 2.4
    using the manual feed 4.4

M
Macintosh
    common problems 7.12
manual feed mode, use 4.4
memory DIMM, install 9.1
Multi-Purpose Tray, use 4.2

N
network antenna, connect 2.7
network interface card, install 9.3
network printing
    cable/antenna, connect 2.6
    card, install 9.3
    network-connected printer, set 8.1
    parameters, configure 8.1

O
option 9.1
option, install
    duplex unit 9.9
    hard disk 9.5
    memory DIMM 9.1
    network interface card 9.3
    paper tray 2 9.8, 9.9
    serial interface card 9.3
optional tray, install 9.8
output location, select 4.5

P
paper
    choose 4.1
    load 2.4
    sizes and capacities 4.1
    specifications 10.2
paper jam
    around the toner cartridge 7.6
    in the duplex area 7.7
    in the paper exit area 7.7
    in the paper feed area
        Multi-Purpose Tray 7.6
        optional Tray 2 7.4, 7.5
        Tray 1 7.4
    tips for avoiding 7.8

paper level bar 4.2
Paper size, change in the tray 3.4
parallel cable, connect 2.6
PostScript driver
    errors 7.13
preprinted paper, print 4.8
print quality problems, solve 7.8
printing
    configuration page 6.1
    demo page 2.7
printing problems 7.2
problem, solve
    checklist 7.1
    error messages 7.10
    general 7.2
    Linux 7.13
    Macintosh 7.12
    paper jams 7.4
    print quality 7.8
    PS errors 7.13
    Windows 7.12

Q

quality problems, solve 7.8

R

rear output tray, use 4.5

S

software
    overview 2.8
specification
    paper 10.2
    printer 10.1

T

toner cartridge
    install 2.2
    maintain 6.2
    redistribute 6.2
    replace 6.3
top output tray, use 4.5
transparencies, print 4.8
Tray 1, use 2.4
turn on, printer 2.7

U

unpack 2.1
USB cable, connect 2.6