Dell™ Laser Multi-Function Printer 1815n/1815dn

Owner's Manual

Look Inside For:

- Preparing Your Multi-Function Printer
- Understanding the Software
- Loading Print Media
- Using Your Multi-Function Printer
- Maintenance
- Troubleshooting
- Installing Options
- Contacting Dell

Temporary

www.dell.com | support.dell.com

Ordering Supplies

Dell™ toner cartridges are available only through Dell. You can order toner cartridges online at www.dell.com/supplies or premier.dell.com: Dell's secure, customizable, procurement, and support site for its larger relationship customers.

USA	877-INK-2-YOU
Austria	08 20 - 24 05 30 35
Belgium	02.713 1590
Canada	877-501-4803
Colombia	01800-9-155676
Denmark	3287 5215
Finland	09 2533 1411
France	0825387247
Germany	0800 2873355
Ireland	1850 707 407
Italy	800602705
Luxembourg	02.713 1590
Mexico	866-851-1754
Netherlands	020 - 674 4881
Norway	231622 64
Portugal	21 4220710
Puerto Rico	866-851-1760
Spain	902120385
Sweden	08 587 705 81
Switzerland	0848 335 599
UK	0870 907 4574

NOTE: *If your country is not listed,* contact your Dell distributor to order supplies.

Toner cartridge	Part number
Dell Standard Capacity Toner Cartridge[a]	NF485
Dell High Capacity Toner Cartridge	RF223

a. Dell Standard Capacity Toner Cartridge life is 3,000 pages and Dell High Capacity Toner Cartridge life is 5,000 pages.

Notes, Notices, and Cautions

NOTE: A **NOTE** indicates important information that helps you make better use of your printer.

NOTICE: A **NOTICE** indicates either potential damage to hardware or loss of data and tells you how to avoid the problem.

CAUTION: A CAUTION indicates a potential for property damage, personal injury, or death.

Information in this document is subject to change without notice.
© 2006 Dell Inc.. All rights reserved.

Reproduction in any manner whatsoever without the written permission of Dell Inc. is strictly forbidden.

Trademarks used in this text: *Dell*, *DELL* logo, *Dell ScanCenter* and *Dell Toner Management System* are trademarks of Dell Inc.; *Microsoft* and *Windows* are registered trademarks of Microsoft Corporation.; PaperPort® is a registered trademark of ScanSoft, Inc.; Adobe® and PhotoShop® are registered trademarks of Adobe Systems Incorporated.

Other trademarks and trade names may be used in this document to refer to either the entities claiming the marks and names of their products. Dell Inc. disclaims any proprietary interest in trademarks and trade names other than its own.

Model Laser MFP 1815n/1815dn

June 2006 SRV Rev. A00

Contents

Understanding Your Multi-Function Printer **13**
Front View 13
Rear View 15

CAUTION: SAFETY INFORMATION **17**

1 Preparing Your Multi-Function Printer

Unlocking the Scanner **19**

Using the Operator Panel **20**
Common Keys 20
Key Pad 20

Dell Laser MFP 1815n/1815dn Menu Functions **21**

Changing the Display Language **22**

Setting Up Faxing **22**
Setting the Printer ID 22
Using the Number Keypad to Enter Characters 23
Setting the Time and Date 24
Storing a Number for Speed Dialing 25
Setting Group Dial 25

Preparing Networking **26**
Attaching Cables 26
Printing the Network Configuration Page 27

2 Understanding the Software

Software Overview **29**

Installing Dell Software For Local Printing **30**
Windows XP: 30
Windows 2000: 31
Windows 98: 31
Windows Me: 32

Assigning an IP Address **32**

Installing Dell Software For Network Printing 33

Uninstalling Software 34

3 Loading Print Media

Print Media Guidelines 35

Loading Paper 38

Using the Paper Tray 38

Using the Bypass Tray 41

Setting the Paper Size and Type 45

Setting the Paper Size 45

Setting the Paper Type 45

Placing Documents on the Scanner Glass 46

Loading Documents Into the ADF 47

4 Using Your Multi-Function Printer

Printing 49

Printing in Windows 49

Printing in Macintosh 49

Printing in Linux 49

Copying 50

Knowing Copy Menu 50

Setting the Basic Copy Options 50

Making Copies 51

Special Copy Features 52

Selecting a Paper Tray 53

Printing Copies on Both Sides of Paper 53

Changing the Default Settings 53

Scanning 54

Knowing Scan Menu 55

Scanning to an Application 55

Scanning Using Network Scan 56

Scanning to the USB Memory Key 58

Scanning Using the Windows Image Acquisition (WIA) Driver 60

Scanning and Sending an Email 61

Faxing **62**
Knowing Fax Menu 62
Setting the Basic Fax Options 62
Sending a Fax Automatically 63
Sending a Fax Manually 64
Receiving a Fax 64
Forwarding Faxes to E-mail Addresses 65
Setting up the Fax System 65
Using Fax Features 67
Printing Reports 68
Using Advanced Fax Features 68
Using an Answering Machine 69
Using a Computer Modem 70

5 Maintenance

Replacement Parts **71**
Replacing the ADF Rubber Pad 71

Ordering Supplies **73**

Replacing the Toner Cartridge **74**

Cleaning Your Multi-Function Printer **76**
Cleaning the Exterior 76
Cleaning the Interior 76
Cleaning the Scanner 77
Cleaning the Drum 78

6 Troubleshooting

Clearing Jams in the ADF **79**

Clearing Jams in the Paper Paths **81**
Paper Feed Jam (tray 1) 81
Paper Feed Jam (optional tray 2) 82
Bypass Tray Jam 83
Fuser Area Jam 84
Paper Exit Jam 85
Duplex Jam (Dell Laser MFP 1815dn only) 87
Tips for Avoiding Paper Jams 90

More Troubleshooting **90**

7 Installing Options

Precautions When Installing Printer Accessories **91**

Installing Printer Memory **91**

Activating the Added Memory in the PS Printer Properties 93

Installing an Optional Tray 2 . . . . . **94**

Activating the Installed Optional Tray 2 in the Printer Properties 96

8 Contacting Dell

Technical Assistance **97**

Automated Order-Status Service **98**

Contacting Dell **98**

9 Appendix

U.S. Terms and Conditions of Sale **109**

Limited Warranties and Return Policy **111**

Limited Warranty for Dell-Branded Hardware Products (U.S. Only) 111

"Total Satisfaction" Return Policy (U.S. Only) 114

Limited Warranty Terms for Dell-Branded Hardware Products (Canada Only) 115

Dell Return Policy (U.S. Only) 118

"Total Satisfaction" Return Policy (Canada Only). 119

Dell Software and Peripherals (Canada Only) 119

Limited Warranty for Dell-Branded Tape Media (U.S. and Canada Only) . . . 120

1-Year End-User Manufacturer Guarantee (Latin America and the Caribbean Only). 120

Angreskjema For Norske Forbrukere 122

Dell™ Printer Consumables Limited Warranties **124**

Consumables Limited Warranty (U.S. and Canada Only). 124

Consumables Limited Warranty (Latin America Only) 124

Dell™ Software License Agreement **125**

Limited Warranty 126

U.S. Government Restricted Rights 126

General 127

Regulatory Notices **127**
FCC Notices (U.S. Only). 128
IC Notice (Canada Only) 129
CE Notice (European Union) 130
ENERGY STAR® Compliance 131
Recycling Information. 131
Waste Electrical and Electronic Equipment (WEEE) Directive 131
NOM Information (Mexico Only). 132

Index 133

Understanding Your Multi-Function Printer

Front View

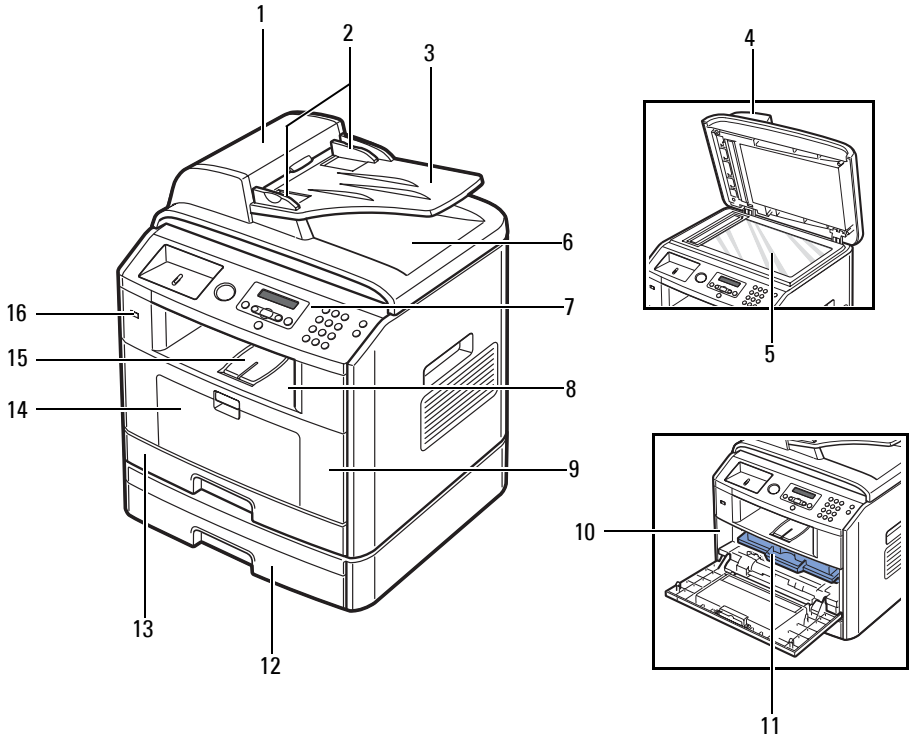

#	Use the:	When you want to:
1	Automatic Document Feeder (ADF)	Load the document for copying, scanning, or sending faxes.
2	Document Width Guides	Ensure proper document feeding.
3	Document Input Tray	Load the document for copying, scanning or sending faxes.
4	Document Cover	Open to place a document on the scanner glass.
5	Document Glass	Place a document on the scanner glass for copying, scanning or sending faxes.

#	Use the:	When you want to:
6	Document Output Tray	Hold the document as it exits the ADF.
7	Operator Panel	Operate the printer.
8	Output Tray	Hold paper as it exits the front of the printer.
9	Front Cover	Access the toner cartridge.
10	Express Service Code	Identify your printer when you use support.dell.com or contact technical support. Enter the Express Service Code to direct your call when contacting technical support. The Express Service Code is not available in all countries.
11	Toner Cartridge	Use the toner cartridge.
12	Optional Tray 2	Load paper into the optional Tray 2.
13	Tray 1	Load paper into the standard Tray 1.
14	Bypass tray	Load print media one sheet at a time.
15	Paper Output Extension	Keep print media from falling off the front output tray.
16	USB Memory Port	Insert the USB memory key.

Rear View

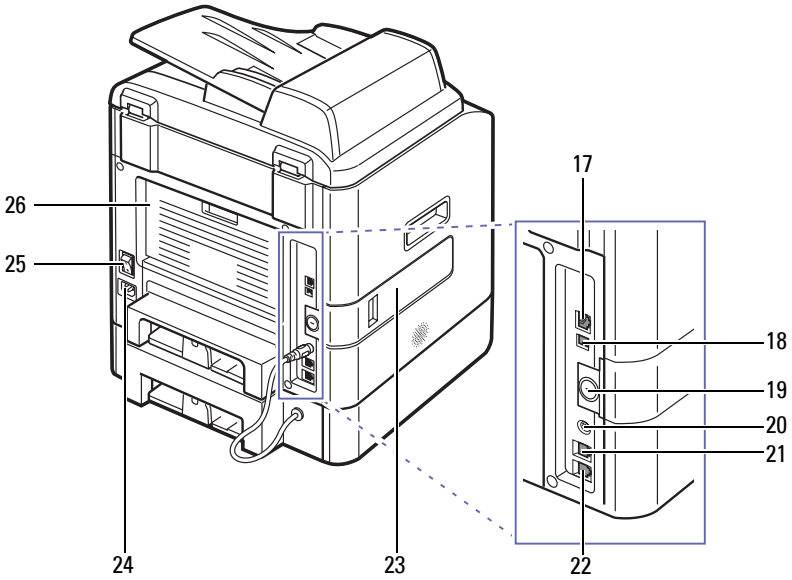

#	Use the:	When you want to:
17	Network Port	Connect the printer to the network port.
18	USB Port	Insert the USB cable.
19	Locking Unit Slot	Prevent the installed memory card from being remove.
20	Optional Tray 2 Cable Connector	Connect the optional Tray 2 to your printer.
21	Telephone Line Socket (Line)	Connect the telephone line to your printer.
22	Extension Telephone Socket (EXT)	Connect additional devices, such as a telephone or answering machine, to the printer (Optional). If the phone communication is serial in your country (such as Germany, Sweden, Denmark, Austria, Belgium, Italy, France and Switzerland), remove the plug from the extension telephone socket (EXT) (☎) and insert the supplied terminator.
23	Control Board Cover	Open to install the optional memory card.
24	Power Receptacle	Supply power to the printer.
25	Power Switch	Supply power to the printer.
26	Rear Cover	Open to remove the paper jams and use the rear output slot when you print the documents from the manual feeder.

⚠ CAUTION: SAFETY INFORMATION

Use the following safety guidelines to help ensure your own personal safety and to help protect your system and working environment from potential damage.

- Your product uses a laser.

⚠ **CAUTION: Use of controls or adjustments or performance of procedures other than those specified herein may result in hazardous radiation exposure.**

- Your product uses a printing process that heats the print media, and heat can cause certain media to release emissions. You must understand the section in your operating instructions that discusses the guidelines for selecting appropriate print media to avoid the possibility of harmful emissions.

⚠ **CAUTION: If your product is not marked with this symbol ⧈, it must be connected to an electrical outlet that is properly grounded.**

- The power cord must be connected to an electrical outlet that is near the product and easily accessible.
- Refer service or repairs, other than those described in the operating instructions, to a professional service person.
- This product is designed to meet safety standards with the use of specific Dell-authorized components. The safety features of some parts may not always be obvious. Dell disclaims liability associated with use of non-Dell-authorized components.

⚠ **CAUTION: Do not use this product during a lightning storm.**

1

Preparing Your Multi-Function Printer

Unlocking the Scanner

1 Remove the label completely from the scanner module by gently pulling it. The scan unlock switch automatically moves FORWARD to the unlock position.

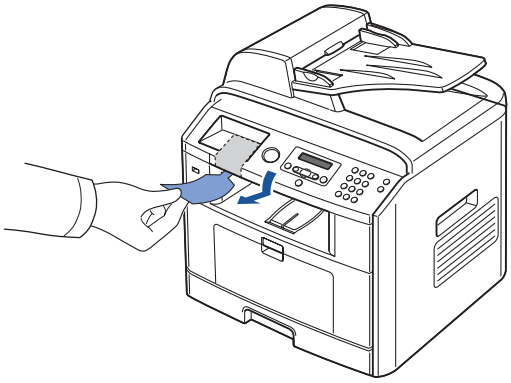

NOTE: To confirm the scanner is unlocked, open the scanner cover and make sure the blue latch is in the unlocked ( ) position. If the latch is not in the unlocked position, reach under the operator panel and pull it forward.

NOTE: When you are moving the printer or do not intend to use it for a long period of time, move the switch BACKWARD to the lock position, as shown. To scan or copy a document, the switch must be unlocked.

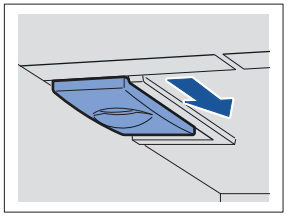

Using the Operator Panel

If you have not already done so, follow the steps on the *Setup Diagram* (poster) to complete the hardware installation.

Use the printer operator panel to scan, copy, and fax.

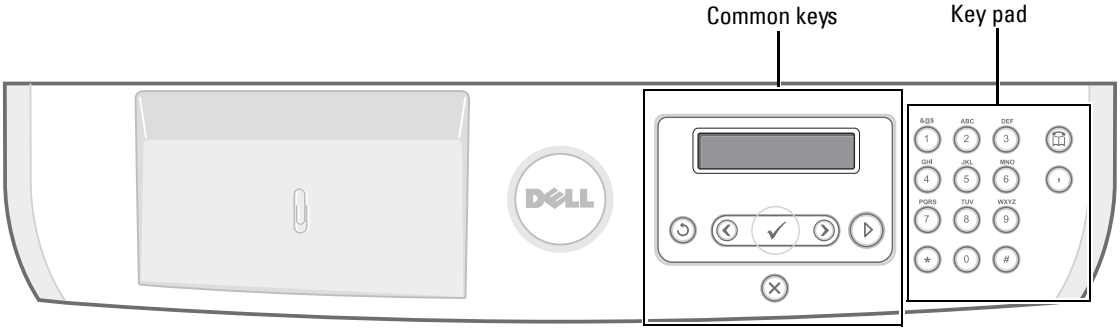

Common Keys

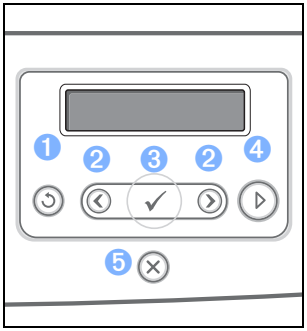

Press:	To:
1	Return to the upper menu.
2	Scroll through available options.
3	Confirm the selection on the display.
4	Start a job.
5	Stop an operation at any time, or return to main menu.

Key Pad

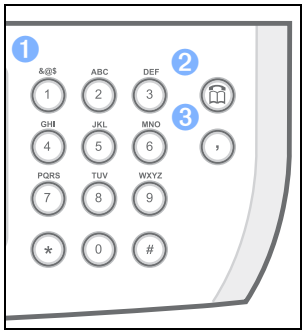

Press:	To:
1	Dial/Enter number or enter alphanumeric characters.
2	Store frequently used fax numbers in memory or search for stored fax numbers or email addresses. It also allows you to print a Phonebook list.
3	Insert a pause into a fax number in edit mode.

Dell Laser MFP 1815n/1815dn Menu Functions

1. Paper Setting	2. Copy Defaults		3. Fax Defaults
Paper Size	# of Copies	Quality	Contrast
Paper Type	Zoom	Select Tray	Resolution
	Contrast	Duplex	Ring to Answer

3. Fax Defaults		4. Scan Defaults	5. Advanced Fax
Receive Mode	Auto Reduction	Image Size	Send Forward
Redial Delay	Discard Size	File Format	Rcv Forward
Redial Attmpts	Receive Code	Resolution	Toll Save
MSG Confirm	DRPD Mode	Netscan Tm-out	Junk Fax Setup
Auto Report	Duplex		

5. Advanced Fax		6. Directory	7. Reports
Secure Receive	Cover Page	PhoneBook	Phone Book
Prefix Dial	Modem Speed	Email	Sent Report
Stamp Rcvd Name	Rcv Disable		RCV Report
ECM Mode			System Data

7. Reports	8. Email setup		9. Network CFG
Scheduled Jobs	SMTP Server	Default Subj	Configuration
MSG Confirm	User Setup	Email Forward	Clear Settings
Junk Fax List	Send to Self	Passcode Protect	Print Sys. Data
Scan Journal	Default From	Change Passcode	
Email Report			

10.Sound/Volume	11. Machine Setup		
Speaker	Machine ID	Power Save	Select Country
Ringer	Date&Time	Timeout	Global Access
Button	Clock Mode	CCD Power Save	Import Setting
Alarm Sound	Language	Toner Save	Export Setting

12. Maintenance
Clean Drum
Clear Settings

1 Press **Scroll** (◁ or ▷) to highlight **Menu** and press **Select** (✓).

2 Press **Scroll** (◁ or ▷) to highlight the desired setting.

3 Press **Select** (✓) or select the displayed setting.

Changing the Display Language

To change the displayed language that the operator panel displays, follow these steps:

1 Press **Scroll** (◁ or ▷) to highlight **Menu** and press **Select** (✓).

2 Press **Scroll** (◁ or ▷) to highlight **Machine Setup** and press **Select** (✓).

3 Press **Scroll** (◁ or ▷) to highlight **Language** and press **Select** (✓).

4 Press **Scroll** (◁ or ▷) to display the language you want.

The available languages are English, French, German, Italian, Spanish, Czech, Iberian Portuguese, Dutch, Polish, Norwegian, Swedish, Finish, Danish and Russian.

5 Press **Select** (✓) to save the selection.

6 Press **Cancel** (⊗) to return to Standby mode.

Setting Up Faxing

Setting the Printer ID

In most countries, you are required by law to indicate your fax number on any fax you send. The printer ID, containing your telephone number and name or company name, will be printed at the top of each page sent from your printer.

1 Press **Scroll** (◁ or ▷) to highlight **Menu** and press **Select** (✓).

2 Press **Scroll** (◁ or ▷) to highlight **Machine Setup** and press **Select** (✓).

3 Press **Select** (✓) to access **Machine ID**.

4 Enter your fax number using the number keypad.

NOTE: *If you make a mistake while entering numbers,* press the left **Scroll** (◁) button to delete the last digit.

5 Press **Select** (✓) when the number on the display is correct. The display asks you to enter the ID.

6 Enter your name or company name using the number keypad.

7 You can enter alphanumeric characters using the number keypad, including special symbols by pressing the 1 button.

For details on how to use the number keypad to enter alphanumeric characters, see "Using the Number Keypad to Enter Characters" on page 23.

8 Press **Select** (✓) when the name on the display is correct.

9 Press **Cancel** (⊗) to return to Standby mode.

Using the Number Keypad to Enter Characters

As you perform various tasks, you may need to enter names and numbers. For example, when you set up your printer, you enter your name or your company's name and telephone number. When you store fax numbers in memory, you may also enter the corresponding names.

- When prompted to enter a letter, press the appropriate button until the correct letter appears on the display.
- For example, to enter the letter **O**, press the **6** button.
- Each time you press the **6** button, the display shows a different letter, **M**, **N**, **O** and finally **6**.
- To enter additional letters, repeat the above step.
- Press the **1** button repeatedly to enter a space, and also press the **1** button to enter special characters.
- Press **Select** (✓) when you are finished.

Keypad Letters and Numbers

Key	Assigned Numbers, Letters or Characters
1	1 @ . space , / * # & $ + - ‘
2	A B C 2
3	D E F 3
4	G H I 4
5	J K L 5
6	M N O 6
7	P Q R S 7
8	T U V 8
9	W X Y Z 9
0	0

Changing Numbers or Names

If you make a mistake while entering a number or name, press the left **Scroll** (◁) button to delete the last digit or character. Then enter the correct number or character.

Inserting a Pause

For some telephone systems, it is necessary to dial an access code and listen for a second dial tone. A pause must be entered in order for the access code to function. For example, enter the access code **9** and then press **Pause** (⊙) before entering the telephone number. A "–" appears on the display to indicate when a pause is entered.

Setting the Time and Date

The time and date are printed on all faxes.

NOTE: You may need to change the correct time and date *if loss of power to the printer occurs*.

To set the time and date:

1 Press **Scroll** (◁ or ▷) to highlight **Menu** and press **Select** (✓).

2 Press **Scroll** (◁ or ▷) to highlight **Machine Setup** and press **Select** (✓).

3 Press **Scroll** (◁ or ▷) to highlight **Date&Time** and press **Select** (✓).

4 Enter the correct time and date using the number keypad.

Month= 01 ~ 12

Day= 01 ~ 31

Year= 1990 ~ 2089

Hour= 01 ~ 12 (12-hour mode)
00 ~ 23 (24-hour mode)

Minute= 00 ~ 59

You can also use **Scroll** (◁ or ▷) to move the cursor under the digit you want to correct and enter a new number.

5 To select **AM** or **PM** for 12-hour format, press the ✱ or the # button.

When the cursor is not under the **AM** or **PM** indicator, pressing the ✱ or the # button immediately moves the cursor to the indicator.

You can change the clock mode to 24-hour format (e.g. 01:00 PM as 13:00).

6 Press **Select** (✓) when the time and date on the display is correct.

NOTE: The printer beeps and does not allow you to proceed to the next step *if a wrong number is entered*.

Storing a Number for Speed Dialing

1 Press **Directory** ( ) on the operator panel.

OR

Press **Scroll** (or) to highlight **Fax** and press **Select** ( ).

OR

Press **Scroll** (or) to highlight **Menu** and press **Select** ( ).

Press **Scroll** (or) to highlight **Directory** and press **Select** ( ).

2 Press **Scroll** (or) to highlight **PhoneBook** and press **Select** ( ).

3 Press **Scroll** (or) to highlight **Add Person** and press **Select** ( ).

4 Enter a name and press **Select** ( ). For details about how to enter names, see "Using the Number Keypad to Enter Characters" on page 23.

5 Enter a one, two or three-digit speed dial number between 1 and 399, using the number keypad and press **Select** ( ).

Or select the location by pressing **Scroll** (or) and then press **Select** ( ).

6 Enter the fax number you want to store using the number keypad and press **Select** ( ).

To insert a pause between numbers, press **Pause** ( ) and a "–" appears on the display.

7 To store more fax numbers, repeat steps 3 through 6.

OR

To return to Standby mode, press **Cancel** ( ).

Setting Group Dial

1 Press **Directory** ( ) on the operator panel.

OR

Press **Scroll** (or) to highlight **Fax** and press **Select** ( ).

OR

Press **Scroll** (or) to highlight **Menu** and press **Select** ( ).

Press **Scroll** (or) to highlight **Directory** and press **Select** ( ).

2 Press **Scroll** (or) to highlight **PhoneBook** and press **Select** ( ).

3 Press **Scroll** (or) to highlight **Add Group** and press **Select** ( ).

4 Enter a name and press **Select** ( ).

5 Enter a group number between 1 and 199 and press **Select** ( ).

Or select the location you want by pressing **Scroll** (or) and then press **Select** ( ).

6 Enter a one, two or three-digit speed number you want to assign to the group and press **Select** (✓).

Or select the location by pressing **Scroll** (◁ or ▷) and then press **Select** (✓).

7 At the Add Another? prompt, press **Select** (✓) to enter other speed dial numbers into the group.

Or, press **Scroll** (◁ or ▷) to display **No** and press **Select** (✓) when you have entered all of the desired numbers.

8 *If you want to assign another group,* repeat from step 3.

OR

To press **Cancel** (✕) to return to Standby mode.

Preparing Networking

A print server is any designated computer that centrally manages all client print jobs. If you are sharing your printer in a small workgroup environment and want to control all print jobs on the network, follow these instructions to attach the printer to a print server.

NOTE: For additional network set-up configurations, see the *User's Guide*.

Attaching Cables

1 Make sure the printer is powered off and unplugged.

2 Connect one end of a standard category 5 Unshielded Twisted Pair (UTP) network cable into a LAN drop or hub, and the other end into the Ethernet network port on the back of the printer. The printer automatically adjusts for the network speed.

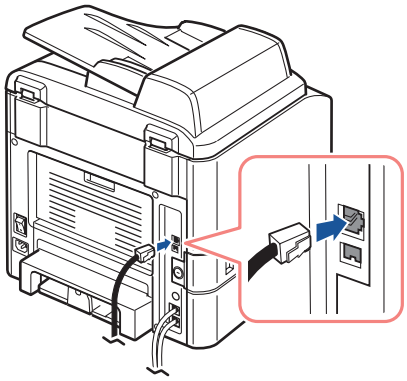

3 Connect one end of the printer power cord into the socket at the back of the printer and the other end into a properly grounded outlet. Press the switch to power on the printer.

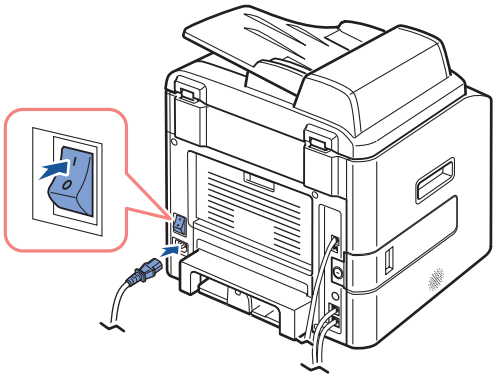

4 **Warming Up Please Wait** appears on the display indicating that the printer is now on.

If not, make sure the power cord is firmly plugged in to the back of the printer and the electrical outlet.

If the printer is on but does not print, power off the printer and wait 30 seconds. Power on the printer again, and it should reset and show **Warming Up Please Wait**.

Printing the Network Configuration Page

The Network Configuration page shows how the network interface card on your printer is configured.

1 Press **Scroll** (◁ or ▷) to highlight **Menu** and press **Select** (✓).

2 Press **Scroll** (◁ or ▷) to highlight **Network CFG** and press **Select** (✓).

3 Press **Scroll** (◁ or ▷) to highlight **Print Sys. Data** and press **Select** (✓).

The first available menu item, **Yes** displays on the bottom line.

4 Press **Select** (✓) to print a Network Configuration page.

If the Network Configuration pages is not printed:

– Make sure the Ethernet cable is firmly plugged into the back of the printer.

– Plug the Ethernet cable into another wall outlet.

5 Under the "TCP/IP" heading on the Network Configuration page, make sure the IP address, Subnet mask, and Gateway are what you expected.

6 Ping the printer and verify that it responds. For example, at a command prompt on a network computer, type **ping** followed by the new printer IP address:

   ping xxx.xxx.xxx.xxx

   If the printer is active on the network, you may receive a reply.

   If your printer does not respond, or if the IP address is not what you expected, assign the IP address you want. See "Assigning an IP Address" on page 32.

Use the Dell Printer Configuration Web Tool, also known as the Printer Embedded Web Server, to monitor the status of your network printer without leaving your desk. You can view and/or change the printer configuration settings, monitor toner level, and when it is time to order replacement toner cartridges, just click the Dell supplies link right from your Web browser.

NOTE: The Dell Printer Configuration Web Tool is not available when the printer is locally attached to a print server.

To launch the Dell Printer Configuration Web Tool, type the network printer IP address in your Web browser, and the printer configuration appears on the screen. See the *User's Guide* for more information.

You can set up the Dell Printer Configuration Web Tool to send you an email when the printer needs supplies or intervention.

To set up email alerts:

1 Launch the Dell Printer Configuration Web Tool.
2 Click **Email Alert Setup**.
3 Type your name or the key operator's name in the email list box to be notified.
4 Click **Submit**.

2

Understanding the Software

Software Overview

After setting up your printer and connecting it your computer, install the drivers and utilities from the *drivers and utilities CD* included with your printer. If you purchased a Dell ™ computer and your printer at the same time, the drivers and utilities are automatically installed. You don't need to install them. The *drivers and utilities CD* contains the following:

- Dell Printer Drivers- enables your computer to communicate with your printer. To use your printer as a printer in Windows, you must install the printer driver(s). For information about installing the printer drivers in Windows, see "Installing Dell Software For Local Printing" on page 30.
- Dell Printer Configuration Web Tool- enables you to monitor the status of your network printer without leaving your desk.
- Printer Settings Utility- enables you to set up fax phonebook and the printer's other options from your computer desktop. It also allows you to update the printer firmware. You can also configure the scan destination application that is launched when you access **Scan** and then **PC** menu.
- Dell Toner Management System™- displays the status of the printer and the name of the job when you send a job to print. The Dell Toner Management System window also displays the level of toner remaining and allows you to order replacement toner cartridges.
- PaperPort- enables you to scan documents, create PDFs, and turn your scanned images into editable Microsoft Word, Excel, or text files. PaperPort provides improved scanning features and supports annotations on all image types. PaperPort's enhanced search feature allows you to find items by specific item properties.
- Dell ScanCenter- This is the front-end that enables you to quickly scan documents into a variety of applications, such as e-mail, photo editors, and text editors.
- Scan Driver- TWAIN or Windows Image Acquisition (WIA) drivers are available for scanning documents on your printer.
- User's Guide- HTML documentation provides detailed information about using your printer.
- Set IP- Use this program to set your printer's TCP/IP addresses. For details about this program, see the Network Printer User's Guide on the network utilities CD.
- PS driver- Postscript Printer Description (PPD) file. You can use the PostScript driver to print documents.
- Network Scan- enables you to scan a document on your printer and save it to a network-connected computer.
- PC-Fax/Network-Fax- enables you to send a fax from your computer.
- Linux driver- enables you to print and scan in a Linux environment.

- Macintosh printer driver- enables you to use your printer with a Macintosh computer.

Installing Dell Software For Local Printing

A local printer is a printer attached to your computer using a USB cable. If your printer is attached to a network instead of your computer, skip this step and go to "Installing Dell Software For Network Printing" on page 33.

NOTE: If you attach a USB printer cable while your printer and computer are powered on, the Windows hardware wizard launches immediately. Cancel the screen and use the *drivers and utilities CD* to install the Dell software.

1 Make sure that the printer is connected to your computer and powered on. Close all unnecessary programs.

   NOTE: If the printer is not connected to your computer when you install the CD-ROM, the No Printer Found screen appears. Follow the instructions to install the software.

2 Insert the *drivers and utilities CD*.

3 If required, press the **Language** button to select a language.

4 Select **Personal Installation** and click **Next**.

5 Select **Typical Installation** to install the *User's Guide*, the printer drivers, scanner driver and PaperPort as the default settings.

   To install selected software including the printer Postscript driver, select **Custom Installation**. You can change the destination folder.

6 When the installation is complete, print a test page. Click **Finish** and close the wizard. You are now ready to print.

If you did not cancel the hardware wizards, refer to the following instruction for installing the printer driver for your operating system.

Windows XP:

1 Make sure that the printer is connected to your computer and powered on.

2 When the hardware wizard screen appears, insert the *drivers and utilities CD* and click **Next**.

   NOTE: For each wizard that appears, select Recommended, click Next, select CD-ROM Drives, and then click Next through the wizard screens.

3 The scanner driver is automatically loaded first from **D:\1815\Scan\WINXP2K\p3scan.inf**, where "D" is your CD drive.

4 Click **Next**.

5 Click **Finish**, and a second hardware wizard appears. The printer driver is automatically loaded from **D:\1815\Printer\GDI\WinXP\delr1.inf**, where "D" is your CD drive.

6 Click **Next**, and then click **Finish**.

Windows 2000:

1 Make sure that the printer is connected to your computer and powered on.

2 When the hardware wizard screen appears, insert the *drivers and utilities CD* and click **Next**.

NOTE: For each wizard that appears, select Search for a suitable driver for my device (Recommended), click Next, select CD-ROM Drives, and then click Next through the wizard screens.

3 The scanner driver is automatically loaded first from **D:\1815\Scan\WINXP2K\p3scan.inf**, where "D" is your CD drive.

4 Click **Next**.

5 Click **Finish**, and a second hardware wizard appears. The printer driver is automatically loaded from **D:\ delr1.inf**, where "D" is your CD drive.

6 Click **Next**, and then click **Finish**.

Windows 98:

1 Make sure that the printer is connected to your computer and powered on.

2 When the hardware wizard screen appears, insert the *drivers and utilities CD* and click **Next**.

3 Select **Search for the best driver for your device (Recommended)**, and click **Next**.

4 Select **Specify a Location**, and then click **Browse**.

5 Select **D:\USB**, where "D" is your CD drive.

6 Click **OK**, and then click **Next** three times. The driver installs.

7 Click **Finish**, and a second wizard appears.

8 If the CD menu screen appears above the wizard, click **Add New Hardware Wizard** from the Windows taskbar.

9 Click **Next**. **Search for the best driver for your device (Recommended)** is selected.

10 Click **Next**. **D:\USB** is selected.

11 Click **Next** two times. The driver installs.

12 Click **Finish**, and a third hardware wizard appears.

13 Click **Next**. **Search for the best driver for your device (Recommended)** is selected.

14 Click **Next**, click **Browse**, select the location **D:\1815\Scan\WIN98ME**, and click **OK**.

15 Click **Next** two times. The driver installs.

16 Click **Finish**.

Windows Me:

1 Make sure that the printer is connected to your computer and powered on. When the hardware wizard screen appears, **Automatic search for a better driver for your device (Recommended)** is selected.

2 Insert the *drivers and utilities CD* and click **Next**. The driver installs.

3 Click **Finish**, and a second wizard appears.

4 If the CD menu screen appears above the wizard, click **New Hardware Wizard** from the Windows taskbar.

5 Click **Next**. **Automatic search for a better driver for your device (Recommended)** is selected.

6 Click **Next**. The driver installs.

7 Click **Finish**.

If the CD software installation menu does not appear, follow these instructions:

1 Click **Start** → **Run** → **Browse** to D: (where "D" is your CD drive).

2 Select **Setup**, click **Open**, and then click **OK**.

3 Click **Personal Installation**.

4 Click **Typical Installation** or **Custom Installation**. (If you choose Custom Installation, select from the available software options and click **Next**.)

5 After installation, you may click **Print Test Page**.

6 Click **Finish**.

Assigning an IP Address

Before using the printer on the network, you must set an IP address, subnet mask, and gateway for the printer. To automatically set the IP address, a DHCP or BOOTP server must exist on the network.

To configure the IP address manually, you can use the supplied *drivers and utilities CD*. Print the Network Configuration page of the printer to see the current network configuration and MAC address. You will need this information to configure the printer for the network.

1 Make sure that the printer is connected to your network and powered on. Close all unnecessary programs.

2 Insert the *drivers and utilities CD*.

3 If required, press the **Language** button to select a language.

4 Select **SetIP Address Utility**. The list of printers available in the network displays.

5 Select the printer you want to assign an IP to. The printer's default IP address is on the Configuration page.

6 After you assign the IP address for the printer, exit the program.

Installing Dell Software For Network Printing

When you connect your printer to the network, configure the TCP/IP settings for the printer befor you install the Dell software on each network printer.

You can install the Dell software on the network computers locally or remotely.

NOTE: You need administrative access to install printer drivers on the network computers.

1 Make sure that the printer is connected to your network and powered on. Close all unnecessary programs. For details about connecting to the network, see page 26.

2 Insert the *drivers and utilities CD*.

3 If required, press the **Language** button to select a language.

4 Select **Network Installation** and click **Next**.

5 If you want to install the drivers on this computer for network operation, select **Local Installation**, and click **Next**.

If you want to install the Dell software on the remote computers or network servers on the same network, select **Remote Installation**. The domain administrator's ID and password are required. Select the client computer(s) in the same domain on a network and click **Next**.

NOTE: Both server computer and client computer should be one of the following OS: Windows XP, Windows 2000, Windows NT4.0

NOTE: The server computer should be able to resolve the client computer name into an IP address.

6 The list of printers available on the network appears. Select the printer you want to install and click **Next**.

If you do not see your printer in the list, click **Update** to refresh the list or click **Add Printer** to add your printer to the network. To add the printer to the network, enter the port name and an existing IP address for the printer.

If you want to install the printer on a server, select the **I am setting up this printer on a server** check box.

7 A list of the printer drivers and utilities appears. Click and select the required drivers and utilities you will use and click **Next**.

8 The list of printers available on the network appears. Select the printer you want to install and click **Next**.

If you do not see your printer in the list, click **Update** to refresh the list or click **Add Printer** to add your printer to the network. To add the printer to the network, enter the port name and an existing IP address for the printer.

9 The screen displays the printer drivers installed on your computer. You can change the printer name, set this printer as a default to be shared on the network. Click **Next**.

10 When you finish with printer installation, you may print a test page. Click **Finish**.

Uninstalling Software

Remove the printer drivers if you are upgrading the software or if your driver installation fails. You can remove the software using the *drivers and utilities CD* or Windows uninstall.

NOTE: Close all programs before uninstalling software, and restart your computer after completing the uninstall process.

1 From the **Start** menu, select **Programs** → **DELL** → **DELL Printers** → **Dell Laser MFP 1815** → **Dell MFP Software Uninstall**.

2 Select the software you want to remove.

3 When your computer prompts you to confirm your selection, click **Yes**. The selected driver and all its components are removed from your computer.

4 Click **OK**.

5 Restart your computer.

3

Loading Print Media

Print Media Guidelines

The following tables provide information on standard and optional sources, including the print media sizes you can select from the paper size menu and supported weights.

NOTE: *If you use a print media size not listed,* select the next larger size.

Print Media Sizes and Support

Legend Y- indicates Support Print Media Size	Dimensions	Paper Tray (tray 1 and optional tray 2)	Bypass Tray	Duplex Printing
A4	8.27 x 11.7 in. (210 x 297 mm)	Y	Y	Y
A5	5.83 x 8.27 in. (148 x 210 mm)	Y	Y	-
A6	4.13 x 5.85 in. (105 x 148.5 mm)	Y	Y	-
JIS B5	7.17 x 10.1 in. (182 x 257 mm)	Y	Y	-
ISO B5	6.93 x 9.84 in. (176 x 250 mm)	Y	Y	-
Letter	8.5 x 11 in. (215.9 x 279.4 mm)	Y	Y	Y
Legal	8.5 x 14 in. (215.9 x 355.6 mm)	Y	Y	Y
Executive	7.25 x 10.5 in. (184.2 x 266.7 mm)	Y	Y	-
Oficio	8.5 x 13.5 in. (216 x 343 mm)	Y	Y	Y
Folio	8.5 x 13 in. (216 x 330 mm)	Y	Y	Y

Legend Y- indicates Support Print Media Size	Dimensions	Paper Tray (tray 1 and optional tray 2)	Bypass Tray	Duplex Printing
Envelope 7-3/4 (Monarch)	3.875 x 7.5 in. (98.4 x 190.5 mm)	-	Y	-
Envelope COM-10	4.12 x 9.5 in. (105 x 241 mm)	-	Y	-
Envelope DL	4.33 x 8.66 in. (110 x 220 mm)	-	Y	-
Envelope C5	6.38 x 9.01 in. (162 x 229 mm)	-	Y	-
Envelope C6	4.49 x 6.38 in. (114 x 162 mm)	-	Y	-
Custom	3 x 5 in. to 8.5 x 14 in. (76 x 127 mm to 216 x 356 mm)	-	Y	-

Print Media Supported

Print Media	Paper Tray	Bypass Tray	Standard Output Tray
Paper	Y	Y	Y
Card Stock	-	Y	Y
Transparencies	-	Y	-
Labels	-	Y	Y
Dual-web and Integrated Labels	-	Y	Y
Envelopes	-	Y	Y

Print Media Types and Weights

Print Media	Type	Print Media Weight	
		Tray 1 and Optional Tray 2	**Bypass Tray**
Paper	Xerographic or business paper	60-90 g/m^2 grain long (16-24 lb bond)	60-135 g/m^2 grain long (16 to 36 lb bond)
Card stock-maximum (grain long)[a]	Index Bristol	-	120 g/m^2 (31 lb)
	Tag	-	120 g/m^2 (31 lb)
	Cover	-	135 g/m^2 (35 lb)
Card stock-maximum (grain short)[a]	Index Bristol	-	163 g/m^2 (43 lb)
	Tag	-	163 g/m^2 (43 lb)
	Cover	-	163 g/m^2 (43 lb)
Transparencies	Laser printer	-	138-146 g/m^2 (37-39 lb bond)
Labels-maximum	Paper	-	163 g/m^2 (43 lb bond)
	Dual-web paper	-	163 g/m^2 (43 lb bond)
	Polyester	-	163 g/m^2 (43 lb bond)
	Vinyl	-	163 g/m^2 (43 lb liner)
Integrated Forms	Pressure- sensitive area (must enter the printer first)	-	135-140 g/m^2 (36-40 lb bond)
	Paper base (grain long)	-	75-135 g/m^2 (20-36 lb bond)
Envelopes 100% Cotton Content Maximum Weight- 24 lb	Sulfite, wood-free or up to 100% cotton bonds	-	75-90 g/m^2 (20-24 lb)

a. Grain short is preferred for papers over 163 g/m^2.

Loading Paper

Using the Paper Tray

Load up to 250 sheets of plain paper (75 g/m^2, 20 lb) in the paper tray.

NOTE: Set the paper type and size after loading paper into the paper tray. See "Setting the Paper Size and Type" on page 45 for the paper used in copying and faxing, or Paper Tab on the *User's Guide* for PC-printing.

To load paper:

1 Pull open the paper tray and remove it from the printer.

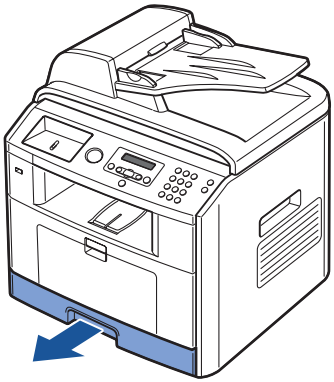

2 If you load paper that is longer than a standard (Letter or A4) size, such as Legal paper, press and unlatch the guide lock, and then slide the paper length guide out completely to extend the paper tray to its full length.

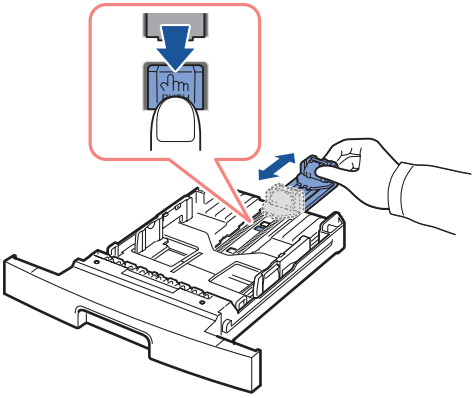

3 Flex the sheets back and forth to loosen them, and then fan them out. Do not fold or crease the print media. Align the edges on a level surface.

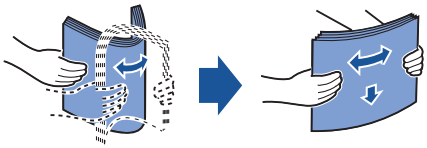

4 Insert the paper stack into the paper tray with the side to be printed on, facing down.

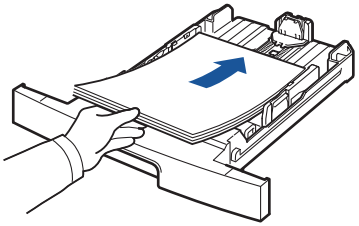

5 Do not exceed the maximum stack height indicated by the paper limit marks on the both inside walls of the tray.

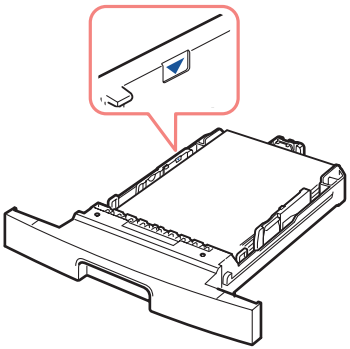

NOTE: Overloading the paper tray may cause paper jams.

6 Slide in the paper length guide until it lightly touches the end of the paper stack.

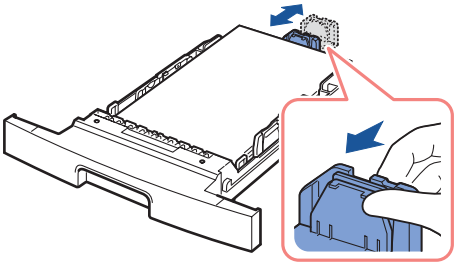

For paper smaller than Letter size, adjust the front paper length guide so that it lightly touches the paper stack.

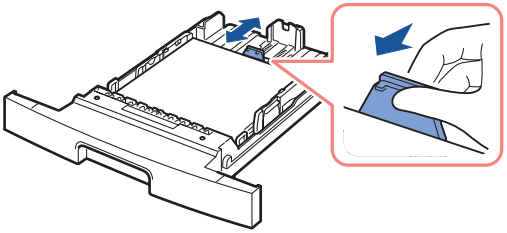

7 Pinch the paper width guide, as shown, and move it towards the stack of paper until it lightly touches the side of the stack.

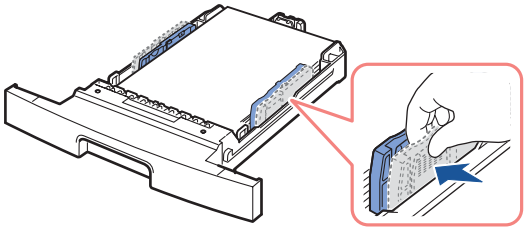

NOTE: Improper adjustment of paper guides can result in paper jams.

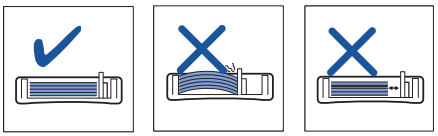

8 Insert and slide the paper tray back into the printer.

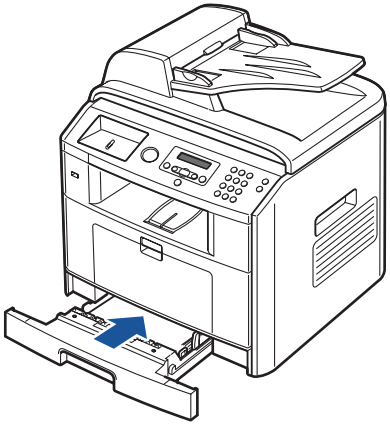

9 Set the paper type and size. See "Setting the Paper Size and Type" on page 45 for copying and faxing or Paper Tab on the *User's Guide* for PC-printing.

Using the Bypass Tray

Use the bypass tray to print manual duplex, transparencies, labels, envelopes or postcards in addition to making quick runs of paper types or sizes that are not currently loaded in the paper tray.

Postcards, 3.5 by 5.83 in. (index) cards and other custom-sized materials can be printed with this printer. The minimum size is 3.0 by 5.0 in. (76 by 127 mm) and the maximum size is 8.5 by 14 in. (216 by 356 mm).

Acceptable print materials are plain paper with sizes ranging from 3.0 by 5.0 in. (76 by 127 mm) to Legal, 8.5 by 14 in. (216 by 356 mm), the largest size acceptable, and weighing between 16 lb (60 g/m^2) and 43 lb (163 g/m^2).

NOTE: Always load only the print materials specified in the Specifications on the *User's Guide* to avoid paper jams and print quality problems.

NOTE: Flatten any curl on postcards, envelopes and labels before loading them into the bypass tray.

To use the bypass tray:

1 Open the bypass tray and unfold the paper support extension, as shown.

2 *If you are using paper,* flex or fan the edge of the paper stack to separate the pages before loading.

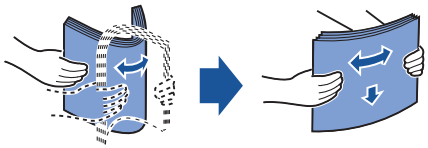

For transparencies, hold them by the edges and avoid touching the print side. Oils from your fingers can cause print quality problems.

3 Load the print material **with the side to be printed on facing up**.

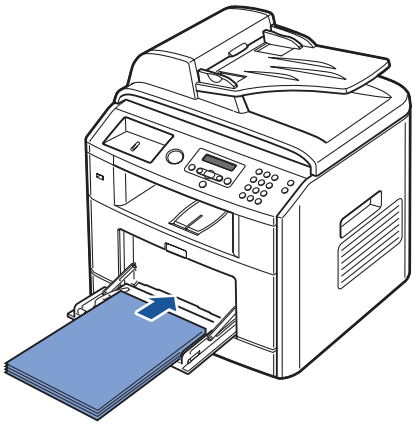

Depending on the paper type you are using, keep the following loading method:

- Envelopes: load them with the flap side down and with the stamp area on the top left side.

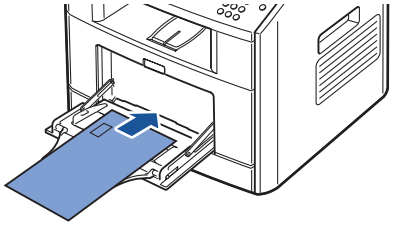

- Transparencies: load them with the print side up and the top with the adhesive strip entering the printer first.
- Labels: load them with the print size up and top short edge entering the printer first.
- Preprinted paper: load with the design face up, top edge toward the printer.
- Card stock: load them with the print side up and the short edge entering the printer first.
- Pre printed paper: the printed side should be facing down with an uncurled edge toward the printer.

4 Squeeze the width guide and adjust it to the width of the print material. Do not force too much, or the paper will be bent, which will result in a paper jam or skew.

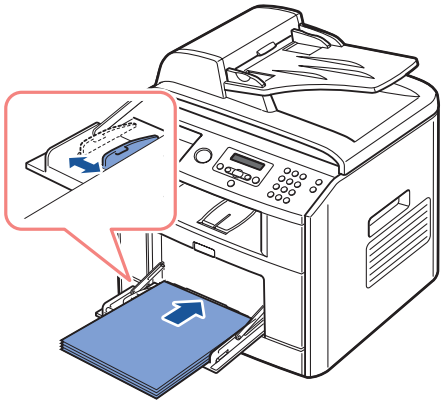

5 After loading paper, set the paper type and size for the bypass tray. See "Setting the Paper Size and Type" on page 45 for copying and faxing or Paper Tab on the *User's Guide* for PC-printing.

NOTE: The settings made from the printer driver override the settings on the operator panel.

CAUTION: Make sure to open the rear cover when you print on transparencies. If not, they may tear while exiting the machine.

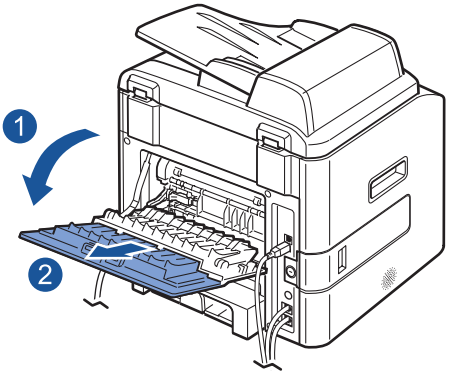

6 After printing, fold away the paper support extension and close the bypass tray.

You can load up to:	Make sure:
250 sheets of plain paper in the paper tray	The paper is designed for use with laser printers.
5 sheets of envelope in the bypass tray	• The stamp location is in the upper left corner. 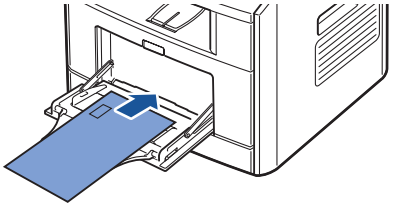 • The envelope is designed for use with laser printers. • Squeeze and slide the paper guide to the width of the envelope. **NOTE:** Do not load envelopes with: • Holes, perforations, cutouts, or deep embossing. • Metal clasps, string ties, or metal folding bars. • Exposed flap adhesive.
5 sheets of labels in the bypass tray	The label is designed for use with laser printers.
5 sheets of card stock in the bypass tray	• The card stock is designed for use with laser printers. • The thickness should not exceed 0.025 inches.
5 sheets of transparency in the bypass tray	• The transparency is designed for use with laser printers. • The rough side faces you.

You can load up to:	Make sure:	
5 sheets of custom sized paper in the bypass tray	Your paper size should fit within these dimensions:	
	Width	Length
	3.0-8.5 in. (76-216 mm)	5.0-14.0 in. (127-356 mm)

Your printer has two output locations; the rear output slot and the front output tray. Before you begin copying, scanning, printing, or sending faxes, refer to the table below about how much paper the printer output trays can hold:

Output Location	Capacity
front output tray (face down)	150 sheets of paper
rear output slot (face up)	1 sheet of paper

Setting the Paper Size and Type

Setting the Paper Size

After loading paper in the paper tray or the bypass tray, you need to set the paper size using the operator panel buttons. This setting will apply to Fax and Copy modes. For PC-printing, you need to select the paper type in the application program you use.

1 Press **Scroll** (◁ or ▷) to highlight **Menu** and press **Select** (✓).
2 Press **Select** (✓) to access **Paper Setting**.
3 Press **Select** (✓) to access **Paper Size**.
4 Press **Scroll** (◁ or ▷) to select the paper tray you want to use and press **Select** (✓).
5 Press **Scroll** (◁ or ▷) to find the paper size you are using and press **Select** (✓).
6 Press **Cancel** (⊗) to return to Standby mode.

Setting the Paper Type

After loading paper in the paper tray or the bypass tray, you need to set the paper type using the operator panel buttons. This setting will apply to Fax and Copy modes. For faxing, you can only set the paper type to the Plain Paper. For PC-printing, you need to select the paper type in the application program you use.

1 Press **Scroll** (◁ or ▷) to highlight **Menu** and press **Select** (✓).
2 Press **Select** (✓) to access **Paper Setting**.
3 Press **Scroll** (◁ or ▷) to highlight **Paper Type** and press **Select** (✓).
4 Press **Scroll** (◁ or ▷) to find the paper type you are using and press **Select** (✓).
5 Press **Cancel** (⊗) to return to Standby mode.

Placing Documents on the Scanner Glass

NOTE: Contaminants on the scanner glass may cause black spots on the printout. For best results, clean the scanner glass before use. See page 77.

NOTE: To get the best scan quality, especially for color or gray scale images, use the scanner glass instead of the ADF.

1 Lift and open the document cover.

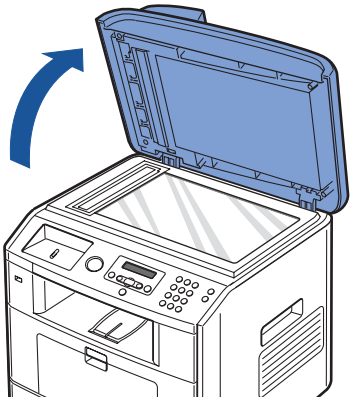

2 Place the document **face down** on the scanner glass and align it with the registration guide on the top left corner of the glass.

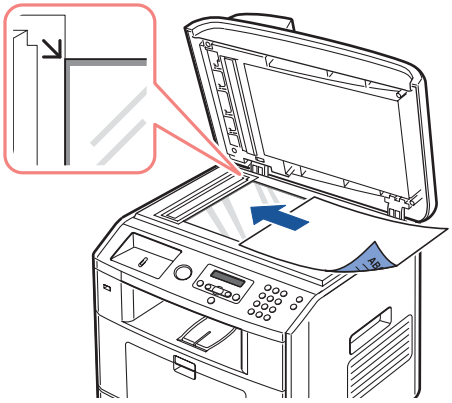

3 Close the document cover.

Loading Documents Into the ADF

NOTICE: Do not load more than 50 sheets into the ADF or allow more than 50 sheets to be fed to the ADF output tray. The ADF output tray should be emptied before it exceeds 50 sheets or your original documents may be damaged.

You can load up to 50 sheets of your original document (text side up with page one on top) into the ADF for scanning, copying, and faxing. The ADF is recommended for loading multiple page documents.

1 Place the document(s) face up on the ADF with the top edge of the documents in first.

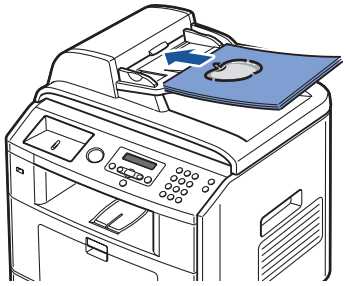

2 Adjust the document guides to the correct document size. Make sure that the bottom of the document stack matches the document size marked on the document tray.

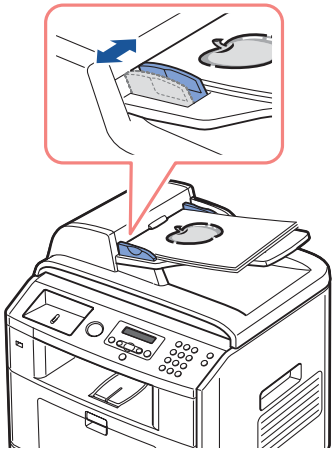

4

Using Your Multi-Function Printer

Printing

Printing in Windows

1 Load paper. See page 38.
2 With your document open, click **File** → **Print**.
3 Select the printer driver you want to use from the Print window.
4 To change the printer settings, click **Properties**, **Preference**, **Options**, or **Setup**, depending on the program or operating system.

   The printer properties dialog box displays.

5 From the five tabs on the top of the printer properties screen, confirm the selections.
6 Click **OK** until the **Print** window appears.
7 Click **OK** or **Print,** depending on the program or operating system, to start printing.

NOTE: Press the **Cancel** (⊗) button on the operator panel to cancel a print job.

Accessing Printer Properties

Change printer settings in the printer properties tabs. The printer properties window differs, depending on your operating system.

1 With your document open, click **File** → **Print**.

   The Print dialog box appears.

2 Select the printer driver you want to use from the Print window.
3 In the Print dialog box, click **Properties**, **Preference**, **Options**, or **Setup**, depending on your program or operating system.
4 For details about the printer properties tabs, please refer to the *User's Guide*.

Printing in Macintosh

Your printer supports Macintosh systems with a built-in USB interface or 10/100 Base-TX network interface card. When you print a file from a Macintosh computer, you can use the PostScript driver by installing the PPD file. Refer to the *User's Guide*.

Printing in Linux

Your printer supports Linux systems with Dell's MFP driver package. Refer to the *User's Guide*.

Copying

NOTE: A computer connection is not required for copying.

Knowing Copy Menu

Copy	
# of Copies	Select Tray
Zoom	Layout
Contrast	Duplex
Quality	Copy Defaults

Refer to the following copy settings.

Setting the Basic Copy Options

The Copy menus on the operator panel let you customize all the basic copy options; number of copies, copy size, contrast and image quality. Set the following options for the current copy job before pressing **Start** (▷) to make copies.

NOTE: *If you press **Cancel** (⊗) while you set the copy options,* all of the options you have set for the current copy job may be canceled and return to their default status. Or, they automatically return to their default status after copying.

Number of Copies

You can select the number of copies from 1 to 199.

1 Press **Scroll** (◁ or ▷) to highlight **Copy** and press **Select** (✓).
2 Press **Select** (✓) to access **# of Copies**.
3 Enter the value you want using the number keypad.

Reduced/Enlarged Copy

You can reduce or enlarge the size of a copied image, from 25 percent to 400 percent when you copy original documents from the document glass or from 25 percent to 100 percent from the ADF. Note that the zoom rate available is different depending on the document loading method.

NOTE: When you make a reduced copy, black lines may appear at the bottom of your copy.

To select from the predefined copy sizes:

1 Press **Scroll** (◁ or ▷) to highlight **Copy** and press **Select** (✓).
2 Press **Scroll** (◁ or ▷) to highlight **Zoom** and press **Select** (✓).
3 Press **Scroll** (◁ or ▷) to find the size setting you want and press **Select** (✓).

To fine-tune the size of copies:

1 Press **Scroll** (◁ or ▷) to highlight **Copy** and press **Select** (✓).
2 Press **Scroll** (◁ or ▷) to highlight **Zoom** and press **Select** (✓).
3 Press **Scroll** (◁ or ▷) to display **Other (25-400%)** (from the document glass) or **Other (25-100%)** (from the ADF) and press **Select** (✓).
4 Enter the value you want using the number keypad and press **Select** (✓).

Contrast

Adjust the contrast to make the copy lighter or darker than the original.

1 Press **Scroll** (◁ or ▷) to highlight **Copy** and press **Select** (✓).
2 Press **Scroll** (◁ or ▷) to highlight **Contrast** and press **Select** (✓).
3 Press **Scroll** (◁ or ▷) to adjust the contrast.

Quality

You can use the Quality settings to improve the image quality by selecting the document type for the current copy job.

1 Press **Scroll** (◁ or ▷) to highlight **Copy** and press **Select** (✓).
2 Press **Scroll** (◁ or ▷) to highlight **Quality** and press **Select** (✓).
3 Press **Scroll** (◁ or ▷) to select the image quality mode and press **Select** (✓).
   - **Text**: Use for documents with fine details, such as fine text.
   - **Text & Photo**: Use for documents with both text and photo/gray tones.
   - **Photo**: Use for documents with photo or gray tones.

Making Copies

NOTE: A computer connection is not required for copying.

NOTE: Contaminates on the ADF glass or the document glass may cause black vertical lines or black spots on the printout. For best results, clean the ADF glass and the document glass before use. See "Cleaning the Scanner" on page 77.

1 Load the document(s) face up with top edge in first into the ADF.

   OR

   Place a single document face down on the document glass.

   For details about loading a document, see "Placing Documents on the Scanner Glass" on page 46 or "Loading Documents Into the ADF" on page 47.

2 Customize the copy settings including the number of copies, copy size, the contrast, and the image quality by selecting the copy menu and using the operator panel buttons.

   To clear the settings, use **Cancel** (⊗) button.

3 *If necessary,* you can use special copy features, such as Auto Fit, Clone, Poster, and ID copying, referring to "Special Copy Features" on page 52.

4 Press **Start** ( ) to begin copying. The display shows the copy processing.

NOTE: You can cancel the copy job at any time. Press **Cancel** ( ) to stop copying.

Special Copy Features

Access the following copy features using **Layout** of copy menu.

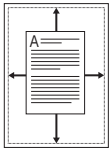

Auto Fit Copying (available via scanner glass only): Automatically reduces or enlarges the original image to fit on the paper loaded in the printer.

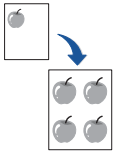

Clone Copying (available via scanner glass only): Prints multiple image copies from the original document on a single page. The number of images is automatically determined by the original image and paper size.

NOTE: You cannot adjust the copy size using the **Zoom** menu.

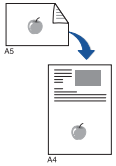

ID Copying (available via scanner glass only): Prints a two-sided original document on one sheet of paper. Use this feature to print one side on the upper half of the paper and the reverse side on the lower half without reducing the original size. This is helpful for copying a small-sized document as some portions may not be printed if the original is larger than the printable area.

NOTE: You cannot adjust the copy size for ID copying.

NOTE: The copy job is cancelled if no buttons are pressed for 30 seconds.

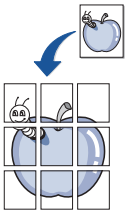

Poster Copying (available via scanner glass only): Prints an image onto nine sheets of paper (3 by 3). You can paste the printed pages together to make one poster-size document. Each portion is scanned and printed one by one.

NOTE: You cannot adjust the copy size for making a poster.

Off: Prints in normal mode.

NOTE: Contaminants on the scanner glass may cause black spots on the printout. For best results, clean the scanner glass before use.

NOTE: Leaving the cover open while copying may affect the copy quality and toner consumption.

Selecting a Paper Tray

After loading the print media for copy output, you have to select the paper tray you will use for the copy job.

1 Press **Scroll** (◁ or ▷) to highlight **Copy** and press **Select** (✓).

2 Press **Scroll** (◁ or ▷) to highlight **Select Tray** and press **Select** (✓).

3 Press **Scroll** (◁ or ▷) to display the paper tray you want.

   You can select from Tray1, Tray2(option) and Bypass. *If you do not install the optional tray 2*, the Tray2(option) menu item will not appear on the display.

4 Press **Select** (✓) to save the selection.

5 Press **Cancel** (⊗) to return to Standby mode.

Printing Copies on Both Sides of Paper

You can set the printer to print copies on both sides of paper. You can print on both sides of paper manually with the Laser MFP 1815n and automatically with the Laser MFP 1815dn.

1 Load the documents to be copied in the ADF.

2 Press **Scroll** (◁ or ▷) to highlight **Copy** and press **Select** (✓).

3 Press **Scroll** (◁ or ▷) to highlight **Duplex** and press **Select** (✓).

4 Press **Scroll** (◁ or ▷) to select the binding option you want and press **Select** (✓).

   - **Off**: Prints in normal mode.
   - **Long Edge**: Prints pages to read like a book.
   - **Short Edge**: Prints pages to read by flipping over like a note pad.

5 *If necessary,* customize the copy settings including the number of copies, copy size, contrast, and image quality by using the Copy menus.

6 Press **Start** (▷) to begin copying.

   If you use the Dell Laser MFP 1815dn printer, it prints on both sides of paper automatically.

   If you use the Dell Laser MFP 1815n printer, it prints the front side of the paper. Follow the on-screen instructions to print the back side of the paper.

Changing the Default Settings

The copy options, including contrast, image quality, copy size, and the number of copies, can be set to the most frequently used modes. When you copy a document, the default settings are used unless changed using Copy menus.

NOTE: While you set copy options, pressing **Cancel** (⊗) cancels the changed settings and returns to the default status.

To create your own default settings:

1 Press **Scroll** (◁ or ▷) to highlight **Copy** and press **Select** (✓).

OR

Press **Scroll** (◁ or ▷) to highlight **Menu** and press **Select** (✓)

2 Press **Scroll** (◁ or ▷) to highlight **Copy Defaults** and press **Select** (✓).

3 Press **Scroll** (◁ or ▷) to scroll through the setup options.

4 Press **Select** (✓) to access the option you want to set.

5 Change the setting using the **Scroll** (◁ or ▷) or enter the value using the number keypad.

6 Press **Select** (✓) to save the selection.

7 Repeat steps 3 through 6, as needed.

8 Press **Cancel** (✕) to return to Standby mode.

Scanning

Use your Dell Laser MFP 1815 to convert pictures and text into editable images on your computer. After you install the software from the *drivers and utilities CD*, you can start scanning images using either the operator panel or applications such as Dell ScanCenter, PaperPort and Adobe PhotoShop on your computer, or through the network using Network Scan, which allows you to scan a document on your printer as a JPEG, TIFF or PDF and save it to a network-connected computer. Or, you can send the scanned image as an e-mail attachment directly from your printer.

NOTE: PaperPort is the scanning program provided with your printer.

The resolution setting to use when you scan an item using PaperPort depends on the item type and how you plan to use the image or document after you scan it in to your computer. For the best results, use these recommended settings.

Item Type	Resolution
Documents	300 dpi black-and-white or 200 dpi grayscale or color
Documents of poor quality or that contain small text	400 dpi black-and-white or 300 dpi grayscale
Photographs and pictures	100-200 dpi color or 200 dpi grayscale
Images for an inkjet printer	150 dpi to 300 dpi
Images for a high-resolution printer	300 dpi to 600 dpi

Scanning above these recommended resolutions may exceed the capabilities of the application. *If you require a resolution above those recommended in the above table,* you should reduce the size of the image by previewing (or pre-scan) and cropping before scanning the image.

NOTE: You can use PaperPort's built-in OCR software to copy text from scanned documents so that you can use and edit the text in any text editing, word processing, or spreadsheet program. The OCR process requires textual images scanned at 150 to 600 dpi and 300 dpi or 600 dpi is recommended for graphics.

NOTE: The first time you use PaperPort you must open PaperPort on your computer before you start scanning in order for the scanned document to be stored in your computer.

If you prefer to use another application, such as Adobe PhotoShop, you must assign the application to the printer by selecting it from the list of available applications. Please refer to "Printer Settings Utility" on the *User's Guide*.

Dell ScanCenter is a PaperPort application that enables you to scan items and send them directly to PaperPort or other programs on your computer without first running PaperPort. Dell ScanCenter runs as a separate application from the Windows Start Menu and displays the Dell ScanCenter bar. For more information about using Dell ScanCenter, refer to PaperPort's Help menu.

Icons on the Dell ScanCenter bar represent the programs that are limited to PaperPort and to Dell ScanCenter. To scan and send an item to a program, click the program icon and then scan the item. Dell ScanCenter automatically starts the selected program when the scan is complete.

Knowing Scan Menu

Scan
USB key
PC
Network

Refer to the following scanning methods.

Scanning to an Application

1 Load the document(s) face up with top edge in first into the ADF.

OR

Place a single document face down on the document glass.

For details about loading a document, see "Placing Documents on the Scanner Glass" on page 46 or "Loading Documents Into the ADF" on page 47.

2 Press **Scroll** (◁ or ▷) to highlight **Scan** and press **Select** (✓).

3 Press **Scroll** (◁ or ▷) to highlight **PC** and press **Select** (✓).

4 Press **Scroll** (◁ or ▷) to select an application to which you want to send the scanned image. The default applications are MS Paint, Email, My Documents, PaperPort, and OCR.

- **MS Paint**: Sends the scanned image to Microsoft Paint.
- **Email**: Sends the scanned image to your default email program on the computer. A new message window opens with the image attached.
- **My Documents**: Saves the scanned image in the My Documents folder on the computer.
- **PaperPort**: Sends the scanned image to PaperPort.
- **OCR**: Sends the scanned image to OCR.

NOTE: The operator panel's application list supports up to 30 applications and is only displayed in English.

NOTE: You can add more TWAIN-compliant software for scanning, such as Adobe Photoshop Deluxe, or Adobe Photoshop, from the Printer Settings Utility.

5 Press **Start** (▷). The selected application window opens. Adjust the scan settings and start scan. For details, refer to the *User's Guide* of the application.

Scanning Using Network Scan

Network Scan allows you to scan a document on your printer as a JPEG, TIFF or PDF and save it to a network-connected computer. To use this feature, you must install Network Scan on your computer.

Scanning Using Network Scan

Using Network Scan you can scan a document from your printer to your computer through the network.

1 Load the document(s) face up with top edge in first into the ADF.

OR

Place a single document face down on the document glass.

For details about loading a document, see "Placing Documents on the Scanner Glass" on page 46 or "Loading Documents Into the ADF" on page 47.

2 Press **Scroll** (◁ or ▷) to highlight **Scan** and press **Select** (✓).

3 Press **Scroll** (◁ or ▷) to highlight **Network** and press **Select** (✓).

4 Press **Scroll** (◁ or ▷) to highlight **PC** and press **Select** (✓).

5 Press **Scroll** (◁ or ▷) to select the registered name you want and press **Select** (✓).

6 Enter the PIN you have registered and press **Select** (✓).

7 Press **Scroll** (◁ or ▷) to highlight **Scan Preference** and press **Select** (✓).

8 Choose the file type and resolution and then press **Select** (✓).

- **Black & White**: *If you select this option,* select file type **PDF** or **TIFF**.
- **Color JPEG-200**: *If you select this option,* **200 dpi** resolution and **JPEG** file type will be automatically selected.
- **Resolution**: Select resolution 100 dpi, 200 dpi or 300 dpi.

9 Press **Scroll** (◁ or ▷) to display **Start Scanning** and press **Select** (✓).

If you press **Select** *(✓) when the display shows* ***Logout,*** your printer returns to the Standby mode.

10 Press **Scroll** (◁ or ▷) to display the program you will use and press **Select** (✓).

11 The document will be scanned to computer when Network Scan is running. *If your file type is* ***TIFF*** *or* ***PDF,*** the display asks if you want to scan another page. Select **Yes** using **Scroll** (◁ or ▷) and press **Select** (✓). The next page is scanned and stored as the second page of the document. Repeat this until all pages are scanned, then select **No**.

Adding a Scanner

To register your scanner as an authorized network scanner, use the Dell Network Scan Manager window.

1 In the Dell Network Scan Manager window, click the **Add Device** button, or double-click the **Add Device** icon.

2 Click **Next**.

3 Select **Browse for a scanner. (Recommended)**, or **Connect to this scanner**. If you select **Connect to this scanner**, enter an IP address and then click **Next**.

4 A list of scanners on your network appears. Select your printer from the list and enter your printer name, the ID and Personal Identification Number (PIN). Click **Next**.

- You can enter an ID of up to 8 characters. The first character must be a letter.
- The PIN must be 4 digits. This is optional. You can select the default password option.

5 When you have added your printer to the network, Click **Finish**. Your printer appears on the Dell Network Scan Manager window and you can now scan through the network.

Scanning to the USB Memory Key

You can scan a document and save the scanned image on a USB memory key. There are two ways of doing this: you can scan to the USB memory key using the default settings, or you can manually select your own settings.

You can also format the USB memory key or check the available memory space. See the *User's Guide*.

Plugging in a USB Memory Key

The USB memory port on the front of your printer is designed for USB V1.1 and USB V2.0 memory. You must use only an authorized USB memory key whose connector style is A Plug Type.

Insert a USB memory key into the USB memory port on the front of your printer.

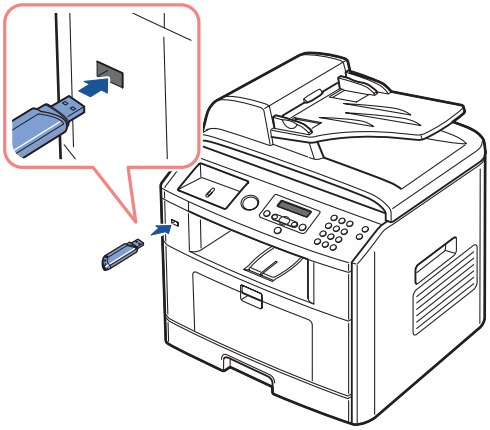

CAUTION: Do not remove the USB memory key while the printer is in operation. This may damage your printer.

CAUTION: *If your USB memory key has certain features, such as security settings and password settings,* your printer may not automatically detect it. For details about these features, see the *User's Guide* which came with your USB memory key.

Scanning Using the Default Settings

The following table shows the default settings.

Image Size	File Format	Resolution
Letter (USA), A4 (UK)	JPEG	200 dpi

1 Insert the USB memory key into the USB memory port on your printer.

2 Load the document(s) face up with top edge in first into the ADF.

OR

Place a single document face down on the document glass.

For details about loading a document, see "Placing Documents on the Scanner Glass" on page 46 or "Loading Documents Into the ADF" on page 47.

3 Press **Scroll** (◁ or ▷) to highlight **Scan** and press **Select** (✓).

4 Press **Select** (✓) to access **USB key**.

5 Press **Select** (✓) to access **Quick Scan**.

Your printer begins scanning the document and save it to your USB memory key.

For the document loaded on the document glass, the display asks if you want to load another page. Select **Yes** to add. Otherwise, select **No**.

Scanning Using My Settings

The following table shows the options you can select.

Image Size	File Format	Color	Resolution
Letter, A4, Legal, Folio, Executive, A5, A6, B5	JPEG, BMP, TIFF, PDF	Color, Gray, Mono	100, 200, 300 dpi

1 Insert the USB memory key into the USB memory port on your printer.

2 Load the document(s) face up with top edge in first into the ADF.

OR

Place a single document face down on the document glass.

For details about loading a document, see "Placing Documents on the Scanner Glass" on page 46 or "Loading Documents Into the ADF" on page 47.

3 Press **Scroll** (◁ or ▷) to highlight **Scan** and press **Select** (✓).

4 Press **Select** (✓) to access **USB key**.

5 Press **Scroll** (◁ or ▷) to highlight **Custom Scan** and press **Select** (✓).

6 Press **Scroll** (◁ or ▷) to select the image size you want and press **Select** (✓).

7 Press **Scroll** (◁ or ▷) to select the file type you want and press **Select** (✓).

*If you select **BMP**,* select scan color and resolution.

*If you select **TIFF**,* select resolution and multi page option.

8 Scanning is started.

For the document loaded on the document glass, the display asks if you want to load another page. Select **Yes** to add. Otherwise, select **No**.

Changing the Default Settings

To change the defaults in the quick scan, follow the steps below.

1 Press **Scroll** (◁ or ▷) to highlight **Scan** and press **Select** (✓).

2 Press **Select** (✓) to access **USB key**.

3 Press **Scroll** (◁ or ▷) to highlight **Default Change** and press **Select** (✓).

4 Press **Select** (✓) to access **Image Size**.

5 Press **Scroll** (◁ or ▷) to highlight the image size, Letter, A4, Legal, Folio, Executive, A5, B5, or A6 and press **Select** (✓).

6 Press **Scroll** (◁ or ▷) to highlight **Version** and press **Select** (✓).

7 Press **Scroll** (◁ or ▷) to highlight the file format, **BMP**, **TIFF**, **PDF**, or **JPEG** and press **Select** (✓).

8 *If you select **PDF, JPEG, or TIFF,*** skip to 9.

*If you select **BMP,*** press **Scroll** (◁ or ▷) to select the color mode, Color, Gray, or Mono, and press **Select** (✓). Press **Scroll** (◁ or ▷) to select multi page option and press **Select** (✓).

9 Press **Scroll** (◁ or ▷) to highlight **Resolution** and press **Select** (✓).

10 Press **Scroll** (◁ or ▷) to highlight the resolution, 100 dpi, 200 dpi, or 300 dpi and press **Select** (✓).

11 Press **Cancel** (⊗) to return to Standby mode.

Scanning Using the Windows Image Acquisition (WIA) Driver

Your printer also supports the WIA driver for scanning images. WIA is one of the standard components provided by Microsoft Windows XP and works with digital cameras and scanners. Unlike the TWAIN driver, the WIA driver allows you to scan an image and easily manipulate those images without using additional software.

NOTE: The WIA driver works only on Windows XP.

1 Load the document(s) face up with top edge in first into the ADF.

OR

Place a single document face down on the document glass.

For details about loading a document, see "Placing Documents on the Scanner Glass" on page 46 or "Loading Documents Into the ADF" on page 47.

2 Click **Start** → **Control Panel** → **Printers and Other Hardware** → **Scanners and Cameras**.

3 Double-click the printer icon. The Scanners and Camera Wizard launches.

4 Choose your scanning preferences and click Preview to see how your preferences affect the picture.

5 Enter a picture name, and select a file format and destination to save the picture.

6 Follow the on-screen instructions to edit the picture after it is copied to your computer.

Scanning and Sending an Email

To use e-mail features such as Scanning to E-mail and Fax Forward to E-mail addresses, you first need to configure the network settings and set up your e-mail account. See the *User's Guide*.

1 Make sure that your printer is connected to a network.

2 Load the document(s) face up with top edge in first into the ADF.

OR

Place a single document face down on the document glass.

For details about loading a document, see "Placing Documents on the Scanner Glass" on page 46 or "Loading Documents Into the ADF" on page 47.

3 Press **Scroll** (◁ or ▷) to highlight **Scan** and press **Select** (✓).

4 Press **Scroll** (◁ or ▷) to highlight **Network** and press **Select** (✓).

5 Press **Select** (✓) to access **Email**.

6 Enter your login ID and press **Select** (✓).

7 Enter your login password and press **Select** (✓).

8 Enter the recipient's email address and press **Select** (✓).

NOTE: You can enter a name you have stored in the Address Book.

The display asks if you want to enter another address.

9 To enter additional address, press **Scroll** (◁ or ▷) to select **Add** and repeat step 8.

To continue to the next step, press **Select** (✓) when **Done** appears.

10 The display asks if you want to review addresses.

To review addresses, press **Select** (✓) to select **Yes**.

To continue to the next setup, press **Scroll** (◁ or ▷) to select **No** and press **Select** (✓).

11 The display asks if you want to send the e-mail to yourself.

To send to your e-mail address, press **Select** (✓) to select **Yes**.

Or, press **Scroll** (◁ or ▷) to select **No** and press **Select** (✓).

12 Enter the email subject and press **Select** (✓).

13 Press **Scroll** (◁ or ▷) to select the file type to which the scanned image will be converted and press **Select** (✓).

14 Press **Scroll** (◁ or ▷) to select the resolution you want and press **Select** (✓).

15 Press **Start** (▷) or **Select** (✓). The printer begins scanning and then sends the email.

16 *If the display asks if you want to log off your account,* press **Scroll** (◁ or ▷) to select **Yes** or **No** and press **Select** (✓).

17 Press **Cancel** (✕) to return to Standby mode.

Faxing

NOTE: A computer connection is not required for faxing.

It is possible to begin typing the number on the number pad without first selecting fax mode. The printer will automatically switch to fax mode when the fourth digit is entered on the number pad.

Knowing Fax Menu

Fax	
Fax to:	Redials
Phone Book	On Hook Dial
Resolution	Broadcast Fax
Contrast	Fax Features

Refer to the following fax settings.

Setting the Basic Fax Options

Adjusting the Document Contrast

Use the Contrast setting to fax your documents lighter or darker.

1 Press **Scroll** (◁ or ▷) to highlight **Fax** and press **Select** (✓).

2 Press **Scroll** (◁ or ▷) to highlight **Contrast** and press **Select** (✓).

3 Press **Scroll** (◁ or ▷) to select the Contrast mode you want and press **Select** (✓).

- **Lighter** works well with dark print.
- **Normal** works well with standard typed or printed documents.
- **Darker** works well with light print or faint pencil markings.

Adjusting the Document Resolution

Use the Resolution setting to improve the output quality of the original or to scan photographs.

1 Press **Scroll** (◁ or ▷) to highlight **Fax** and press **Select** (✓).

2 Press **Scroll** (◁ or ▷) to highlight **Resolution** and press **Select** (✓).

3 Press **Scroll** (◁ or ▷) to display the mode you want and press **Select** (✓).

The document types recommended for the resolution settings are described in the table below.

Mode	Recommended for:
Standard	Documents with normal sized characters.
Fine	Documents containing small characters or thin lines or documents printed using a dot-matrix printer.
Super Fine	Documents containing extremely fine detail. The super fine mode is enabled only if the remote printer also supports the Super Fine resolution. See the notes below.
Photo	Documents containing shades of gray or photographs.
Color	Documents with colors. Sending a color fax is enabled only if the remote printer supports color fax reception and you send the fax manually. In this mode, the memory transmission is not available.

NOTE: Faxes scanned in Super Fine resolution will transmit at the highest resolution supported by the receiving device.

Sending a Fax Automatically

1 Load the document(s) face up with top edge in first into the ADF.

OR

Place a single document face down on the document glass.

For details about loading a document, see "Placing Documents on the Scanner Glass" on page 46 or "Loading Documents Into the ADF" on page 47.

2 Press **Scroll** (◁ or ▷) to highlight **Fax** and press **Select** (✓).

3 Adjust the document contrast and resolution to suit your fax needs.

For details, see "Adjusting the Document Contrast" on page 62 and "Adjusting the Document Resolution" on page 62.

4 Enter the remote fax phone number using the number keypad.

You can also use, one, two or three-digit speed or group dial numbers.

5 Press **Start** (▷).

6 When the document is loaded from the document glass, the display shows **Another Page?** on the top line of the display after the document is scanned into the memory. *If you have additional pages,* remove the scanned page and load the next page from the glass and select **Yes**. Repeat as necessary.

After all of the pages are scanned, select **No** when the display shows **Another Page?**.

7 When the printer establishes contact with the receiving machine, it dials the number and sends the fax.

NOTE: Press **Cancel** (⊗) to cancel the fax job at any time while sending the fax.

Sending a Fax Manually

1 Load the document(s) face up with top edge in first into the ADF.

OR

Place a single document face down on the document glass.

For details about loading a document, see "Placing Documents on the Scanner Glass" on page 46 or "Loading Documents Into the ADF" on page 47.

2 Press **Scroll** (◁ or ▷) to highlight **Fax** and press **Select** (✓).

3 Adjust the document contrast and resolution to suit your fax needs.

For details, see "Adjusting the Document Contrast" on page 62 and "Adjusting the Document Resolution" on page 62.

4 Press **Scroll** (◁ or ▷) to highlight **On Hook Dial** and press **Select** (✓).

5 Press **Select** (✓) to select **Yes**.

6 Enter the number of the remote fax machine using the keypad.

7 When you hear a high-pitched fax tone from the remote fax machine, press **Start** (▷).

NOTE: Press **Cancel** (⊗) to cancel the fax job at any time while sending the fax.

Receiving a Fax

NOTE: The **Dell Laser MFP 1815** cannot receive color faxes.

1 Press **Scroll** (◁ or ▷) to highlight **Fax** and press **Select** (✓).

OR

Press **Scroll** (◁ or ▷) to highlight **Menu** and press **Select** (✓).

2 Press **Scroll** (◁ or ▷) to highlight **Fax Defaults** and press **Select** (✓).

3 Press **Scroll** (◁ or ▷) to display **Receive Mode** and press **Select** (✓).

4 Press **Scroll** (◁ or ▷) to select the default receiving mode you want to use.

For details about the receiving mode, refer to “Receive Mode” on page 66.

5 Press **Select** (✓) to save the selection.

6 Press **Cancel** (⊗) to return to Standby mode.

Your printer provides an additional option, Secure Receive, to receive and print received faxes. Refer to “Advanced Fax” in the fax menu options, see page 68.

Forwarding Faxes to E-mail Addresses

You can set the printer to forward all outgoing or incoming faxes to specified email addresses.

1 Press **Scroll** (◁ or ▷) to highlight **Menu** and press **Select** (✓).
2 Press **Scroll** (◁ or ▷) to highlight **Email setup** and press **Select** (✓).
3 Press **Scroll** (◁ or ▷) to highlight **Email Forward** and press **Select** (✓).
4 Select the desired status by pressing **Scroll** (◁ or ▷) and press **Select** (✓).
   - **Off**: Allows you to turn this feature off.
   - **Tx Only**: Allows you to forward only outgoing faxes to a specified e-mail address.
   - **Rx Only**: Allows you to forward only incoming faxes to a specified e-mail address. When you select this option, you should choose whether the printer prints out the incoming faxes.
   - **All**: Allows you to forward both incoming and outgoing faxes to a specified e-mail address.
5 Press **Scroll** (◁ or ▷) to select **Keep** or **Replace** and press **Select** (✓).
   - **Keep**: The saved addresses are not deleted.
   - **Replace**: The saved addresses are deleted.
6 Enter the email address faxes will be forwarded and press **Select** (✓).
7 To enter another address, select **Yes**. Or, **No** select and press **Select** (✓).
8 Press **Cancel** (⊗) to return to Standby mode.

Setting up the Fax System

Changing the Fax Setup Options

1 Press **Scroll** (◁ or ▷) to highlight **Fax** and press **Select** (✓).

   OR

   Press **Scroll** (◁ or ▷) to highlight **Menu** and press **Select** (✓).
2 Press **Scroll** (◁ or ▷) to highlight **Fax Defaults** and press **Select** (✓).
3 Press **Scroll** (◁ or ▷) to display the desired menu item and press **Select** (✓).
4 Use **Scroll** (◁ or ▷) to find the status or use the number keypad to enter the value for the option you have selected.
5 Press **Select** (✓) to save the selection.

   If necessary, repeat steps 3 through 5.
6 Press **Cancel** (⊗) to return to the Standby mode.

Fax options

- **Contrast**: You can select the default contrast value to fax your documents lighter or darker.
- **Resolution**: You can select the default resolution setting to **Standard**, **fine**, or **Super fine**.
- **Ring to Answer**: You can specify the number of times the printer rings, 1-7, before answering an incoming call.
- **Receive Mode**: You can select the default fax receiving mode.
  - **Fax mode (automatic receive mode)**: The printer answers an incoming call and automatically goes into receive mode. The number of rings before the printer answers can be set in the Ring to Answer option. *If the user memory is full,* the printer is changed to Tel mode.
  - **Tel mode (manual receive mode)**: Manual receive mode is enabled when automatic fax reception is turned off.

    You can receive a fax by:

  – picking up the handset of the extension phone not directly connected to the back of the printer and then pressing the remote receive code, or

  – picking up the handset of the extension phone directly connected to the back of the printer and pressing **Start** (▷), or

  – accessing **Fax** → **On Hook Dial** → **Yes** when the bell is ringing (you can hear voice or fax tones from the remote mahine) and then pressing **Start** (▷) on the operator panel.

  - **Ans/Fax mode**: The printer can share one telephone line with an answering machine. In this mode, the printer will monitor the fax signal and pick up the line *if there are fax tones. If the phone communication in your country is serial,* this mode is not available.
  - **DRPD Mode**: Before using the Distinctive Ring Pattern Detection (DRPD) option, distinctive ring service must be installed on your telephone line by the telephone company. After the telephone company has provided a separate number for faxing with a distinctive ring pattern, configure the fax setup to monitor for that specific ring pattern.
- **Redial Delay**: Your printer can automatically redial a remote fax machine *if it was busy.* Intervals from 1-15 minutes can be entered.
- **Redial Attmpts**: You can specify the number of redial attempts, 1-13.
- **MSG Confirm**: You can set your printer to print a report showing whether the transmission was successful, how many pages were sent, and more. The available options are **On**, **Off** and **On-Error**, which prints only when a transmission is not successful.
- **Auto Report**: A report with detailed information about the previous 50 communications operations, including time and dates. The available options are **On** or **Off**.

- **Auto Reduction**: When receiving a document as long as or longer than the paper loaded in the paper tray, the printer can reduce the size of the document to fit the size of paper loaded in the printer. Select **On** *if you want to automatically reduce the incoming document*.

  With this feature set to **Off**, the printer cannot reduce the document to fit onto one page. The document is divided and printed in actual size on two or more pages.

- **Discard Size**: When receiving a document as long as or longer than the paper installed in your printer, you can set the printer to discard any excess at the bottom of the page. *If the received page is outside the margin you set,* it will print on two sheets of paper at the actual size.

  When the document is within the margin and the Auto Reduction feature is turned on, the printer reduces the document to fit it onto the appropriate sized paper and discard does not occur. *If the Auto Reduction feature is turned off or fails,* the data within the margin will be discarded. Settings range from 0-30 mm.

- **Receive Code**: The Receive Code allows you to initiate fax reception from an extension phone plugged into the extension telephone socket(☏) on the back of the printer. *If you pick up the extension phone and hear a fax tone,* enter the Receive Code. The Receive Code is preset to *9* at the factory. Settings range from 0-9.
- **DRPD Mode**: You can receive a call using the Distinctive Ring Pattern Detection (DRPD) feature which enables you to use a single telephone line to answer several different telephone numbers. In this menu, you can set the printer to recognize the ring patterns to answer.
- **Duplex**: This feature is only for the MFP 1815dn. You can set the machine to print received faxes on both sides of paper. The available options are **Off**, **Long Edge**, and **Short Edge**.

Using Fax Features

The following fax features are available. See the *User's Guide* to use fax features.

- **Broadcasting**: Send a document to multiple locations. A second broadcast operation is not permitted until the first one is completed.
- **Add Page**: Add documents to the previously reserved delayed transmission in the fax machine's memory.
- **Delay Fax**: Set the fax machine to send a fax at a later pre-defined time. The display reminds you that you are in Standby mode and that a delayed fax is set.
- **Priority Fax**: Send a high priority document ahead of reserved operations.
- **Cancel Job**: Delete/cancel a scheduled fax job.
- **Ignore Toner**: Set to print the incomming fax stored in memory when toner cartridge is nearly empty.

Printing Reports

1 Press **Scroll** (◁ or ▷) to highlight **Menu** and press **Select** (✓).

2 Press **Scroll** (◁ or ▷) to highlight **Reports** press **Select** (✓).

3 Press **Scroll** (◁ or ▷) to display the report or list you want to print on the bottom line.

- **PhoneBook**: Phonebook list
- **Sent Report**: Sent fax report
- **RCV Report**: Received fax report
- **System Data**: System data list
- **Scheduled Jobs**: Scheduled job information
- **MSG Confirm**: Message confirmation
- **Junk Fax List**: Junk fax number list
- **Scan Journal**: Network Scan sessions list
- **Email Report**: Sent email list

4 Press **Select** (✓).

The selected information prints out.

Using Advanced Fax Features

The following options are available. See the *User's Guide* to use advanced fax features.

- **Send Forward**: Set to always forward all outgoing faxes to the specified destination.
- **Rcv Forward**: Set to forward incoming faxes to another fax number.
- **Toll Save**: Set to store ALL scanned faxes in memory and send at the pre-set time.
- **Junk Fax Setup**: Set junk fax numbers for blocking any unwanted faxes.
- **Secure Receive**: Set **Secure Receive** option with or without setting a passcode to restrict a printout of received faxes. When a fax is received in this mode, the machine stores it into memory and displays **Secure Receive**. To print received documents, access Secure Receive and select "Print" with the four-digit passcode.

  NOTE: When the mode is turned off, any stored faxes are printed.
- **Prefix Dial**: Set a prefix dial number, up to five digits, to dial before any auto dial number.
- **Stamp RCV Name**: Set to print the page number and the date/time on a received page.
- **ECM Mode**: Ensure that faxes are sent error free even in poor phone line conditions.
- **Cover Page**: Set to attach the cover page with your fax. Create a cover page using the Printer Settings Utility.
- **Modem Speed**: Set the maximum modem speed you want.
- **Receive Disable**: Set your printer not to receive incoming faxes.

NOTICE: For memory transmission, the Super Fine resolution is unavailable. The resolution setting is automatically changed to Fine.

NOTICE: Sending a color fax is enabled only if the fax is sent manually and if the remote machine supports color fax reception.

NOTICE: The fax machine automatically stores faxes in the memory if faxes are received while copying, printing, or running out of consumables (paper and toner). Faxes are printed once the machine is available.

Using an Answering Machine

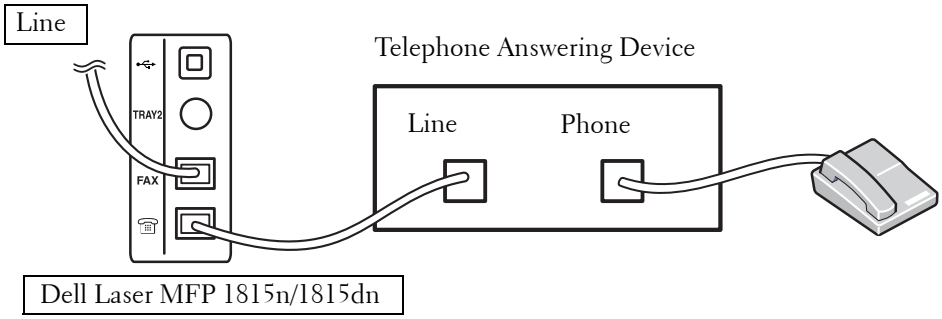

Figure 1

You can connect a telephone answering device (TAD) directly to the back of your printer as shown in Figure 1.

Set your printer to Ans/Fax mode and set the Ring to Answer to a digit greater than the Rings to Answer setting for the TAD.

- When the TAD picks up the call, the printer monitors and takes the line if a fax tone is received and starts receiving the fax.
- If the answering device is off, the printer automatically goes into Fax mode after a predefined number of rings.
- If you answer the call and hear fax tones, the printer will answer the fax call if you
  - access **Fax** → **On Hook Dial** → **Yes** and press **Start** (⊙) and then hang up the receiver,

  or

  - press the remote receive code ***9*** and hang up the receiver.

Using a Computer Modem

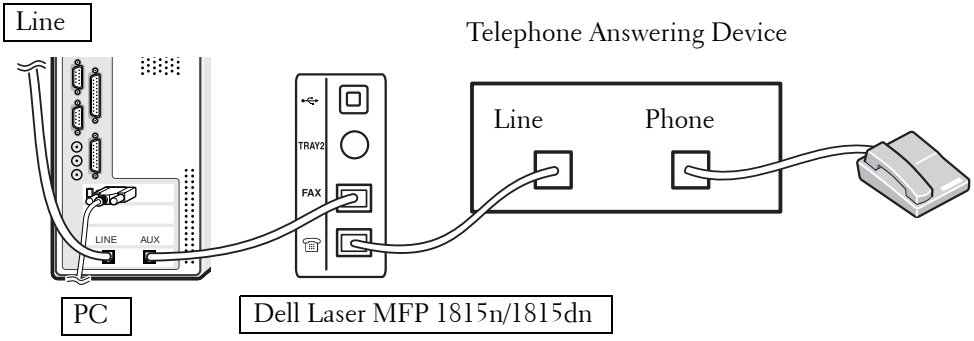

Figure 2

If you want to use your computer modem for faxing or for a dial-up internet connection, connect the computer modem directly to the back of your printer with the TAD as shown here in Figure 2.

- Set your printer to Ans/Fax mode and set the Ring to Answer to a digit greater than the Rings to Answer setting for the TAD.
- Turn off the computer modem's fax-receive feature.
- Do not use the computer modem if your printer is sending or receiving a fax.
- To fax via the computer modem, follow the instructions provided with your computer modem and fax application.
- Refer to the DELL Laser MFP 1518n/1815dn *User's Guide* if you want to capture images using your printer and Dell ScanDirect™ and send images using your fax application with the computer modem.

5

Maintenance

Replacement Parts

From time to time, you need to replace the rollers and fuser unit to maintain top performance and to avoid print quality problems and paper feed problems resulting from worn parts.

The following items should be replaced after you have printed the specified number of pages.

Item	Yield (Average)
ADF rubber pad	Approx. 20,000 pages
Transfer roller	Approx. 70,000 pages
Fuser unit	Approx. 80,000 pages
Tray rubber pad	Approx. 250,000 pages
Pickup roller	Approx. 150,000 pages

To purchase replacement parts, contact your Dell dealer or the retailer where you bought your printer. We strongly recommend that these items be installed by a trained service professional.

Replacing the ADF Rubber Pad

You can purchase an ADF rubber pad from your Dell dealer or the retailer where you bought your printer.

1 Open the ADF cover.

2 Rotate the bushing on the right end of the ADF roller toward the ADF and remove the roller from the slot.

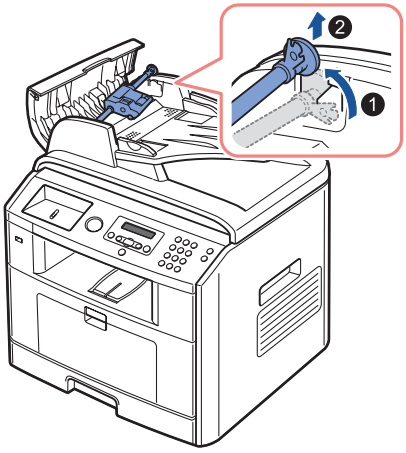

3 Remove the ADF rubber pad from the ADF, as shown.

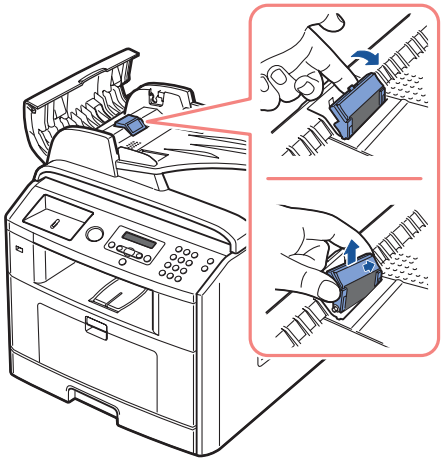

4 Insert a new ADF rubber pad into place.

5 Align the left end of the ADF roller with the slot and push the right end of the ADF roller into the right slot. Rotate the bushing on the right end of the roller toward the ADF.

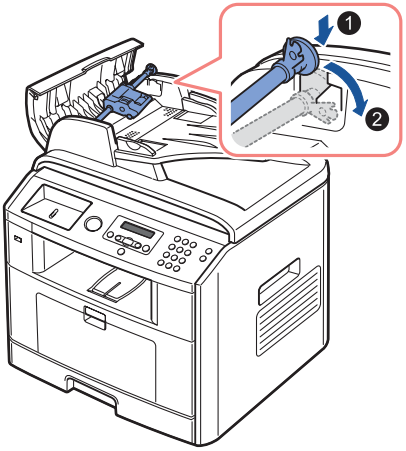

6 Close the ADF cover.

Ordering Supplies

You can order supplies using the Dell™ Toner Management System or the Dell Printer Configuration Web Tool.

If your printer is connected to a network, type your printer's IP address in your Web browser or open the Network Status Monitor Center to launch the Dell Printer Configuration Web Tool and click the toner supplies link.

1 Double-click the Dell Toner Reorder Program icon on your desktop.

OR

2 From the **Start** menu, click **Programs** → **DELL** → **DELL Printers** → **DELL Laser MFP 1815** → **Dell Toner Reorder Program**.

The Order Toner Cartridges window appears.

Go to **www.dell.com/supplies** or **premier.dell.com** to order supplies online.

NOTE: premier.dell.com is Dell's secure, customizable, procurement and support site for its larger relationship customers.

OR

3 *If your printer is connected to a network,* type the printer's IP address in your Web browser to launch the Dell Printer Configuration Web Tool, and click the supplies link.

NOTE: Refer to the following table to order toner cartridges.

Toner cartridge	Part number
Dell Standard Capacity Toner Cartridge[a]	NF485
Dell High Capacity Toner Cartridge	RF223

a. Dell Standard Capacity Toner Cartridge life is 3,000 pages and Dell High Capacity Toner Cartridge life is 5,000 pages. Toner yield based on printing page with 5 % page coverage, in accordance with ISO/IEC 19752 testing methodology. Yields vary with usage and environmental conditions.

Replacing the Toner Cartridge

CAUTION: Before performing any of the procedures listed in this section, read and follow the safety information on page 17.

CAUTION: Do not touch the green underside of the toner cartridge. Use the handle on the cartridge to avoid touching this area.

When the toner cartridge is near the end of its life, the LCD displays the warning message **Toner Low**. Additional pages may be printed, but white streaks or light print will occur. Thoroughly shake the toner cartridge from side-to-side to distribute the toner evenly inside the cartridge and temporarily improve print quality. When the toner eventually runs out, only black pages print when a print job or copy job are sent. In that case, the incoming faxes are only saved in the memory and not printed. At this stage, the toner cartridge needs to be replaced.

To order more toner, go to **www.dell.com/supplies** or **premier.dell.com**.

CAUTION: For best results, use Dell toner cartridges. Print quality and printer reliability are not guaranteed if you do not use Dell supplies.

To replace the toner cartridge:

1 Open the front cover.

2 Pull the toner cartridge out.

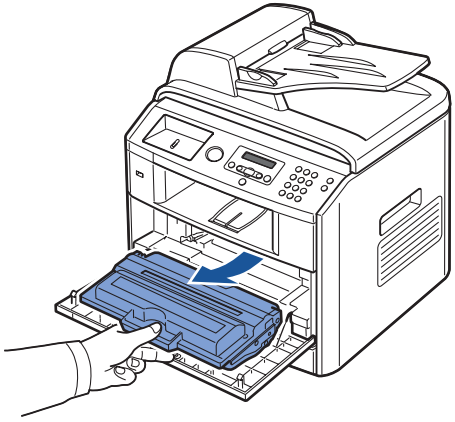

3 Remove the new toner cartridge from its bag.

4 Remove the packing tape and thoroughly shake the cartridge from side-to-side to distribute the toner.

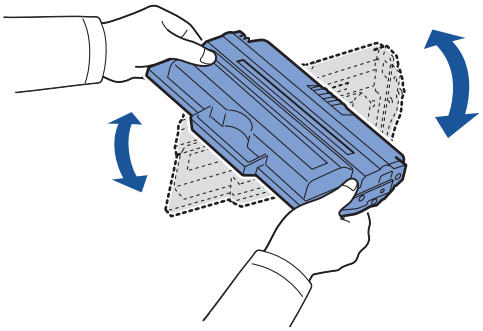

Save the box and the cover for shipping.

NOTE: *If toner comes into contact with your clothing,* wipe the toner off with a dry cloth and wash your clothing in cold water. Hot water sets toner into fabric.

CAUTION: Do not touch the green underside of the toner cartridge. Use the handle on the cartridge to avoid touching this area.

5 Holding the toner cartridge by the handle and slowly insert the cartridge into the opening in the printer.

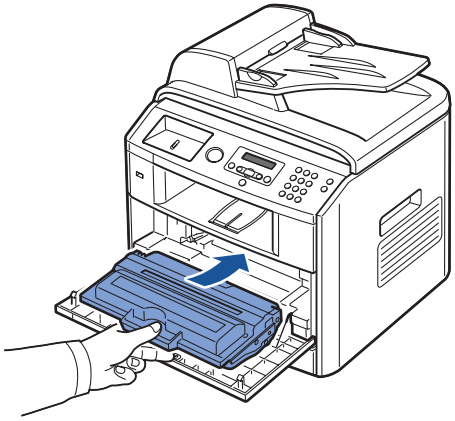

6 Tabs on the sides of the cartridge and corresponding grooves within the printer will guide the cartridge into the correct position until it locks into place completely.

7 Close the front cover. Make sure that the cover is surely closed.

Cleaning Your Multi-Function Printer

To maintain the print quality, follow the cleaning procedures below, each time the toner cartridge is replaced or if print quality problems occur.

NOTE: Do not touch the transfer roller located under the toner cartridge when cleaning inside the printer. Oil from your fingers may cause print quality problems.

CAUTION: Cleaning solvents that contain alcohol or other strong substances may discolor or crack the printer cabinet.

Cleaning the Exterior

Clean the printer cabinet with a soft, damp, lint-free cloth. Do not let water drip onto the printer or inside the printer.

Cleaning the Interior

Paper, toner, and dust particles can accumulate inside the printer and cause print quality problems, such as smearing or toner specks. Clean inside the printer to prevent these problems.

1 Power the printer off and unplug the power cord. Specify the length of time it takes for the printer to cool down.

2 Open the front cover and lightly pull the toner cartridge straight out. Set it on a clean flat surface.

CAUTION: Do not touch the green underside of the toner cartridge. Use the handle on the cartridge to avoid touching this area.

CAUTION: To prevent damage, do not expose the toner cartridge to light for more than a few minutes.

3 With a dry and lint-free cloth, wipe away any dust and spilled toner from the toner cartridge area and the toner cartridge cavity.

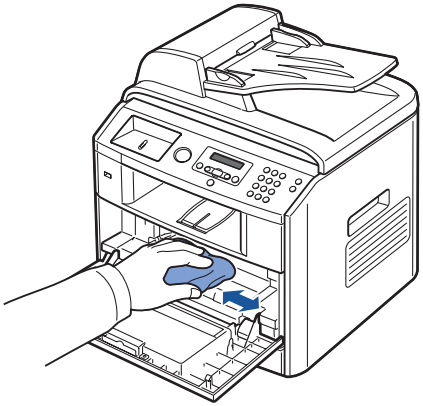

CAUTION: Do not touch the transfer roller inside the printer. Oil from your fingers may cause print quality problems.

4 Locate the long strip of glass (LSU) inside the top of the cartridge compartment, and gently swab the glass to see if dirt turns the white cotton black.

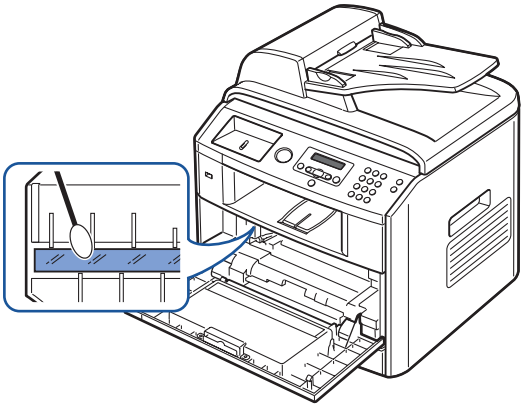

5 Reinsert the toner cartridge and close the front cover.

6 Plug in the power cord and power the printer on.

Cleaning the Scanner

Keeping the scanner and ADF glass clean ensure the highest quality copies and sent faxes. Dell recommends cleaning the scanner at the start of each day and during the day, as needed.

NOTE: If there are lines present on copied or faxed documents, check your scanner and ADF glass for any particles.

1 Slightly dampen a soft lint-free cloth or paper towel with water.

2 Open the document cover.

3 Wipe the surface of the scanner glass and ADF glass until it is clean and dry.

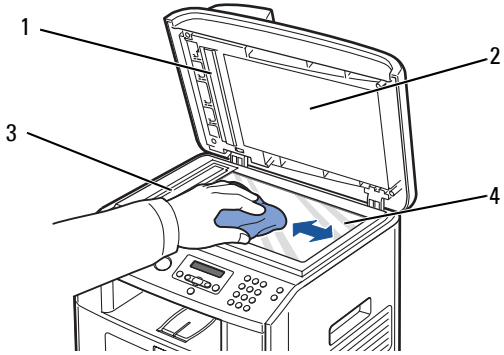

1	White Sheet
2	Document Cover
3	ADF Glass
4	Scanner Glass

4 Wipe the underside of the white document cover and white sheet until it is clean and dry.

5 Close the document cover.

Cleaning the Drum

If there are streaks or spots on your print, the Organic Photo Conductor (OPC) drum of the toner cartridge may require cleaning.

1 Before setting the cleaning procedure, make sure that paper is loaded in the paper tray.

2 Press **Scroll** (◁ or ▷) to highlight **Menu** and press **Select** (✓).

3 Press **Scroll** (◁ or ▷) to highlight **Maintenance** and press **Select** (✓).

The first available menu item, **Clean Drum**, displays on the bottom line.

4 Press **Select** (✓) twice.

The display confirms your selection.

The printer prints out a cleaning page. Toner particles on the drum surface are affixed to the paper.

5 *If the problem remains,* repeat steps 3 through 4 until toner particles are not affixed to the paper.

6

Troubleshooting

Clearing Jams in the ADF

When a document jams while it passes through the ADF, **Document Jam** appears on the display.

NOTE: To prevent document jams, use the document glass for thick, thin or mixed documents.

1 Remove the remaining documents from the ADF.

If the document is jammed in the paper feed area:

a Open the ADF cover.

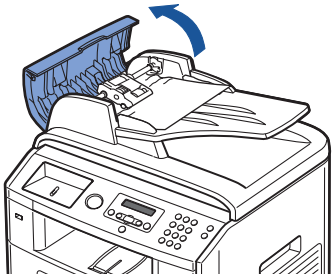

b Remove the document by gently pulling it out.

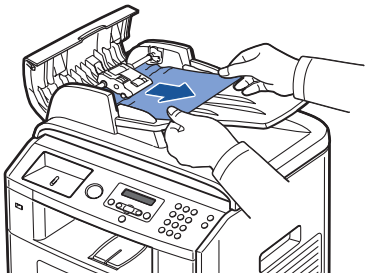

c Close the ADF cover. Then reload the document into the ADF.

If the document is jammed in the paper exit area:

a Open the document cover and turn the release knob to remove the misfed documents from the document output tray.

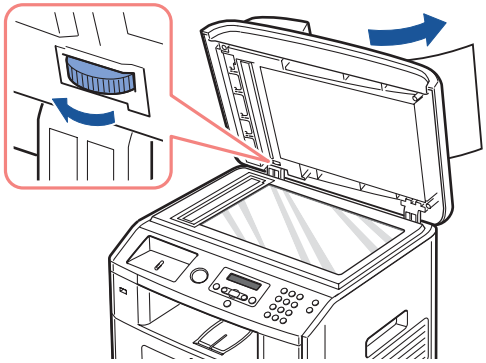

b Close the document cover. Then load the documents back into the ADF.

2 *If you cannot see the paper or the paper does not move when you pulled,* open the document cover.

3 Turn the release knob so that you can easily seize the misfed document, and remove the document from the roller or the feed area by carefully pulling it gently to the right.

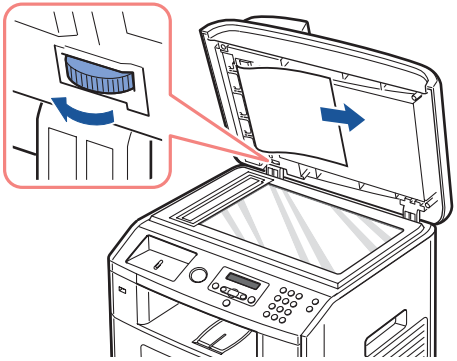

4 Close the document cover. Then load the documents back into the ADF.

Clearing Jams in the Paper Paths

When a paper jam occurs, **Paper Jam** appears on the display. Refer to the table below to locate and clear the paper jam.

Operator Panel Message	Location of Jam	Go to
Paper Jam 0 **Open Front Door**	Paper Feed Jam (tray 1) Paper Feed Jam (optional tray 2)	page 81 or page 82.
Paper Jam 1 **Cartridge Area**	Fuser Area Jam	page 84.
Pager Jam 2 **Open Rear Door**	Paper Exit Jam	page 85.
Duplex jam 0[a] **Check Inside**	in the duplex unit	page 89.
Duplex jam 1[a] **Check Inside**	between the duplex unit and fuser area	page 87.

a. Dell Laser MFP 1815dn only

To avoid tearing the paper, pull the jammed paper out gently and slowly. Follow the steps below to clear the jam.

Paper Feed Jam (tray 1)

1 Open and close the front cover. The jammed paper automatically exits the printer.

If the paper does not exit, go to the next step.

2 Pull the paper tray open.

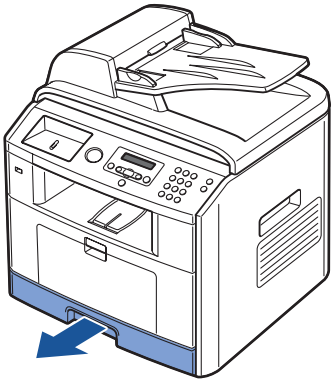

3 Remove the paper by gently pulling it straight out.

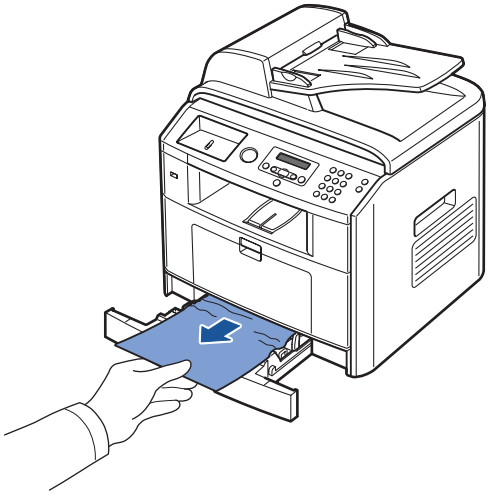

If you cannot see the paper or the paper does not move when pulled, check the fuser area. For more information, see "Fuser Area Jam" on page 84.

4 Insert the paper tray into the printer until it snaps into place.

Printing automatically resumes.

Paper Feed Jam (optional tray 2)

1 Pull the optional tray 2 open.

2 Remove the jammed paper from the printer.

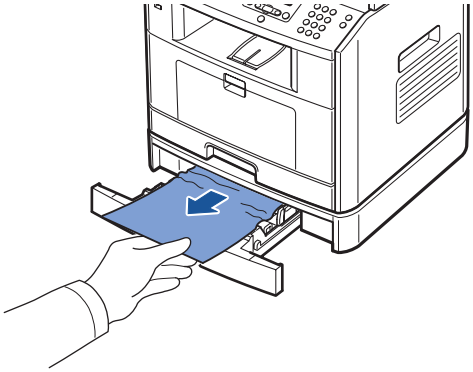

If you cannot see the paper in this area or the paper does not move when pulled, go to the next step.

3 Pull the tray 1 half.

4 Pull the paper straight up and out.

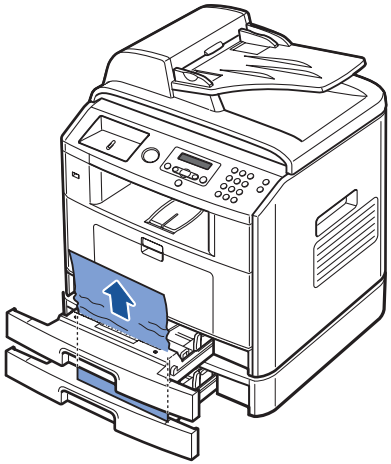

5 Insert the trays back into the printer.

Printing automatically resumes.

Bypass Tray Jam

1 *If the paper is not feeding properly,* pull the paper out of the printer.

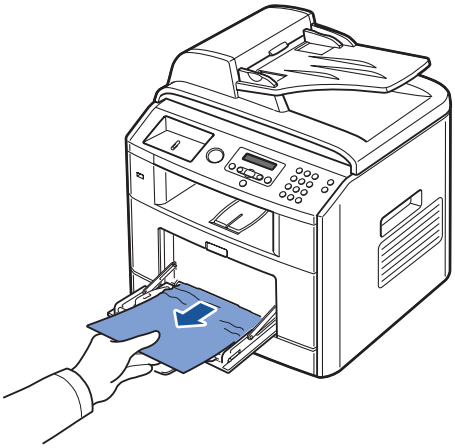

2 Open and close the front cover to resume printing.

Fuser Area Jam

NOTICE: The fuser area is hot. Take care when removing paper from the printer.

1 Open the front cover and lightly pull the toner cartridge straight out.

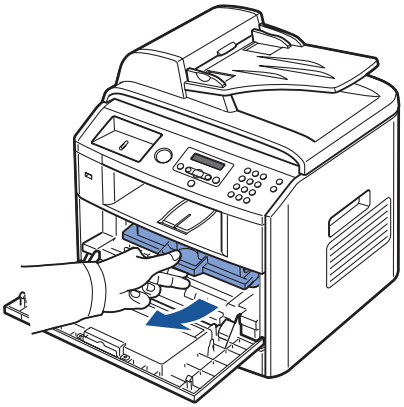

2 Remove the paper by gently pulling it straight out.

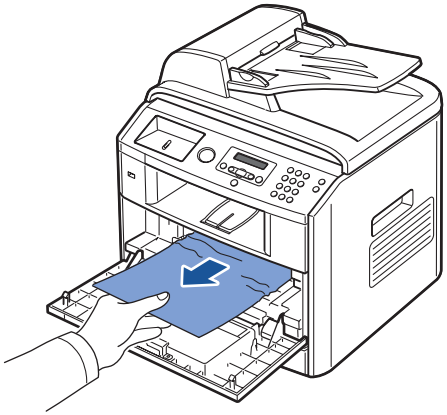

3 Replace the toner cartridge and close the front cover.

Printing automatically resumes.

Paper Exit Jam

1 Open and close the front cover. The jammed paper automatically exits the printer.

If the paper does not exit, go to the next step.

2 Gently pull the paper out of the output tray.

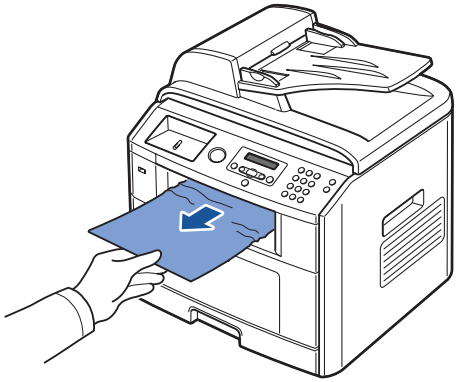

3 *If you cannot see the paper in th*e output tray or the paper does not move when pulled, open the rear cover.

4 *If you see the jammed paper,* push the two blue pressure levers up and remove the paper. Push the levers down and skip to step 10.

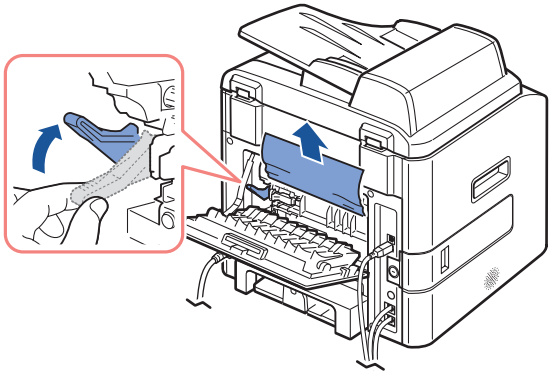

If you do not see the paper, go to the next step.

5 Release the blue strap, the rear cover stopper, and fully open the rear cover, as shown.

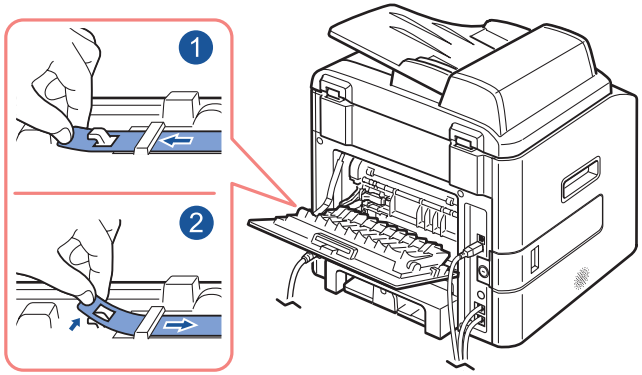

6 Unfold the duplex guide fully.

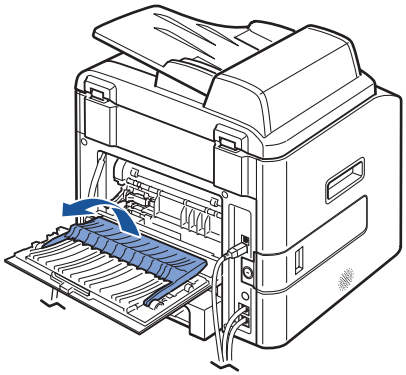

7 While pushing the fuser lever to the right, open the fuser door.

NOTE: Make sure to unfold the fuser guide before opening the fuser door or you may damage the fuser door.

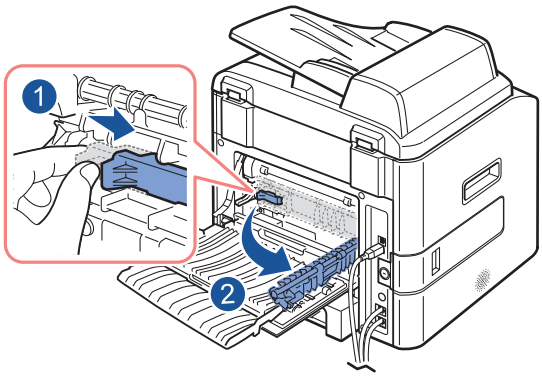

8 Pull the jammed paper out.

If the jammed paper does not move when you pull, push the two blue pressure levers up to loosen the paper, and then remove it.

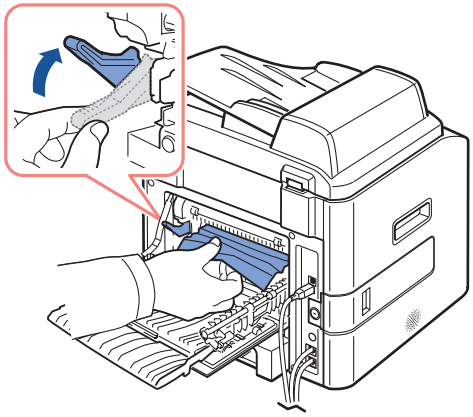

9 Return the levers, fuser door, duplex guide, and rear cover stopper to their original position.

10 Close the rear cover.

Printing automatically resumes.

Duplex Jam (Dell Laser MFP 1815dn only)

Duplex Jam 0

1 Pull the duplex unit out of the printer.

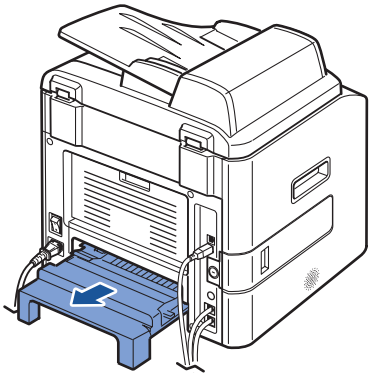

2 Remove the jammed paper from the duplex unit.

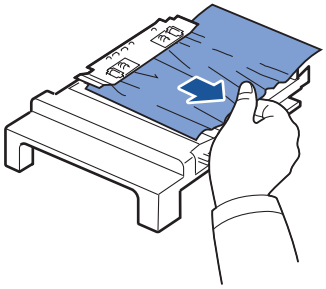

If the paper does not come out with the duplex unit, remove the paper from the bottom of the printer.

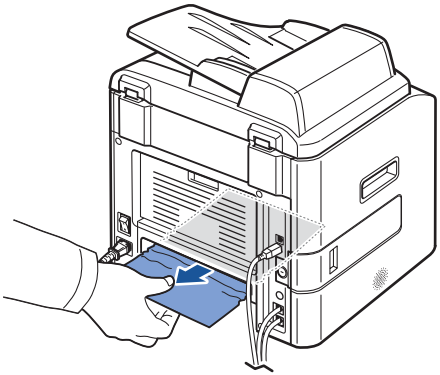

3 Push the duplex unit to the printer.

CAUTION: ***If you do not push the duplex unit in correctly, a*** **paper jam may occur.**

Duplex Jam 1

1 Open the rear cover.

2 Unfold the duplex guide fully.

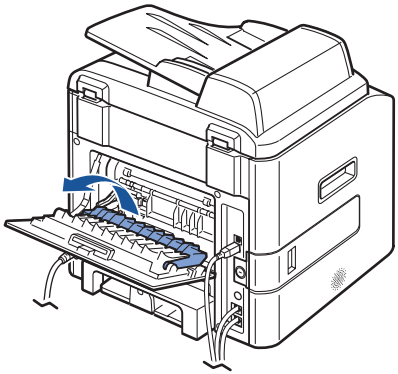

3 Pull the jammed paper out.

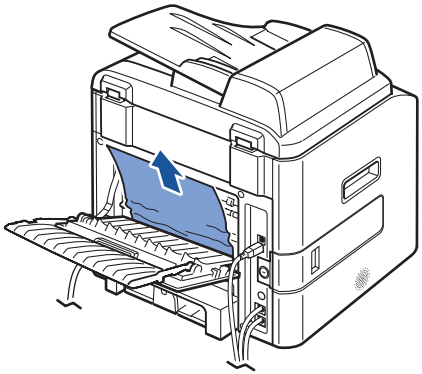

4 Return the duplex guide and close the rear cover.

Printing automatically resumes.

Tips for Avoiding Paper Jams

By selecting the correct paper types, most paper jams can be avoided. When a paper jam occurs, follow the steps outlined in "Clearing Jams in the Paper Paths" on page 81.

- Follow the procedures in "Loading Paper" on page 38. Ensure that the adjustable guides are correctly positioned.
- Do not overload the paper tray. Ensure that the paper is below the paper capacity mark on the inside wall of the paper tray.
- Do not remove the paper from the tray while your printer is printing.
- Flex, fan and straighten the paper before loading.
- Do not use creased, damp or curled paper.
- Do not mix paper types in the paper tray.
- Use only recommended print materials.
- Ensure that the recommended print side of print materials is facing down in the paper tray and facing up in the bypass tray.
- *If you use the Dell Laser MFP 1815dn,* ensure that the duplex unit is installed correctly.

More Troubleshooting

For more information about error messages or printing problems, see the *User's Guide*.

7

Installing Options

Precautions When Installing Printer Accessories

DISCONNECTING THE POWER CORD:

Never remove the control board cover while the printer is plugged in.

To avoid the possibility of an electrical shock, always disconnect the power cord when installing or removing ANY internal or external printer option.

DISCHARGE OF STATIC ELECTRICITY:

The control board and internal printer memory are sensitive to static electricity. Before installing or removing an internal printer memory, discharge static electricity from your body by touching something metal on any device plugged into a grounded power source. *If you walk around before finishing installation,* discharge any static electricity once again.

Installing Printer Memory

Additional printer memory is provided on a Dual In-line Memory Module (DIMM).

The MFP 1815n has 64 MB of memory and the MFP 1815dn has 92 MB of memory. Both can be expanded to 192 MB. However, MFP 1815dn user must remove the preinstalled memory DIMM before upgrading the memory.

NOTE: Your printer supports only Dell DIMMs. Order Dell DIMMs online at www.dell.com.

1 Power the printer off and unplug all cables from the printer.

2 Grab the control board cover and open it.

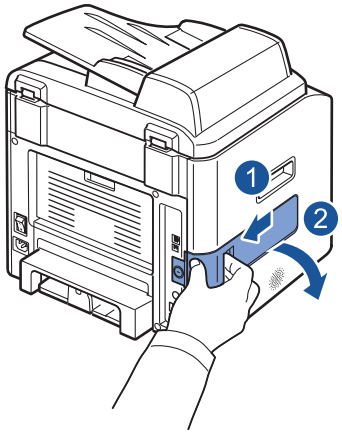

3 Completely open the latches on each side of the DIMM slot.

If you are using a Dell Laser MFP 1815dn, remove the preinstalled memory DIMM.

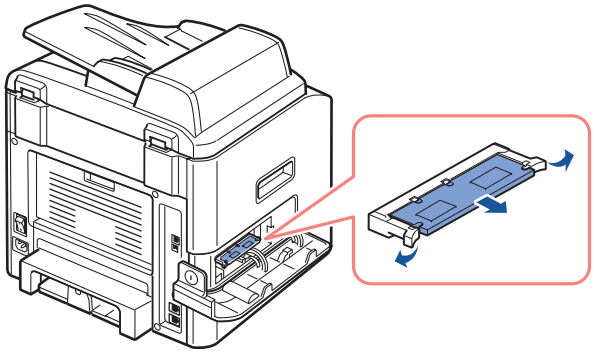

4 Remove a new memory DIMM from its antistatic package.

5 Holding the memory DIMM by the edges, align the notches on the memory DIMM with the grooves at the top of the memory DIMM slot.

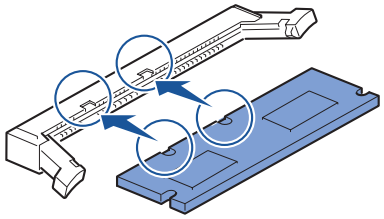

6 Push the DIMM straight into the DIMM slot until it snaps into place. Make sure the latches fit over the notches located on either side of the DIMM.

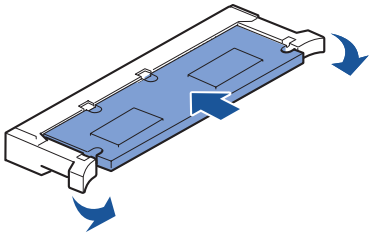

7 Close the control board cover.

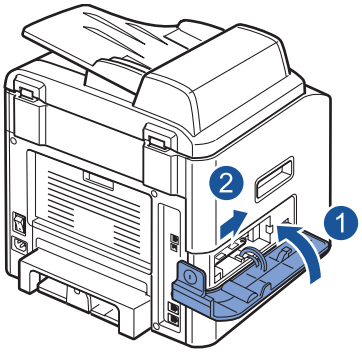

8 Reconnect the power cord and printer cable, and turn the printer on.

Activating the Added Memory in the PS Printer Properties

After installing the memory DIMM, you need to select it in the printer properties of the PostScript printer driver so that you can use it:

1 Make sure that the PostScript printer driver is installed on your computer. For details about installing the PS printer driver, see "Installing Dell Software For Local Printing" on page 30.

2 Click the Windows **Start** menu.

3 For Windows 98/Me/NT 4.0/2000, select **Settings** and then **Printers**.

For Windows XP, select **Printers and Faxes**.

4 Select the **Dell Laser MFP 1815 PS** printer.

5 Right-click the printer icon and:

In Windows 98/Me, click **Properties**.

In Windows 2000/XP, click **Print Setup** or click **Properties** and then point to **Printing Preferences**.

In Windows NT 4.0, click **Document Default**.

6 For Windows 98/Me, select **Device Options**.

For Windows NT 4.0/2000/XP, select **Device Settings**.

7 Select the memory DIMM you installed from **Printer Memory** in the **Installable Option** section.

For Windows 98, select **Installable Option** → **VMOption** → **change setting for:VMOption** → **change memory**.

8 Click **OK**.

Installing an Optional Tray 2

You can increase the paper handling capacity of your printer by installing an optional tray 2. This tray holds 250 sheets of paper.

1 Power the printer off and unplug all cables from the printer.

2 Remove the packing tape and the tape fastening the optional tray 2 cable from the bottom of the optional tray 2.

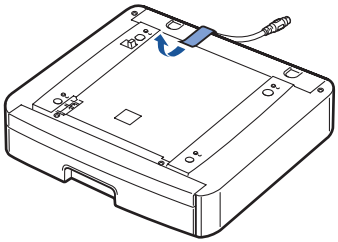

3 Find the location of the connector and the optional tray positioners.

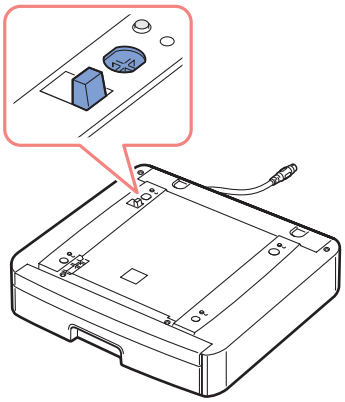

4 Place the printer over the tray, aligning the feet on the printer with the positioners in the optional tray 2.

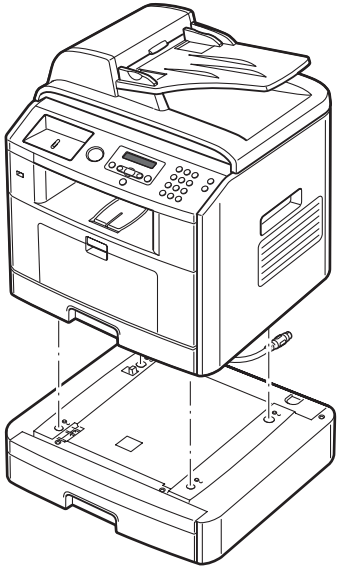

5 Connect the cable into the connector on the back of the printer.

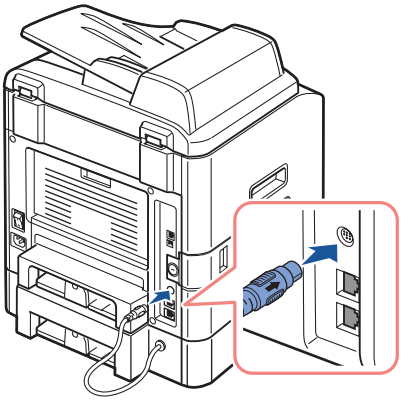

6 Load paper in the optional tray 2. For information about loading paper in this tray, see "Using the Paper Tray" on page 38.

7 Reconnect the power cord and printer cable, and turn the printer on.

Activating the Installed Optional Tray 2 in the Printer Properties

When you print a document on paper loaded in the optional tray 2, you must configure the properties of the printer driver.

To access the properties of the printer driver:

1 Click the Windows **Start** button.

2 For Windows 98/Me/NT 4.0/2000, click **Settings** and point to **Printers**.

For Windows XP, click **Printers and Faxes**.

3 Click the **Dell Laser MFP 1815** printer.

4 Right-click the printer icon and:

In Windows 98/Me, click **Properties**.

In Windows 2000/XP, click **Print Setup** or click **Properties** and then point to **Printing Preferences**.

In Windows NT 4.0, click **Document Default**.

5 Click the **Printer** tab, and select **Tray 2** from the **Option Tray** drop-down list.

6 Click **OK** and print the document.

To set the tray in the printer properties of the PostScript printer driver.

1 Click the Widows **Start** button.

2 For Windows 98/Me/NT4.0/2000, select **Settings** and then **Printers**.

For Windows XP, select **Printers and Faxes**.

3 Select **Dell Laser MFP 1815 PS** printer.

4 Right-click the printer icon and:

In Windows 98/Me, click **Properties**.

In Windows 2000/XP, click **Print Setup** or click **Properties** and then point to **Printing Preferences**.

In Windows NT 4.0, click **Document Default**.

5 Click the **Device Setting** tab, and select **Installed** from the **Tray 2** drop-down list.

6 Click **OK**.

8

Contacting Dell

Technical Assistance

If you need help with a technical problem, Dell is ready to assist you.

1 Call technical support from a telephone near or at the printer so that technical support can assist you with any necessary procedures. When calling Dell, use your Express Service Code to help expedite the routing of your call to the proper support personnel.

The Express Service Code is located on the front of the printer, as shown below.

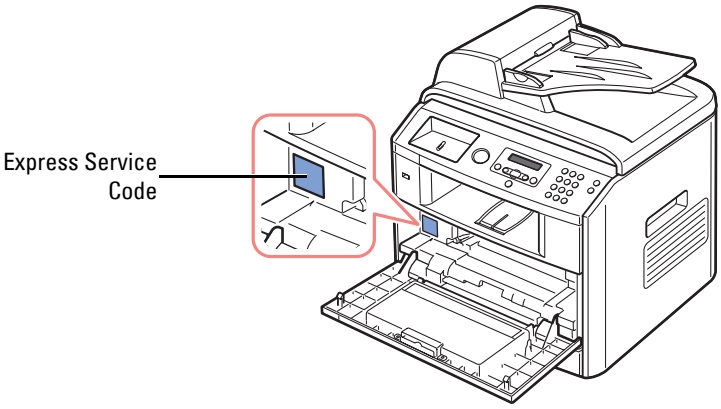

NOTE: Dell's Express Service Code system may not be available in all countries.

2 In the U.S., Business customers should call 1-877-459-7298, and Consumer (Home and Home Office) customers should call 1-800-624-9896.

If you are calling from a different country or are in a different Service area, see "Contacting Dell" on page 98 for your local telephone number.

3 Follow the menu prompts in the automated telephone system to speak with a technical support representative.

Automated Order-Status Service

To check on the status of any Dell products that you have ordered, you can go to **support.dell.com**, or you can call the automated order-status service. A recording prompts you for the information needed to locate and report on your order. See "Contacting Dell" for the telephone number to call for your region.

Contacting Dell

To contact Dell electronically, you can access the following websites:

- **www.dell.com**
- **support.dell.com** (technical support)
- **premier.dell.com** (technical support for educational, government, healthcare, and medium/large business customers, including Premier, Platinum, and Gold customers)

For specific web addresses for your country, find the appropriate country section in the table below.

NOTE: Toll-free numbers are for use within the country for which they are listed.

When you need to contact Dell, use the electronic addresses, telephone numbers, and codes provided in the following table. If you need assistance in determining which codes to use, contact a local or an international operator.

Country (City) International Access Code Country Code City Code	Department Name or Service Area, Website and E-Mail Address	Area Codes, Local Numbers, and Toll-Free Numbers
U.S.A. (Austin, Texas)	Automated Order-Status Service	toll-free: 1-800-433-9014
International Access Code: **011**	AutoTech (portable and desktop computers)	toll-free: 1-800-247-9362
Country Code: **1**	**Consumer** (Home and Home Office)	
	Technical Support	toll-free: 1-800-624-9896
	Customer Service	toll-free: 1-800-624-9897
	DellNet™ Service and Support	toll-free: 1-877-Dellnet (1-877-335-5638)
	Employee Purchase Program (EPP) Customers	toll-free: 1-800-695-8133
	Financial Services website: **www.dellfinancialservices.com**	
	Financial Services (lease/loans)	toll-free: 1-877-577-3355
	Financial Services (Dell Preferred Accounts [DPA])	toll-free: 1-800-283-2210
	Business	
	Customer Service and Technical Support	toll-free: 1-877-459-7298
	Employee Purchase Program (EPP) Customers	toll-free: 1-800-695-8133
	Projectors Technical Support	toll-free: 1-877-459-7298
	Public (government, education, and healthcare)	
	Customer Service and Technical Support	toll-free: 1-800-456-3355
	Employee Purchase Program (EPP) Customers	toll-free: 1-800-234-1490
	Dell Sales	toll-free: 1-800-289-3355 or toll-free: 1-800-879-3355
	Dell Outlet Store (Dell refurbished computers)	toll-free: 1-888-798-7561
	Software and Peripherals Sales	toll-free: 1-800-671-3355
	Spare Parts Sales	toll-free: 1-800-357-3355
	Extended Service and Warranty Sales	toll-free: 1-800-247-4618
	Fax	toll-free: 1-800-727-8320
	Dell Services for the Deaf, Hard-of-Hearing, or Speech-Impaired	toll-free: 1-877-DELLTTY (1-877-335-5889)

Country (City) International Access Code Country Code City Code	Department Name or Service Area, Website and E-Mail Address	Area Codes, Local Numbers, and Toll-Free Numbers
Austria (Vienna)	Website: **support.euro.dell.com**	
International Access Code: **900**	E-mail: tech_support_central_europe@dell.com	
Country Code: **43**	Home/Small Business Sales	0820 240 530 00
City Code: **1**	Home/Small Business Fax	0820 240 530 49
	Home/Small Business Customer Care	0820 240 530 14
	Preferred Accounts/Corporate Customer Care	0820 240 530 16
	Home/Small Business Technical Support	0820 240 530 14
	Preferred Accounts/Corporate Technical Support	0660 8779
	Switchboard	0820 240 530 00
Belgium (Brussels)	Website: **support.euro.dell.com**	
International Access Code: **00**	E-mail: tech_be@dell.com	
Country Code: **32**	E-mail for French Speaking Customers: **support.euro.dell.com/be/fr/emaildell/**	
City Code: **2**		
	Technical Support	02 481 92 88
	Customer Care	02 481 91 19
	Corporate Sales	02 481 91 00
	Fax	02 481 92 99
	Switchboard	02 481 91 00
Canada (North York, Ontario)	Online Order Status: **www.dell.ca/ostatus**	
International Access Code: **011**	AutoTech (automated technical support)	toll-free: 1-800-247-9362
	TechFax	toll-free: 1-800-950-1329
	Customer Care (Home Sales/Small Business)	toll-free: 1-800-847-4096
	Customer Care (med./large business, government)	toll-free: 1-800-326-9463
	Technical Support (Home Sales/Small Business)	toll-free: 1-800-847-4096
	Technical Support (med./large bus., government)	toll-free: 1-800-387-5757
	Sales (Home Sales/Small Business)	toll-free: 1-800-387-5752
	Sales (med./large bus., government)	toll-free: 1-800-387-5755
	Spare Parts Sales & Extended Service Sales	1 866 440 3355
Colombia	General Support	980-9-15-3978

Country (City) International Access Code Country Code City Code	Department Name or Service Area, Website and E-Mail Address	Area Codes, Local Numbers, and Toll-Free Numbers
Czech Republic (Prague)	Website: **support.euro.dell.com**	
International Access Code: **00**	E-mail: czech_dell@dell.com	
Country Code: **420**	Technical Support	02 2186 27 27
City Code: **2**	Customer Care	02 2186 27 11
	Fax	02 2186 27 14
	TechFax	02 2186 27 28
	Switchboard	02 2186 27 11
Denmark (Copenhagen)	Website: **support.euro.dell.com**	
International Access Code: **00**	E-mail Support (portable computers): den_nbk_support@dell.com	
Country Code: **45**	E-mail Support (desktop computers): den_support@dell.com	
	E-mail Support (servers): Nordic_server_support@dell.com	
	Technical Support	7023 0182
	Customer Care (Relational)	7023 0184
	Home/Small Business Customer Care	3287 5505
	Switchboard (Relational)	3287 1200
	Fax Switchboard (Relational)	3287 1201
	Switchboard (Home/Small Business)	3287 5000
	Fax Switchboard (Home/Small Business)	3287 5001
Finland (Helsinki)	Website: **support.euro.dell.com**	
International Access Code: **990**	E-mail: fin_support@dell.com	
Country Code: **358**	E-mail Support (servers): Nordic_support@dell.com	
City Code: **9**	Technical Support	09 253 313 60
	Technical Support Fax	09 253 313 81
	Relational Customer Care	09 253 313 38
	Home/Small Business Customer Care	09 693 791 94
	Fax	09 253 313 99
	Switchboard	09 253 313 00

Country (City) International Access Code Country Code City Code	Department Name or Service Area, Website and E-Mail Address	Area Codes, Local Numbers, and Toll-Free Numbers
France (Paris) (Montpellier)	Website: **support.euro.dell.com**	
International Access Code: **00**	E-mail: **support.euro.dell.com/fr/fr/emaildell/**	
Country Code: **33**	**Home and Small Business**	
City Codes: **(1) (4)**	Technical Support	0825 387 270
	Customer Care	0825 823 833
	Switchboard	0825 004 700
	Switchboard (calls from outside of France)	04 99 75 40 00
	Sales	0825 004 700
	Fax	0825 004 701
	Fax (calls from outside of France)	04 99 75 40 01
	Corporate	
	Technical Support	0825 004 719
	Customer Care	0825 338 339
	Switchboard	01 55 94 71 00
	Sales	01 55 94 71 00
	Fax	01 55 94 71 01
Germany (Langen)	Website: **support.euro.dell.com**	
International Access Code: **00**	E-mail: tech_support_central_europe@dell.com	
Country Code: **49**	Technical Support	06103 766-7200
City Code: **6103**	Home/Small Business Customer Care	0180-5-224400
	Global Segment Customer Care	06103 766-9570
	Preferred Accounts Customer Care	06103 766-9420
	Large Accounts Customer Care	06103 766-9560
	Public Accounts Customer Care	06103 766-9555
	Switchboard	06103 766-7000

Country (City) International Access Code Country Code City Code	Department Name or Service Area, Website and E-Mail Address	Area Codes, Local Numbers, and Toll-Free Numbers
Ireland (Cherrywood)	Website: **support.euro.dell.com**	
International Access Code: **16**	E-mail: dell_direct_support@dell.com	
Country Code: **353**	Technical Support	1850 543 543
City Code: **1**	U.K. Technical Support (dial within U.K. only)	0870 908 0800
	Home User Customer Care	01 204 4014
	Small Business Customer Care	01 204 4014
	U.K. Customer Care (dial within U.K. only)	0870 906 0010
	Corporate Customer Care	1850 200 982
	Corporate Customer Care (dial within U.K. only)	0870 907 4499
	Ireland Sales	01 204 4444
	U.K. Sales (dial within U.K. only)	0870 907 4000
	Fax/SalesFax	01 204 0103
	Switchboard	01 204 4444
Italy (Milan)	Website: **support.euro.dell.com**	
International Access Code: **00**	E-mail: **support.euro.dell.com/it/it/emaildell/**	
Country Code: **39**	**Home and Small Business**	
City Code: **02**	Technical Support	02 577 826 90
	Customer Care	02 696 821 14
	Fax	02 696 821 13
	Switchboard	02 696 821 12
	Corporate	
	Technical Support	02 577 826 90
	Customer Care	02 577 825 55
	Fax	02 575 035 30
	Switchboard	02 577 821
Luxembourg	Website: **support.euro.dell.com**	
International Access Code: **00**	E-mail: tech_be@dell.com	
Country Code: **352**	Technical Support (Brussels, Belgium)	3420808075
	Home/Small Business Sales (Brussels, Belgium)	toll-free: 080016884
	Corporate Sales (Brussels, Belgium)	02 481 91 00
	Customer Care (Brussels, Belgium)	02 481 91 19
	Fax (Brussels, Belgium)	02 481 92 99
	Switchboard (Brussels, Belgium)	02 481 91 00

Country (City) International Access Code Country Code City Code	Department Name or Service Area, Website and E-Mail Address	Area Codes, Local Numbers, and Toll-Free Numbers
Mexico	Customer Technical Support	001-877-384-8979
International Access Code: **00**		or 001-877-269-3383
Country Code: **52**	Sales	50-81-8800
		or 01-800-888-3355
	Customer Service	001-877-384-8979
		or 001-877-269-3383
	Main	50-81-8800
		or 01-800-888-3355
Netherlands Antilles	General Support	001-800-882-1519
Netherlands (Amsterdam)	Website: **support.euro.dell.com**	
International Access Code: **00**	E-mail (Technical Support):	
Country Code: **31**	(Enterprise): nl_server_support@dell.com	
City Code: **20**	(Latitude): nl_latitude_support@dell.com	
	(Inspiron): nl_inspiron_support@dell.com	
	(Dimension): nl_dimension_support@dell.com	
	(OptiPlex): nl_optiplex_support@dell.com	
	(Dell Precision): nl_workstation_support@dell.com	
	Technical Support	020 674 45 00
	Technical Support Fax	020 674 47 66
	Home/Small Business Customer Care	020 674 42 00
	Relational Customer Care	020 674 4325
	Home/Small Business Sales	020 674 55 00
	Relational Sales	020 674 50 00
	Home/Small Business Sales Fax	020 674 47 75
	Relational Sales Fax	020 674 47 50
	Switchboard	020 674 50 00
	Switchboard Fax	020 674 47 50

Country (City) International Access Code Country Code City Code	Department Name or Service Area, Website and E-Mail Address	Area Codes, Local Numbers, and Toll-Free Numbers
Norway (Lysaker)	Website: **support.euro.dell.com**	
International Access Code: **00**	E-mail Support (portable computers):	
Country Code: **47**	nor_nbk_support@dell.com	
	E-mail Support (desktop computers):	
	nor_support@dell.com	
	E-mail Support (servers):	
	nordic_server_support@dell.com	
	Technical Support	671 16882
	Relational Customer Care	671 17514
	Home/Small Business Customer Care	23162298
	Switchboard	671 16800
	Fax Switchboard	671 16865
Poland (Warsaw)	Website: **support.euro.dell.com**	
International Access Code: **011**	E-mail: pl_support_tech@dell.com	
Country Code: **48**	Customer Service Phone	57 95 700
City Code: **22**	Customer Care	57 95 999
	Sales	57 95 999
	Customer Service Fax	57 95 806
	Reception Desk Fax	57 95 998
	Switchboard	57 95 999
Portugal	Website: **support.euro.dell.com**	
International Access Code: **00**	E-mail: **support.euro.dell.com/pt/en/emaildell/**	
Country Code: **351**	Technical Support	707200149
	Customer Care	800 300 413
	Sales	800 300 410 or 800 300 411 or 800 300 412 or 21 422 07 10
	Fax	21 424 01 12
Puerto Rico	General Support	1-800-805-7545

Country (City) International Access Code Country Code City Code	Department Name or Service Area, Website and E-Mail Address	Area Codes, Local Numbers, and Toll-Free Numbers
South Africa (Johannesburg)	Website: **support.euro.dell.com**	
International Access Code:	E-mail: dell_za_support@dell.com	
09/091	Technical Support	011 709 7710
Country Code: **27**	Customer Care	011 709 7707
City Code: **11**	Sales	011 709 7700
	Fax	011 706 0495
	Switchboard	011 709 7700
Spain (Madrid)	Website: **support.euro.dell.com**	
International Access Code: **00**	E-mail: **support.euro.dell.com/es/es/emaildell/**	
Country Code: **34**	**Home and Small Business**	
City Code: **91**	Technical Support	902 100 130
	Customer Care	902 118 540
	Sales	902 118 541
	Switchboard	902 118 541
	Fax	902 118 539
	Corporate	
	Technical Support	902 100 130
	Customer Care	902 118 546
	Switchboard	91 722 92 00
	Fax	91 722 95 83

Country (City) International Access Code Country Code City Code	Department Name or Service Area, Website and E-Mail Address	Area Codes, Local Numbers, and Toll-Free Numbers
Sweden (Upplands Vasby) International Access Code: **00** Country Code: **46** City Code: 8	Website: **support.euro.dell.com**	
	E-mail: swe_support@dell.com	
	E-mail Support for Latitude and Inspiron: Swe-nbk_kats@dell.com	
	E-mail Support for OptiPlex: Swe_kats@dell.com	
	E-mail Support for Servers: Nordic_server_support@dell.com	
	Technical Support	08 590 05 199
	Relational Customer Care	08 590 05 642
	Home/Small Business Customer Care	08 587 70 527
	Employee Purchase Program (EPP) Support	20 140 14 44
	Fax Technical Support	08 590 05 594
	Sales	08 590 05 185
Switzerland (Geneva) International Access Code: **00** Country Code: **41** City Code: **22**	Website: **support.euro.dell.com**	
	E-mail: swisstech@dell.com	
	E-mail for French-speaking HSB and Corporate Customers: **support.euro.dell.com/ch/fr/emaildell/**	
	Technical Support (Home and Small Business)	0844 811 411
	Technical Support (Corporate)	0844 822 844
	Customer Care (Home and Small Business)	0848 802 202
	Customer Care (Corporate)	0848 821 721
	Fax	022 799 01 90
	Switchboard	022 799 01 01
Trinidad/Tobago	General Support	1-800-805-8035

Country (City) International Access Code Country Code City Code	Department Name or Service Area, Website and E-Mail Address	Area Codes, Local Numbers, and Toll-Free Numbers
U.K. (Bracknell)	Website: **support.euro.dell.com**	
International Access Code: **00**	Customer Care website: **support.euro.dell.com/uk/en/ECare/Form/Home.asp**	
Country Code: **44**		
City Code: **1344**	E-mail: dell_direct_support@dell.com	
	Technical Support (Corporate/Preferred Accounts/PAD [1000+ employees])	0870 908 0500
	Technical Support (direct/PAD and general)	0870 908 0800
	Global Accounts Customer Care	01344 373 186
	Home and Small Business Customer Care	0870 906 0010
	Corporate Customer Care	01344 373 185
	Preferred Accounts (500–5000 employees) Customer Care	0870 906 0010
	Central Government Customer Care	01344 373 193
	Local Government & Education Customer Care	01344 373 199
	Health Customer Care	01344 373 194
	Home and Small Business Sales	0870 907 4000
	Corporate/Public Sector Sales	01344 860 456
	Home and Small Business Fax	0870 907 4006
U.S. Virgin Islands	General Support	1-877-673-3355

9

Appendix

U.S. Terms and Conditions of Sale

PLEASE READ THIS DOCUMENT CAREFULLY! IT CONTAINS VERY IMPORTANT INFORMATION ABOUT YOUR RIGHTS AND OBLIGATIONS, AS WELL AS LIMITATIONS AND EXCLUSIONS THAT MAY APPLY TO YOU. THIS DOCUMENT CONTAINS A DISPUTE RESOLUTION CLAUSE.

These terms and conditions (“Agreement”) apply to your purchase of computer systems and/or related products and/or services and support sold in the United States (“Product”) by the Dell entity named on the invoice or acknowledgement ("Dell") provided to you. By accepting delivery of the Product, you accept and are bound to the terms and conditions of this Agreement. If you do not wish to be bound by this Agreement, you must notify Dell immediately and return your purchase pursuant to Dell's Return Policy. (See:**http://support.dell.com/ContactUs/ByPhone.aspx?c=us&l=en&s=gen** for our contact information.) If returned, Product(s) must remain in the boxes in which they were shipped. THIS AGREEMENT SHALL APPLY UNLESS (I) YOU HAVE A SEPARATE PURCHASE AGREEMENT WITH DELL, IN WHICH CASE THE SEPARATE AGREEMENT SHALL GOVERN; OR (II) OTHER DELL TERMS AND CONDITIONS APPLY TO THE TRANSACTION.

1. **Other Documents.** This Agreement may NOT be altered, supplemented, or amended by the use of any other document(s) unless otherwise agreed to in a written agreement signed by both you and Dell. If you do not receive an invoice or acknowledgement in the mail, via e-mail, or with your Product, information about your purchase may be obtained at **https://support.dell.com/dellcare/Invoice.aspx** or by contacting your sales representative.
2. **Payment Terms; Orders; Quotes; Interest.** Payment terms are within Dell's sole discretion, and, unless otherwise agreed to by Dell, payment must be made at the time of purchase. Payment for Product may be made by credit card, wire transfer, or some other prearranged payment method. Dell may invoice parts of an order separately. Your order is subject to cancellation by Dell, at Dell’s sole discretion. Unless you and Dell have agreed to a different discount, Dell’s standard pricing policy for Dell™-branded systems, which include both hardware and services in one discounted price, allocates the discount off list price applicable to the service portion of the system to be equal to the overall calculated percentage discount off list price on the entire system. Dell is not responsible for pricing, typographical, or other errors, in any offer by Dell and reserves the right to cancel any orders resulting from such errors.
3. **Shipping Charges; Taxes; Title; Risk of Loss.** Shipping and handling are additional unless otherwise expressly indicated at the time of sale. Loss or damage that occurs during shipping by a carrier selected by Dell is Dell's responsibility. Loss or damage that occurs during shipping by a carrier selected by you is your responsibility. You must notify Dell within 21 days of the date of your invoice or acknowledgement if you believe any part of your purchase is missing, wrong or damaged. Unless you provide Dell with a valid and correct tax exemption certificate applicable to your purchase of Product and the Product ship-to location, you are responsible for sales and other taxes associated with the order. Shipping dates are estimates only. Title to software will remain with the applicable licensor(s).
4. **Warranties.** THE LIMITED WARRANTIES APPLICABLE TO DELL-BRANDED HARDWARE PRODUCT CAN BE FOUND AT **http://www.dell.com/policy/legal/warranty.htm** OR IN THE DOCUMENTATION DELL PROVIDES WITH THE PRODUCT. DELL MAKES NO WARRANTIES FOR SERVICE, SOFTWARE, OR NON-DELL BRANDED PRODUCT. SUCH PRODUCT IS PROVIDED BY DELL “AS IS”. WARRANTY AND SERVICE FOR NON-DELL BRANDED PRODUCT, IF ANY, IS PROVIDED BY THE ORIGINAL MANUFACTURER, NOT BY DELL. DELL MAKES NO EXPRESS WARRANTIES EXCEPT THOSE STATED IN DELL'S APPLICABLE WARRANTY STATEMENT IN EFFECT ON THE DATE OF THE INVOICE, PACKING SLIP OR ACKNOWLEDGEMENT. WARRANTIES AND SERVICE WILL BE EFFECTIVE, AND DELL WILL BE OBLIGATED TO HONOR ANY SUCH WARRANTIES AND SERVICES, ONLY UPON DELL'S RECEIPT OF PAYMENT IN FULL FOR THE ITEM TO BE WARRANTED OR SERVICED.

5 **Software**. All software is provided subject to the license agreement that is part of the software package and you agree that you will be bound by such license agreement.

6 **Return Policies; Exchanges.** Dell's return policy can be found at **http://www.dell.com/policy/legal/warranty.htm**. You must contact us directly before you attempt to return Product to obtain a Return Material Authorization Number for you to include with your return. You must return Product to us in their original or equivalent packaging. You are responsible for risk of loss, shipping and handling fees for returning or exchanging Product. Additional fees may apply. If you fail to follow the return or exchange instructions and policies provided by Dell, Dell is not responsible whatsoever for Product that is lost, damaged, modified or otherwise processed for disposal or resale. At Dell's discretion, credit for partial returns may be less than invoice or individual component prices due to bundled or promotional pricing.

7 **Changed or Discontinued Product.** Dell's policy is one of ongoing update and revision. Dell may revise and discontinue Product at any time without notice to you and this may affect information saved in your online "cart." Dell will ship Product that have the functionality and performance of the Product ordered, but changes between what is shipped and what is described in a specification sheet or catalog are possible. Parts used in repairing or servicing Product may be new, equivalent-to-new, or reconditioned.

8 **Service and Support.** Service offerings may vary from Product to Product. If you purchase optional services and support from Dell, Dell and/or your third-party service provider will provide such service and support to you in the United States in accordance with the terms and conditions located at **http://www.dell.com/us/en/gen/services/service_service_contracts.htm** or as mailed to you. You may contact Dell for more information, see **http://www1.us.dell.com/content/topics/segtopic.aspx/contact/contact?c=us&l=en&s=gen** for contact information. Dell and/or the third-party service provider may at their discretion, revise their general and optional service and support programs and the terms and conditions that govern them without prior notice to you. Dell has no obligation to provide service or support until Dell has received full payment for the Product or service/support contract you purchased. Dell is not obligated to provide service or support you purchase through a third party and not Dell.

9 **Limitation of Liability.** DELL DOES NOT ACCEPT LIABILITY BEYOND THE REMEDIES SET FORTH HEREIN, INCLUDING BUT NOT LIMITED TO ANY LIABILITY FOR PRODUCT NOT BEING AVAILABLE FOR USE, LOST PROFITS, LOSS OF BUSINESS OR FOR LOST OR CORRUPTED DATA OR SOFTWARE, OR THE PROVISION OF SERVICES AND SUPPORT. EXCEPT AS EXPRESSLY PROVIDED HEREIN, DELL WILL NOT BE LIABLE FOR ANY CONSEQUENTIAL, SPECIAL, INDIRECT, OR PUNITIVE DAMAGES, EVEN IF ADVISED OF THE POSSIBILITY OF SUCH DAMAGES, OR FOR ANY CLAIM BY ANY THIRD PARTY. YOU AGREE THAT FOR ANY LIABILITY RELATED TO THE PURCHASE OF PRODUCT, DELL IS NOT LIABLE OR RESPONSIBLE FOR ANY AMOUNT OF DAMAGES ABOVE THE AMOUNT INVOICED FOR THE APPLICABLE PRODUCT. NOTWITHSTANDING ANYTHING IN THIS AGREEMENT TO THE CONTRARY, THE REMEDIES SET FORTH IN THIS AGREEMENT SHALL APPLY EVEN IF SUCH REMEDIES FAIL THEIR ESSENTIAL PURPOSE. **DELL IS NOT LIABLE TO YOU FOR WARRANTIES, SUPPORT, OR SERVICE MADE BY OR PURCHASED FROM A THIRD PARTY AND NOT DIRECTLY FROM DELL. DELL IS NOT RESPONSIBLE FOR REPRESENTATIONS OR OMISSIONS MADE BY A THIRD PARTY.**

10 **Applicable Law; Not For Resale or Export.** You agree to comply with all applicable laws and regulations of the various states and of the United States. You agree and represent that you are buying only for your own internal use only, and not for resale or export. Dell has separate terms and conditions governing resale of Product by third parties and transactions outside the United States. Terms and conditions for resale are located at: **www.dell.com/policy/legal/termsofsale.htm**.

11 **Governing Law. THE PARTIES AGREE THAT THIS AGREEMENT, ANY SALES THERE UNDER, OR ANY CLAIM, DISPUTE OR CONTROVERSY (WHETHER IN CONTRACT, TORT, OR OTHERWISE, WHETHER PREEXISTING, PRESENT OR FUTURE, AND INCLUDING STATUTORY, COMMON LAW, AND EQUITABLE CLAIMS) BETWEEN CUSTOMER AND DELL arising from or relating to this agreement, its interpretation, or the breach, termination or validity thereof, the relationships which result from this agreement, Dell's advertising, or any related purchase SHALL, TO THE MAXIMUM EXTENT PERMITTED BY APPLICABLE LAW, BE GOVERNED BY THE LAWS OF THE STATE OF TEXAS, WITHOUT REGARD TO CONFLICTS OF LAWS RULES.**

12 **Headings.** The section headings used herein are for convenience of reference only and do not form a part of these terms and conditions, and no construction or inference shall be derived there from.

13 **Binding Arbitration.** ANY CLAIM, DISPUTE, OR CONTROVERSY (WHETHER IN CONTRACT, TORT, OR OTHERWISE, WHETHER PREEXISTING, PRESENT OR FUTURE, AND INCLUDING STATUTORY, COMMON LAW, INTENTIONAL TORT AND EQUITABLE CLAIMS) BETWEEN CUSTOMER AND DELL, its agents, employees, principals, successors, assigns, affiliates (collectively for purposes of this paragraph, "Dell") arising from or relating to this Agreement, its interpretation, or the breach, termination or validity thereof, the relationships which result from this Agreement (including, to the full extent permitted by applicable law, relationships with third parties who are not signatories to this Agreement), Dell's advertising, or any related purchase SHALL BE RESOLVED EXCLUSIVELY AND FINALLY BY BINDING ARBITRATION ADMINISTERED BY THE NATIONAL ARBITRATION FORUM (NAF) under its Code of Procedure then in effect (available via the Internet at **http://www.arb-forum.com**, or via telephone at 1-800-474-2371). The arbitration will be limited solely to the dispute or controversy between customer and Dell. NEITHER CUSTOMER NOR DELL SHALL BE ENTITLED TO JOIN OR CONSOLIDATE CLAIMS BY OR AGAINST OTHER CUSTOMERS, OR ARBITRATE ANY CLAIM AS A REPRESENTATIVE OR CLASS ACTION OR IN A PRIVATE ATTORNEY GENERAL CAPACITY. This transaction involves interstate commerce, and this provision shall be governed by the Federal Arbitration Act 9 U.S.C. sec. 1-16 (FAA). Any award of the arbitrator(s) shall be final and binding on each of the parties, and may be entered as a judgment in any court of competent jurisdiction. Dell will be responsible for paying any arbitration filing fees and fees required to obtain a hearing to the extent such fees exceed the amount of the filing fee for initiating a claim in the court of general jurisdiction in the state in which you reside. Each party shall pay for its own costs and attorneys' fees, if any. However, if any party prevails on a statutory claim that affords the prevailing party attorneys' fees, or if there is a written agreement providing for fees, the Arbitrator may award reasonable fees to the prevailing party, under the standards for fee shifting provided by law. Information may be obtained and claims may be filed with the NAF at P.O. Box 50191, Minneapolis, MN 55405. (REV 8/11)

Limited Warranties and Return Policy

Dell-branded hardware products purchased in the U.S. or Canada come with either a 90-day, 1-year, 2-year, 3-year, or 4-year limited warranty. To determine which warranty came with your hardware product(s), see your packing slip or invoice. The following sections describe the limited warranties and return policy for the U.S., the limited warranties and return policy for Canada and the manufacturer guarantee for Latin America and the Caribbean.

Limited Warranty for Dell-Branded Hardware Products (U.S. Only)

What is covered by this limited warranty?

This limited warranty covers defects in materials and workmanship in your—our end-user customer's—Dell-branded hardware products, including Dell-branded peripheral products.

What is not covered by this limited warranty?

This limited warranty does not cover:

- Software, including the operating system and software added to the Dell-branded hardware products through our factory-integration system, third-party software, or the reloading of software
- Non-Dell-branded and Solution Provider Direct products and accessories
- Problems that result from:
  - External causes such as accident, abuse, misuse, or problems with electrical power
  - Servicing not authorized by Dell
  - Usage that is not in accordance with product instructions
  - Failure to follow the product instructions or failure to perform preventive maintenance
  - Problems caused by using accessories, parts, or components not supplied by Dell
- Products with missing or altered Service Tags or serial numbers
- Products for which Dell has not received payment

THIS WARRANTY GIVES YOU SPECIFIC LEGAL RIGHTS, AND YOU MAY ALSO HAVE OTHER RIGHTS WHICH VARY FROM STATE TO STATE (OR JURISDICTION TO JURISDICTION). DELL'S RESPONSIBILITY FOR MALFUNCTIONS AND DEFECTS IN HARDWARE IS LIMITED TO REPAIR AND REPLACEMENT AS SET FORTH IN THIS WARRANTY STATEMENT. ALL EXPRESS AND IMPLIED WARRANTIES FOR THE PRODUCT, INCLUDING BUT NOT LIMITED TO ANY IMPLIED WARRANTIES AND CONDITIONS OF MERCHANTABILITY AND FITNESS FOR A PARTICULAR PURPOSE, ARE LIMITED IN TIME TO THE TERM OF THE LIMITED WARRANTY PERIOD REFLECTED ON YOUR PACKING SLIP OR INVOICE. NO WARRANTIES, WHETHER EXPRESS OR IMPLIED, WILL APPLY AFTER THE LIMITED WARRANTY PERIOD HAS EXPIRED. SOME STATES DO NOT ALLOW LIMITATIONS ON HOW LONG AN IMPLIED WARRANTY LASTS, SO THIS LIMITATION MAY NOT APPLY TO YOU.

WE DO NOT ACCEPT LIABILITY BEYOND THE REMEDIES PROVIDED FOR IN THIS LIMITED WARRANTY OR FOR CONSEQUENTIAL OR INCIDENTAL DAMAGES, INCLUDING, WITHOUT LIMITATION, ANY LIABILITY FOR THIRD-PARTY CLAIMS AGAINST YOU FOR DAMAGES, FOR PRODUCTS NOT BEING AVAILABLE FOR USE, OR FOR LOST DATA OR LOST SOFTWARE. OUR LIABILITY WILL BE NO MORE THAN THE AMOUNT YOU PAID FOR THE PRODUCT THAT IS THE SUBJECT OF A CLAIM. THIS IS THE MAXIMUM AMOUNT FOR WHICH WE ARE RESPONSIBLE.

SOME STATES DO NOT ALLOW THE EXCLUSION OR LIMITATION OF INCIDENTAL OR CONSEQUENTIAL DAMAGES, SO THE ABOVE LIMITATION OR EXCLUSION MAY NOT APPLY TO YOU.

How long does this limited warranty last?

This limited warranty lasts for the time period indicated on your packing slip or invoice, except for the following Dell-branded hardware:

- Portable computer batteries carry a 1-year limited warranty.
- Projector lamps carry a 90-day limited warranty.
- Memory carries a lifetime limited warranty.
- Monitors carry the longer of either a 3-year limited warranty or the remainder of the warranty for the Dell computer to which the monitor will be connected.
- Other add-on hardware carries the longer of either a 1-year limited warranty for new parts and a 90-day limited warranty for reconditioned parts or, for both new and reconditioned parts, the reminder of the warranty for the Dell computer on which such parts are installed.

The limited warranty on all Dell-branded products begins on the date of the packing slip or invoice. The warranty period is not extended if we repair or replace a warranted product or any parts. Dell may change the availability of limited warranties, at its discretion, but any changes will not be retroactive.

What do I do if I need warranty service?

Before the warranty expires, please call us at the relevant number listed in the following table. Please also have your Dell Service Tag or order number available.

Individual Home Consumers:	**U.S. Only**
Technical Support	1-800-624-9896
Customer Service	1-800-624-9897
Individual Home Consumers who purchased through an Employee Purchase Program:	
Technical Support and Customer Service	1-800-822-8965
Home and Small Business Commercial Customers:	
Technical Support and Customer Service	1-800-456-3355
Medium, Large, or Global Commercial Customers, Healthcare Customers, and Value-Added Resellers (VARs):	
Technical Support and Customer Service	1-800-822-8965
Government and Education Customers:	
Technical Support and Customer Service	1-800-234-1490
Dell-Branded Memory	1-888-363-5150

What will Dell do?

During the 90 days of the 90-day limited warranty and the first year of all other limited warranties: During the 90 days of the 90-day limited warranty and the first year of all other limited warranties, we will repair any Dell-branded hardware products returned to us that prove to be defective in materials or workmanship. If we are not able to repair the product, we will replace it with a comparable product that is new or refurbished.

When you contact us, we will issue a Return Material Authorization Number for you to include with your return. You must return the products to us in their original or equivalent packaging, prepay shipping charges, and insure the shipment or accept the risk if the product is lost or damaged in shipment. We will return the repaired or replacement products to you. We will pay to ship the repaired or replaced products to you if you use an address in the United States (excluding Puerto Rico and U.S. possessions and territories). Otherwise, we will ship the product to you freight collect.

If we determine that the product is not covered under this warranty, we will notify you and inform you of service alternatives that are available to you on a fee basis.

NOTE: Before you ship the product(s) to us, make sure to back up the data on the hard drive(s) and any other storage device(s) in the product(s). Remove any confidential, proprietary, or personal information and removable media such as floppy disks, CDs, or PC Cards. We are not responsible for any of your confidential, proprietary, or personal information; lost or corrupted data; or damaged or lost removable media.

During the remaining years: For the remaining period of the limited warranty, we will replace any defective part with new or refurbished parts, if we agree that it needs to be replaced. When you contact us, we will require a valid credit card number at the time you request a replacement part, but we will not charge you for the replacement part as long as you return the original part to us within 30 days after we ship the replacement part to you. If we do not receive the original part within 30 days, we will charge to your credit card the then-current standard price for that part.

We will pay to ship the part to you if you use an address in the United States (excluding Puerto Rico and U.S. possessions and territories). Otherwise, we will ship the part freight collect. We will also include a prepaid shipping container with each replacement part for your use in returning the replaced part to us.

NOTE: Before you replace parts, make sure to back up the data on the hard drive(s) and any other storage device(s) in the product(s). We are not responsible for lost or corrupted data.

What if I purchased a service contract?

If your service contract is with Dell, service will be provided to you under the terms of the service agreement. Please refer to that contract for details on how to obtain service.

If you purchased through us a service contract with one of our third-party service providers, please refer to that contract for details on how to obtain service.

How will you fix my product?

We use new and refurbished parts made by various manufacturers in performing warranty repairs and in building replacement parts and systems. Refurbished parts and systems are parts or systems that have been returned to Dell, some of which were never used by a customer. All parts and systems are inspected and tested for quality. Replacement parts and systems are covered for the remaining period of the limited warranty for the product you bought. Dell owns all parts removed from repaired products.

May I transfer the limited warranty?

Limited warranties on systems may be transferred if the current owner transfers ownership of the system and records the transfer with us. The limited warranty on Dell-branded memory may not be transferred. You may record your transfer by going to Dell's website:

- If you are an Individual Home Consumer, go to **www.dell.com/us/en/dhs/topics/sbtopic_015_ccare.htm**
- If you are a Home Office, Small, Medium, Large, or Global Commercial Customer, go to **www.dell.com/us/en/biz/topics/sbtopic_ccare_nav_015_ccare.htm**
- If you are a Government, Education, or Healthcare Customer, or an Individual Home Consumer who purchased through an Employee Purchase Program, go to **www.dell.com/us/en/pub/topics/sbtopic_015_ccare.htm**

If you do not have Internet access, call your customer care representative or call 1-800-624-9897.

"Total Satisfaction" Return Policy (U.S. Only)

We value our relationship with you and want to make sure that you're satisfied with your purchases. That's why we offer a "Total Satisfaction" return policy for most products that you, the end-user customer, purchase directly from Dell. Under this policy, you may return to Dell products that you purchased directly from Dell for a credit or a refund of the purchase price paid, less shipping and handling and applicable return fees as follows:

New Hardware Products and Accessories — Unless you have a separate agreement with Dell, all hardware, accessories, peripherals, parts, and unopened software still in its sealed package, excluding the products listed below, may be returned within twenty-one (21) days from the date on the packing slip or invoice. New PowerEdge™ , PowerConnect ™ and PowerVault™ products may be returned within thirty (30) days from the date on the packing slip or invoice except that new PowerEdge™ SC servers and n series products purchased from the Small and Medium Business Sales Division may only be returned within fourteen (14) days from the date on the packing slip or invoice. To return applications software or an operating system that has been installed by Dell, you must return the entire computer. A different return policy applies to nondefective products purchased through Dell's Software and Peripherals division by customers of our Small and Medium Business divisions. Those products may be returned within twenty-one (21) days from the date on the packing slip or invoice, but a fifteen percent (15%) return fee will be deducted from any refund or credit. The "Total Satisfaction" Return Policy and Software and Peripherals division return policy are not available for Dell | EMC storage products, EMC-branded products, Unisys-branded products, PowerVault™,160T tape libraries, enterprise software, non-Dell branded enterprise products, software and/or software licenses purchased under any type of volume purchase agreement or any non-Dell customized hardware and/or software product(s).

Reconditioned or Refurbished Dell-Branded Hardware Products and Parts — All reconditioned or refurbished PowerEdge™ , PowerConnect™ and PowerVault™ products may be returned within thirty (30) days from the date on the packing slip or invoice. All other reconditioned or refurbished Dell-branded hardware products and parts may be returned within fourteen (14) days of the date on the packing slip or invoice.

How to Return — To return products, e-mail or call Dell customer service to receive a Credit Return Authorization Number within the return policy period applicable to the product you want to return. You must obtain a Credit Return Authorization Number in order to return the product. See "Contacting Dell" or "Getting Help" in your customer documentation (or **www.dell.com/us/en/gen/contact.htm**) to find the appropriate contact information for obtaining customer assistance. You must ship the products to Dell within five (5) days of the date that Dell issues the Credit Return Authorization Number. You must also return the products to Dell in their original packaging, in as-new condition along with any media, documentation, and all other items that were included in the original shipment, prepay shipping charges, and insure the shipment or accept the risk of loss or damage during shipment.

Limited Warranty Terms for Dell-Branded Hardware Products (Canada Only)

What is covered by this limited warranty?

This limited warranty covers defects in materials and workmanship in your—our end-user customer's—Dell-branded hardware products, including Dell-branded peripheral products.

What is not covered by this limited warranty?

This limited warranty does not cover:

- Software, including the operating system and software added to the Dell-branded hardware products through our factory-integration system, or the reloading of the software
- Non-Dell branded and Solution Provider Direct products and accessories
- Problems that result from:
  - External causes such as accident, abuse, misuse, or problems with electrical power
  - Servicing not authorized by Dell
  - Usage that is not in accordance with product instructions
  - Failure to follow the product instructions or failure to perform preventive maintenance
  - Problems caused by using accessories, parts, or components not supplied by Dell
- Products with missing or altered Service Tags or serial numbers
- Products for which Dell has not received payment

THIS WARRANTY GIVES YOU SPECIFIC LEGAL RIGHTS, AND YOU MAY ALSO HAVE OTHER RIGHTS WHICH VARY FROM PROVINCE TO PROVINCE. DELL'S RESPONSIBILITY FOR MALFUNCTIONS AND DEFECTS IN PRODUCT IS LIMITED TO REPAIR AND REPLACEMENT AS SET FORTH IN THIS WARRANTY STATEMENT, FOR THE TERM OF THE WARRANTY PERIOD REFLECTED ON YOUR PACKING SLIP OR INVOICE. EXCEPT FOR THE EXPRESS WARRANTIES CONTAINED IN THIS WARRANTY STATEMENT, DELL DISCLAIMS ALL OTHER WARRANTIES AND CONDITIONS, EXPRESS OR IMPLIED, INCLUDING WITHOUT LIMITATION IMPLIED WARRANTIES AND CONDITIONS OF MERCHANTABILITY AND FITNESS FOR A PARTICULAR PURPOSE, STATUTORY OR OTHERWISE. SOME PROVINCES DO NOT ALLOW THE EXCLUSION OF CERTAIN IMPLIED WARRANTIES OR CONDITIONS, OR LIMITATIONS ON HOW LONG AN IMPLIED WARRANTY OR CONDITION LASTS. THEREFORE, THE FOREGOING EXCLUSIONS AND LIMITATIONS MAY NOT APPLY TO YOU.

WE DO NOT ACCEPT LIABILITY BEYOND THE REMEDIES PROVIDED FOR IN THIS WARRANTY STATEMENT OR FOR SPECIAL, INDIRECT, CONSEQUENTIAL, OR INCIDENTAL DAMAGES, INCLUDING, WITHOUT LIMITATION, ANY LIABILITY FOR THIRD-PARTY CLAIMS AGAINST YOU FOR DAMAGES, FOR PRODUCTS NOT BEING AVAILABLE FOR USE, OR FOR LOST DATA OR LOST SOFTWARE. OUR LIABILITY WILL BE NO MORE THAN THE AMOUNT YOU PAID FOR THE PRODUCT THAT IS THE SUBJECT OF A CLAIM. THIS IS THE MAXIMUM AMOUNT FOR WHICH WE ARE RESPONSIBLE.

SOME PROVINCES DO NOT ALLOW THE EXCLUSION OR LIMITATION OF SPECIAL, INDIRECT, INCIDENTAL, OR CONSEQUENTIAL DAMAGES, SO THE ABOVE LIMITATION OR EXCLUSION MAY NOT APPLY TO YOU.

How long does this limited warranty last?

This limited warranty lasts for the time period indicated on your packing slip or invoice, except that the limited warranty on Dell-branded batteries lasts only 1 year and the limited warranty on the lamps for Dell-branded projectors lasts only 90 days. The limited warranty begins on the date of the packing slip or invoice. The warranty period is not extended if we repair or replace a warranted product or any parts. Dell may change the terms and availability of limited warranties, at its discretion, but any changes will not be retroactive (that is, the warranty terms in place at the time of purchase will apply to your purchase).

What do I do if I need warranty service?

Before the warranty expires, please call us at the relevant number listed in the following table. Please also have your Dell Service Tag or order number available.

Individual Home Consumers; Home Office and Small Business Customers:	**Canada Only**
Technical Support and Customer Service	1-800-847-4096
Medium, Large, and Global Commercial Customers; Government, Education, and Healthcare Customers; and Value-Added Resellers (VARs):	
Technical Support	1-800-387-5757
Customer Service	1-800-326-9463
Government or Education Customers, or Individual Home Consumers who purchased through an Employee Purchase Program:	
Technical Support	1-800-387-5757
Customer Service	1-800-326-9463 (Extension 8221 for Individual Consumers)
Dell-Branded Memory	1-888-363-5150

What will Dell do?

During the 90 days of the 90-day limited warranty and the first year of all other limited warranties: During the 90 days of the 90-day limited warranty and the first year of all other limited warranties, we will repair any Dell-branded hardware products returned to us that prove to be defective in materials or workmanship. If we are not able to repair the product, we will replace it with a comparable product that is new or refurbished.

When you contact us, we will issue a Return Material Authorization Number for you to include with your return. You must return the products to us in their original or equivalent packaging, prepay shipping charges, and insure the shipment or accept the risk if the product is lost or damaged in shipment. We will return the repaired or replacement products to you. We will pay to ship the repaired or replaced products to you if you use an address in Canada. Otherwise, we will ship the product to you freight collect.

If we determine that the problem is not covered under this warranty, we will notify you and inform you of service alternatives that are available to you on a fee basis.

NOTE: Before you ship the product(s) to us, make sure to back up the data on the hard drive(s) and any other storage device(s) in the product(s). Remove any confidential, proprietary or personal information, removable media, such as floppy disks, CDs, or PC Cards. We are not responsible for any of your confidential, proprietary or personal information; lost or corrupted data; or damaged or lost removable media.

During the remaining years following the first year of all limited warranties: We will replace any defective part with new or refurbished parts, if we agree that it needs to be replaced. When you contact us, we will require a valid credit card number at the time you request a replacement part, but we will not charge you for the replacement part as long as you return the original part to us within 30 days after we ship the replacement part to you. If we do not receive the original part within 30 days, we will charge to your credit card the then-current standard price for that part.

We will pay to ship the part to you if you use an address in Canada. Otherwise, we will ship the part freight collect. We will also include a prepaid shipping container with each replacement part for your use in returning the replaced part to us.

NOTE: Before you replace parts, make sure to back up the data on the hard drive(s) and any other storage device(s) in the product(s). We are not responsible for lost or corrupted data.

What if I purchased a service contract?

If your service contract is with Dell, service will be provided to you under the terms of the service contract. Please refer to that contract for details on how to obtain service. Dell's service contracts can be found online at **www.dell.ca** or by calling Customer Care at 1-800-847-4096. If you purchased through us a service contract with one of our third-party service providers, please refer to that contract (mailed to you with your packing slip or invoice) for details on how to obtain service.

How will you fix my product?

We use new and refurbished parts made by various manufacturers in performing warranty repairs and in building replacement parts and systems. Refurbished parts and systems are parts or systems that have been returned to Dell, some of which were never used by a customer. All parts and systems are inspected and tested for quality. Replacement parts and systems are covered for the remaining period of the limited warranty for the product you bought. Dell owns all parts removed from repaired products.

May I transfer the limited warranty?

Limited warranties on systems may be transferred if the current owner transfers ownership of the system and records the transfer with us. The limited warranty on Dell-branded memory may not be transferred. You may record your transfer by going to Dell's website:

- For Canada-purchased computers (in-country transfers) and to transfer from one customer to another, go to **www.dell.ca/ca/en/gen/topics/segtopic_ccare_nav_013_ccare.htm**
- For out-of-country transfers (outside of the original country of purchase), go to **www.dell.com/us/en/biz/topics/sbtopic_ccare_nav_016_ccare.htm**

If you do not have Internet access, call Dell at 1-800-847-4096 (Home Consumer customers) or 1-800-326-9463 (Corporate Commercial or Government customers).

Dell Return Policy (U.S. Only)

Dell values our relationship with you and offers a return policy for most products that you purchase directly from Dell. Under this policy, you may return to Dell, within the applicable return policy period, products that you purchased directly from Dell for a credit or a refund of the purchase price paid, less shipping and handling and applicable restocking fees.

Hardware Products and Accessories: Unless you have a separate agreement with Dell or except as provided in the section below, all hardware, accessories, peripherals, parts and software that is unopened and still in its/their sealed package or, if delivered electronically, software you have not accepted by clicking the "I agree to these Terms and Conditions" button, may be returned within twenty-one (21) days from the date on the packing slip or invoice for a credit or a refund of the purchase price paid, less shipping and handling and applicable restocking fees.

Exceptions to Dell's 21-day return policy:

- PowerEdge™, PowerConnect™ and PowerVault™ products may be returned within thirty (30) days from the date on the packing slip or invoice, except that new PowerEdge™ SC servers and n series products purchased from the Small and Medium Business Sales Division may only be returned within fourteen (14) days from the date on the packing slip or invoice.
- Application software or an operating system that has been installed by Dell may not be returned unless you return the entire computer under the 21-day return policy, if applicable to your purchase (if not applicable to your purchase, you may not return application software or an operating system).
- Dell/EMC storage products, EMC-branded products, Unisys-branded products, PowerVault™ 160T tape libraries, enterprise software, non-Dell branded enterprise products, software and/or software licenses purchased under any type of volume purchase agreement or any non-Dell customized hardware and/or software product(s) may not be returned at any time.

Restocking Fees: Unless the product is defective or the return is a direct result of a Dell error, a restocking fee of 15% may be charged on hardware, accessories, peripherals, parts and unopened software still in its/their sealed package.

How to Return: To return products, you must contact Dell customer service (**www.dell.com/us/en/gen/contact.htm**) and receive a Credit Return Authorization Number within the return policy period applicable to the product you want to return. You must obtain a Credit Return Authorization Number in order to return the product. See "Contacting Dell" or "Getting Help" in your customer documentation or the above website to find the appropriate contact information for obtaining customer assistance.

You must ship the products to Dell within five (5) days of the date that Dell issues the Credit Return Authorization Number. You must:

- Ship back **all** products you are seeking to return to Dell. At Dell's discretion, credit for partial returns may be less than invoice or individual component prices due to bundled or promotional pricing and any unadvertised discounts or concessions.
- Return the products in their original packaging, in as-new condition along with any media, documentation, and all other items that were included in the original shipment.
- Ship the product(s) at your expense, and insure the shipment or accept the risk of loss or damage during shipment.

Upon receipt of the complete returned purchase, Dell will issue a credit or a refund of the purchase price paid, less shipping and handling and applicable restocking fees.

NOTE: Before you ship the product(s) to us, make sure to back up the data on the hard drive(s) and any other storage device(s) in the product(s). Remove any confidential, proprietary or personal information, removable media, such as floppy disks, CDs, or PC Cards. We are not responsible for any of your confidential, proprietary or personal information; lost or corrupted data; or damaged or lost removable media.

"Total Satisfaction" Return Policy (Canada Only)

If you are an end-user customer who bought new products directly from Dell, you may return them to Dell up to 30 days after you receive them for a refund or credit of the product purchase price. If you are an end-user customer who bought reconditioned or refurbished products from Dell, you may return them to Dell within 14 days after the date on the packing slip or invoice for a refund or credit of the product purchase price. In either case, the refund or credit will not include any shipping and handling charges shown on your packing slip or invoice and will be subject to a fifteen percent (15%) restocking fee, unless otherwise prohibited by law. If you are an organization that bought the products under a written agreement with Dell, the agreement may contain different terms for the return of products than specified by this policy.

To return products, you must call Dell Customer Service at 1-800-847-4096 to receive a Credit Return Authorization Number. To expedite the process of your refund or credit, Dell expects you to return the products to Dell in their original packaging within 5 days of the date that Dell issues the Credit Return Authorization Number. You must also prepay shipping charges and insure the shipment or accept the risk of loss or damage during shipment. You may return software for a refund or credit only if the sealed package containing the floppy disk(s) or CD(s) is unopened. Returned products must be in as-new condition, and all of the manuals, floppy disk(s), CD(s), power cables, and other items included with a product must be returned with it. For customers who want to return, for refund or credit only, either application or operating system software that has been installed by Dell, the whole system must be returned, along with any media and documentation that may have been included in the original shipment.

The "Total Satisfaction" Return Policy does not apply to Dell | EMC storage products. It also does not apply to products purchased through Dell's Software and Peripherals division. For those products, please instead refer to Dell's Software and Peripheral's then-current return policy (see the following section, "Dell Software and Peripherals (Canada Only)").

Dell Software and Peripherals (Canada Only)

Third-Party Software and Peripherals Products

Similar to other resellers of software and peripherals, Dell does not warrant third-party products. Third-party software and peripheral products are covered by the warranties provided by the original manufacturer or publisher only. Third-party manufacturer warranties vary from product to product. Consult your product documentation for specific warranty information. More information may also be available from the manufacturer or publisher.

While Dell offers a wide selection of software and peripheral products, we do not specifically test or guarantee that all of the products we offer work with any or all of the various models of Dell computers, nor do we test or guarantee all of the products we sell on the hundreds of different brands of computers available today. If you have questions about compatibility, we recommend and encourage you to contact the third-party software and peripheral product manufacturer or publisher directly.

Dell-Branded Peripheral Products

Dell does provide a limited warranty for new Dell-branded peripheral products (products for which Dell is listed as the manufacturer) such as monitors, batteries, memory, docking stations, and projectors. To determine which limited warranty applies to the product you purchased, see the Dell packing slip or invoice and/or the product documentation that accompanied your product. Descriptions of Dell's limited warranties are described in preceding sections.

Return Policy

If you are an end-user customer who bought Dell Software and Peripherals products directly from a Dell company, you may return Dell Software and Peripherals products that are in as-new condition to Dell up to 30 days from the date on the packing slip or invoice for a refund of the product purchase price if already paid. This refund will not include any shipping and handling charges shown on your packing slip or invoice; you are responsible for those.

To return products, you must call Dell Customer Service at 1-800-387-5759 to receive a Credit Return Authorization Number. You must ship the Dell Software and Peripherals products back to Dell in their original manufacturer's packaging (which must be in as-new condition), prepay shipping charges, and insure the shipment or accept the risk of loss or damage during shipment.

To qualify for refund or replacement, returned products must be in as-new condition, software products must be unopened, and all of the manuals, floppy disk(s), CD(s), power cables, and other items included with a product must be returned with it.

Limited Warranty for Dell-Branded Tape Media (U.S. and Canada Only)

Dell warrants to you, the end-user customer, that this product will be free from defects in material and workmanship for one year from the invoice date, if properly used and maintained. If this product proves defective in either material or workmanship, it will be replaced without charge if returned to Dell. You must first call our toll-free number to get your return authorization. In the U.S., call 1-800-822-8965. In Canada, call 1-800-387-5757. If we are not able to replace the product because it has been discontinued or is not available, we will replace it with a comparable product. This warranty does not apply to failure of the product resulting from misuse, abuse, accident, neglect or mishandling, improperly adjusted or maintained drives, incorrect environments or wear from ordinary use.

THIS WARRANTY GIVES YOU SPECIFIC LEGAL RIGHTS, AND YOU MAY ALSO HAVE OTHER RIGHTS WHICH VARY FROM STATE TO STATE (OR JURISDICTION TO JURISDICTION). DELL'S RESPONSIBILITY FOR MALFUNCTIONS AND DEFECTS IN HARDWARE IS LIMITED TO REPLACEMENT AS SET FORTH IN THIS WARRANTY STATEMENT. FOR CANADIAN CUSTOMERS, EXCEPT FOR THE EXPRESS WARRANTIES CONTAINED IN THIS WARRANTY STATEMENT, DELL DISCLAIMS ALL OTHER WARRANTIES AND CONDITIONS, EXPRESS OR IMPLIED, STATUTORY OR OTHERWISE, FOR THE PRODUCT. FOR U.S. CUSTOMERS, ALL EXPRESS AND IMPLIED WARRANTIES FOR THE PRODUCT, INCLUDING BUT NOT LIMITED TO ANY IMPLIED WARRANTIES AND CONDITIONS OF MERCHANTABILITY AND FITNESS FOR A PARTICULAR PURPOSE, ARE LIMITED IN TIME TO THE TERM OF THIS LIMITED WARRANTY. NO WARRANTIES, WHETHER EXPRESS OR IMPLIED, WILL APPLY AFTER THE LIMITED WARRANTY PERIOD HAS EXPIRED. SOME STATES OR JURISDICTIONS DO NOT ALLOW THE EXCLUSION OF CERTAIN IMPLIED WARRANTIES OR CONDITIONS, OR LIMITATIONS ON HOW LONG AN IMPLIED WARRANTY OR CONDITION LASTS, SO THIS LIMITATION MAY NOT APPLY TO YOU. THIS WARRANTY COVERAGE TERMINATES IF YOU SELL OR OTHERWISE TRANSFER THIS PRODUCT TO ANOTHER PARTY.

DELL DOES NOT ACCEPT LIABILITY BEYOND THE REMEDIES PROVIDED FOR IN THIS LIMITED WARRANTY OR FOR SPECIAL, INDIRECT, CONSEQUENTIAL OR INCIDENTAL DAMAGES, INCLUDING, WITHOUT LIMITATION, ANY LIABILITY FOR THIRD-PARTY CLAIMS AGAINST YOU FOR DAMAGES, FOR PRODUCTS NOT BEING AVAILABLE FOR USE, OR FOR LOST DATA OR LOST SOFTWARE. DELL'S LIABILITY WILL BE NO MORE THAN THE AMOUNT YOU PAID FOR THE PRODUCT THAT IS THE SUBJECT OF A CLAIM. THIS IS THE MAXIMUM AMOUNT FOR WHICH DELL IS RESPONSIBLE.

SOME STATES OR JURISDICTIONS DO NOT ALLOW THE EXCLUSION OR LIMITATION OF SPECIAL, INDIRECT, INCIDENTAL OR CONSEQUENTIAL DAMAGES, SO THE ABOVE LIMITATION OR EXCLUSION MAY NOT APPLY TO YOU.

1-Year End-User Manufacturer Guarantee (Latin America and the Caribbean Only)

Guarantee

Dell Computer Corporation ("Dell") warrants to the end user in accordance with the following provisions that its branded hardware products, purchased by the end user from a Dell company or an authorized Dell distributor in Latin America or the Caribbean, will be free from defects in materials, workmanship, and design affecting normal use, for a period of 1 year from the original purchase date. Products for which proper claims are made will, at Dell’s option, be repaired or replaced at Dell’s expense. Dell owns all parts removed from repaired products. Dell uses new and reconditioned parts made by various manufacturers in performing repairs and building replacement products.

Exclusmions

This Guarantee does not apply to defects resulting from: improper or inadequate installation, use, or maintenance; actions or modifications by unauthorized third parties or the end user; accidental or willful damage; or normal wear and tear.

Making a Claim

Claims must be made in Latin America or the Caribbean by contacting the Dell point of sale within the guarantee period. The end user must always supply proof of purchase, indicating name and address of the seller, date of purchase, model and serial number, name and address of the customer, and details of symptoms and configuration at the time of malfunction, including peripherals and software used. Otherwise, Dell may refuse the guarantee claim. Upon diagnosis of a warranted defect, Dell will make arrangements and pay for ground freight and insurance to and from Dell's repair/replacement center. The end user must ensure that the defective product is available for collection properly packed in original or equally protective packaging together with the details listed above and the return number provided to the end user by Dell.

Limitation and Statutory Rights

Dell makes no other warranty, guarantee or like statement other than as explicitly stated above, and this Guarantee is given in place of all other guarantees whatsoever, to the fullest extent permitted by law. In the absence of applicable legislation, this Guarantee will be the end user's sole and exclusive remedy against Dell or any of its affiliates, and neither Dell nor any of its affiliates shall be liable for loss of profit or contracts, or any other indirect or consequential loss arising from negligence, breach of contract, or howsoever.

This Guarantee does not impair or affect mandatory statutory rights of the end user against and/or any rights resulting from other contracts concluded by the end user with Dell and/or any other seller.

Dell World Trade LP
One Dell Way, Round Rock, TX 78682, USA

Dell Computadores do Brasil Ltda (CNPJ No. 72.381.189/0001-10)
Avenida Industrial Belgraf, 400
92990-000 - Eldorado do Sul – RS - Brasil

Dell Computer de Chile Ltda
Coyancura 2283, Piso 3- Of.302,
Providencia, Santiago - Chile

Dell Computer de Colombia Corporation
Carrera 7 #115-33 Oficina 603
Bogota, Colombia

Dell Computer de Mexico SA de CV
Paseo de la Reforma 2620 - 11° Piso
Col. Lomas Altas
11950 México, D.F.

BARNE- OG FAMILIEDEPARTEMENTET

Skjema A (bokmål) side 1 av 2.
Dette skema er alene anvendeligt for norske konsumenter

Angreskjema For Norske Forbrukere

Dette skjemaet er obligatorisk i følge forskrift om angreskjema av 27. februar 2001 fastsatt av Barne- og familiedepartementet med hjemmel i lov 21.12.2000 nr. 105 om opplysningsplikt og angrerett mv. ved fjernsalg og salg utenfor fast utsalgssted (angrerettloven) § 10. Skal brukes ved fjernsalg og salg utenfor fast utsalgssted av varer.

Du Har 14 Dagers Ubetinget Angrerett

Etter angrerettloven kan forbrukeren gå fra avtalen uten å oppgi noen grunn innen 14 dager etter at hele varen og de opplysninger som kreves med hjemmel i angrerettloven kapittel 3 er mottatt på foreskreven måte (se side 2 av dette skjemaet). Fristen løper uansett ut senest 3 måneder etter at varen er mottatt, eller 1 år dersom opplysninger om angrerett ikke er gitt.

Melding om bruk av angreretten må gis til selgeren innen fristen, og kan gis på hvilken som helst måte. Du kan bruke dette skjemaet som skal være utfylt av selgeren som spesifisert nedenfor. Fristen anses overholdt dersom meldingen er avsendt innen fristens utløp, og du bør sørge for at dette kan dokumenteres.

Skal være utfylt av selgeren:

Selgerens
navn **Dell A/S**

Selgerens
adresse **Amager Strandvej 60-64, 2300 Kjøpenhavn, Danmark**

Telefonnr. **23 16 23 57** E-postadresse **sales_internet_no@dell.com**

Kontrakt/ordre/bestilling nr. **Indsæt fra ordrebekreftelse**

om vare(r) **indsæt fra ordrebekreftelse** ❑ Ordrebekreftelse er vedlagt dette skjemaet.

Avtalen ble inngått **Indsæt**_____ (dato). Skjemaet er levert/sendt **ved levering** (dato).

Fylles ut av forbrukeren:
OBS! Skjemaet skal ikke sendes til Barne- og familiedepartementet.

Skjemaet er mottatt _____ (dato). *Jeg benytter meg av angreretten.*

Navn _____

Adresse _____

Telefonnr. _____ E-post adresse _____

Dato _____ Underskrift _____

Skjema A (bokmål) side 2 av 2.

Angrefristens Utgangspunkt

Opplysningene i henhold til angrerettloven kapittel 3 er mottatt på foreskreven måte når kravene i § 9 jf. § 7 er oppfylt og dette skjemaet er mottatt ferdig utfylt med de opplysningene selgeren skal fylle ut. Se utdrag fra §§ 9 og 7 nedenfor.

§ 9. Opplysningsplikt ved avtaleinngåelse

I forbindelse med inngåelse av en avtale skal forbrukeren motta følgende opplysninger lesbart og lagret på papir eller annet varig medium som forbrukeren råder over:

a) opplysningene som nevnt i § 7 første ledd bokstav a-f

b) vilkårene og framgangsmåten for, samt virkningene av å benytte angreretten

c) opplysninger om eventuell ettersalgsservice og gjeldende garantivilkår

d) vilkår for oppsigelse av avtalen dersom den er tidsubegrenset eller av mer enn ett års varighet

e) bekreftelse av bestillingen.

Ved kjøp av varer skal forbrukeren motta opplysningene senest ved levering. Ved avtaler om varer som skal leveres til en annen enn kjøperen, kan det avtales at opplysningene skal gis først etter levering av varen. Opplysningene etter bokstav b-eskal uansett gis etter avtaleinngåelsen, selv om de er gitt på denne måten tidligere.

§ 7. Opplysningsplikt før avtaleinngåelsen

Før det blir inngått en avtale skal forbrukeren motta opplysninger som forbrukeren har grunn til å regne med å få, herunder opplysninger som forbrukeren har krav på etter annen lovgivning.

Forbrukeren skal i alle fall ha opplysninger om:

a) varens eller tjenestens viktigste egenskaper

b) de totale kostnadene forbrukeren skal betale, inklusive alle avgifter og leveringskostnader, og spesifikasjon av de enkelte elementene i totalprisen

c) om forbrukeren har rett til å gå fra avtalen (angrerett) eller ikke

d) alle vesentlige avtalevilkår, herunder om betaling, levering eller annen oppfyllelse av avtalen samt om avtalens varighet når avtalen gjelder løpende ytelser

e) selgerens eller tjenesteyterens navn og adresse

f) tidsrommet tilbudet eller prisen er gyldig i

Oppgjør Og Returkostnader Ved Bruk Av Angreretten

Hvis du benytter deg av angreretten skal du ha tilbake det du har betalt (alle kostnader som faktisk er belastet kunden, herunder porto, ekspedisjonsgebyr og postoppkravsgebyr), og selgeren skal ha tilbake varen.

Eventuelle kostnader ved retur av varer skal bæres av selgeren dersom avtalen er inngått ved telefonsalg eller salg utenfor fast utsalgssted (f.eks. dørsalg, gatesalg, messesalg og "homeparties"). Dersom avtalen er inngått ved annet fjernsalg enn telefonsalg (f.eks. postordresalg, internettsalg og tv-shopping) må du bære returkostnadene selv, med mindre selgeren har misligholdt avtalen eller selgeren i henhold til avtalen har levert en erstatningsvare, fordi den bestilte varen ikke var tilgjengelig.

Andre Opplysninger

Du mister ikke angreretten ved å åpne en vareforsendelse, så lenge varen kan leveres tilbake i vesentlig samme stand og mengde. Angrerettloven griper ikke inn i rettigheter du har etter bl.a. kjøpsloven hvis det skulle oppstå mangler eller forsinkelser. Dersom du beholder varen, kan du på visse vilkår kreve prisavslag, omlevering (ny vare), erstatning eller heve kjøpet (få pengene tilbake). Du må da reklamere innen rimelig tid etter at du oppdaget feilen/mangelen. Har du spørsmål om angrerettloven, kjøpsloven eller andre regler som angår deg som forbruker, kan du kontakte Forbrukerrådet på tlf. 815 58 200. Internettadresse: http://www.forbrukerportalen.no

Skjemaet kan kopieres.

Dell™ Printer Consumables Limited Warranties

The following sections describe the limited warranty for printer consumables (ink cartridges, toner cartridges, photo print packs, and photo paper) for Dell-branded printers, for the U.S., Canada, and Latin America. Refer to the appropriate limited warranty accordingly.

Consumables Limited Warranty (U.S. and Canada Only)

Dell Inc. warrants to the original purchaser of genuine Dell-branded toner cartridges that they will be free from defects in material and workmanship for the life of the cartridge and that for genuine Dell-branded ink cartridges, photo print packs and photo paper, they will be free from defects in material and workmanship for two years beginning on the date of invoice. If this product proves defective in either material or workmanship, it will be replaced without charge during the limited warranty period if returned to Dell. You must first call our toll-free number to get your return authorization. In the U.S., call 1-800-822-8965; in Canada, call 1-800-387-5757. If we are not able to replace the product because it has been discontinued or is not available, we will either replace it with a comparable product or reimburse you for the cartridge purchase cost, at Dell's sole option. This limited warranty does not apply to ink or toner cartridges that have been refilled or improperly stored or due to problems resulting from misuse, abuse, accident, neglect, mishandling, incorrect environments, or wear from ordinary use.

THIS WARRANTY GIVES YOU SPECIFIC LEGAL RIGHTS, AND YOU MAY ALSO HAVE OTHER RIGHTS WHICH VARY FROM STATE TO STATE (OR JURISDICTION TO JURISDICTION). DELL'S RESPONSIBILITY FOR MALFUNCTIONS AND DEFECTS IN HARDWARE IS LIMITED TO REPLACEMENT AS SET FORTH IN THIS WARRANTY STATEMENT. FOR CANADIAN CUSTOMERS, EXCEPT FOR THE EXPRESS WARRANTIES CONTAINED IN THIS WARRANTY STATEMENT, DELL DISCLAIMS ALL OTHER WARRANTIES AND CONDITIONS, EXPRESS OR IMPLIED, STATUTORY OR OTHERWISE, FOR THE PRODUCT. FOR U.S. CUSTOMERS, ALL EXPRESS AND IMPLIED WARRANTIES FOR THE PRODUCT, INCLUDING BUT NOT LIMITED TO ANY IMPLIED WARRANTIES AND CONDITIONS OF MERCHANTABILITY AND FITNESS FOR A PARTICULAR PURPOSE ARE LIMITED IN TIME TO THE TERM OF THIS LIMITED WARRANTY. NO WARRANTIES, WHETHER EXPRESS OR IMPLIED, WILL APPLY AFTER THE LIMITED WARRANTY PERIOD HAS EXPIRED. SOME STATES OR JURISDICTIONS DO NOT ALLOW THE EXCLUSION OF CERTAIN IMPLIED WARRANTIES OR CONDITIONS, OR LIMITATIONS ON HOW LONG AN IMPLIED WARRANTY OR CONDITION LASTS, SO THIS LIMITATION MAY NOT APPLY TO YOU. THIS WARRANTY COVERAGE TERMINATES IF YOU SELL OR OTHERWISE TRANSFER THIS PRODUCT TO ANOTHER PARTY.

DELL DOES NOT ACCEPT LIABILITY BEYOND THE REMEDIES PROVIDED FOR IN THIS LIMITED WARRANTY OR FOR SPECIAL, INDIRECT, CONSEQUENTIAL OR INCIDENTAL DAMAGES, INCLUDING, WITHOUT LIMITATION, ANY LIABILITY FOR THIRD-PARTY CLAIMS AGAINST YOU FOR DAMAGES, FOR PRODUCTS NOT BEING AVAILABLE FOR USE, OR FOR LOST DATA OR LOST SOFTWARE. DELL'S LIABILITY WILL BE NO MORE THAN THE AMOUNT YOU PAID FOR THE PRODUCT THAT IS THE SUBJECT OF A CLAIM. THIS IS THE MAXIMUM AMOUNT FOR WHICH DELL IS RESPONSIBLE.

SOME STATES OR JURISDICTIONS DO NOT ALLOW THE EXCLUSION OR LIMITATION OF SPECIAL, INDIRECT, INCIDENTAL OR CONSEQUENTIAL DAMAGES, SO THE ABOVE LIMITATION OR EXCLUSION MAY NOT APPLY TO YOU.

Consumables Limited Warranty (Latin America Only)

Dell Inc. warrants to the original purchaser of genuine Dell-branded toner cartridges that the cartridges will be free from defects resulting from material or manufacturing process for the life of the cartridge. For the original purchaser of genuine Dell-branded ink cartridges, photo print packs and photo paper, Dell warrants that the consumables will be free from defects resulting from material or manufacturing process for one year beginning from the date of delivery.

If this product presents defects resulting from either material or manufacturing process, it will be replaced without charge during the limited warranty period if returned to Dell.

In order to obtain the necessary information to enable the replacement, call the appropriate toll-free number. In Mexico, call 001-877-533-6230; in Puerto Rico, call 1-877-839-5123. In cases in which either the production of the cartridge has been discontinued or the cartridge is not available, Dell reserves the right, at its sole discretion, to choose between replacing it by a similar product or reimbursing you for the purchase cost.

This limited warranty does not apply to ink or toner cartridges that have been refilled or to defects resulting from misuse, abuse, accident, negligence, mishandling, improper storage or exposure to inappropriate environments.

Dell's liability for the malfunction or defect of hardware after the period of the legal warranty (and specifically the period of the legal warranty of defective products stated in the consumer protections rules), is limited to either the substitution of the product or the reimbursement as stated above. This warranty coverage terminates if you sell or otherwise transfer this product to a third party.

Dell does not accept any additional liability for patrimonial, emotional or any other kind of damage caused to the consumer and/or to a third party, which exceeds the established liability either in this limited warranty or in legal rules that may apply.

Dell™ Software License Agreement

This is a legal agreement between you, the user, and Dell Products, L.P ("Dell"). This agreement covers all software that is distributed with the Dell product, for which there is no separate license agreement between you and the manufacturer or owner of the software (collectively the "Software"). By opening or breaking the seal on the Software packet(s), installing or downloading the Software, or using the Software that has been preloaded or is embedded in your computer, you agree to be bound by the terms of this agreement. If you do not agree to these terms, promptly return all Software items (disks, written materials, and packaging) and delete any preloaded or embedded Software.

You may use one copy of the Software on only one computer at a time. If you have multiple licenses for the Software, you may use as many copies at any time as you have licenses. "Use" means loading the Software in temporary memory or permanent storage on the computer. Installation on a network server solely for distribution to other computers is not "use" if (but only if) you have a separate license for each computer to which the Software is distributed. You must ensure that the number of persons using the Software installed on a network server does not exceed the number of licenses that you have. If the number of users of Software installed on a network server will exceed the number of licenses, you must purchase additional licenses until the number of licenses equals the number of users before allowing additional users to use the Software. If you are a commercial customer of Dell or a Dell affiliate, you hereby grant Dell, or an agent selected by Dell, the right to perform an audit of your use of the Software during normal business hours, you agree to cooperate with Dell in such audit, and you agree to provide Dell with all records reasonably related to your use of the Software. The audit will be limited to verification of your compliance with the terms of this agreement.

The Software is protected by United States copyright laws and international treaties. You may make one copy of the Software solely for backup or archival purposes or transfer it to a single hard disk provided you keep the original solely for backup or archival purposes. You may not rent or lease the Software or copy the written materials accompanying the Software, but you may transfer the Software and all accompanying materials on a permanent basis if you retain no copies and the recipient agrees to the terms hereof. Any transfer must include the most recent update and all prior versions. You may not reverse engineer, decompile or disassemble the Software. If the package accompanying your computer contains compact discs, 3.5" and/or 5.25" disks, you may use only the disks appropriate for your computer. You may not use the disks on another computer or network, or loan, rent, lease, or transfer them to another user except as permitted by this agreement.

Limited Warranty

Dell warrants that the Software disks will be free from defects in materials and workmanship under normal use for ninety (90) days from the date you receive them. This warranty is limited to you and is not transferable. Any implied warranties are limited to ninety (90) days from the date you receive the Software. Some jurisdictions do not allow limits on the duration of an implied warranty, so this limitation may not apply to you. The entire liability of Dell and its suppliers, and your exclusive remedy, shall be (a) return of the price paid for the Software or (b) replacement of any disk not meeting this warranty that is sent with a return authorization number to Dell, at your cost and risk. This limited warranty is void if any disk damage has resulted from accident, abuse, misapplication, or service or modification by someone other than Dell. Any replacement disk is warranted for the remaining original warranty period or thirty (30) days, whichever is longer.

Dell does NOT warrant that the functions of the Software will meet your requirements or that operation of the Software will be uninterrupted or error free. You assume responsibility for selecting the Software to achieve your intended results and for the use and results obtained from the Software.

DELL, ON BEHALF OF ITSELF AND ITS SUPPLIERS, DISCLAIMS ALL OTHER WARRANTIES, EXPRESS OR IMPLIED, INCLUDING, BUT NOT LIMITED TO, IMPLIED WARRANTIES OF MERCHANTABILITY AND FITNESS FOR A PARTICULAR PURPOSE, FOR THE SOFTWARE AND ALL ACCOMPANYING WRITTEN MATERIALS. This limited warranty gives you specific legal rights; you may have others, which vary from jurisdiction to jurisdiction.

IN NO EVENT SHALL DELL OR ITS SUPPLIERS BE LIABLE FOR ANY DAMAGES WHATSOEVER (INCLUDING, WITHOUT LIMITATION, DAMAGES FOR LOSS OF BUSINESS PROFITS, BUSINESS INTERRUPTION, LOSS OF BUSINESS INFORMATION, OR OTHER PECUNIARY LOSS) ARISING OUT OF USE OR INABILITY TO USE THE SOFTWARE, EVEN IF ADVISED OF THE POSSIBILITY OF SUCH DAMAGES. Because some jurisdictions do not allow an exclusion or limitation of liability for consequential or incidental damages, the above limitation may not apply to you.

U.S. Government Restricted Rights

The software and documentation are "commercial items" as that term is defined at 48 C.F.R. 2.101, consisting of "commercial computer software" and "commercial computer software documentation" as such terms are used in 48 C.F.R. 12.212. Consistent with 48 C.F.R. 12.212 and 48 C.F.R. 227.7202-1 through 227.7202-4, all U.S. Government end users acquire the software and documentation with only those rights set forth herein. Contractor/manufacturer is Dell Products, L.P., One Dell Way, Round Rock, Texas 78682.

General

This license is effective until terminated. It will terminate upon the conditions set forth above or if you fail to comply with any of its terms. Upon termination, you agree that the Software and accompanying materials, and all copies thereof, will be destroyed. This agreement is governed by the laws of the State of Texas. Each provision of this agreement is severable. If a provision is found to be unenforceable, this finding does not affect the enforceability of the remaining provisions, terms, or conditions of this agreement. This agreement is binding on successors and assigns. Dell agrees and you agree to waive, to the maximum extent permitted by law, any right to a jury trial with respect to the Software or this agreement. Because this waiver may not be effective in some jurisdictions, this waiver may not apply to you. You acknowledge that you have read this agreement, that you understand it, that you agree to be bound by its terms, and that this is the complete and exclusive statement of the agreement between you and Dell regarding the Software.

Regulatory Notices

Electromagnetic Interference (EMI) is any signal or emission, radiated in free space or conducted along power or signal leads, that endangers the functioning of a radio navigation or other safety service or seriously degrades, obstructs, or repeatedly interrupts a licensed radio communications service. Radio communications services include but are not limited to AM/FM commercial broadcast, television, cellular services, radar, air-traffic control, pager, and Personal Communication Services (PCS). These licensed services, along with unintentional radiators such as digital devices, including computers, contribute to the electromagnetic environment.

Electromagnetic Compatibility (EMC) is the ability of items of electronic equipment to function properly together in the electronic environment. While this computer has been designed and determined to be compliant with regulatory agency limits for EMI, there is no guarantee that interference will not occur in a particular installation. If this equipment does cause interference with radio communications services, which can be determined by turning the equipment off and on, you are encouraged to try to correct the interference by one or more of the following measures:

- Reorient the receiving antenna.
- Relocate the computer with respect to the receiver.
- Move the computer away from the receiver.
- Plug the computer into a different outlet so that the computer and the receiver are on different branch circuits.

If necessary, consult a Dell Technical Support representative or an experienced radio/television technician for additional suggestions.

Dell™ computers are designed, tested, and classified for their intended electromagnetic environment. These electromagnetic environment classifications generally refer to the following harmonized definitions:

- Class A is typically for business or industrial environments.
- Class B is typically for residential environments.

Information Technology Equipment (ITE), including devices, expansion cards, printers, input/output (I/O) devices, monitors, and so on, that are integrated into or connected to the computer should match the electromagnetic environment classification of the computer.

A Notice About Shielded Signal Cables: Use only shielded cables for connecting devices to any Dell device to reduce the possibility of interference with radio communications services. Using shielded cables ensures that you maintain the appropriate EMC classification for the intended environment. For parallel printers, a cable is available from Dell. If you prefer, you can order a cable from Dell on the World Wide Web at accessories.us.dell.com/sna/category.asp?category_id=4117.

Most Dell computers are classified for Class B environments. However, the inclusion of certain options can change the rating of some configurations to Class A. To determine the electromagnetic classification for your computer or device, see the following sections specific for each regulatory agency. Each section provides country-specific EMC/EMI or product safety information.

FCC Notices (U.S. Only)

Most Dell computers are classified by the Federal Communications Commission (FCC) as Class B digital devices. To determine which classification applies to your computer, examine all FCC registration labels located on the bottom, side, or back panel of your computer, on card-mounting brackets, and on the cards themselves. If any one of the labels carries a Class A rating, your entire computer is considered to be a Class A digital device. If *all* labels carry an FCC Class B rating as distinguished by either an FCC ID number or the FCC logo, (FC), your computer is considered to be a Class B digital device.

Once you have determined your computer's FCC classification, read the appropriate FCC notice. Note that FCC regulations provide that changes or modifications not expressly approved by Dell could void your authority to operate this equipment.

This device complies with Part 15 of the FCC Rules. Operation is subject to the following two conditions:

- This device may not cause harmful interference.
- This device must accept any interference received, including interference that may cause undesired operation.

Class A

This equipment has been tested and found to comply with the limits for a Class A digital device pursuant to Part 15 of the FCC Rules. These limits are designed to provide reasonable protection against harmful interference when the equipment is operated in a commercial environment. This equipment generates, uses, and can radiate radio frequency energy and, if not installed and used in accordance with the manufacturer's instruction manual, may cause harmful interference with radio communications. Operation of this equipment in a residential area is likely to cause harmful interference, in which case you will be required to correct the interference at your own expense.

Class B

This equipment has been tested and found to comply with the limits for a Class B digital device pursuant to Part 15 of the FCC Rules. These limits are designed to provide reasonable protection against harmful interference in a residential installation. This equipment generates, uses, and can radiate radio frequency energy and, if not installed and used in accordance with the manufacturer's instruction manual, may cause interference with radio communications. However, there is no guarantee that interference will not occur in a particular installation. If this equipment does cause harmful interference to radio or television reception, which can be determined by turning the equipment off and on, you are encouraged to try to correct the interference by one or more of the following measures:

- Reorient or relocate the receiving antenna.
- Increase the separation between the equipment and the receiver.
- Connect the equipment into an outlet on a circuit different from that to which the receiver is connected.
- Consult the dealer or an experienced radio/television technician for help.

FCC Identification Information

The following information is provided on the device or devices covered in this document in compliance with FCC regulations:

- Model number: Laser Multi-Function Printer 1815n
- Company name:

  Dell Inc.
  One Dell Way
  Round Rock, Texas 78682 USA
  512-338-4400

Modem Regulatory Information

This equipment complies with Part 68 of the FCC Rules. On the bottom of your printer is a label that contains, among other information, the FCC registration number and ringer equivalence number (REN) for your equipment. If requested, you must provide this information to the telephone company.

The REN is used to determine the quantity of devices that may be connected to the telephone line. Excessive RENs on the telephone line may result in the devices not ringing in response to an incoming call. In most areas, the sum of all the RENs on your telephone line should be less than five to ensure proper service from the telephone company. To be certain of the number of devices that you may connect to a line, as determined by the total RENs, contact your local telephone company.

The registration jack Universal Service Order Code (USOC) used by this equipment is RJ-11C. An FCC compliant telephone cord and modular plug is provided with this equipment. This equipment is designed to be connected to the telephone network or premises wiring using a compatible modular jack that is Part 68 compliant.

This equipment cannot be used on public coin-phone service provided by the telephone company. Connection to party line service is subject to state tariffs.

There are no user serviceable parts on the modem contained in your printer.

If your telephone equipment causes harm to the telephone network, the telephone company will notify you in advance that service may be temporarily discontinued. If advance notice is not practical, the telephone company will notify you as soon as possible. Also, you will be advised of your right to file a complaint with the FCC if you believe it is necessary.

The telephone company may make changes in its facilities, equipment, operations, or procedures that could affect the operation of this equipment. If this happens, the telephone company will provide advance notice in order for you to make necessary modifications to maintain uninterrupted service.

If you experience trouble with this telephone equipment, see the section titled "Contacting Dell" to find the appropriate telephone number for obtaining customer assistance. If the equipment is causing harm to the telephone network, the telephone company may request that you disconnect the equipment until the problem is resolved.

Fax Branding

The Telephone Consumer Protection Act of 1991 makes it unlawful for any person to use a computer or other electronic device, including fax machines, to send any message unless such message clearly contains in a margin at the top or bottom of each transmitted page or on the first page of the transmission, the date and time it is sent, identification of the business, other entity, or individual sending the message, and the telephone number of the sending machine or such business, other entity, or individual. The telephone number provided may not be a 900 number or any other number for which charges exceed local or long-distance transmission charges.

IC Notice (Canada Only)

Most Dell devices (and other Dell digital apparatus) are classified by the Industry Canada (IC) Interference-Causing Equipment Standard #3 (ICES-003) as Class B digital devices. To determine which classification (Class A or B) applies to your device (or other Dell digital apparatus), examine all registration labels located on the bottom, side, or the back panel of your device (or other digital apparatus). A statement in the form of "IC Class A ICES-003" or "IC Class B ICES-003" will be located on one of these labels. Note that Industry Canada regulations provide that changes or modifications not expressly approved by Dell could void your authority to operate this equipment.

This Class B (or Class A, if so indicated on the registration label) digital apparatus meets the requirements of the Canadian Interference-Causing Equipment Regulations.

Cet appareil numérique de la Classe B (ou Classe A, si ainsi indiqué sur l'étiquette d'enregistration) respecte toutes les exigences du Reglement sur le Materiel Brouilleur du Canada.

Modem Regulatory Information

The IC label identifies certified equipment. This certification means that the equipment meets telecommunications network protective, operational, and safety requirements as prescribed in the appropriate Terminal Equipment Technical Requirements document(s). The IC label does not guarantee that the equipment will operate to the user's satisfaction.

Before installing this equipment, users should ensure that it is permissible to be connected to the facilities of the local telecommunications company. The equipment must also be installed using an acceptable method of connection. The customer should be aware that compliance with the above conditions may not prevent degradation of service in some situations.

Repairs to certified equipment should be coordinated by a representative designated by the supplier. Any repairs or alteration made by a user to this equipment, or equipment malfunctions, may give the telephone communications company cause to request the user to disconnect the equipment.

Users should ensure for their own protection, that the electrical ground connections of the power utility, telephone lines, and internal metallic water-pipe system, if present, are connected together. This precaution may be particularly important in rural areas.

NOTICE: Users should not attempt to make such connections themselves. Contact the appropriate electric inspection authority, or electrician, as appropriate.

NOTE: The REN assigned to each terminal device provides an indication of the maximum number of terminals allowed to be connected to a telephone interface. The termination on an interface may consist of any combination of devices subject only to the requirement that the sum of the RENs of all the devices does not exceed the number five.

The REN for the internal modem as stated on the IC regulatory label located on the bottom of the device is 0.6 B.

The following information is provided in compliance with IC regulations:

Dell Inc.
One Dell Way
Round Rock, TX 78682 USA
512-338-4400

CE Notice (European Union)

Marking by the symbol CE indicates compliance of this Dell device to the EMC Directive and the Low Voltage Directive of the European Union. Such marking is indicative that this Dell system meets the following technical standards:

- EN 55022 — "Information Technology Equipment — Radio Disturbance Characteristics — Limits and Methods of Measurement."
- EN 55024 — "Information Technology Equipment - Immunity Characteristics - Limits and Methods of Measurement."
- EN 61000-3-2 — "Electromagnetic Compatibility (EMC) - Part 3: Limits - Section 2: Limits for Harmonic Current Emissions (Equipment Input Current Up to and Including 16 A Per Phase)."
- EN 61000-3-3 — "Electromagnetic Compatibility (EMC) - Part 3: Limits - Section 3: Limitation of Voltage Fluctuations and Flicker in Low-Voltage Supply Systems for Equipment With Rated Current Up to and Including 16 A."
- EN 60950 — "Safety of Information Technology Equipment."

NOTE: EN 55022 emissions requirements provide for two classifications:

- Class A is for typical commercial areas.
- Class B is for typical domestic areas.

RF INTERFERENCE WARNING: This is a Class A product. In a domestic environment this product may cause radio frequency (RF) interference, in which case the user may be required to take adequate measures.

This Dell device is classified for use in a typical Class B domestic environment.

A "Declaration of Conformity" in accordance with the preceding directives and standards has been made and is on file at Dell Inc. Products Europe BV, Limerick, Ireland.

ENERGY STAR® Compliance

Any Dell product bearing the ENERGY STAR® emblem on the product or on a start-up screen is certified to comply with Environmental Protection Agency (EPA) ENERGY STAR® requirements as configured when shipped by Dell.

The proper operation of the function requires a computer with VESA® DPM™ power management capabilities. When used with a computer equipped with VESA® DPM™, the monitor is ENERGY STAR®-compliant. As an ENERGY STAR® Partner, Dell Inc. has determined that this product meets the ENERGY STAR® guidelines for energy efficiency.

ENERGY STAR® Emblem

The EPA's ENERGY STAR® program is a joint effort between the EPA and manufacturers to reduce air pollution by promoting energy-efficient products.

You can help reduce electricity usage and its side effects by turning off your product when it is not in use for extended periods of time, particularly at night and on weekends.

Recycling Information

Dell recommends that customers dispose of their used computer hardware, monitors, printers, and other peripherals in an environmentally sound manner. Potential methods include reuse of parts or whole products and recycling of products, components, and/or materials.

Waste Electrical and Electronic Equipment (WEEE) Directive

In the European Union, this label indicates that this product should not be disposed of with household waste. It should be deposited at an appropriate facility to enable recovery and recycling. For information on how to recycle this product responsibly in your country, please visit: **www.euro.dell.com/recycling**.

NOM Information (Mexico Only)

The following information is provided on the device(s) described in this document in compliance with the requirements of the official Mexican standards (NOM):

Exporter:	Dell Inc. One Dell Way Round Rock, TX 78682
Importer:	Dell Computer de México, S.A. de C.V. Paseo de la Reforma 2620 - 11° Piso Col. Lomas Altas 11950 México, D.F.
Ship to:	Dell Computer de México, S.A. de C.V. al Cuidado de Kuehne & Nagel de México S. de R.L. Avenida Soles No. 55 Col. Peñon de los Baños 15520 México, D.F.
Model number:	Dell Laser MFP 1815n
Supply voltage:	110-127 VAC
Frequency:	50/60 Hz
Current Consumption:	5.0 A
Output voltage:	24 VDC, 5 VDC
Output current:	2.0 A, 1.0 A

Index

A

ADF (Automatic Document Feeder), loading, 46

ADF rubber pad, replace, 71

answering machine, 69

C

canceling
- copy, 50
- fax, 64
- print, 49

changing, display language, 22

characters, entering, 23

cleaning
- drum, 78
- exterior, 76
- interior, 76
- scanner, 77

clearing
- document jams, 79
- paper jams, 81

computer modem, 70

contacting, Dell, 98

copying, 50
- canceling, 52
- contrast, 51
- default setting, 53
- duplex, 53
- number of pages, 50
- quality, 51
- size, 50
- special features, 52
- tray selecting, 53

D

date and time, setting, 24

Dell,contacting, 98

DIMM, installing, 91

display language, changing, 22

document
- jam clearing, 79
- loading
  - ADF, 47
  - scanner glass, 46

drum, cleaning, 78

F

faxing, 62
- advanced features, 68
- canceling, 64
- contrast, 62
- features, 67
- receiving, 64
- resolution, 62
- sending
  - automatically, 63
  - manually, 64
- setting system, 65

forwarding faxes to e-mail address, 65

G

group dial, setting, 25

I

installing
- memory, 91
- optional tray, 94
- software, 30

IP address, assigning, 32

J

jam, clearing
- document, 79
- paper, 81

L

loading document
- ADF, 47
- scanner glass, 46

loading, paper
- in the bypass tray, 41
- in the tray, 38

M

maintenance, 71

memory, installing, 91

menu functions/menu tree, 21

N

network cable, attaching, 26

network configuration page, printing, 27

O

operator panel, 20

option, installing
- memory, 91
- optional tray, 94

ordering supplies, 3, 73

P

paper
- card stock, 44
- custom size, 45
- envelope, 44
- labels, 44
- plain, 44
- transparencies, 44

paper jam, clearing, 81

paper size, setting, 45

paper type, setting, 45, 51

paper, loading
- in the bypass tray, 41
- in the tray, 38

parts of your printer, 13

pause, inserting, 24

printer ID,setting, 22

printing, 49

R

replacement parts, 71

report, printing, 68

S

safety information, 17

scanner
- cleaning, 77
- unlocking, 19

scanning, 54
- to an application, 55
- to email addresses, 61
- to the USB memory key, 58
- using network scan, 56
- WIA driver, 60

software
- installing
  - local, 30
  - network, 33
- overview, 29

speed dial, setting, 25

supplies, ordering, 73

support
- contacting Dell, 98

T

time and date
- setting, 24

toner cartridge
- ordering, 3, 73
- replacing, 74

troubleshooting, 79

U

uninstalling, software, 34

USB memory key
- plugging, 58
- scanning, 58