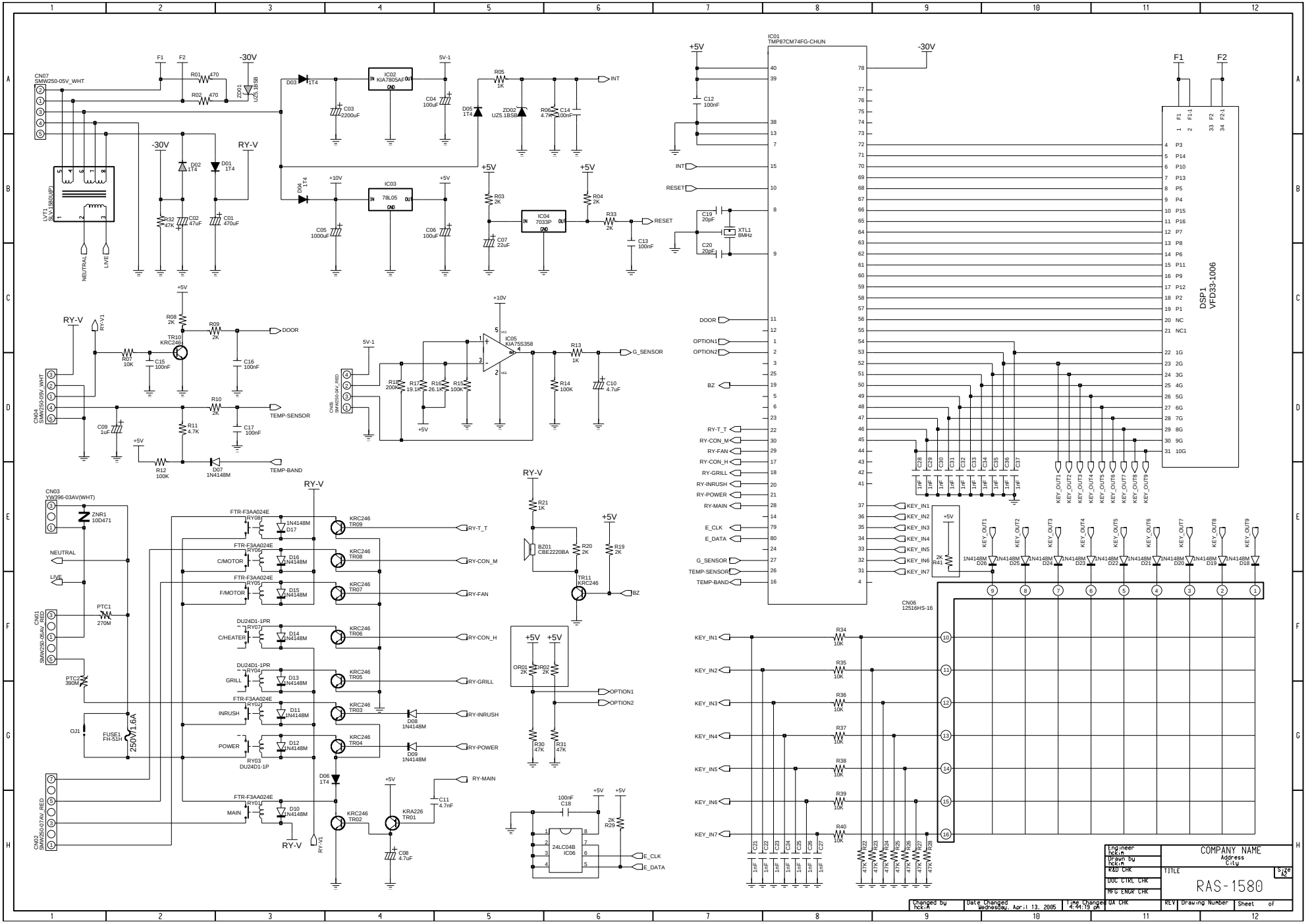
CN07
SMW250-05V_WHT
F1
F2
-30V
R01 470
R02 470
ZD01
UZ5.1BSB
D03 1T4
IC02
KIA7805AF
5V-1
C03 2200uF
C04 100uF
D05 1T4
ZD02
UZ5.1BSB
R05 1K
R06 4.7K
C14 100nF
INT
D02 1T4
D01 1T4
RY-V
LVT1
SLV1380(UP)
NEUTRAL
LIVE
R32 47K
C02 47uF
C01 470uF
D04 1T4
+10V
IC03
78L05
C05 1000uF
C06 100uF
+5V
R03 2K
C07 22uF
IC04
7033P
R04 2K
R33 2K
RESET
C13 100nF
IC01
TMP87CM74FG-CHUN
C12 100nF
C19 20pF
C20 20pF
XTL1
8MHz
DOOR
OPTION1
OPTION2
BZ
RY-T_T
RY-CON_M
RY-FAN
RY-CON_H
RY-GRILL
RY-INRUSH
RY-POWER
RY-MAIN
E_CLK
E_DATA
G_SENSOR
TEMP-SENSOR
TEMP-BAND
KEY_IN1
KEY_IN2
KEY_IN3
KEY_IN4
KEY_IN5
KEY_IN6
KEY_IN7
DSP1
VFD33-1006
KEY_OUT1
KEY_OUT2
KEY_OUT3
KEY_OUT4
KEY_OUT5
KEY_OUT6
KEY_OUT7
KEY_OUT8
KEY_OUT9
CN04
SMW250-09V_WHT
R08 2K
R09 2K
TR10
KRC246
R07 10K
C15 100nF
C16 100nF
R10 2K
C09 1uF
R11 4.7K
C17 100nF
R12 100K
D07
1N4148M
TEMP-SENSOR
TEMP-BAND
CN05
SMW250-04V_RED
IC05
KIA7S358
R13 1K
R14 100K
C10 4.7uF
R15 100K
R16 26.1K
R17 19.1K
R18 200K
CN03
YW396-03AV(WHT)
ZNR1
10D471
PTC1
270M
CN01
SMW250-05AV_RED
PTC2
390M
OJ1
FUSE1
FH-S1H
250V/1.6A
CN02
SMW250-07AV_RED
FTR-F3AA024E
RY08
RY06
RY05
RY07
RY04
RY02
RY03
DU24D1-1PR
DU24D1-1PR
RY01
C/MOTOR
F/MOTOR
C/HEATER
GRILL
INRUSH
POWER
MAIN
1N4148M
KRC246
TR09
TR08
TR07
TR06
TR05
TR03
TR04
TR02
KRA226
TR01
D06 1T4
C11 4.7nF
C08 4.7uF
RY-V1
RY-MAIN
RY-T_T
RY-CON_M
RY-FAN
RY-CON_H
RY-GRILL
RY-INRUSH
RY-POWER
R21 1K
BZ01
CBE2220BA
R20 2K
R19 2K
TR11
KRC246
BZ
OR01 2K
OR02 2K
R30 47K
R31 47K
OPTION1
OPTION2
100nF
C18
24LC04B
IC06
2K
R29
E_CLK
E_DATA
CN06
12516HS-16
R41 2K
R34 10K
R35 10K
R36 10K
R37 10K
R38 10K
R39 10K
R40 10K
47K
R22
R23
R24
R25
R26
R27
R28
C21
C22
C23
C24
C25
C26
C27
1nF
C28
C29
C30
C31
C32
C33
C34
C35
C36
C37
D26
D25
D24
D23
D22
D21
D20
D19
D18
COMPANY NAME
Address
City
TITLE
RAS-1580
Size A2
Engineer hckim
Drawn by hckim
K&D CHK
DOC CTRL CHK
MFG ENGR CHK
QA CHK
Changed by hckim
Date Changed Wednesday, April 13, 2005
Time Changed 4:44:19 pm
REV
Drawing Number
Sheet of

SCHEMATIC DIAGRAM
(AMC6158BC)

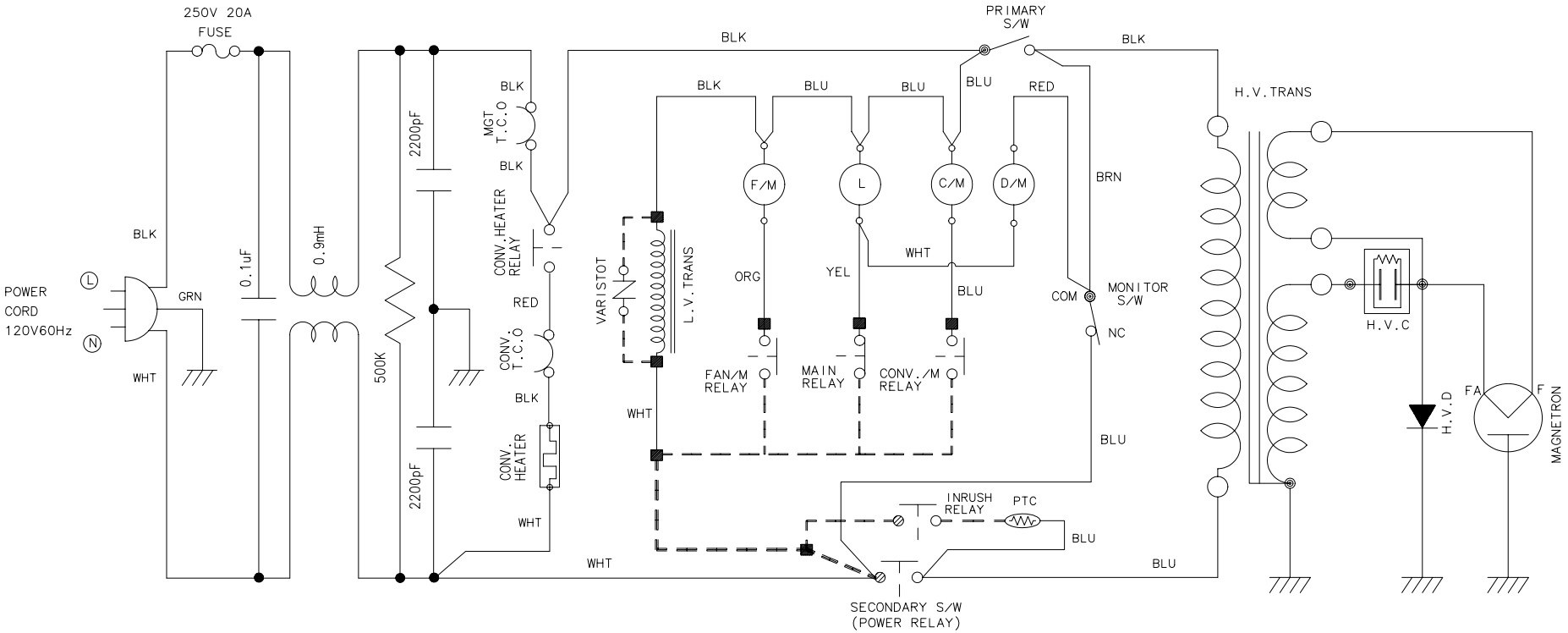

NOTE
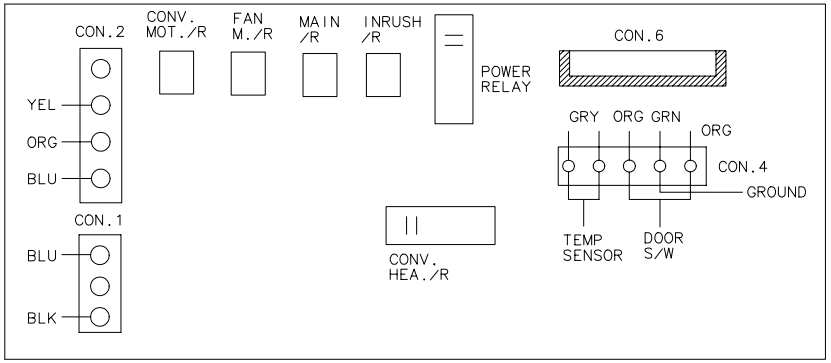
- DOOR : OPENED
- ■ : PCB IN/OUT POINT
- - - - : PAB PATTEN