Microwave Oven

User manual

ME80H2160R**

SAMSUNG

Contents

Important safety instructions 3

What you need to know about safety instructions 3
Precautions to avoid possible exposure to excessive microwave energy 3
Important safety symbols and precautions 4
Grounding instructions 5
Use of extension cords 5
Critical installation warnings 6
Installation cautions 7
Critical usage warnings 7
Usage cautions 8
Critical cleaning instructions 9
California proposition 65 warning 9

Setting up your new microwave oven 12

Checking the parts 12
Setting up your microwave oven 13
Installing the metal shelf 13
Learning about the control panel 13
Set Time 14
Turn Table (On/Off) 14
Kitchen Timer 14
Filp Open/Close Hidden Key 14
Child Lock 15
Stop Button 15
Eco Mode 15
+30 sec 15
Cooktop Lamp (High/Low/Off) 15
Vent Fan (4/3/2/1/Off) 15
System Settings 16
Smart control 17
Voice control 17
Auto connectivity 19

Using your microwave oven 20

Microwave 20
Power levels 20
One-stage cooking 20
Multi-stage cooking (maximum of 2 stages) 20
Popcorn 20
Reheat 21
Defrost 21
Sensor Cook 22
Auto Cook 23
Keep Warm 27

Cookware guide 28

Recommended cooking utensils 28
Limited use items 28
Not recommended 28
Testing utensils 28

Cooking guide 29

Cooking techniques 29
General cooking recommendations 30
Guide for cooking eggs in your microwave 30
Guide for cooking vegetables in your microwave 30

Cleaning and maintaining your microwave oven 31

Cleaning the exterior 31
Cleaning under your microwave oven 31
Cleaning the control panel 31
Cleaning the door and door seals 31
Cleaning the interior 31
Cleaning the turntable and roller rings 31
Storing and repairing your microwave oven 32
Replacing the cooktop/night light 32
Replacing the oven light 32
Cleaning the grease filter 33
Replacing the charcoal filter 34

Troubleshooting 35

Check points 35
Information codes 38

Appendix 39

Specifications 39

Warranty (USA) 39

Samsung MICROWAVE OVEN 39

Warranty (CANADA) 41

Samsung over-the-range (otr) microwave oven 41

Congratulations on your new Samsung microwave oven. This manual contains important information on the installation, use and care of your appliance. Please take time to read this manual to take full advantage of your microwave oven's many benefits and features.

WHAT YOU NEED TO KNOW ABOUT SAFETY INSTRUCTIONS

Warnings and Important Safety Instructions in this manual do not cover all possible conditions and situations that may occur. It is your responsibility to use common sense, caution, and care when installing, maintaining, and operating your microwave oven.

PRECAUTIONS TO AVOID POSSIBLE EXPOSURE TO EXCESSIVE MICROWAVE ENERGY

A. Do not attempt to operate this oven with the door open since open-door operation can result in harmful exposure to microwave energy. It is important not to defeat or tamper with the safety interlocks.

B. Do not place any object between the oven front face and the door or allow soil or cleaner residue to accumulate on the sealing surface.

C. Do not operate the oven if it is damaged. It is particularly important that the oven door close properly and that there is no damage to the:

1. Door (bent),
2. Hinges and latches, (broken or loosened),
3. Door seals and sealing surface.

D. The oven should not be adjusted or repaired by anyone except properly qualified service personnel.

When using any electrical appliance, basic safety precautions should be followed, including the following:

⚠ WARNING

To reduce risk of burns, electric shock, fire, personal injury or exposure to excessive microwave energy:

1. Read all safety instructions before using the appliance.
2. Read and follow the specific **Precautions to avoid possible exposure to excessive microwave energy on page 3**.
3. This appliance must be grounded. Connect only to properly grounded outlets. See Important **Grounding instructions on page 5** of this manual.
4. Install or locate this appliance only in accordance with the provided installation instructions.
5. Some products such as whole eggs and sealed containers (for example, closed glass jars) can explode if heated rapidly. Never heat them in a microwave oven.
6. Use this appliance only for its intended use as described in the manual.
   Do not put corrosive chemicals or vapors in or on this appliance. This type of oven is specifically designed to heat, cook, or dry food. It is not designed for industrial or laboratory use.
7. HOT CONTENTS CAN CAUSE SEVERE BURNS. DO NOT ALLOW CHILDREN TO USE THE MICROWAVE.
8. Do not operate this appliance if it has a damaged cord or plug, if it is not working properly, or if it has been damaged or dropped.
9. This appliance should be repaired or serviced only by qualified service personnel. Contact the nearest authorized service facility for examination, repair, or adjustment.
10. Do not cover or block any openings on the appliance.
11. Do not tamper with or make any adjustments or repairs to the door.
12. Do not store this appliance outdoors. Do not use this product near water, for example, near a kitchen sink, in a wet basement, near a swimming pool, or similar locations.
13. Do not immerse the cord or plug in water.
14. Keep the cord away from heated surfaces. (including the back of the oven).
15. Do not let the cord hang over the edge of a table or counter.

SAVE THESE INSTRUCTIONS

16. When cleaning surfaces of the door and oven that come together when the door closes, use only mild, nonabrasive soaps, or detergents applied with a sponge or soft cloth. Unplug the plug before cleaning.
17. To reduce the risk of fire in the oven cavity:
    a. Do not overcook food. Carefully attend the appliance when paper, plastic, or other combustible materials are placed inside the oven to facilitate cooking.
    b. Remove wire twist-ties from paper or plastic bags before placing the bags in the oven.
    c. If materials inside the oven ignite, keep the oven door closed, turn the oven off, and disconnect the power cord, or shut off the power at the fuse or circuit breaker panel. If the door is opened, the fire may spread.
    d. Do not use the cavity for storage purposes. Do not leave paper products, cooking utensils, or food in the cavity when not in use.
18. Liquids, such as water, milk, coffee, or tea can be overheated beyond the boiling point without appearing to be boiling. Visible bubbling or boiling when the container is removed from the microwave oven is not always present. THIS COULD RESULT IN VERY HOT LIQUIDS SUDDENLY BOILING OVER WHEN THE CONTAINER IS DISTURBED OR A SPOON OR OTHER UTENSIL IS INSERTED INTO THE LIQUID. To reduce the risk of injury:
    a. Do not overheat liquid.
    b. Stir liquid both before and halfway through heating it.
    c. Do not use straight-sided containers with narrow necks.
    d. After heating, allow the container to stand in the microwave oven for a short time before removing the container.
    e. Use extreme care when inserting a spoon or other utensil into the container.
19. Oversized foods or oversized metal utensils should not inserted into the microwave oven as they may cause a fire or risk of electric shock.
20. Do not clean the microwave with a metal scouring pad. A piece of metal could come off the pad, contact electrical parts, and cause an electric shock.
21. Do not put paper products into the oven when you are operating it in the toaster mode.
22. Do not store any materials, other than manufacturer's recommended accessories, in this oven when not in use.
23. Do not cover the racks or any other part of the oven with metal foil. This will cause the oven to overheat.

SAVE THESE INSTRUCTIONS

IMPORTANT SAFETY SYMBOLS AND PRECAUTIONS

What the icons and signs in this user manual mean:

WARNING

Hazards or unsafe practices that may result in **severe personal injury or death**.

CAUTION

Hazards or unsafe practices that may result in **minor personal injury or property damage**.

CAUTION

To reduce the risk of fire, explosion, electric shock, or personal injury when using your microwave oven, follow these basic safety precautions.

	Do NOT attempt.		Unplug the power plug from the wall socket.
	Do NOT disassemble.		Make sure the machine is grounded to prevent electric shock.
	Do NOT touch.		Call the service center for help.
	Follow directions explicitly.		Note

These warning signs are here to prevent injury to you and others. Please follow them explicitly. After reading this section, keep it in a safe place for future reference.

⚠ CAUTION

1. Clean Ventilating Hoods Frequently - Grease should not be allowed to accumulate on the hood of the filter.
2. When flaming foods under the hood, turn the fan on.
3. Use care when cleaning the vent-hood filter. Corrosive cleaning agents, such as lye-based oven cleaner, may damage the filter.

GROUNDING INSTRUCTIONS

This appliance must be grounded. In the event of an electrical short circuit, grounding reduces the risk of electric shock by providing an escape wire for the electrical current. This appliance is equipped with a cord that includes a grounding wire and a grounding plug. The plug must be plugged into an outlet that is properly installed and grounded.

⚠ WARNING

Improper use of the grounding plug can result in a risk of electric shock.

- Plug into a grounded, 3 pronged outlet. Do not remove the third (grounding) prong. Do not use an adaptor or otherwise thwart the safety function of the grounding plug.
- Consult a qualified electrician or service person if you do not understand the grounding instructions or if you are not sure if the appliance is properly grounded.
- We do not recommend using an extension cord with this appliance. If the power-supply cord is too short, have a qualified electrician or serviceman install an outlet near the appliance. However, if it is necessary to use an extension cord, read and follow the '**Use of Extension Cords**' section below.

USE OF EXTENSION CORDS

A short power-supply cord is provided to reduce the risk of your becoming entangled in or tripping over a longer cord. Longer cord sets or extension cords are available and you can use them if you exercise care. If you use a long cord or an extension cord:

1. The marked electrical rating of the cord set or extension cord should be at least as great as the electrical rating of the appliance.
2. The extension cord must be a grounding-type 3-wire cord and it must be plugged into a 3-slot outlet.
3. The longer cord should be arranged so that it will not drape over the counter top or tabletop where it can be pulled on by children or tripped over accidentally. If you use an extension cord, the interior light may flicker and the speed of the blower may vary when the microwave oven is on. Cooking times may be longer too.

SAVE THESE INSTRUCTIONS

CRITICAL INSTALLATION WARNINGS

This appliance must be installed by a qualified technician or service company.
- Failing to have a qualified technician install the oven may result in electric shock, fire, an explosion, problems with the product, or injury.

Unpack the oven, remove all packaging material and examine the oven for any damage such as dents on the interior or exterior of the oven, broken door latches, cracks in the door, or a door that is not lined up correctly. If there is any damage, do not operate the oven and notify your dealer immediately.

Make sure to install your oven in a location with adequate space.

Remove all foreign substances such as dust or water from the power plug terminals and contact points using a dry cloth on a regular basis.
- Unplug the power plug and clean it with a dry cloth.
- Failing to do so may result in electric shock or fire.

Plug the power cord into a properly grounded 3 pronged outlet. Your oven should be the only appliance connected to this circuit.
- Sharing a wall socket with other appliances, using a power strip, or extending the power cord may result in electric shock or fire.
- Do not use an electric transformer. It may result in electric shock or fire.
- Ensure that the voltage, frequency and current provided match the product's specifications. Failing to do so may result in electric shock or fire.

Keep all packaging materials out of the reach of children. Children may use them for play.

This appliance must be properly grounded. Read and follow the specific **Grounding instructions** found in the beginning of this section. Do not ground the appliance to a gas pipe, plastic water pipe, or telephone line.
- This may result in electric shock, fire, an explosion, or problems with the product.
- Never plug the power cord into a socket that is not grounded correctly and make sure that it is grounded in accordance with local and national codes.

Do not cut or remove the third (ground) prong from the power cord under any circumstances.

The microwave requires a separate branch circuit single grounded outlet of at least 15 A and max of 20 A.

Do not install this appliance in a humid, oily, or dusty location, or in a location exposed to direct sunlight or water (rain drops).
- This may result in electric shock or fire.

Plug the power plug into the wall socket firmly. Do not use a damaged power plug, damaged power cord, or loose wall socket.
- This may result in electric shock or fire.

Do not mount over a sink.

Do not pull or excessively bend the power cord.

Do not twist or tie the power cord.

Do not hook the power cord over a metal object, place a heavy object on the power cord, insert the power cord between objects, or push the power cord into the space behind the appliance.
- This may result in electric shock or fire.

Do not pull the power cord when you unplug the oven.
- Unplug the oven by pulling the plug only.
- Failing to do so may result in electric shock or fire.

If the power plug or power cord is damaged, contact your nearest service center for a replacement or repair.

SAVE THESE INSTRUCTIONS

INSTALLATION CAUTIONS

Position the oven so that the plug is easily accessible.
- Failing to do so may result in electric shock or fire due to electric leakage.

Unplug the oven when it is not being used for long periods of time or during a thunder/lightning storm.
- Failing to do so may result in electric shock or fire.

CRITICAL USAGE WARNINGS

If the microwave appliance is flooded, please contact your nearest Samsung service center. Failing to do so may result in electric shock or fire.
Read and follow the specific '**Precautions to Avoid Possible Exposure to Excessive Microwave Energy**', found in the beginning of this Safety Information Section.
If the microwave generates a strange noise, a burning smell or smoke, unplug it immediately and contact your nearest Samsung service center.
- Failing to do so may result in electric shock or fire.

In the event of a gas leak (propane gas, LP gas, etc.), ventilate the room immediately.
Do not touch the microwave, power cord, or plug.
- Do not use a ventilating fan.
- A spark may result in an explosion or fire.

Take care that the door or any of the other parts do not come into contact with your body while the microwave is cooking or just after cooking.
- Failing to do so may result in burns.

In the event of a grease fire on the surface units below the microwave oven, smother the flaming pan on the surface unit by covering the pan completely with a lid, a cookie sheet, or a flat tray.
Never leave surface units beneath your microwave oven unattended at high heat settings. Boil overs cause smoking and greasy spillovers that may ignite and spread if the vent fan is operating. To minimize automatic fan operation, use adequate sized cookware and use high heat on surface units only when necessary.
If materials inside the microwave oven should ignite, keep the oven door closed, turn the oven off and disconnect the power cord, or shut off power at the fuse or circuit breaker panel. If the door is opened, the fire may spread.
Use of inadequately sized cookware on top of the stove may result in melting of microwave door or other damage.
- Always observe safety precautions when using your microwave oven. Never try to repair the oven on your own. There is dangerous voltage inside. If the oven needs to be repaired, contact an authorized service center near you.

Do not attempt to repair, disassemble, or modify the appliance yourself.
- Because a high voltage current enters the product chassis during operation, opening the chassis can result in electric shock or fire.
- You may be exposed to electromagnetic waves.
- If your microwave oven requires repair, contact your nearest Samsung service center.

If any foreign substance such as water enters the microwave, unplug it, and then contact your nearest service center.
- Failing to do so may result in electric shock or fire.

SAVE THESE INSTRUCTIONS

Do not touch the power plug with wet hands.
- This may result in electric shock.

Do not turn the appliance off by unplugging the power plug while the appliance is in operation.
- Plugging the power plug into the wall socket again may cause a spark and result in electric shock or fire.

Keep all packaging materials well out of the reach of children. Packaging materials can be dangerous to children.
- If a child places a bag over its head, the child can suffocate.

Do not let children or any person with reduced physical, sensory or mental capabilities use this appliance unsupervised. Make sure that the appliance is out of the reach of children.
- Failing to do so may result in electric shock, burns, or injury.

Do not touch the inside of the appliance immediately after cooking. The inside of the appliance will be hot.
- The heat on the inside of your microwave oven can cause burns.

Do not put aluminum foil (except as specifically directed in this manual), metal objects (such as containers, forks, etc.), or containers with golden or silver rims into the microwave.
- These objects can cause sparks or a fire.

Do not use or place flammable sprays or objects near the microwave oven.
- Heat from the microwave can cause flammable sprays to explode or burn.
- Failing to do so may result in electric shock or injury.

Do not tamper with or make any adjustments or repairs to the door. Under no circumstances should you remove the outer cabinet.
Do not store or use your microwave oven outdoors.

USAGE CAUTIONS

If the surface of the microwave is cracked, turn it off.
- Failing to do so may result in electric shock.

Dishes and containers can become hot. Handle with care.
Hot foods and steam can cause burns. Carefully remove container coverings, directing steam away from your hands and face.
Remove lids from baby food before heating. After heating baby food, stir well to distribute the heat evenly. Always test the temperature by tasting before feeding the baby. The glass jar or surface of the food may appear to be cooler than the food in the interior, which can be so hot that it will burn the infant's mouth.
Make sure all cookware used in your microwave oven is suitable for microwaving.
Use microwavable cookware in strict compliance with such manufacturer's recommendations.

Do not stand on top of the microwave or place objects (such as laundry, oven covers, lighted candles, lighted cigarettes, dishes, chemicals, metal objects, etc.) on the appliance.
- Items, such as a cloth, may get caught in the door.
- This may result in electric shock, fire, problems with the product, or injury.

Do not operate the appliance with wet hands.
- This may result in electric shock.

Do not spray volatile material such as insecticide onto the surface of the appliance.
- As well as being harmful to humans, it may also result in electric shock, fire or problems with the product.

Do not place the appliance over a fragile object such as a sink or glass object.
- This may result in damage to the sink or glass object.

SAVE THESE INSTRUCTIONS

Do not put your face or body close to the appliance while it is cooking or when opening the door just after cooking.

- Take care that children do not come too close to the appliance.
- Failing to do so may result in children burning themselves.

Do not place food or heavy objects over the door.

- When you open the door, the food or object may fall and this may result in burns or injury.

Do not abruptly cool the door, the inside of the appliance, or the dish by pouring water over it during or just after cooking.

- This may result in damage to the appliance. The steam or water spray may result in burns or injury.

Do not cook without the glass tray in place on the oven floor. Food will not cook properly without the tray.

Do not defrost frozen beverages in narrow-necked bottles. The containers can break.

Do not scratch the glass of your microwave oven door with a sharp object.

- This may result in the glass being damaged or broken.

Do not store anything directly on top of the appliance when it is in operation.

Do not use sealed containers. Remove seals and lids before use. Sealed containers can explode due to buildup of pressure even after the oven has been turned off.

CRITICAL CLEANING INSTRUCTIONS

Do not clean the appliance by spraying water directly onto it.

Do not use benzene, thinner, or alcohol to clean the appliance.

- This may result in discoloration, deformation, damage, electric shock, or fire.

Before cleaning or performing maintenance, unplug the appliance from the wall socket. Then, remove food waste from the door and cooking compartment.

- Failing to do so may result in electric shock or fire.

Take care not to hurt yourself when cleaning the appliance.
(external/internal)

- You may hurt yourself on the sharp edges of the appliance.

Do not clean the appliance with a steam cleaner.

- This may result in corrosion.

Keep the inside of your microwave oven clean. Food particles or spattered oils stuck to the oven walls or floor can cause paint damage and reduce the efficiency of the oven.

CALIFORNIA PROPOSITION 65 WARNING

⚠ WARNING

Cancer and Reproductive Harm - www.P65Warnings.ca.gov

SAVE THESE INSTRUCTIONS

1. FCC NOTICE

FCC STATEMENT :

This equipment generates and uses ISM frequency energy and if not installed and used properly, that is in strict accordance with the manufacturer's instructions, may cause interference to radio and television reception. It has been type tested and found to comply with limits for ISM Equipment pursuant to part 18 of FCC Rules, which are designed to part 18 of FCC Rules, which are designed to provide residential installation.
However, there is no guarantee that interference will not occur in a particular installation. If this equipment does cause interference to radio or television reception, which can be determined by turning the equipment off and on, the user is encouraged to try to correct the interference by one or more of the following:

- Reorient the receiving antenna of the radio or television.
- Relocate the Microwave Oven with respect to the receiver.
- Move the microwave oven away from the receiver.
- Plug the microwave oven into a different outlet so that the microwave oven and the receiver are on different branch codes.

The manufacturer is not responsible for any radio of TV interference caused by unauthorized modification to this microwave oven. It is the responsibility of the user to correct such interference.
This equipment has been tested and found to comply with the limits for a Class B digital device, pursuant to part 15 of the FCC Rules. These limits are designed to provide reasonable protection against harmful interference in a residential installation. This equipment generates, uses and can radiate radio frequency energy and, if not installed and used in accordance with the instructions, may cause harmful interference to radio communications. However, there is no guarantee that interference will not occur in a particular installation. If this equipment does cause harmful interference to radio or television reception, which can be determined by turning the equipment off and on, the user is encouraged to try to correct the interference by one or more of the following measures:

- Reorient or relocate the receiving antenna.
- Increase the separation between the equipment and receiver.
- Connect the equipment into an outlet on a circuit different from that to which the receiver is connected.
- Consult the dealer or an experienced radio/TV technician for help.

SAVE THESE INSTRUCTIONS

⚠ WARNING

Any changes or modifications to this unit not expressly approved by the party responsible for compliance could void the user's authority to operate the equipment.

FCC RF Exposure Requirements

This device complies with FCC RF radiation exposure limits set forth for an uncontrolled environment. The antenna(s) used for this transmitter must not be co-located or operating in conjunction with any other antenna or transmitter and must be installed to provide a separation distance of at least 20cm from all persons.

2. IC Notice

This device contains licence-exempt transmitter(s)/receiver(s) that comply with Innovation, Science and Economic Development Canada's licence-exempt RSS(s). Operation is subject to the following two conditions:

1) This device may not cause interference.
2) This device must accept any interference, including interference that may cause undesired operation of the device.
   - CAN ICES(B)/NMB(B)

IC RADIATION EXPOSURE STATEMENT:

This equipment complies with IC RSS-102 radiation exposure limits set forth for an uncontrolled environment. This equipment should be installed and operated so there is at least 8 inches (20 cm) between the radiator and your body. This device and its antenna(s) must not be co-located or operated in conjunction with any other antenna or transmitter.

CALIFORNIA PROPOSITION 65 WARNING

⚠ WARNING

Cancer and Reproductive Harm - www.P65Warnings.ca.gov.

SAVE THESE INSTRUCTIONS

Setting up your new microwave oven

Be sure to follow these instructions closely so that your new microwave oven works properly.

Checking the parts

Carefully unpack your microwave oven, and make sure you've received all the parts shown below. If your microwave oven was damaged during shipping, or if you do not have all the parts, contact the Samsung Call Center.
(Refer to the WARRANTY AND SERVICE INFORMATION on page 39.)

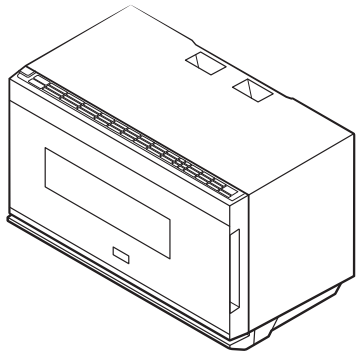

Microwave oven

* Glass tray

* Roller guide ring

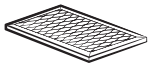

* Charcoal filter

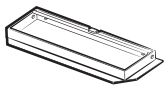

* Exhaust adaptor

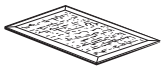

Grease filter bottom (2 ea)

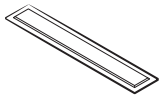

Grease filter front (2 ea)

* Hardware kit
(Screws & Brackets)

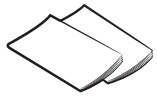

Manuals
(User & Installation)

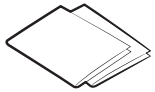

Templates
(Top & Wall)

NOTE

If you need an accessory marked with an * (asterisk), please contact the Samsung Call Center using the phone number listed on the last page of this manual or visit our on-line parts web site at www.samsungparts.com.

Setting up your microwave oven

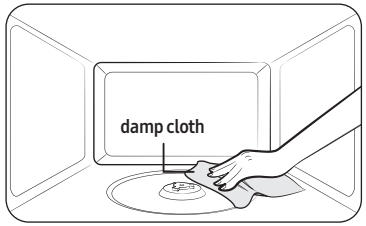

1. Open the door by pulling the handle on the right side of the door.
2. Wipe the inside of your microwave oven with a damp cloth.

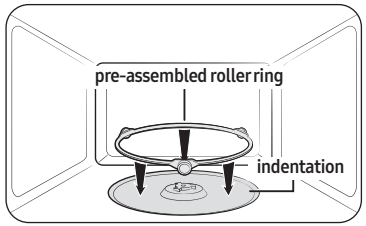

3. Install the pre-assembled ring into the indentation at the center of the microwave oven.

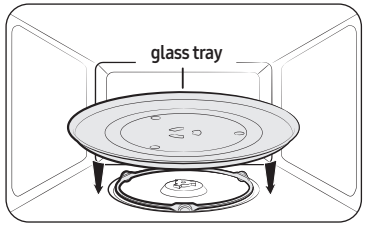

4. Place the glass tray securely in the center of the pre-assembled roller ring.

Installing the metal shelf

When you need to use the Metal Shelf, place it on the plastic hooks inside your oven and make sure it is positioned properly to avoid electrical arcing that can damage your oven.

⚠ **CAUTION**

Make sure the shelf is positioned properly inside the microwave to prevent damage to the oven from arcing.

Learning about the control panel

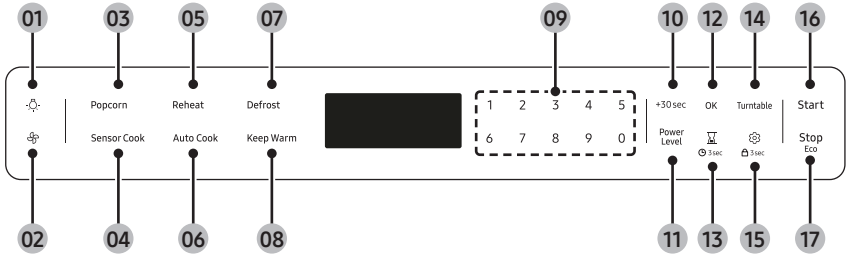

01 Cooktop Lamp Button (High/Low/Off)
02 Vent Fan Button (4 Speed & On/Off)
03 Popcorn Button
04 Sensor Cook Button
05 Reheat Button
06 Auto Cook Button
07 Defrost Button
08 Keep Warm Button
09 Number Pad
10 +30 sec Button
11 Power Level Button
12 OK Button
13 Kitchen Timer /Clock Setting Button
14 Turntable Button
15 Settings / Child Lock Button
16 Start Button
17 Stop / Eco Button

Setting up your new microwave oven

Set Time

Your microwave oven is equipped with a built-in clock. Set the clock when first installing your microwave oven or after a power failure. The time is displayed whenever the microwave oven is not being used.

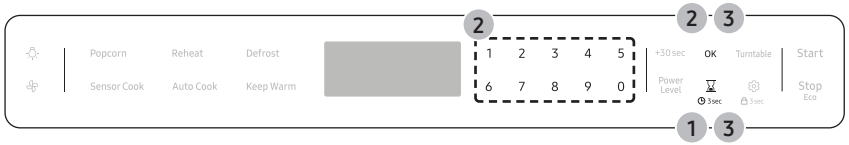

1. Touch and hold the **Clock** button for 3 seconds.
2. Use the **numeric** buttons to enter the time and then touch the **OK** button.
3. For12 hour display mode, touch **Clock** button to set AM or PM and then touch **OK** button.

Turn Table (On/Off)

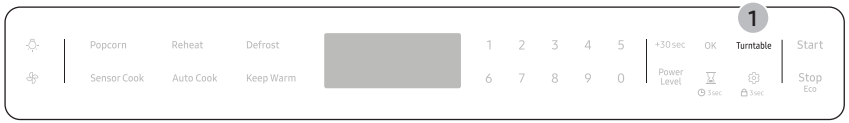

1. Touch the **Turntable** button to turn it on or off.

NOTE

You can use this feature only on manual cooking mode.
If the turntable does not rotate for an extended period of time, food may burn.
For best cooking results, leave the turntable feature on.

CAUTION

The turntable may become too hot to touch.
Use pot holders to handle the turntable during and after cooking.

Kitchen Timer

Your microwave has a built-in timer function - the **Kitchen Timer**. Use the Kitchen Timer for timing up to 99 minutes, 99 seconds.

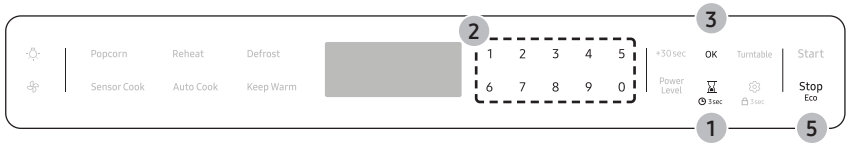

1. Touch the **Kitchen Timer** button.
2. Use **numeric** buttons to set the time.
3. Touch the **OK** button.
4. The display counts down, and then beeps when the time has elapsed.
5. To cancel the timer setting, touch the **Stop** button.

Filp Open/Close Hidden Key

Your microwave can use the **Flip Open/Close Hidden Key**, which can open and close the Flip.

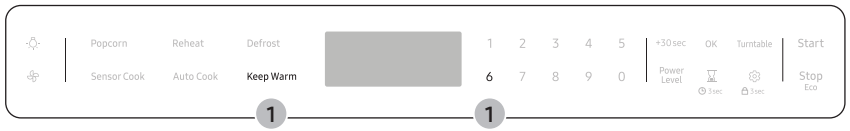

1. Touch and hold the **Keep Warm** and **numeric button 6** for 3 seconds to open and close the Flip

Child Lock

The **Child Lock** function allows you to lock all buttons so that the microwave oven cannot be operated by children accidentally.

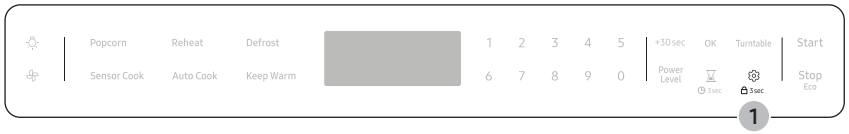

Activating / Deactivating

1. If you want to activate or deactivate the child lock function, touch the **Settings / Child Lock** button for 3 seconds. The display will show 🔒 when the oven is locked.

Stop Button

The **Stop** button allows you to clear instructions you have entered. It also allows you to pause your microwave oven's cooking cycle, so that you can check the food.

- To pause the oven during cooking, touch the **Stop** button once.
  To restart, touch the **Start** button.
- To stop cooking, erase instructions, and return the oven display to the time of day, touch the **Stop** button twice.
- To clear instructions you have just entered, touch the **Stop** button once, and then re-enter the instructions.
- To cancel a timer setting, touch the **Stop** button once.

Eco Mode

Eco Mode reduces standby power usage. When you touch the **Stop / Eco** button once, the display will go out and the microwave shifts to a mode which minimizes power usage. To cancel the **Eco mode,** touch any button.

+30 sec

This feature offers a convenient way to increase cooking time in manual cooking mode.

1. In standby mode, touching **+30 sec** button will add 30 seconds of microwave mode.
2. If the oven is in manual cooking mode, touching **+30 sec** button will add cooking time by 30 seconds.

Cooktop Lamp (High/Low/Off)

Touch the **Cooktop Lamp** button to turn the cooktop lamp on or off. Touch the button once for high, twice for low and three times to turn the cooktop lamp off.

Vent Fan (4/3/2/1/Off)

The vent fan removes steam and other vapors that result from cooking on the cooktop below. Touch the **Vent Fan** button once for boost fan, twice for high fan, three times for medium fan and four times for low fan speed. Touch the button five times to turn the fan off.
When the Vent Fan operates, the Vent Flip opens.

NOTE

- The exhaust fan's speed may decrease when the oven's cooking function is activated.
- The Vent Fan protects the microwave from excess heat. It automatically turns on if it senses too much heat. If you have turned the fan on, you may find that you cannot turn it off. The fan will automatically turn off when the internal parts are cooled down. It may stay on for 30 minutes or more after the cooktop and microwave controls are turned off.

Setting up your new microwave oven

System Settings

You can customize your new microwave oven to suit your preferences.
To customize :

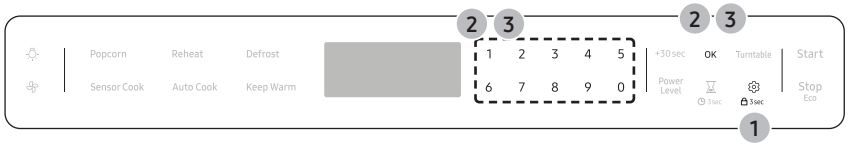

1. Touch the **Settings** button.
2. Touch the **numeric** buttons (1 - 6) to select a function you want to customize and then touch **OK** button.
3. Touch number **1** or **2** to change the options and then touch **OK** button.

Function		Description	Options	
1	Filter Remind	The filter remind function can be turned On and Off.	1	On
			2	Off
2	Weight Unit	Weight option can display in either pounds or grams.	1	lb
			2	g
3	Sounds	You can turn the sound On and Off.	1	On
			2	Off
4	Remind End Signal	The remind end signal can be turned On and Off.	1	On
			2	Off
5	Use 24-hour format	The clock can display in either the 12 hr or 24 hr time mode.	1	12hr
			2	24hr
6	Wi-Fi	The Wi-Fi function can be turned On and Off.	1	On
			2	Off
7	Flip Lock	You can set the opening and closing of Flip.	1	On
			2	Off

NOTE

- If you change your mind while adjusting a setting, touch the **Stop** button to go back, and then adjust the setting again.
- If there is a power interruption, you will need to reset these options.
- If the **Filter Remind** function is On, the microwave will remind you to clean or replace the grease filter every four months. When it is time to clean or replace the grease filter, the microwave displays the '**Filter**' message to remind you to clean or replace the grease filter. To remove the message, touch the number 0 when the microwave is in standby mode. If you don`t want to receive this message, set the **Filter Remin**d function Off in **System Settings**.

Smart control

To use the microwave oven's Smart Control, you must download the SmartThings app to a mobile device.
Functions operated by the SmartThings app may not work smoothly if communication conditions are poor or the microwave oven is installed in a place with a weak Wi-Fi signal.

How to connect the microwave oven

1. Download and open the SmartThings app on your smart device.
2. Follow the app's on-screen instructions to connect your microwave oven.
3. To operate smart control function from the microwave oven, touch and hold **OK** button for 3 seconds.
4. Once the process is complete, the icon appears on your microwave oven display and the app will confirm you are connected.
5. If the connection icon does not turn on, follow the instruction on the app to reconnect.

Microwave Oven remote control using the SmartThings app	
Microwave Oven Monitoring	Check the status of the microwave oven
Microwave Oven Remote Control	Remotely control vent fan speed/cooktop lamp

NOTE

- For safety reasons, you cannot turn on the microwave oven remotely and you must specify the cooking time to enable remote control.
- Smart Control will not work properly if the Wi-Fi Connection is unstable.

Voice control

To use the microwave oven's Voice Control function, you need Bixby / Amazon Alexa App / Google Assistant App on your mobile device.

Bixby

Start conversation with Bixby on Samsung mobile by saying "Hi Bixby" or by pressing the side key.

Function	OTR Bixby Command
Turn Off/Stop	• Cancel the microwave • Turn off the microwave
Check Time	• Check the remaining time of the microwave • How much time is left on the microwave timer?
Check Status	• Check the microwave status • Check the status of the microwave
MW Hood Control	• Turn On/Off the microwave hood light • Trun On/Off hood power of microwave • Turn On/Off hood fan of microwave • Set the microwave hood fan speed to boost/high/mid/low
Send Auto Cook Recipe	• Cook pizza • Cook pizza for 2 • Cook 2 slices of pizza • Heat pizza • Heat pizza for 2 • Heat 2 slices of pizza • I want to cook pizza • I want to cook pizza for 2 • I want to cook 2 slices of pizza • Can you cook pizza? • Can you cook pizza for 2? • Can you cook 2 slices of pizza?

Setting up your new microwave oven

Amazon Alexa & Google Assistant

Samsung smart home appliances are supported by SmartThings skill in Alexa & action in Google Assistant.

Installation Guide

Here's how to link SmartThings account into Amazon Alexa or Google Assistant. SmartThings App and Alexa App (or Google Assistant App) Should be installed on your phone.

1. Setup the supported devices to SmartThings.
2. After device setup, tap **+** button on the screen.
3. Tap **Voice assistant** and link your Samsung account to Amazon Alexa. (or Google Assistant) Check the devices are visible on Amazon Alexa app. Then account linking is complete. (Check the devices are visible and set the location(home&room) of devices in Google home app. Then account linking is complete.)

Function	'Alexa'	'OK Google'
Turn Off/Stop	• Turn off the microwave • Stop the microwave	• Turn off the microwave • Stop the microwave
Check Status	• Is the microwave running? • Is the microwave on?	• Is the microwave running? • Is the microwave on?

Function	'Alexa'	'OK Google'
MW Hood Control	• Turn On/Off the (hood light, hood lamp, lamp,light) on microwave • Turn On/Off the (hood light, hood lamp) • Set the microwave (brightness, light level, lamp level) to [low, high] • Turn On/Off the (hood, fan, hood fan) on microwave[device name] • Turn On/Off the (hood, hood fan) • Set the microwave (hood, fan, hood fan) speed to [low, medium, high, boost]	• Turn On/Off the microwave (light, lamp) • Turn On/Off the (hood light, hood lamp) • Set the microwave (brightness, light level, lamp level) to [low, high] • Turn On/Off the (hood, fan, hood fan) on microwave • Turn On/Off the (hood, hood fan) • Set the microwave (hood, fan, hood fan) speed to [low, medium, high, boost]
Send Auto Cook Recipe	• Cook pizza • Heat pizza • I want to cook pizza • Can you cook pizza? • Cook pizza for 2 • Heat pizza for 2 • I want to cook pizza for 2 • Can you cook pizza for 2? • Cook 2 slices of pizza • Heat 2 slices of pizza • I want to cook 2 slices of pizza • Can you cook 2 slices of pizza?	

NOTE

- For safety reasons, you cannot turn on the microwave oven remotely.
- Below table is available menu for **Send Auto Cook Recipe** function.

Food	Amount	Instructions
Popcorn	3.0 oz	Cook only one microwave popcorn bag at a time. Be careful when removing the heated bag from the oven and opening it.
	3.5 oz	
Potatoes	2 potatoes	Pierce each potato several times with a fork. Place on the turntable in a spoke-like fashion. After cooking, let the potatoes stand for 3 - 5 minutes.
	4 potatoes	
Pizza	2 slices	Place pizza slices on a microwave-safe plate with the wide ends of the slices towards the outside edge of the plate. Do not let the slices overlap. Do not cover.
	4 slices	
Spinach	2 servings	Wash and clean the spinach. Place the spinach in a microwave safe bowl. Add 1 - 4 tablespoons of water (1 Tbsp per serving). Cover during cooking and stir afterwards.
	4 servings	
Brown rice	1 serving	Place 0.5 cups brown rice + 1 cup water for 2 servings or 1 cup brown rice + 2 cups water for 4 servings in a microwave safe bowl. Stir well before and fluff with a fork afterwards. Let stand 5 minutes before serving.
	2 servings	
Fish fillets	1 serving	Put the fresh fillets (cod, pollack, etc.) in a dish, and then cover with plastic wrap. Place the dish on the center of the turntable.
	2 servings	
Chicken nuggets	1 serving	Place a paper towel on a plate and arrange the frozen nuggets in a spoke-like fashion on the paper towel. Do not cover. Let stand for a minute after heating. NOTE Refer to the package directions for the serving size and the amount of food.
	2 servings	

Food	Amount	Instructions
French fries	1 serving	Place two paper towels on a microwave-safe plate and arrange the frozen french fries on the towels without letting them overlap. Blot the fries with additional paper towels after removing from the oven. Let stand for a minute. NOTE Refer to the directions on the packaging for the serving size and the amount of food.
	2 servings	
Melt butter	1 stick	Remove the wrapping and cut the butter in half vertically. Place the butter in a dish and cover with wax paper. Stir well after finishing and let stand for 1 - 2 minutes.
	2 sticks	
Soften cream cheese	1 package	Unwrap the cream cheese and place on a microwave-safe container. Cut in half vertically. Let stand for 2 minutes.

Auto connectivity

Auto Connectivity function lets you quickly connect the hood via Wi-Fi with a compatible Samsung cooktop after the hood and cooktop have been paired.
To turn the function on, press the Auto Connectivity button in SmartThings App.
To disconnect the hood and cooktop, press the Auto Connectivity button again. While the hood and cooktop are connected, the hood fan will automatically turn on when you turn on the cooktop. The hood fan will also turn off automatically when you turn off the cooktop.

NOTE

Auto connectivity function may not work normally when the temperature is set high.

Using your microwave oven

Microwave

Your microwave oven allows you to set two different cooking stages, each with its own time length and power level. The power level lets you control the heating intensity from Warm (1) to High (10).

Power levels

The 10 power levels allow you to choose the optimal power level for your cooking needs.

Power Level		Description	Power Level		Description
1	10	Warm	6	60	Simmer
2	20	Low	7	70	Medium high
3	30	Defrost	8	80	Reheat
4	40	Medium low	9	90	Sauté
5	50	Medium	10	100	High

One-stage cooking

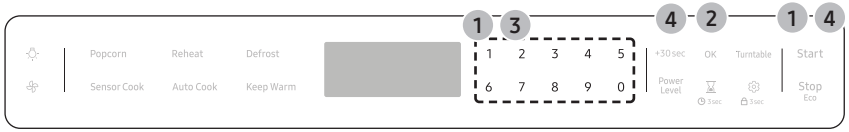

1. In standby mode, touch the **numeric** buttons to set a cooking time. You can enter a time from one second to 99 minutes and 99 seconds.
   To select a time greater than 1 minute, enter the seconds too. (For example, to set a cooking time of 20 minutes, enter **2, 0, 0, 0**.) If you do not need to set the power level, just touch the **Start** button. The microwave will automatically operate at the High power level.
2. If you want to set the power level to a level other than High, touch the **OK** button.
3. Touch the **numeric** buttons that correspond to the power level you want to use.
4. Touch the **Start** button. If you want to add the cooking time, touch **+30 sec** button. You can adjust the cooking time while the microwave oven is operating.

Multi-stage cooking (maximum of 2 stages)

Your oven allows you to set two different cooking stages, each with its own time length and power level. The power level lets you control the heating intensity from Warm to High.

1. Follow steps 1, 2, and 3 from the **One-stage cooking** section.
2. Touch the **OK** button to move to the second stage.
3. Follow steps 1, 2, 3, and 4 from the **One-stage cooking** section.

Popcorn

You can easily cook popcorn using the **Popcorn** button. You do not need to set either the cooking time or the power level.

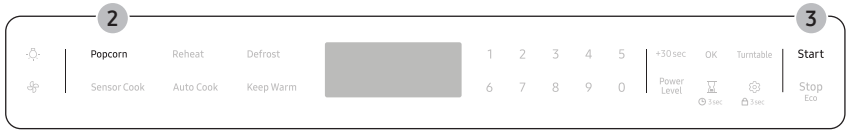

1. Put a bag of unpopped popcorn on the tray.
2. Touch the **Popcorn** button.
3. Touch **Start** button. The microwave oven will automatically operate by sensing the popcorn inside. (3 - 3.5 OZ)

Reheat

You can reheat foods easily using the Reheat button. You do not need to set either the cooking time or the power level.

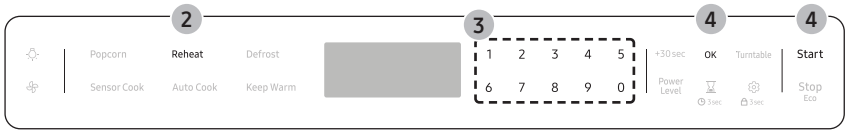

1. Put the food on the tray.
2. Touch the **Reheat** button.
3. Select food item by touching **numeric** buttons (1 - 3).
4. Touch **OK** or **Start** button. The microwave oven will automatically operate by sensing the food inside.

	Food	Amount	Directions
1	Casserole	1 - 4 servings	Cover the plate with a lid or vented plastic wrap. If the food is not as hot as you would like after using the **Sensor Cooking Reheat** function, continue heating using additional time and power. Stir the food once before serving. **Contents:** Casserole, refrigerated foods.
2	Dinner plate	1 - 4 servings	Use only precooked, refrigerated foods. Cover the plate with vented plastic wrap or waxed paper tucked under the plate. If the food is not as hot as you would like after using the **Sensor Cooking Reheat** function, continue heating using additional time and power. **Contents:** 3 - 4 oz meat, poultry or fish (up to 6 oz with bone), ½ cup starch (potatoes, pasta, rice, etc.), ½ cup vegetables (about 3 - 4 oz).
3	Pasta	1 - 4 servings	Cover the plate with a lid or vented plastic wrap. If the food is not as hot as you would like after using the **Sensor Cooking Reheat** function, continue heating using additional time and power. Stir the food once before serving. **Contents:** Pasta - canned spaghetti and ravioli.

Defrost

To thaw frozen foods, enter the weight of the food, and the microwave automatically sets the defrosting time, power level, and standing time.

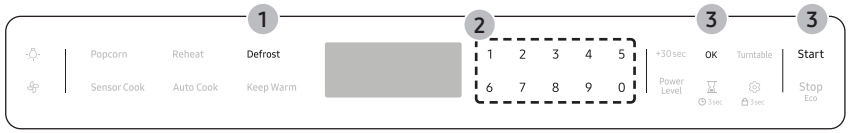

1. Touch the **Defrost** button.
2. Touch the **numeric** buttons to directly enter the weight of the food. (0.1 - 6.0 lbs, 100 - 2700 g. See below table)
3. Touch **OK** or **Start** button.
4. The oven will beep during the defrosting process. Open the oven door, and turn the food over. If you do not turn the food over when the oven beeps, the microwave will continue until the end of cooking time.

Food	Amount	Instructions
Meat	0.1 - 6.0 lbs 100 - 2700 g	Shield the edges with aluminium foil. Flip the meat when the oven beeps. This program is suitable for lamb, pork, steaks, chops, and ground meat. For ground meat, place the meat directly on the turntable tray on wax paper. Do not use an extra tray. Let stand, covered with foil, for 5 - 10 minutes.

NOTE

Check the food when you hear the oven signal. After the final stage, small sections may still be icy; let them stand to continue the thawing process. The food is not defrosted until all ice crystals have melted. Shielding roasts and pieces of steak using small pieces of foil prevents the edges from being cooked before the center of the food has defrosted. Use narrow, flat, smooth strips of aluminum foil to cover edges and thinner sections of the food.

Using your microwave oven

Sensor Cook

The Sensor Cook buttons lets you cook favorite foods using preset power levels and times. If the food is not thoroughly cooked after using Sensor Cook feature, complete the cooking process by cooking the food for an additional amount of time.

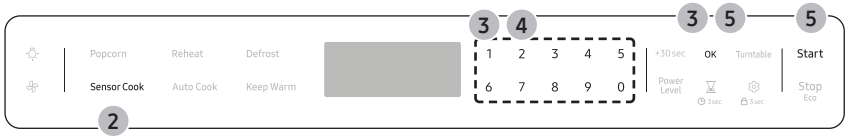

1. Put the food on the tray.
2. Touch the **Sensor Cook** button.
3. Select category of food by touching **numeric** buttons (1 - 4) and then touch **OK** button.
4. Select food item by touching **numeric** buttons if needed.
5. Touch **OK** or **Start** button. The microwave oven will automatically operate by sensing the food inside.

Category		Food	Amount	Instructions
1	Potato	-	1 - 6 potatoes	Pierce each potato several times with a fork. Place on the turntable in a spoke-like fashion. After cooking, let the potatoes stand for 3 - 5 minutes. Let the microwave oven cool for at least 5 minutes before using it again.
2	Pizza	-	1 - 4 slices	Place 1 - 4 pizza slices on a microwave-safe plate with the wide ends of the slices towards the outside edge of the plate. Do not let the slices overlap. Do not cover. Let the microwave oven cool for at least 5 minutes before using it again.

Category		Food		Amount	Instructions
3	Cook	1	Beverage	1 cup	Use a measuring cup or mug and do not cover. Place the beverage in the microwave oven. After heating, stir well. Let the oven cool for at least 5 minutes before using it again.
		2	Chicken breasts	8 - 24 oz	Pierce the chicken breasts 3 times with a knife. Place the chicken breasts on a microwave safe plate and cover with vented plastic wrap. Cook to an internal temperature of 165 °F. Let stand for 5 minutes.
		3	Frozen breakfast	4 - 8 oz	Follow the package instructions for covering and letting stand. Use this button for frozen sandwiches, breakfast entrees, pancakes, waffles, etc. Let the microwave oven cool for at least 5 minutes before using it again.
		4	Frozen dinner	12 - 16 oz	Remove the food from its wrapping and follow the instructions on the box for covering and letting stand. Let the microwave oven cool for at least 5 minutes before using it again.
4	Veggies	1	Fresh vegetables	1 - 4 servings	Place the fresh vegetables in a microwave-safe ceramic, glass, or plastic dish and add 2 - 4 tbs. of water. Cover with a lid or vented plastic wrap. Stir before letting stand. Let the microwave oven cool for at least 5 minutes before using it again.
		2	Frozen vegetables	1 - 4 servings	Place the frozen vegetables in a microwave-safe ceramic, glass, or plastic dish and add 2 - 4 tbs. of water. Cover with a lid or vented plastic wrap to cook. Stir before letting stand for 3 - 5 minutes. Let the microwave oven cool for at least 5 minutes before using it again.

Auto Cook

The Auto Cook button lets you cook favorite foods using preset power levels and times. If the food is not thoroughly cooked after using Auto Cook feature, complete the cooking process by cooking the food for an additional amount of time.

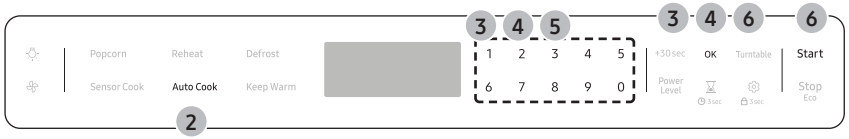

1. Put the food on the tray.
2. Touch the **Auto Cook** button.
3. Select the category of food by touching **numeric** buttons (1 - 5) and then touch **OK** button.
4. Select food item by touching **numeric** buttons and then touch **OK** button.
5. Select the amount of food by touching **numeric** buttons if needed.
6. Touch **OK** or **Start** button to start cooking. The microwave oven will automatically operate by preprogrammed time.

NOTE

You can operate some of Auto Cook items by voice control also. Check **Voice control** on page 17 of this manual.

Category			Food	Amount	Instructions
1	Home Dessert	1	Walnut pound cake	1 serving	**Ingredients** Flour 120 g, Butter 150 g, Black sugar 100 g, Egg 2 pcs., Walnut (Chopped) 50 g, Baking powder 4 g
					1. Combine butter and black sugar in bowl. **2.** Add egg and mix well. **3.** Add a flour, baking powder and keep stirring. **4.** Add a walnut and mix well. **5.** Pour a mixture in greased glass or plastic bowl. **6.** Put the bowl in the microwave oven and select the Walnut Pound Cake under Home Dessert. **7.** After cooking, stand for 2 - 3 minutes.
		2	Banana bread	1 serving (6 pcs.)	**Ingredients** Banana 3 pcs., Pancake mix 120 g, Milk 120 g, Egg 1 pc., Malt syrup 2 tbsp.
					1. Chop the banana. **2.** Combine pancake mix, milk, egg, malt syrup in bowl. **3.** Add banana and mix well. **4.** Pour a mixture in 6 paper cups. **5.** Put paper cups in the microwave oven and select the Banana Bread under Home Dessert. **6.** After cooking, stand for 2 - 3 minutes.
		3	Sponge cake	1 serving	**Ingredients** Flour 170 g, Butter 50 g, Sugar 150 g, Egg 3 pcs., Baking powder 10 g
					1. Combine butter and sugar in bowl. **2.** Add egg and mix well. **3.** Add a flour, baking powder and keep stirring. **4.** Pour a mixture in greased glass or plastic bowl. **5.** Put the bowl in the microwave oven and select the Sponge Cake under Home Dessert. **6.** After cooking, stand for 2 - 3 minutes.

Using your microwave oven

Category			Food	Amount	Instructions
1	Home Dessert	4	Brownie	1 serving	**Ingredients** Flour 90 g, Butter(Melted) ½ cup, Sugar 230 g, Egg 2 pcs., Cocoa power 40 g
				1. Combine butter, beaten eggs, sugar in bowl. **2.** Add a flour, cocoa powder and keep stirring. **3.** Pour a mixture in greased glass or plastic bowl. **4.** Put the bowl in the microwave oven and select the Brownie under Home Dessert. **5.** After cooking, stand for 20 - 30 minutes.	
		5	Egg pudding	1 serving (3 pcs.)	**Ingredients** Milk 250 g, Sugar 40 g, Egg 2 pcs.
				1. Crack the two eggs into a bowl. Lightly beat the egg with a balloon whisk. Don't let the tip of the whisk leave the bottom of the bowl to avoid creating too much foam. **2.** Combine milk, sugar in other bowl. **3.** Add the milk to the beaten egg while whisking the mixture. **4.** Sieve the egg mixture with a fine mesh strainer. Scrape off the bottom of the strainer with a spatula. Remove any foam on the surface with a spoon. **5.** Pour the mixture into custard cups. **6.** Put the cups in the microwave oven and select the Egg Pudding under Home Dessert. **7.** After cooking, refrigerate and serve.	
		6	Chocolate mug cake	1 serving	**Ingredients** Butter 30 g, Sugar 60 g, Egg 1 pc., Heavy cream 40 g, Flour 25 g, Cocoa powder 15 g, Vanilla 1.5 g, Semi-sweet chocolate chips 50 g
				1. Combine the butter, egg and cream together in a mug until well combined. **2.** Add the flour, sugar and keep stirring. **3.** Add the cocoa, vanilla and stir until just combined. **4.** Stir in the chocolate chips. **5.** Put the mug in the microwave oven and select the Chocolate Mug Cake under Home Dessert. **6.** After cooking, stand for 2 - 3 minutes.	

Category			Food	Amount	Instructions
1	Home Dessert	7	Mug cake	1 serving	**Ingredients** Butter 30 g, Sugar 60 g, Egg 1 pc., Flour 50 g, Milk 30 g, Vanilla 6 g, Almond powder 3 g, Baking powder 1.5 g
				1. Combine butter, egg, and milk together in a mug until well combined. **2.** Add flour, sugar, baking powder, and keep stirring. **3.** Add almond powder, vanilla, milk, and stir until just combined. **4.** Put the mug in the microwave oven and select the Mug Cake under Home Dessert. **5.** After cooking, stand for 2 - 3 minute	
		8	Caffe latte	1 serving	**Ingredients** Instant coffee powder 2 g, Water 50 g, Milk 125 g
				1. Mix the coffee powder and water in mug. **2.** Pour milk in other mug. **3.** Put the coffee mixture in the microwave oven and select the Caffe Latte under Home Dessert. **4.** When the beeps, take mug out. **5.** Put the milk in the microwave oven and press the **Start** button. **6.** After cooking, mix all well and serve.	
		9	Green tea latte	1 serving	**Ingredients** Green tea powder 6 g, Sugar 15 g, Milk 250 g
				1. Mix all ingredients in mug. **2.** Put the mug in the microwave oven and select the Green Tea Latte under Home Dessert. **3.** After cooking, mix well and serve.	
		10	Milk tea	1 serving	**Ingredients** Black tea bag 2 pcs., Water 60 g, Milk 125 g
				1. Mix the black tea bag and water in mug. **2.** Pour milk in other mug. **3.** Put the tea mixture in the microwave oven and select the Milk Tea under Home Dessert. **4.** When the beeps, take mug out. **5.** Put the milk in the microwave oven and press the **Start** button. **6.** After cooking, mix all well and serve.	

Category			Food	Amount		Instructions
2	Fit Choice	1	Spinach	1	1 serving	Wash and clean the spinach. Place the spinach in a microwave safe bowl. Add 1 - 4 tablespoons of water (1 Tbsp per serving). Cover during cooking and stir afterwards.
				2	2 servings	
				3	3 servings	
				4	4 servings	
		2	Squash	1	1 - 2 lbs	Slice the squash in half and remove the seeds. Place the squash cut side down in a microwave safe dish and cover with the plastic wrap. If needed, add a ¼ cup of water.
				2	2 - 3 lbs	
		3	Brown rice	1	1 serving	Place 0.5 cups brown rice + 1 cup water for 2 servings or 1 cup brown rice + 2 cups water for 4 servings in a microwave safe bowl. Stir well before and fluff with a fork afterwards. Let stand 5 minutes before serving.
				2	2 servings	
		4	Oatmeal	1	1 package	Follow the package directions for the recommended amount of water needed. Stir well before and afterwards.
				2	2 packages	
		5	Quinoa	1	1 serving	Follow the package directions for the recommended amount of water needed. When the microwave beeps, stir well, and then restart the microwave.
				2	2 servings	

Category			Food	Amount		Instructions
2	Fit Choice	6	Bone-in chicken pieces	1	2 servings	Brush the chicken pieces with oil and seasonings. Arrange chicken pieces in dish with meatiest portions toward the outside edge of dish, and then cover with wax paper. Place the dish on the center of the turntable.
				2	4 servings	
		7	Fresh fish fillet	1	1 serving	Put the fillets (cod, pollack, etc.) in a dish, and then cover with plastic wrap. Place the dish on the center of the turntable.
				2	2 servings	
		8	Fresh salmon fillet	1	1 serving	Put the salmon fillets in a dish, and then cover with plastic wrap. Place the dish on the center of the turntable.
				2	2 servings	
		9	Fresh shrimp	1	2 servings	Put the shrimp in a dish, and then cover with plastic wrap. Place the dish on the center of the turntable.
				2	4 servings	
3	Kids Meal	1	Chicken nuggets (frozen)	1	1 serving	Place a paper towel on a plate and arrange the nuggets in a spokelike fashion on the paper towel. Do not cover. Let stand for 1 minute after heating. **NOTE** Refer to the package directions for the serving size and the amount of food.
				2	2 servings	

Using your microwave oven

Category			Food	Amount		Instructions
3	Kids Meal	2	French fries (frozen)	1	1 serving	Place two paper towels on a microwave-safe plate and arrange the French fries on the towels without letting them overlap. Blot the fries with additional paper towels after removing from the oven. Let stand for 1 minute. **NOTE** Refer to the directions on the packaging for the serving size and the amount of food.
				2	2 servings	
		3	Frozen sandwiches (in crisping sleeve) 9-oz package size	1	1 sandwich	Place the frozen sandwich in a susceptor crisping sleeve (which is in the package) and place on a microwave-safe plate. Remove from the crisping sleeve. Let stand for 2 minutes after heating.
				2	2 sandwiches	
		4	Hot dogs	1	2 hot dogs	Pierce the hot dogs and place them on a plate. When the oven beeps, add the buns and restart the oven. Let stand for1 minute after heating. **NOTE** For the best texture, the buns should be added to the hot dogs when the oven beeps.
				2	4 hot dogs	

Category			Food	Amount		Instructions
4	Snacks	1	Cheese sticks (frozen)	1	5 - 6 pcs (1 Srv.)	Place the cheese sticks on a plate in a spoke-like fashion. Do not cover. Let stand for1 to 2 minutes after heating.
				2	7 - 10 pcs (2 Srvs.)	
		2	Chicken wings	1	5 - 6 oz (2 Srvs.)	Use precooked, refrigerated chicken wings. Place the chicken wings around the plate in a spoke-like fashion and cover with wax paper. Let stand for1 to 2 minutes.
				2	7 - 8 oz (4 Srvs.)	
		3	Nachos	1	1 serving	Place the nachos on a plate without letting them overlap. Sprinkle cheese evenly over them. **Contents:** 2 cups tortilla chips ⅓ cup grated cheese
		4	Potato skins	1	1 cooked potato	Cut the cooked potato into 4 even wedges. Scoop or cut out the potato flesh, leaving about a ¼ in. of skin. Place the skins in a spokelike fashion around the plate. Sprinkle with bacon, onions and cheese. Do not cover. Let stand 1 to 2 minutes.
				2	2 cooked potatoes	

Category			Food	Amount		Instructions
5	Soften/ Melt	1	Melt butter	1	1 stick	Remove the wrapping and cut the butter in half vertically. Place the butter in a dish and cover with wax paper. Stir well after finishing and let stand for 1 - 2 minutes.
				2	2 sticks	
		2	Melt chocolate	1	1 cup chips or 1 square	Place the chocolate chips or squares in a microwave-safe container. When the oven beeps, stir the chocolate and restart the oven. Stir and let stand for1 minute.
		3	Soften butter	1	1 stick (¼ lbs)	Remove wrapping and cut butter in half vertically. Place butter in dish, cover with wax paper.
		4	Soften cream cheese	1	1 package (8 oz)	Unwrap the cream cheese and place on a microwave-safe container. Cut in half vertically. Let stand for 2 minutes.

Keep Warm

You can keep cooked food warm in your microwave oven for up to 99 minutes and 99 seconds.

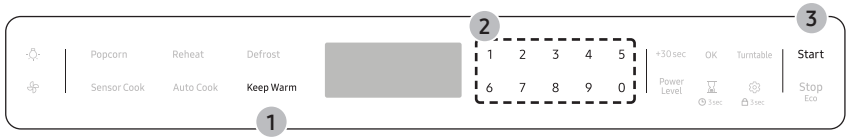

1. Touch the **Keep Warm** button.
2. Enter the warm hold time by touching the **numeric** buttons. If you don`t set the time, your oven will maintain the **Warm Hold** function for 99 minutes and 99 seconds.
3. Touch the **Start** button.

NOTE

- **Keep Warm** operates for up to 99 minutes and 99 seconds.
- The Vent Fan protects the microwave from excess heat.
  It automatically turns on if it senses the overheating. If you have turned the fan on, you may find that you cannot turn it off. The fan will automatically turn off when the internal parts are cool.
- Food that is cooked covered should also be covered during **Keep Warm**.
- Pastry items (pies, turnovers, etc.) should be uncovered during **Keep Warm**.
- Complete meals kept warm on a dinner plate can be covered during **Keep Warm**.

Below are the amounts of food we recommend you apply the Keep Warm function to by Food Type.

Food Type	Recommended Quantity
Liquid	1 - 2 cups
Dry	5 - 10 oz

Cookware guide

To cook food in your microwave oven, microwaves must be able to penetrate the food without being reflected or absorbed by the cookware holding the food.
Consequently, it is important to choose cookware that both allows microwaves to penetrate food and is microwave-safe.
The following lists contain various types of cookware and indicate if and how the cookware should be used in a microwave oven.

Recommended cooking utensils

- **Glass and glass-ceramic bowls and dishes —** Use for heating or cooking.
- **Microwavable plastic wrap —** Use to cover. Leave a small opening for steam to escape and avoid placing it directly on the food.
- **Wax paper —** Use as a cover to prevent spattering.
- **Paper towels and napkins —** Use for short-term heating and covering. They absorb excess moisture and prevent spattering. Do not use recycled paper towels, which may contain metal and can catch fire.
- **Paper plates and cups —** Use for short-term heating at low temperatures. Do not use recycled paper, which may contain metal and can catch fire.
- **Thermometers —** Use only those labeled '**Microwave Safe**' and follow all directions. Check the food in several places. Conventional thermometers may be used once the food has been removed from the oven.

Limited use items

- **Aluminum foil —** Use narrow strips of foil to prevent overcooking of exposed areas. Using too much foil can damage your oven, so be careful.
- **Ceramic, porcelain, and stoneware —** Use these if they are labeled '**Microwave Safe**'. If they are not labeled, test them to make sure they can be used safely. Never use dishes with metallic trim.
- **Plastic —** Use only if labeled '**Microwave Safe**'. Other plastics can melt.
- **Straw, wicker, and wood —** Use only for short-term heating, as they are flammable.

Not recommended

- **Glass jars and bottles —** Regular glass is too thin to be used in a microwave and can shatter.
- **Paper bags —** These are a fire hazard, except for popcorn bags that are designed for microwave use.
- **Styrofoam plates and cups —** These can melt and leave an unhealthy residue on food.
- **Plastic storage and food containers —** Containers such as margarine tubs can melt in the microwave.

Testing utensils

If you are not sure whether a dish is microwave-safe or not, you can perform this test:

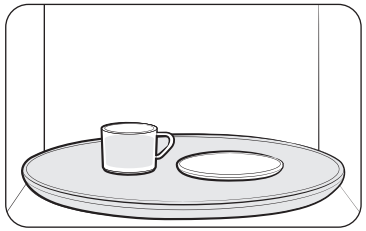

1. Fill a 1 cup glass measuring cup with water and put it inside your oven, next to the dish you want to test.
2. Set the microwave to 1 minute using the **numeric** buttons, and then press the **Start** button. This will heat the glass and dish for one minute at High power.

When the microwave stops, the water should be warm and the dish you are testing should be cool. If the dish is warm, then it is absorbing microwave energy and is not acceptable for use in the microwave.

Cooking guide

Microwave energy actually penetrates food and is attracted to and absorbed by the water, fat, and sugar molecules in the food. The microwaves cause the molecules in the food to move rapidly. The rapid movement of these molecules creates friction and the resulting heat cooks the food.

Cooking techniques

Stirring

Stir foods such as casseroles and vegetables while cooking to distribute heat evenly. Food at the outside of the dish absorbs more energy and heats more quickly, so stir from the outside to the center. The oven will turn off when you open the door to stir your food.

Arrangement

Arrange unevenly shaped foods, such as chicken pieces or chops, with the thicker, meatier parts toward the outside of the turntable where they will receive more microwave energy. To prevent overcooking, place thin or delicate parts toward the center of the turntable.

Shielding

Shield food with narrow strips of aluminum foil to prevent overcooking. Areas that need shielding include poultry wing-tips, the ends of poultry legs, and the corners of square baking dishes. Use only small amounts of aluminum foil. Larger amounts can damage your oven.

Turning

Turn foods over midway through cooking to expose all parts to microwave energy. This is especially important with large items such as roasts.

Standing

Food cooked in the microwave builds up internal heat and continues to cook for a few minutes after the oven stops. Let food stand to complete cooking, especially food such as roasts and whole vegetables. Roasts need this time to complete cooking in the center without overcooking the outer areas. All liquids, such as soup or hot chocolate, should be shaken or stirred when cooking is complete. Let liquids stand a moment before serving. When heating baby food, stir well and test the temperature before serving.

Adding Moisture

Microwave energy is attracted to water molecules. Food that is uneven in moisture content should be covered or allowed to stand so that the heat disperses evenly. Add a small amount of water to dry food to help it cook.

Venting

After covering a dish with plastic wrap, vent the plastic wrap by turning back one corner so excess steam can escape.W

Cooking guide

General cooking recommendations

- Dense foods, such as potatoes, take longer to heat than lighter foods. Food with a delicate texture should be heated at a low power level to prevent it from becoming tough.
- Altitude and the type of cookware you are using can affect cooking time. When trying a new recipe, use the minimum cooking time and check the food occasionally to prevent overcooking.
- Food with a non-porous skin such as potatoes or hot dogs should be pierced to prevent bursting.
- Frying with oil or fat is not recommended. Fat and oil can suddenly boil over and cause severe burns.
- Some ingredients heat faster than others. For example, the jelly inside a jelly doughnut will be hotter than the dough. Keep this in mind to avoid burns.
- Home canning in the microwave oven is not recommended because all harmful bacteria may not be destroyed by the microwave heating process.
- Although microwaves do not heat the cookware, the heat from the food is often transferred to the cookware. Always use pot holders when removing food from the microwave and instruct children to do the same.
- Making candy in the microwave is not recommended as candy can heat to very high temperatures. Keep this in mind to avoid injury.

Guide for cooking eggs in your microwave

- Never cook eggs in the shell and never warm hard-cooked eggs in the shell. They can explode.
- Always pierce whole eggs to keep them from bursting.
- Cook eggs just until set. They become tough if overcooked.

Guide for cooking vegetables in your microwave

- Vegetables should be washed just before cooking. Often, no extra water is needed. If you are cooking dense vegetables such as cubed potatoes, carrots, or green beans, add about ¼ cup water.
- Small vegetables (sliced carrots, peas, lima beans, etc.) will cook faster than larger ones.
- Whole vegetables, such as potatoes, acorn squash, or corn on the cob, should be arranged in a circle on the turntable before cooking. They will cook more evenly if turned over after half the cooking time.
- Always place vegetables like asparagus and broccoli with the stem ends pointing towards the edge of the dish and the tips toward the center.
- When cooking cut vegetables, always cover the dish with a lid or vented microwavable plastic wrap.
- Whole, unpeeled vegetables such as potatoes, squash, eggplant, etc., should have their skin pricked in several spots before cooking to prevent them from bursting.
- For more even cooking, stir or rearrange whole vegetables halfway through the cooking time.
- Generally, the denser the food, the longer the standing time. (Standing time refers to the time necessary for dense, large foods and vegetables to finish cooking after they come out of the oven.) A baked potato can stand on the counter for five minutes before cooking is completed, while a dish of peas can be served immediately.

Cleaning and maintaining your microwave oven

Keeping your microwave oven clean improves its performance, wards off unnecessary repairs, and lengthens its life.

Cleaning the exterior

It's best to clean spills on the outside of your microwave oven as they occur. Use a soft cloth and warm, soapy water. Rinse and dry.

⚠ CAUTION

Do not get water into the vents. Never use abrasive products or chemical solvents such as ammonia or alcohol as they can damage the appearance of your microwave.

⚠ WARNING

Unplug the microwave plug before cleaning.

Cleaning under your microwave oven

Regularly clean grease and dust from the bottom of your microwave using a solution of warm water and detergent.

Cleaning the control panel

Wipe with a damp cloth and dry thoroughly. Do not use cleaning sprays, large amounts of soap and water, abrasives, or sharp objects on the panel as it is easily damaged.

Cleaning the door and door seals

Always ensure that the door seals are clean and that the door closes properly. Take particular care when cleaning the door seals to ensure that no particles accumulate and prevent the door from closing correctly. Wash the glass door with very mild soap and water. Be sure to use a soft cloth to avoid scratching.

NOTE

If steam accumulates inside or outside the oven door, wipe with a soft cloth. Steam can accumulate when you operate the oven when humidity is high and in no way indicates microwave leakage.

Cleaning the interior

⚠ CAUTION

To avoid injury, ensure that the microwave oven has cooled down before cleaning it.

⚠ CAUTION

Remove the glass tray from the oven when cleaning the oven or tray. To prevent the tray from breaking, handle it with care and do not put it in water immediately after cooking. Wash the tray carefully in warm sudsy water or in the dishwasher.

Cleaning the turntable and roller rings

Clean the roller rings periodically and wash the turntable as required. The turntable can be washed safely in your dishwasher.

Cleaning and maintaining your microwave oven

Storing and repairing your microwave oven

If you need to store your microwave oven for a short or extended period of time, choose a dust-free, dry location. Dust and dampness may adversely affect the functionality of the microwave parts.

WARNING

Do not repair, replace, or service any part of your microwave oven yourself. Allow only a qualified service technician to perform repairs. If the oven is faulty and needs servicing, or you are in doubt about its condition, unplug the oven from the power outlet and contact your nearest service center.
Do not use the oven if the microwave oven is damaged, in particular, if the door or door seals are damaged or the door does not close properly. This can be caused by a broken hinge, a worn out seal or distorted/bent casing.
Do not remove the oven from its casing.
This microwave oven is for home use only and is not intended for commercial use.

Replacing the cooktop/night light

When replacing the cooktop/night light, make sure that you are wearing gloves to avoid injury from the heat of the lamp.

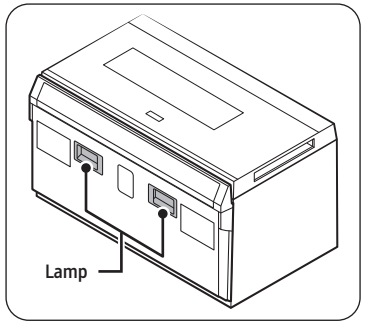

1. Unplug the oven or turn off the power at the main power supply.
2. Remove the screw from the light cover and lower the cover.
3. Disconnect the wire connectors.
4. Remove the screw securing the LED lamp board.
5. Replace the LED lamp board.

NOTE

To purchase a new LED lamp board, visit an authorized Samsung service center or call 1-800-SAMSUNG (726-7864).

Replacing the oven light

When replacing the oven light, make sure that you are wearing gloves to avoid injury from the heat of the bulb.

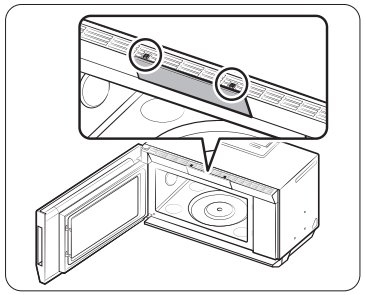

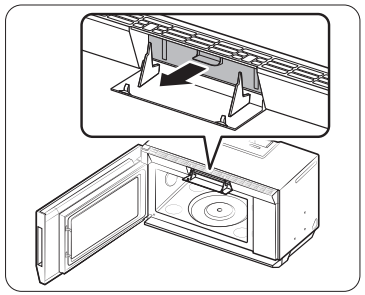

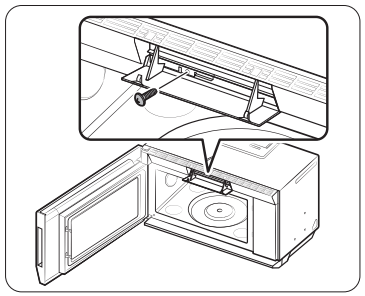

1. Unplug the oven or turn off the power at the main power supply.
2. Open the door.
3. Press the hook above the grille to open the front of it.
4. If you use the front vent, remove the cover filter by pulling it out gently.
5. Remove the charcoal filter, if present.
6. Remove the screw securing the lamp cover.
7. Remove the bulb by pulling it out gently.
8. Replace the bulb with a 20 watt halogen bulb.
9. Replace the bulb holder.
10. Close the grille front.
11. Plug the oven in or turn on the power at the main power supply. Reset the clock.

Cleaning the grease filter

Your microwave oven has reusable grease filter. The grease filter should be removed and cleaned at least once a month or as required.
To order a new grease filter, contact Samsung Parts at 1-800-627-4368 or your Samsung dealer. You can also order online at www.samsungparts.com.

⚠ WARNING

To avoid the risk of personal injury or property damage, do not operate the oven hood without the filter in place.

Grease Filter Bottom

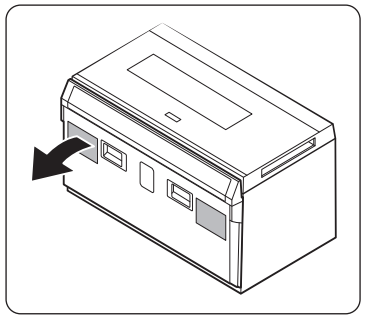

1. To remove the Grease Filter Bottom, slide it to the left (or right) using the tab.

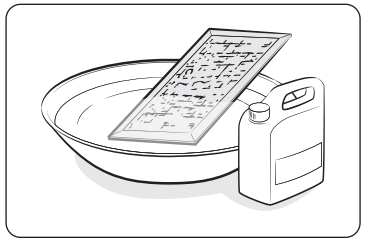

2. Soak the grease filter in hot water and a mild soap. Rinse well and shake to dry. Brushing the filter lightly can remove embedded dirt.

⚠ WARNING

Do not use ammonia or put the grease filter in the microwave oven. The aluminum will darken.

3. To re-install the filter, slide it into the frame slot on the left (or right), and then push it upwards and to the right (or left) to lock it.

Grease Filter Front

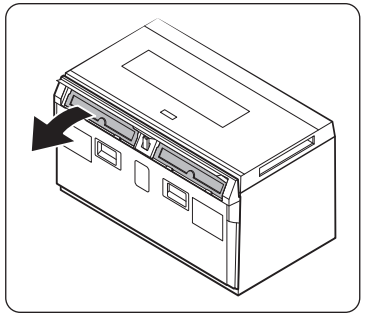

1. Touch and hold the **Keep Warm** and **numeric button 6** for 3 seconds to open the Flip.
2. To remove the Grease Filter Front, push it up.

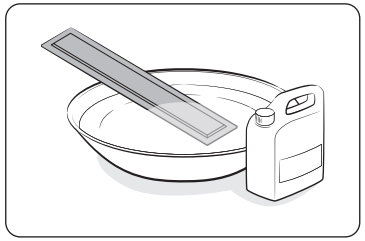

3. Soak the grease filter in hot water and a mild soap. Rinse well and shake to dry. Brushing the filter lightly can remove embedded dirt.

⚠ WARNING

Do not use ammonia or put the grease filter in the microwave oven. The aluminum will darken.

4. To re-install the filter, push it up from the bottom and put it in a slot, and then push it downwards to lock it.
5. Touch and hold the **Keep Warm** and **numeric button 6** for 3 seconds to close the Flip.

Replacing the charcoal filter

If your oven is vented to the inside, the charcoal filter should be replaced every 6 to 12 months and more often if necessary. The charcoal filter cannot be cleaned. To order a new charcoal filter, contact the Parts Department at 1-800-627-4368 or your Samsung dealer. You can also order online at www.samsungparts.com

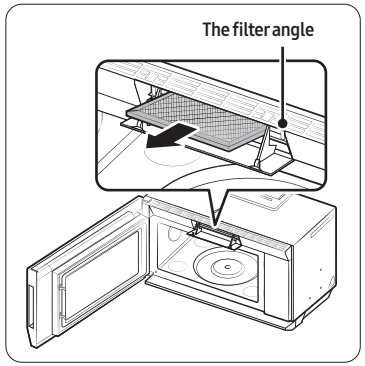

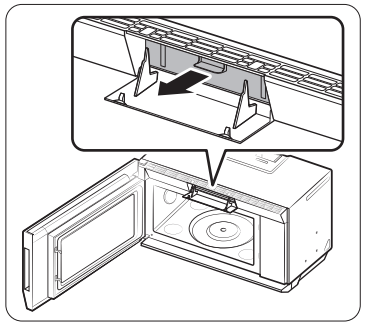

1. Unplug the oven or turn off the power at the main power supply.
2. Open the door.
3. Press the hook above the grille to open the front of it.
4. If you use the front vent, remove the cover filter by pulling it out gently.
5. Push the hook and remove the old filter.

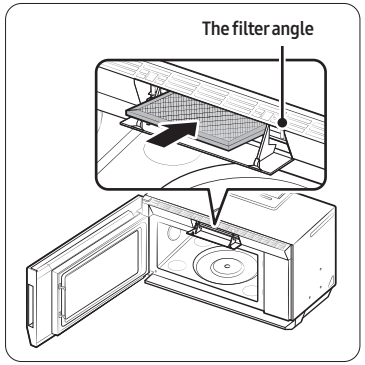

6. Slide a new charcoal filter into place. The filter should rest at the angle shown.
7. Close the grille front. Plug the oven in or turn on the power at the main power supply. Reset the clock.

Troubleshooting

Check points

If you encounter a problem with your oven, first check the tables starting below and try the recommendations. If a problem persists, or if an information code keeps appearing on the display, contact a local Samsung service center.

Problem	Cause	Action
General		
The buttons cannot be pressed properly.	Foreign matter may be caught between the buttons.	Remove the foreign matter and try again.
	For touch models: Moisture is on the exterior.	Wipe the moisture from the exterior.
	The Child Lock is activated.	Deactivate the Child Lock.
The time is not displayed.	Power is not supplied.	Make sure power is supplied. Confirm the microwave is plugged in. Check your fuses or circuit breakers.
	The Eco (power-saving) function is set.	Turn off the Eco function.
The oven does not work.	Power is not supplied.	Make sure power is supplied. Confirm the microwave is plugged in. Check your fuses or circuit breakers.
	The door is open.	Close the door and try again.
	The door open safety mechanisms are covered by foreign matter.	Remove the foreign matter and try again.

Problem	Cause	Action
The oven stops while in operation.	The user has opened the door to turn food over.	After turning over the food, press the **Start** button again to start operation.
The power turns off during operation.	The oven has been cooking for an extended period of time.	After the oven has cooked for an extended period of time, let the oven cool.
	The cooling fan is not working.	Listen for the sound of the cooling fan.
	Trying to operate the oven without food inside.	Put food in the oven.
	There is not enough ventilation space around the oven.	There are intake/exhaust outlets on the front and rear of the oven for ventilation. Check the installation guide and make sure that the microwave is far enough away from walls and cabinets for proper ventilation.
	Several appliances or devices are plugged into the same outlet.	Unplug all other appliances or devices from the outlet.
There is no power to the oven.	Power is not supplied.	Make sure power is supplied. Confirm the microwave is plugged in. Check your fuses or circuit breakers.
There is a popping sound during operation, and the oven doesn't work.	Cooking food in a sealed container or using a container with a a tight lid.	Do not cook food in sealed containers or in containers with tight lids. Expanding steam from the cooking food can cause the containers to burst or the lids to pop off.

Troubleshooting

Problem	Cause	Action
The oven exterior gets too hot during operation.	There is not enough ventilation space around the oven.	There are intake/exhaust outlets on the front and rear of the oven for ventilation. Check the installation guide and make sure that the microwave is far enough away from walls and cabinets for proper ventilation.
	Objects are on top of the oven.	Remove all objects on the top of the oven.
The door cannot be opened properly.	Food residue is stuck between the door and oven interior.	Clean the oven the door.
The oven does not heat.	The oven may not work if too much food is being cooked or improper cookware is being used.	To test the oven, put one cup of water in a microwave-safe container, put the container in the oven, and then run the microwave for1 - 2 minutes to check whether the water is heated. If the water is heated, reduce the amount of food and start the function again. Use a cooking container with a flat bottom.

Problem	Cause	Action
Heating is weak or slow.	The oven may not work if too much food is being cooked or improper cookware is being used.	To test the oven, put one cup of water in a microwave-safe container, put the container in the oven, and then run the microwave for1 - 2 minutes to check whether the water is heated. If the water is heated, reduce the amount of food and start the function again. Use a cooking container with a flat bottom.
The warm function does not work.	The oven may not work if too much food is being warmed or improper cookware is being used.	To test the oven, put one cup of water in a microwave-safe container, put the container in the oven, and then run the microwave for1 - 2 minutes to check whether the water is heated. If the water is heated, reduce the amount of food and start the function again. Use a cooking container with a flat bottom.

Problem	Cause	Action
The thaw function does not work.	The oven may not work if too much food is being thawed or improper cookware is being used.	To test the oven, put one cup of water in a microwave-safe container, put the container in the oven, and then run the microwave for1 - 2 minutes to check whether the water is heated. If the water is heated, reduce the amount of food and start the function again. Use a cooking container with a flat bottom.
The interior light is dim or does not turn on.	The door has been left open for a long time.	The interior light may automatically turn off when the Eco function operates. Close and reopen the door or press the **Stop** button.
	The interior light is covered by foreign matter.	Clean the inside of the oven and check again.
A beeping sound occurs during cooking.	If the Auto Cook function is being used, this beeping sound means it's time to turn over the food.	After turning over the food, press the **Start** button again to restart operation.
The oven is not level.	The oven is installed on an uneven surface.	Make sure the oven is installed on flat, stable surface.
There are sparks during cooking.	Metal containers are used during cooking or thawing.	Do not use metal containers.
When power is connected, the oven immediately starts to work.	The door is not properly closed.	Close the door and check again.

Problem	Cause	Action
There is electricity coming from the oven.	The power source or power outlet is not properly grounded.	Make sure the power source and power outlet are properly grounded.
There is water dripping.	Water or steam may be generated by the cooking or defrosting process, depending on the food. This is not an oven malfunction.	Let the oven cool and then wipe with a dry dish towel.
There is steam coming through a crack in the door.	Water or steam may be generated by the cooking or defrosting process, depending on the food. This is not an oven malfunction.	Let the oven cool and then wipe with a dry dish towel.
There is water left in the oven.	Water or steam may be generated by the cooking or defrosting process, depending on the food. This is not an oven malfunction.	Let the oven cool and then wipe with a dry dish towel.
The brightness inside the oven varies.	Changes in brightness reflect changes in power output. Power output changes depending on the functions in use.	Power output changes during cooking are not malfunctions.
Cooking is finished, but the cooling fan is still running.	To ventilate the oven, the cooling fan continues to run for about 3 minutes after cooking is complete.	This is not an oven malfunction.
Pressing the **Start** button operates the oven.	This happens when the oven is not operating.	The microwave oven is designed to start operating when you press the **Start** button if it was not operating.

Troubleshooting

Problem	Cause	Action
Turntable		
While turning, the turntable comes out of place or stops turning.	There is no roller ring, or the roller ring is not properly in place.	Install the roller ring properly and then try again.
The turn table drags while turning.	The roller ring is not properly in place, there is too much food, or the container is too large and touches the inside of the microwave.	Install the roller ring properly. Adjust the amount of food. Do not use containers that are too large.
The turn table rattles while turning and is noisy.	Food residue is stuck to the bottom of the oven.	Remove any food residue stuck to the bottom of the oven.

Information codes

If the microwave oven fails to operate, you may see an information code on the display. Check the table below for the code, and then follow the directions.

Code	Description	Action
C-10	The GAS sensor is open.	Unplug the power cord of the oven, and then contact a local Samsung service center.
	The GAS sensor is shorted.	
C-F0	The microwave has sensed an internal communications failure.	Unplug the power cord of the oven, and then contact a local Samsung service center.
C-F1	Only occurs when EEPROM Read or Write is not working.	Unplug the power cord of the oven, and contact a local Samsung Customer Care Center.
C-F2	A touch button has malfunctioned.	Press **Stop**, and then try the button again.
C-d0	Control buttons are touched over10 seconds.	Clean the keys and check if there is water on the surface around key. If it appears again, turn off the microwave oven, let it sit for more than 30 seconds, and then try setting again. If this code re-appears, call your local Samsung Customer Care Center.

Appendix

Specifications

Model	ME80H2160RAA	ME80H2160RAC
Oven Cavity	2.1 cu ft	
Controls	10 power level, including Defrost	
Timer	99 minutes, 99 seconds	
Power Source	120 VAC, 60 Hz	
Power Consumption	1700 W Microwave	1500 W Microwave
Microwave Power Output	1000 W	950 W
Cook Top Light	LED lamp (2 EA)	
Oven Light	50 W halogen lamp	
Oven Cavity Dimensions (inches)	22 $^{1}/_{8}$" (W) x 10 $^{13}/_{16}$" (H) x 14 $^{7}/_{8}$" (D)	
Outside Dimensions (inches)	29 $^{7}/_{8}$" (W) x 17 $^{7}/_{8}$" (H) x 16 $^{29}/_{64}$" (D)	
Shipping Dimensions (inches)	33 $^{3}/_{16}$" (W) x 20 $^{15}/_{64}$" (H) x 20 $^{5}/_{16}$" (D)	
Net/Shipping Weight	58.9 lbs / 65.5 lbs (26.7 kg / 29.7 kg)	

Warranty (USA)

Samsung MICROWAVE OVEN

LIMITED WARRANTY TO ORIGINAL PURCHASER WITH PROOF OF PURCHASE

This Samsung brand product, as supplied and distributed by Samsung ELECTRONICS AMERICA, INC. (Samsung) and delivered new, in the original carton to the original consumer purchaser, is warranted by Samsung against manufacturing defects in materials or workmanship for the limited warranty period, starting on the date of delivery to the original consumer purchaser, of:

One (1) Year Parts and Labor
Ten (10) Years Magnetron Part (Part Only)

This limited warranty is valid only on products purchased and used in the United States that have been installed, operated, and maintained according to the instructions attached to or furnished with the product. To receive warranty service, the purchaser must contact Samsung at the address or phone number provided below for problem determination and service procedures. Warranty service can only be performed by a Samsung authorized service center. The original dated bill of sale and/or proof of delivery must be presented upon request as proof of purchase to Samsung or Samsung's authorized service center to receive warranty service.

Samsung will provide in-home service within the contiguous United States during the warranty period at no charge, subject to availability of Samsung authorized servicers within the customer's geographic area. If in-home service is not available, Samsung may elect, at its option, to provide transportation of the product to and from an authorized service center. If the product is located in an area where service by a Samsung authorized servicer is not available, you may be responsible for a trip charge or required to bring the product to a Samsung authorized service center for service.

To receive in-home service, product must be unobstructed and accessible to the service agent.

During the applicable warranty period, a product will be repaired, replaced, or the purchase price refunded, at the sole option of Samsung. Samsung may use new or reconditioned parts in repairing a product, or replace the product with a new or reconditioned product. Replacement parts and products are warranted for the remaining portion of the original product's warranty or ninety (90) days, whichever is longer. All replaced parts and products are the property of Samsung and you must return them to Samsung.

Warranty (USA)

This limited warranty covers manufacturing defects in materials or workmanship encountered in normal household, noncommercial use of this product and shall not cover the following: damage that occurs in shipment, delivery, installation, and uses for which this product was not intended; damage caused by unauthorized modification or alteration of the product; product where the original factory serial numbers have been removed, defaced, changed in any way, or cannot be readily determined; cosmetic damage including scratches, dents, chips, and other damage to the product's finishes; damage caused by abuse, misuse, overheating due to overcooking, glass tray or turntable, pest infestations, accident, fire, floods, or other acts of nature or God; damage caused by use of equipment, utilities, services, parts, supplies, accessories, applications, installations, repairs, external wiring or connectors not supplied or authorized by Samsung; damage caused by incorrect electrical line current, voltage, fluctuations and surges; damage caused by failure to operate and maintain the product according to instructions; in-home instruction on how to use your product; service to correct installation not in accordance with electrical or plumbing codes or correction of household electrical or plumbing (i.e., house wiring, fuses, or water inlet hoses); and reduced magnetron power output related to normal aging.

The cost of repair or replacement under these excluded circumstances shall be the customer's responsibility.

Visits by an authorized servicer to explain product functions, maintenance or installation are not covered by this limited warranty. Please contact Samsung at the number below for assistance with any of these issues.

Samsung will charge a repair fee for replacing an accessory or repairing cosmetic damage if the damage to the unit and/or damage to or loss of the accessory was caused by the customer. Items this covers include:

- Dented, scratched, or broken door, handle, out-panel, or control panel
- Broken or lost tray, guide roller, coupler, filter, or wire rack

Parts that Samsung has determined can be replaced by the user may be sent to the customer for installation. In Samsung's discretion, an authorized servicer can be dispatched to perform such installation.

EXCLUSION OF IMPLIED WARRANTIES

IMPLIED WARRANTIES, INCLUDING THE IMPLIED WARRANTIES OF MERCHANTABILITY OR FITNESS FOR A PARTICULAR PURPOSE, ARE LIMITED TO ONE YEAR OR THE SHORTEST PERIOD ALLOWED BY LAW. Some states do not allow limitations on how long an implied warranty lasts, so the above limitations or exclusions may not apply to you. This warranty gives you specific rights, and you may also have other rights, which vary from state to state.

LIMITATION OF REMEDIES

YOUR SOLE AND EXCLUSIVE REMEDY IS PRODUCT REPAIR, PRODUCT REPLACEMENT, OR REFUND OF THE PURCHASE PRICE AT Samsung's OPTION, AS PROVIDED IN THIS LIMITED WARRANTY. Samsung SHALL NOT BE LIABLE FOR SPECIAL, INCIDENTAL OR CONSEQUENTIAL DAMAGES, INCLUDING BUT NOT LIMITED TO TIME WAY FROM WORK, HOTELS AND/OR RESTAURANT MEALS, REMODELING EXPENSES, LOSS OF REVENUE OR PROFITS, FAILURE TO REALIZE SAVINGS OR OTHER BENEFITS REGARDLESS OF THE LEGAL THEORY ON WHICH THE CLAIM IS BASED, AND EVEN IF Samsung HAS BEEN ADVISED OF THE POSSIBILITY OF SUCH DAMAGES. Some states do not allow exclusion or limitation of incidental or consequential damages, so the above limitations or exclusions may not apply to you. This warranty gives you specific rights, and you may also have other rights, which vary from state to state.

Samsung does not warrant uninterrupted or error-free operation of the product. No warranty or guarantee given by any other person, firm, or corporation with respect to this product shall be binding on Samsung.

To obtain warranty service, please contact Samsung at:

Samsung Electronics America, Inc.
85 Challenger Road
Ridgefield Park, NJ 07660
1-800-SAMSUNG (726-7864) and www.samsung.com/us/support

Warranty (CANADA)

Samsung over-the-range (otr) microwave oven

Limited warranty to original purchaser

This Samsung brand product, as supplied and distributed by Samsung Electronics Canada, Inc. (Samsung) and delivered new, in the original carton to the original consumer purchaser, is warranted by Samsung against manufacturing defects in materials and workmanship for a limited warranty period of:

ONE (1) YEAR PARTS AND LABOR,
FIVE (5) YEARS PARTS WARRANTY FOR MAGNETRON

Samsung will charge a repair fee for replacing an accessory or repairing a cosmetic defect if the damage to the unit and/or damage to or loss of the accessory was caused by the customer. Items this stipulation covers include:

- A Dented, Scratched, or Broken Door, Handle, Out-Panel, or Control Panel
- A Broken or missing Tray, Guide Roller, Coupler, Filter, or Wire Rack

User Replaceable Parts may be sent to the customer for unit repair. If necessary, a Service Engineer can be dispatched to perform service.

This limited warranty begins on the original date of purchase, and is valid only on products purchased and used in the United States. To receive warranty service, the purchaser must contact Samsung for problem determination and service procedures. Warranty service can only be performed by a Samsung authorized service center. The original dated bill of sale must be presented upon request as proof of purchase to Samsung or Samsung's authorized service center.

Samsung will repair this product or replace it if cannot repair it, at our option and at no charge as stipulated herein, with new or reconditioned parts or products if found to be defective during the limited warranty period specified above. All replaced parts and products become the property of Samsung and must be returned to Samsung. Replacement parts and products assume the remaining original warranty, or ninety (90) days, whichever is longer.

In-home service will be provided during the warranty labor period subject to availability within the contiguous United States. In-home service is not available in all areas. To receive in-home service, the product must be unobstructed and accessible to service personnel.

If during in-home service repair can not be completed, it may be necessary to remove, repair and return the product. If in-home service is unavailable, Samsung may elect, at our option, to provide for transportation of our choice to and from a Samsung authorized service center. Otherwise, transportation to and from the Samsung authorized service center is the responsibility of the purchaser.

This limited warranty covers manufacturing defects in materials and workmanship encountered in normal, noncommercial use of this product and shall not apply to the following, including, but not limited to: damage which occurs in shipment; delivery and installation; applications and uses for which this product was not intended; altered product or serial numbers; cosmetic damage or exterior finish; accidents, abuse, neglect, fire, water, lightning or other acts of nature; use of products, equipment, systems, utilities, services, parts, supplies, accessories, applications, installations, repairs, external wiring or connectors not supplied or authorized by Samsung which damage this product or result in service problems; incorrect electrical line voltage, fluctuations and surges; customer adjustments and failure to follow operating instructions, cleaning, maintenance and environmental instructions that are covered and prescribed in the instruction book; problems caused by pest infestations, and overheating or overcooking by user; glass tray or turntable; reduced magnetron power output related to normal aging. Samsung does not warrant uninterrupted or error-free operation of the product.

Warranty (CANADA)

THERE ARE NO EXPRESS WARRANTIES OTHER THAN THOSE LISTED AND DESCRIBED ABOVE, AND NO WARRANTIES WHETHER EXPRESS OR IMPLIED, INCLUDING, BUT NOT LIMITED TO, ANY IMPLIED WARRANTIES OF MERCHANTABILITY OR FITNESS FOR A PARTICULAR PURPOSE, SHALL APPLY AFTER THE EXPRESS WARRANTY PERIODS STATED ABOVE, AND NO OTHER EXPRESS WARRANTY OR GUARANTY GIVEN BY ANY PERSON, FIRM OR CORPORATION WITH RESPECT TO THIS PRODUCT SHALL BE BINDING ON Samsung. Samsung SHALL NOT BE LIABLE FOR LOSS OF REVENUE OR PROFITS, FAILURE TO REALIZE SAVINGS OR OTHER BENEFITS, OR ANY OTHER SPECIAL, INCIDENTAL OR CONSEQUENTIAL DAMAGES CAUSED BY THE USE, MISUSE OR INABILITY TO USE THIS PRODUCT, REGARDLESS OF THE LEGAL THEORY ON WHICH THE CLAIM IS BASED, AND EVEN IF Samsung HAS BEEN ADVISED OF THE POSSIBILITY OF SUCH DAMAGES. NOR SHALL RECOVERY OF ANY KIND AGAINST Samsung BE GREATER IN AMOUNT THAN THE PURCHASE PRICE OF THE PRODUCT SOLD BY Samsung AND CAUSING THE ALLEGED DAMAGE. WITHOUT LIMITING THE FOREGOING, PURCHASER ASSUMES ALL RISK AND LIABILITY FOR LOSS, DAMAGE OR INJURY TO PURCHASER AND PURCHASER'S PROPERTY AND TO OTHERS AND THEIR PROPERTY ARISING OUT OF THE USE, MISUSE OR INABILITY TO USE THIS PRODUCT SOLD BY Samsung NOT CAUSED DIRECTLY BY THE NEGLIGENCE OF Samsung. THIS LIMITED WARRANTY SHALL NOT EXTEND TO ANYONE OTHER THAN THE ORIGINAL PURCHASER OF THIS PRODUCT, IS NONTRANSFERABLE AND STATES YOUR EXCLUSIVE REMEDY.

Some states do not allow limitations on how long an implied warranty lasts, or the exclusion or limitation of incidental or consequential damages, so the above limitations or exclusions may not apply to you. This warranty gives you specific legal rights, and you may also have other rights which vary from state to state.

To obtain warranty service, please contact Samsung at:

1-800-SAMSUNG (726-7864) or www.samsung.com/ca/support (English)

www.samsung.com/ca_fr/support (French)

Memo

Memo

SAMSUNG

Scan this with your smartphone

Scan the QR code* or visit
www.samsung.com/spsn
to view our helpful
How-to Videos and Live Shows
* Requires reader to be installed on your smartphone

Please be advised that the Samsung warranty does NOT cover service calls to explain product operation, correct improper installation, or perform normal cleaning or maintenance.

QUESTIONS OR COMMENTS?

COUNTRY	CALL	OR VISIT US ONLINE AT
U.S.A Consumer Electronics	1-800-SAMSUNG (726-7864)	www.samsung.com/us/support
CANADA	1-800-SAMSUNG (726-7864)	www.samsung.com/ca/support (English) www.samsung.com/ca_fr/support (French)

ME80H2160R**-00