SAMSUNG

SAMSUNG LASER PRINTER

User's Guide

ML-2550 Series

For UK customers:

To reorder your consumables
Call 0800 3164060

For Technical Assistance
Call 0870 2420303

This manual is provided for information purposes only. All information included herein is subject to change without notice. Samsung Electronics is not responsible for any changes, direct or indirect, arising from or related to use of this manual.

© 2003 Samsung Electronics Co., Ltd. All rights reserved.

- ML-2550, ML-2551N, ML-2552W and Samsung logo are trademarks of Samsung Electronics Co., Ltd.
- PCL and PCL 6 are trademarks of Hewlett-Packard company.
- Centronics is a trademark of Centronics Data Computer Corporation.
- IBM and IBM PC are trademarks of International Business Machines Corporation.
- Apple, AppleTalk, TrueType, LaserWriter and Macintosh are trademarks of Apple Computer, Inc.
- Microsoft, Windows, Windows 9x, Windows Me, Windows 2000, Windows NT and Windows XP are registered trademarks of Microsoft Corporation.
- PostScript 3 is a trademark of Adobe System, Inc.
- UFST® and MicroType™ are registered trademarks of Agfa division of Bayer Corp.
- All other brand or product names are trademarks of their respective companies or organisations.

CONTENTS

Chapter 1: INTRODUCTION

Special Features 1.2

Printer Components 1.5
- Front View 1.5
- Rear View 1.6

Chapter 2: SETTING UP YOUR PRINTER

Unpacking 2.2
- Selecting a Location 2.3

Installing the Toner Cartridge 2.4

Loading Paper 2.6
- Changing the Paper Size in the Tray 2.8

Connecting a Printer Cable 2.10
- For Local Printing 2.10
- For Network Printing 2.12

Turning the Printer On 2.13

Printing a Demo Page 2.14

Changing the Display Language 2.14

Installing Printer Software 2.15
- Printer Driver Features 2.16
- Installing Printer Software in Windows 2.17
- Installing the USB Driver in Windows 98/Me 2.20

Chapter 3: USING THE CONTROL PANEL

Understanding the Control Panel 3.2
- Display 3.2
- Buttons 3.3

Using Control Panel Menus 3.5
- Accessing Control Panel Menus 3.5
- Overview of Control Panel Menus 3.6
- Information Menu 3.7

Paper Menu 3.7
Layout Menu 3.10
Graphics Menu 3.12
Printer Menu 3.13
Setup Menu 3.13
PCL Menu 3.16
PostScript Menu 3.17
EPSON Menu 3.18
Network Menu 3.19

Chapter 4: USING PRINT MATERIALS

Choosing Paper and Other Materials 4.2
Sizes and Capacities 4.3
Guidelines for Paper and Special Materials 4.4
Selecting the Output Location 4.5
Printing to the Top Output Tray (Face down) 4.5
Printing to the Rear Output Tray (Face up) 4.6
Loading Paper 4.7
Using the Tray1 or the Optional Tray2 ..... 4.8
Using the Multi-Purpose Tray 4.8
Using the Manual Feed Mode 4.12
Printing on Envelopes 4.14
Printing on Labels 4.17
Printing on Transparencies 4.19
Printing on Preprinted Paper 4.21
Printing on Card Stock or Custom-sized Materials 4.22

Chapter 5: PRINTING TASKS

Printing a Document 5.2
Cancelling a Print Job 5.5
Using a Favorite Setting 5.6
Using Help 5.6
Setting Paper Properties 5.7
Using the Toner Save Mode 5.9
Printing on Both Sides of Paper 5.11
Printing Multiple Pages on One Sheet of Paper
(N-Up Printing) 5.13
Printing the Reduced or Enlarged Document 5.14
Fitting Your Document to a Selected Paper Size 5.15
Printing Posters 5.16
Printing Booklets 5.17

Using Watermarks 5.18
Using an Existing Watermark 5.18
Creating a Watermark 5.19
Editing a Watermark 5.20
Deleting a Watermark 5.20
Using Overlays 5.21
What is an Overlay? 5.21
Creating a New Page Overlay 5.21
Using a Page Overlay 5.23
Deleting a Page Overlay 5.24
Setting Graphic Properties 5.25
Using Output Options 5.28

Chapter 6: MAINTAINING YOUR PRINTER

Printing a Configuration Page 6.2
Maintaining the Toner Cartridge 6.3
Checking the Toner Remains 6.4
Redistributing Toner 6.4
Replacing the Toner Cartridge 6.6
Cleaning the Printer 6.7
Cleaning the Outside 6.7
Cleaning the Inside 6.7
Consumables and Replacement Parts 6.10

Chapter 7: SOLVING PROBLEMS

Troubleshooting Checklist 7.2
Solving General Printing Problems 7.3
Clearing Paper Jams 7.7
In the Paper Feed Area 7.7
Around the Toner Cartridge 7.10
In the Paper Exit Area 7.12
In the Duplex Area 7.13
Tips for Avoiding Paper Jams 7.14
Solving Print Quality Problems 7.15
Understanding Display Messages 7.20
Common Windows Problems 7.22
Common Macintosh Problems 7.23
Problems in the Chooser 7.23
Printing Errors 7.23
Troubleshooting PS Errors 7.24
Common Linux Problems 7.25
Common DOS Problem 7.27

Appendix A: USING YOUR PRINTER WITH A MACINTOSH

Installing Software for Macintosh A.2

Creating a Desktop Printer A.4
- Creating a Desktop Printer for the SPL Driver A.4
- Creating a Desktop Printer for the PS Driver A.4

Printing a Document A.6

Using Advanced Printing Features A.8

Appendix B: USING WINDOWS POSTSCRIPT DRIVER

Installing PPD Files B.2
- Reinstalling the PS Driver (Windows 2000/XP) B.4
- Uninstalling the PS Driver B.5

Using PS Printer Driver Features B.6
- Accessing Printer Properties B.6

Appendix C: USING YOUR PRINTER IN LINUX

Installing the Printer Driver C.2
- System Requirements C.2
- Installing the Printer Driver C.2
- Changing the Printer Connection Method C.6
- Uninstalling the Printer Driver C.7

Using the Configuration Tool C.8

Changing LLPR Properties C.10

Appendix D: PRINTING FROM DOS APPLICATIONS

About the Remote Control Panel D.2

Installing the Remote Control Panel D.2
- Uninstalling the Remote Control Panel D.3

Selecting Print Settings D.4
- Starting the Remote Control Panel D.4
- Using the Remote Control Panel Tabs D.5

Appendix E: USING YOUR PRINTER ON A NETWORK

About Sharing the Printer on a Network E.2

Setting Up a Locally Shared Printer E.3
- In Windows 9x/Me E.3
- In Windows NT 4.0/2000/XP E.4

Setting Up a Network-Connected Printer E.5
- Configuring Network Parameters on the Control Panel E.6

Appendix F: PROGRAMME INSTALLING PRINTER OPTIONS

Precautions When Installing Printer Options F.2

Installing Memory and PostScript DIMMs F.3
- Removing the Memory or PS DIMM F.6

Installing a Network or Serial Interface Card F.6

Installing an Optional Paper Tray F.10

Appendix G: SPECIFICATIONS

Printer Specifications G.2

Paper Specifications G.3
- Overview G.3
- Supported Sizes of Paper G.4
- Guidelines for Using Paper G.5
- Paper Specifications G.6
- Paper Output Capacity G.6
- Printer and Paper Storage Environment G.7
- Envelopes G.8
- Labels G.10
- Transparencies G.10

Environmental and Safety Consideration

Laser Safety Statement

The printer is certified in the U.S. to conform to the requirements of DHHS 21 CFR, chapter 1 Subchapter J for Class I(1) laser products, and elsewhere, is certified as a Class I laser product conforming to the requirements of IEC 825.

Class I laser products are not considered to be hazardous. The laser system and printer are designed so there is never any human access to laser radiation above a Class I level during normal operation, user maintenance, or prescribed service condition.

WARNING
Never operate or service the printer with the protective cover removed from Laser/ Scanner assembly. The reflected beam, although invisible, can damage your eyes. When using this product, these basic safety precautions should always be followed to reduce risk of fire, electric shock, and injury to persons:

CAUTION - INVISIBLE LASER RADIATION WHEN THIS COVER OPEN. DO NOT OPEN THIS COVER.

VORSICHT - UNSICHTBARE LASERSTRAHLUNG, WENN ABDECKUNG GEÖFFNET. NICHT DEM STRAHL AUSSETZEN.

ATTENTION - RAYONNEMENT LASER INVISIBLE EN CAS D'OUVERTURE. EXPOSITION DANGEREUSE AU FAISCEAU.

ATTENZIONE - RADIAZIONE LASER INVISIBILE IN CASO DI APERTURA. EVITARE L'ESPOSIZIONE AL FASCIO.

PRECAUCIÓN - RADIACIÓN LASER INVISIBLE CUANDO SE ABRE. EVITAR EXPONERSE AL RAYO.

PERIGO - RADIAÇÃO LASER INVISÍVEL AO ABRIR. EVITE EXPOSIÇÃO DIRECTA AO FEIXE.

GEVAAR - ONZICHTBARE LASERSTRALEN BIJ GEOPENDE KLEP. DEZE KLEP NIET OPENEN.

ADVARSEL. - USYNLIG LASERSTRÅLNING VED ÅBNING, NÅR SIKKERHEDSBRYDERE ER UDE AF FUNKTION. UNDGÅ UDSAETTELSE FOR STRÅLNING.

ADVARSEL. - USYNLIG LASERSTRÅLNING NÅR DEKSEL ÅPNES. STIRR IKKE INN I STRÅLEN. UNNGÅ EKSPONERING FOR STRÅLEN.

VARNING - OSYNLIG LASERSTRÅLNING NÄR DENNA DEL ÄR ÖPPEN OCH SPÄRREN ÄR URKOPPLAD. BETRAKTA EJ STRÅLEN. STRÅLEN ÄR FARLIG.

VARO! - AVATTAESSA JA SUOJALUKITUS OHITETTAESSA OLET ALTTIINA NÄKYMÄTTÖMÄLLE LASER-SÄTEILYLLE ÄLÄ KATSO SÄTEESEEN.

注 意 - 严禁揭开此盖, 以免激光泄露灼伤

주 의 - 이 덮개를 열면 레이저광에 노출될 수 있으므로 주의하십시오.

Ozone Safety

During normal operation, this machine produces ozone. The ozone produced does not present a hazard to the operator. However, it is advisable that the machine be operated in a well ventilated area.

If you need additional information about ozone, please contact your nearest Samsung dealer.

Power Saver

This printer contains advanced energy conservation technology that reduces power consumption when it is not in active use.

When the printer does not receive data for an extended period of time, power consumption is automatically lowered.

The energy star emblem does not represent EPA endorsement of any product or service.

Recycling

Please recycle or dispose of the packaging material for this product in an environmentally responsible manner.

Radio Frequency Emissions

FCC regulations

This device has been tested and found to comply with the limits for a Class B digital device, pursuant to Part 15 of the FCC rules. These limits are designed to provide reasonable protection against harmful interference in a residential installation. This equipment generates, uses and can radiate radio frequency energy and, if not installed and used in accordance with the instructions, may cause harmful interference to radio communications. However, there is no guarantee that interference will not occur in a particular installation. If this equipment does cause harmful interference to radio or television reception, which can be determined by turning the equipment off and on, the user is encouraged to try to correct the interference by one or more of the following measures:

1. Reposition the receiving antenna.
2. Increase the separation between the equipment and receiver.
3. Connect the equipment into an outlet on a circuit different from that to which the receiver is connected.
4. Consult the dealer or an experienced radio/TV technician for help.

CAUTION: Changes or modifications not expressly approved by the manufacturer responsible for compliance could void the user's authority to operate the equipment.

Canadian Radio Interference Regulations

This digital apparatus does not exceed the Class B limits for radio noise emissions from digital apparatus as set out in the interference-causing equipment standard entitled “Digital Apparatus”, ICES-003 of the Industry and Science Canada.

Cet appareil numérique respecte les limites de bruits radioélectriques applicables aux appareils numériques de Classe B prescrites dans la norme sur le matériel brouilleur: “Appareils Numériques”, ICES-003 édictée par l’Industrie et Sciences Canada.

United States of America

Federal Communications Commission (FCC)

Intentional emitter per FCC Part 15

Low power, Radio LAN type devices (radio frequency (RF) wireless communication devices), operating in the 2.4 GHz Band, may be present (embedded) in your printer system. This section is only applicable if these devices are present. Refer to the system label to verify the presence of wireless devices.

Wireless devices that may be in your system are only qualified for use in the United States of America if an FCC ID number is on the system label.

The FCC has set a general guideline of 20 cm (8 inches) separation between the device and the body, for use of a wireless device near the body (this does not include extremities). This device should be used more than 20 cm (8 inches) from the body when wireless devices are on. The power output of the wireless device (or devices), which may be embedded in your printer, is well below the RF exposure limits as set by the FCC.

This transmitter must not be collocated or operation in conjunction with any other antenna or transmitter.

Operation of this device is subject to the following two conditions:(1) This device may not cause harmful interference, and(2) this device must accept any interference received, including interference that may cause undesired operation of the device.

Wireless devices are not user serviceable. Do not modify them in any way. Modification to a wireless device will void the authorization to use it. Contact manufacturer for service.

FCC Statement for Wireless LAN use:
“While installing and operating this transmitter and antenna combination the radio frequency exposure limit of 1mW/cm2 may be exceeded at distances close to the antenna installed. Therefore, the user must maintain a minimum distance of 20cm from the antenna at all times. This device can not be colocated with another transmitter and transmitting antenna.”

Declaration of Conformity (European Countries)

Approvals and Certifications

The CE marking applied to this product symbolises Samsung Electronics Co., Ltd. Declaration of Conformity with the following applicable 93/68/EEC Directives of the European Union as of the dates indicated:

January 1, 1995: Council Directive 73/23/EEC Approximation of the laws of the member states related to low voltage equipment.

January 1, 1996: Council Directive 89/336/EEC (92/31/EEC), approximation of the laws of the Member States related to electromagnetic compatibility.

March 9, 1999: Council Directive 1999/5/EC on radio equipment and telecommunications terminal equipment and the mutual recognition of their conformity.

A full declaration, defining the relevant Directives and referenced standards can be obtained from your Samsung Electronics Co., Ltd. representative.

EC Certification

Certification to 1999/5/EC Radio Equipment & Telecommunications Terminal Equipment Directive (FAX)

This Samsung product has been self-certified by Samsung for pan-European single terminal connection to the analogue public switched telephone network (PSTN) in accordance with Directive 1999/5/EC. The product has been designed to work with the national PSTNs and compatible PBXs of the European countries:

In the event of problems, you should contact the Euro QA Lab of Samsung Electronics Co., Ltd. in the first instance.

The product has been tested against TBR21 and/or TBR 38. To assist in the use and application of terminal equipment which complies with this standard, the European Telecommunication Standards Institute (ETSI) has issued an advisory document (EG 201 121) which contains notes and additional requirements to ensure network compatibility of TBR21 terminals. The product has been designed against, and is fully compliant with, all of the relevant advisory notes contained in this document.

European Radio Approval Information (for products fitted with EU-approved radio devices)

This Product is a printer; low power, Radio LAN type devices (radio frequency (RF) wireless communication devices), operating in the 2.4 GHz band, may be present (embedded) in your printer system which is intended for home or office use. This section is only applicable if these devices are present. Refer to the system label to verify the presence of wireless devices.

Wireless devices that may be in your system are only qualified for use in the European Union or associated areas if a CE mark with CE a Notified Body Registration Number and the Alert Symbol is on the system label.

The power output of the wireless device or devices that may be embedded in you printer is well below the RF exposure limits as set by the European Commission through the R&TTE directive.

European States qualified under wireless approvals:

EU	Austria, Belgium, Denmark, Finland, France (with frequency restrictions), Germany, Greece, Ireland, Italy, Luxembourg, The Netherlands, Portugal, Spain, Sweden and the United
Accept EU	Iceland, Liechtenstein, Norway and Switzerland

European States with restrictions on use:

EU	In France, the frequency range is restricted to 2446.5-2483.5 MHz for devices above 10 mW transmitting power such as wireless
Accept EU	No limitations at this time.

Regulatory Compliance Statements

Wireless Guidance

Low power, Radio LAN type devices (radio frequency (RF) wireless communication devices), operating in the 2.4 GHz Band, may be present (embedded) in your printer system. The following section is a general overview of considerations while operating a wireless device.

Additional limitations, cautions, and concerns for specific countries are listed in the specific country sections (or country group sections). The wireless devices in your system are only qualified for use in the countries identified by the Radio Approval Marks on the system rating label. If the country you will be using the wireless device in, is not listed, please contact your local Radio Approval agency for requirements. Wireless devices are closely regulated and use may not be allowed.

The power output of the wireless device or devices that may be embedded in your printer is well below the RF exposure limits as known at this time. Because the wireless devices (which may be embedded into your printer) emit less energy than is allowed in radio frequency safety standards and recommendations, manufacturer believes these devices are safe for use. Regardless of the power levels, care should be taken to minimize human contact during normal operation.

As a general guideline, a separation of 20 cm (8 inches) between the wireless device and the body, for use of a wireless device near the body (this does not include

extremities) is typical. This device should be used more than 20 cm (8 inches) from the body when wireless devices are on and transmitting.

This transmitter must not be collocated or operation in conjunction with any other antenna or transmitter.

Some circumstances require restrictions n wireless devices. Examples of common restrictions are listed below:

Radio frequency wireless communication can interfere with equipment on commercial aircraft. Current aviation regulations require wireless devices to be turned off while traveling in an airplane. 802.11B (also known as wireless Ethernet) and Bluetooth communication devices are examples of devices that provide wireless communication.

In environments where the risk of interference to other devices or services is harmful or perceived as harmful, the option to use a wireless device may be restricted or eliminated. Airports, Hospitals, and Oxygen or flammable gas laden atmospheres are limited examples where use of wireless devices may be restricted or eliminated. When in environments where you are uncertain of the sanction to use wireless devices, ask the applicable authority for authorization prior to use or turning on the wireless device.

Every country has different restrictions on the use of wireless devices. Since your system is equipped with a wireless device, when traveling between countries with your system, check with the local Radio Approval authorities prior to any move or trip for any restrictions on the use of a wireless device in the destination country.

If your system came equipped with an internal embedded wireless device, do not operate the wireless device unless all covers and shields are in place and the system is fully assembled.

Wireless devices are not user serviceable. Do not modify them in any way. Modification to a wireless device will void the authorization to use it. Please contact manufacturer for service.

Only use drivers approved for the country in which the device will be used. See the manufacturer System Restoration Kit, or contact manufacturer Technical Support for additional information.

SAMSUNG ELECTRONICS

EU Declaration of Conformity (RTTE)

We, Samsung Electronics Co, Ltd.

of #259, GongDan-Dong,Gumi-Shi, GyungBuk, KOREA 730-030
(factory name, address)

declare under our sole responsibility that the product

Laser Beam Printer
model "ML-2150, ML-2151N, ML-2152W"

to which this declaration relates is in conformity with

RTTE Directive 1999/5/EC (Annex Ⅱ)
Low Voltage Directive 73/23/EEC
EMC Directive 89/336/EEC:92/31/EEC

By application of the following standards

RTTE : ETSI EN 300 328, , ETSI EN 301 489

LVD : EN 60950:1992 +A1+A2+A3+A4+A11

EMC : EN55022:1998,EN61000-3-2:1995+A1+A2:1998,EN61000-3-3:1995,EN55024:1998

(Manufacturer)

Samsung Electronics co.,ltd
#259,KongDan-Dong,GuMi-City
KyungBuk, Korea 730-030

2003-03-17

(place and date of issue)

Whan-Soon Yim / Senior Manager

(name and signature of authorized person)

(Representative in the EU)

Samsung Electronics Euro QA Lab.
Blackbushe Business Park
Saxony Way, Yateley, Hampshire
GU46 6GG, UK

2003-03-17

(place and date of issue)

In-Seop Lee / Manager

(name and signature of authorized person)

WARNING

- Do not disassemble the printer. Doing so may give you an electric shock.
- If you continuously print many pages, the surface of the output tray may become hot. Be careful not to touch the surface, especially for children.

1 INTRODUCTION

Congratulations on the purchase of your printer!

This chapter includes:

- **Special Features**
- **Printer Components**

Special Features

Your new printer is equipped with special features that improve the print quality, giving you a competitive edge. You can:

Print with excellent quality and high speed

- You can print at **1200 dots per inch** (dpi). See page 5.25.
- Your printer prints **25 pages-per-minute (Letter size)**, **24 pages-per-minute (A4 size)**.

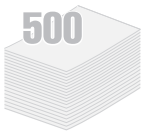

Handle paper flexibly

- A 100-sheet **Multi-Purpose Tray** supports letterheads, envelopes, labels, transparencies, custom-sized materials, postcards, and heavy paper.
- **Standard 500-sheet input tray** (Tray1) and **optional 500-sheet input tray** (Tray2) supports all standard sizes of paper.
- Two output tray; select either **the top output (face-down)** or **the rear output tray (face-up)** for the most convenient access.
- **Straight-through paper path** capability from the Multi-Purpose Tray to the rear output tray.

Create professional documents

- You can customise your documents using **Watermarks**, such as "Confidential." See page 5.18.
- Print **Booklets**. This feature enables you to easily print the pages required to create books. Once printed, all you have to do is to fold and staple the pages.
- Print **Posters**. The text and pictures of each page of your document are magnified and printed across the selected sheet of paper. After the document has printed, trim off the white edges of each sheet. Tape the sheets together to form a poster.

Save your time and money

- This printer allows you to use **Toner Save mode** to save toner. See page 5.9.
- You can print on both sides of the paper to save paper (**double-sided printing**). See page 5.11.
- You can print multiple pages on one single sheet of paper to save paper (**N-Up printing**). See page 5.13.
- Preprinted forms and letterheads can be printed on plain paper. See "Using Overlays" on page 5.21.
- This printer automatically **conserves electricity** by substantially reducing power consumption when not printing.
- This printer meets **Energy Star** guidelines for energy efficiency.

Expand the printer capacity

- This printer has 32 MB of memory which can be expanded to **144 MB**.
- An optional **PostScript 3 Emulation*** (PS) DIMM adds PS printing.

  ML-2551N and ML-2552W comes with PostScript 3 Emulation.
- An optional **Serial interface** card allows you to use the serial connection.
- **Network interface** enables network printing. You can add the optional network interface card to ML-2550.

  ML-2551N and ML-2552W comes with a built-in network interface, 10/100 Base TX. ML-2552W also has a wireless network interface.

OAK TECHNOLOGY

* PostScript 3 Emulation

IPS-PRINT_Printer language Emulation© Copyright 1995-2003, Oak Technology, Inc., All rights reserved

* 136 PS3 fonts

Contains UFST and MicroType from Agfa Monotype Corporation.

Print in various environments

- You can print in **Windows 95/98/Me/NT 4.0/2000/XP**.
- Your printer is compatible with **Linux** and **Macintosh**.
- Your printer comes with both the **Parallel** and **USB** interfaces.

  You can also use a **network interface**. ML-2551N and ML-2552W comes with a built-in network interface, 10/100 Base TX. ML-2552W also has a wireless network interface. But, you need to add the optional network interface card to ML-2550.

Printer Features

The table below lists a general overview of features supported by your printer.

(S: Standard, O: Option)

Features	ML-2550	ML-2551N	ML-2552W
IEEE 1284	S	S	S
USB 2.0	S	S	S
Network Interface	O	S	S
Wireless LAN	O	O	S
PostScript Emulation	O	S	S
Serial Interface	O	O	O

Printer Components

Front View

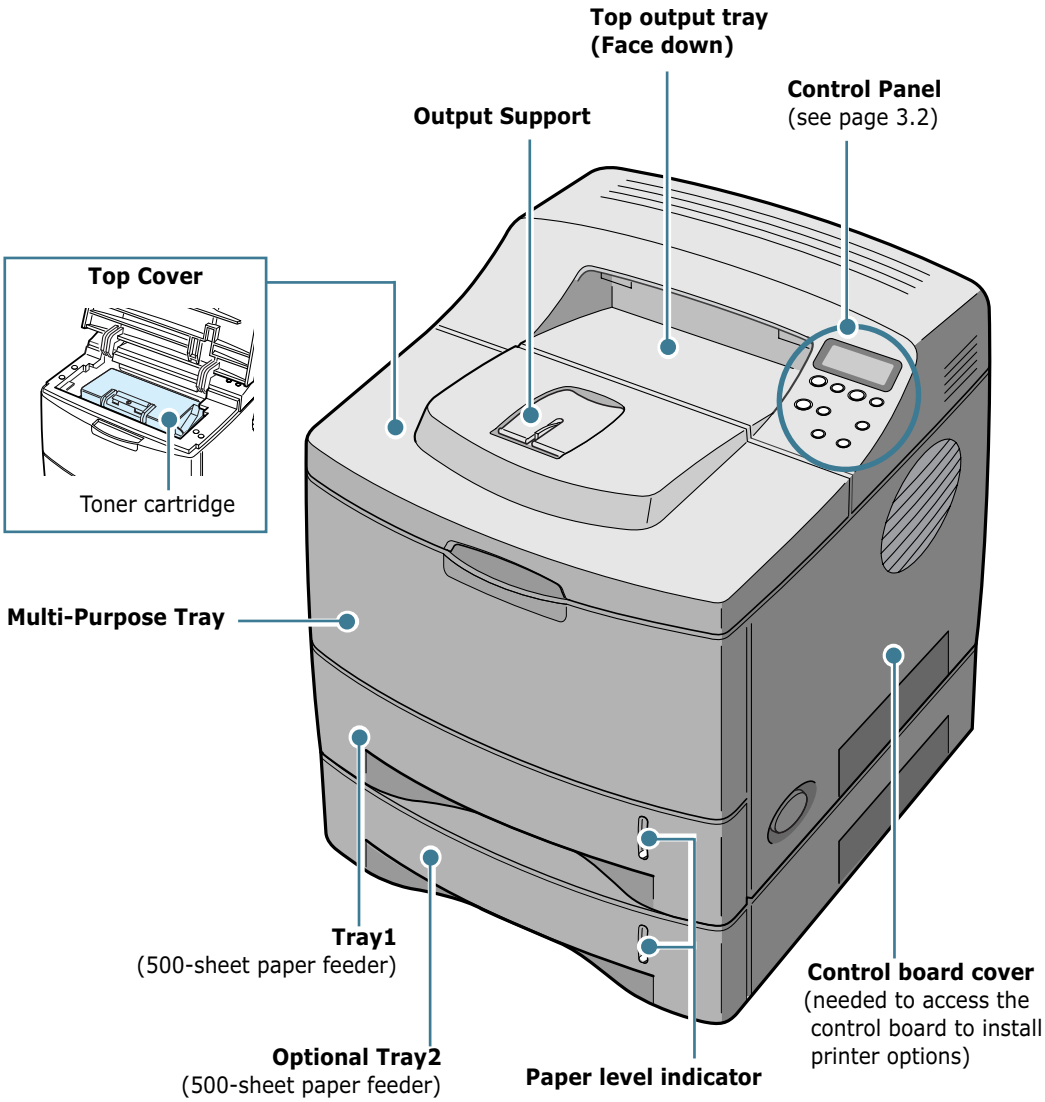

Rear View

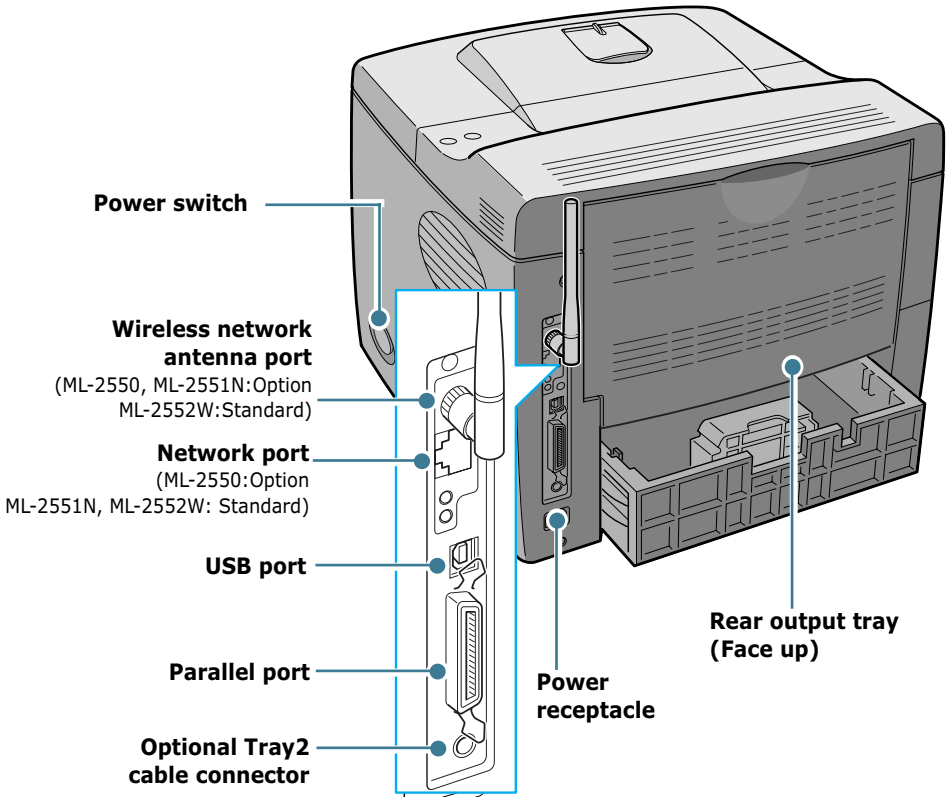

* The figure above shows a ML-2552W.

2 SETTING UP YOUR PRINTER

This chapter provides step by step information on setting up your printer.

This chapter includes:

- **Unpacking**
- **Installing the Toner Cartridge**
- **Loading Paper**
- **Connecting a Printer Cable**
- **Turning the Printer On**
- **Printing a Demo Page**
- **Changing the Display Language**
- **Installing Printer Software**

Unpacking

1 Remove the Printer and all accessories from the packing carton. Make sure that the printer has been packed with the following items:

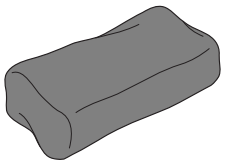 Toner Cartridge	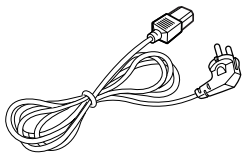 Power Cord
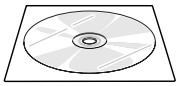 CD-ROM	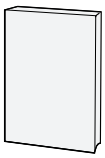 Setup Guide

NOTES:

- If any items are missing or damaged, notify your dealer immediately.
- **Components may differ from one country to another.**
- The CD-ROM contains the printer driver, the User's Guide and the Adobe Acrobat Reader programme.

2 Carefully remove all of the packing tapes from the printer.

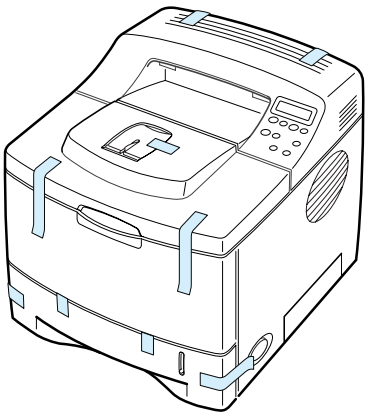

3 Pull the paper tray out of the printer. Remove the packing tapes from the tray.

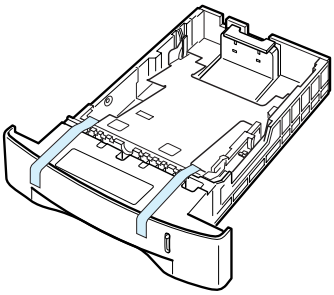

Selecting a Location

Select a level, stable place with adequate space for air circulation. Allow extra space for opening covers and trays. The area should be well-ventilated and away from direct sunlight or sources of heat, cold, and humidity. Do not set the printer close to the edge of your desk or table.

Clearance Space

Front: 482.6 mm (enough space so that trays can be removed)

Back: 320 mm (enough space to allow opening of the rear cover)

Right: 100 mm

Left: 100 mm (enough space for ventilation)

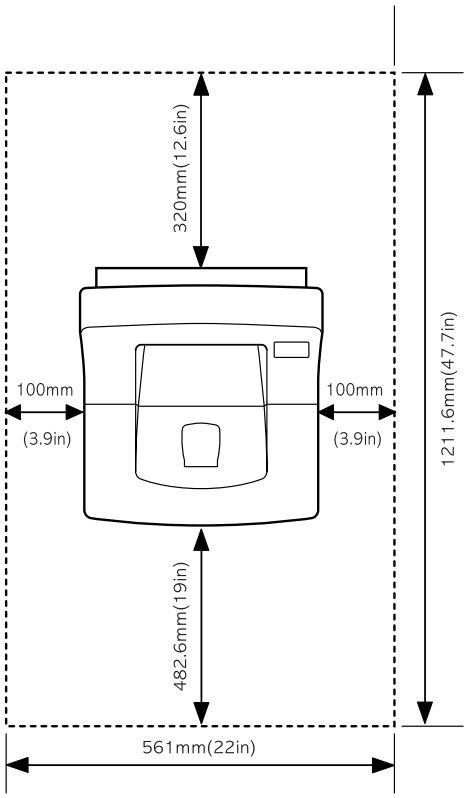

Installing the Toner Cartridge

1 Open the top cover. Pull up on the handle to open the cover.

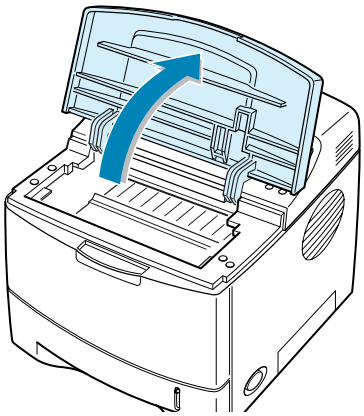

2 Remove the toner cartridge from its bag.

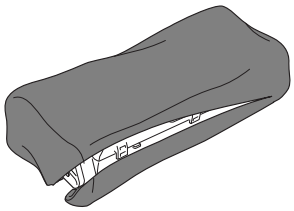

Don’t use a knife or other sharp objects as they might scratch the drum of the cartridge.

3 Locate the sealing tape at the end of the toner cartridge. Carefully pull the tape completely out of the cartridge and discard it.

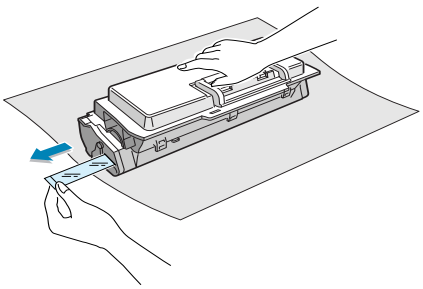

NOTE:

- The sealing tape should be longer than 550 mm when correctly removed.
- Holding the toner cartridge, pull the sealing tape straight to remove it from the cartridge. Be careful not to cut the tape. If this happens, you cannot use the toner cartridge

4 Gently shake the cartridge from side to side to distribute the toner evenly inside the cartridge.

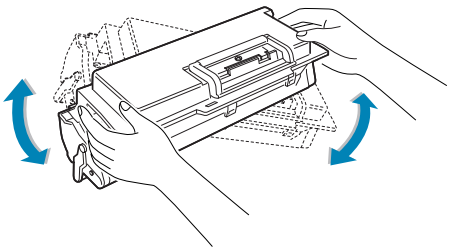

CAUTIONS:

- To prevent damage, do not expose the toner cartridge to light for more than a few minutes. Cover it with a piece of paper, if left exposed for more than a few minutes.
- If toner gets on your clothing, wipe it off with a dry cloth and wash clothing in cold water. Hot water sets toner into fabric.

5 Locate the cartridge slots inside the printer, one on each side.

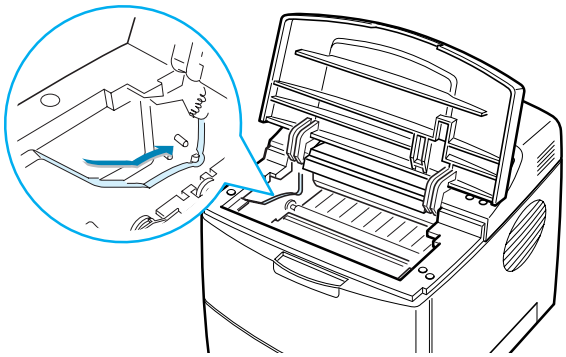

6 Grasp the handle and insert the cartridge in the printer until it snaps into place.

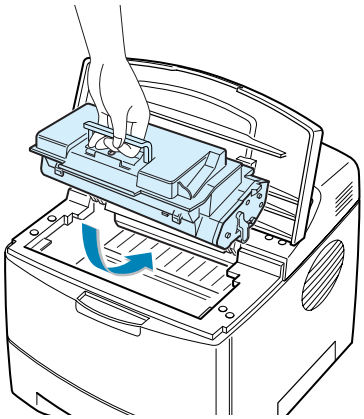

7 Close the top cover. Make sure that the cover is securely closed.

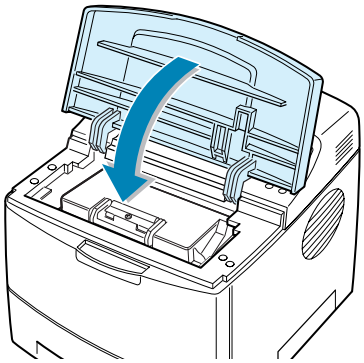

NOTE: When printing text at 5% coverage, you can expect a toner cartridge life of approximately 10,000 pages (5,000 pages for the toner cartridge that is shipped with the printer).

Loading Paper

You can load approximately 500 sheets of paper in the tray.

1 Pull the tray out of the printer.

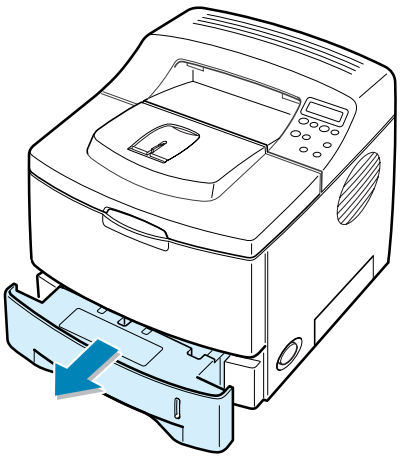

2 Prepare a stack of paper for loading by flexing or fanning them back and forth. Straighten the edges on a level surface.

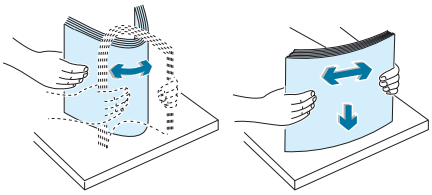

3 Load paper **with the print side facing down**.

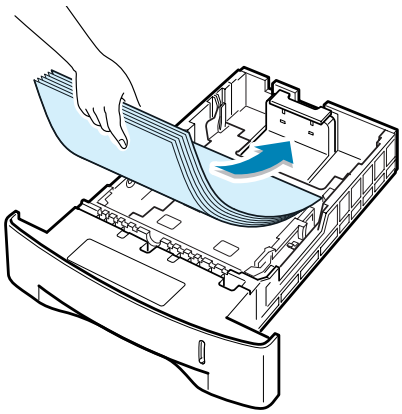

You can load previously printed paper. The printed side should be facing up with an uncurled edge at the top side. If you experience problems with paper feed, turn the paper around.

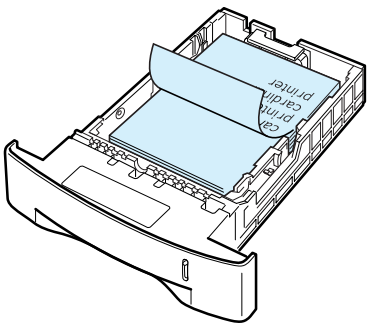

Make sure that all four corners are flat in the tray.

4 Pay attention to the paper limit mark on the left inside wall of the tray. Paper overloading may cause paper jams.

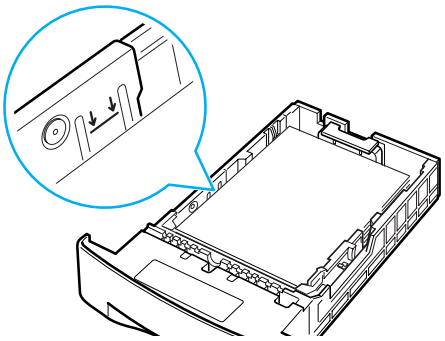

NOTE: If you want to change the paper size in the tray, refer to "Changing the Paper Size in the Tray" below.

5 Slide the tray back into the printer.

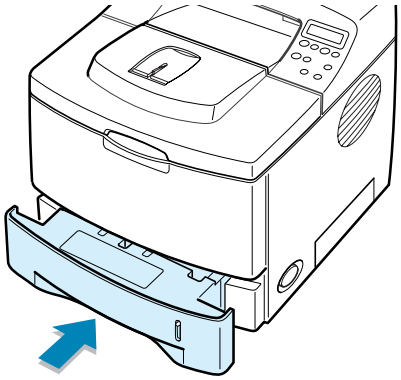

Changing the Paper Size in the Tray

If you load long paper in the tray, you should adjust the paper guides to the paper length.

1 Push the back plate of the tray outwards completely so that it can extend the length of the tray.

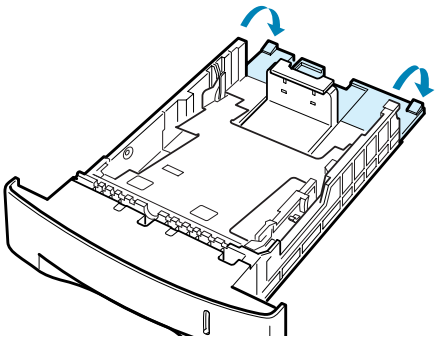

2 Squeeze the tab on the paper length guide and adjust it, so that it fits to the desired paper size marked at the bottom of the tray.

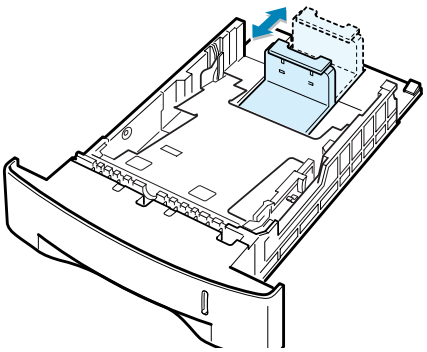

3 Squeeze the paper width guide and adjust it to the desired paper size marked at the bottom of the tray.

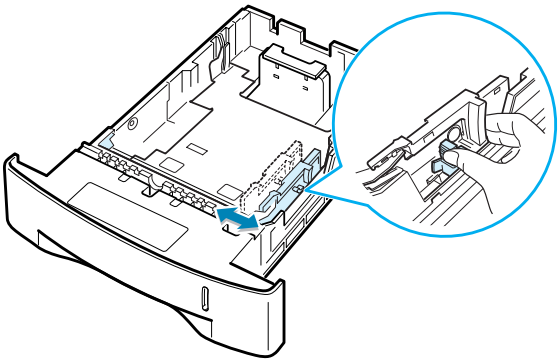

NOTES:

- Do not push the width guide far enough to cause the material to warp.
- If you do not adjust the width guide, it may cause paper jams.

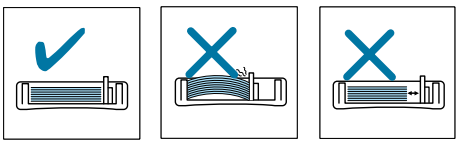

Connecting a Printer Cable

For Local Printing

To print from your computer in a local environment, you need to connect your printer to the computer with either a parallel interface cable or a Universal Serial Bus (USB) cable.

If you are a Macintosh user, you can use only the USB cable.

Using a Parallel Cable

NOTE: To connect the printer to the parallel port of the computer requires a certified parallel cable. You will need to buy a IEEE1284 compliant cable.

1. Make sure that both the printer and the computer are turned off.

2. Plug the parallel printer cable into the connector on the back of the printer.

   Push the metal clips down to fit inside the notches on the cable plug.

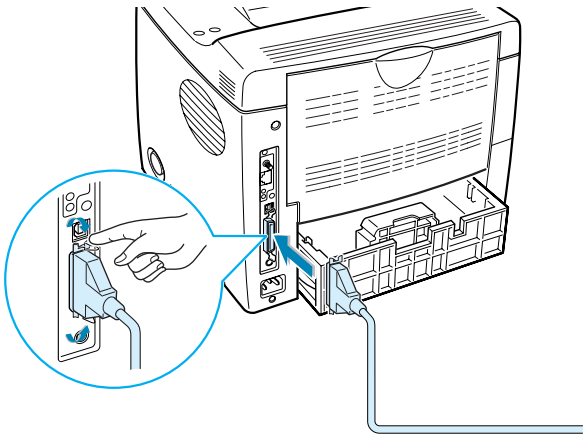

To the parallel port on your computer

3. Connect the other end of the cable to the parallel interface port on your computer, and tighten the screws.

   See your computer User's Guide, if you need help.

Using a USB Cable

NOTE: Connecting the printer to the USB port of the computer requires a certified USB cable. You will need to buy a USB 2.0 compliant cable that is within 3 m in length.

1 Make sure that both the printer and the computer are turned off.

2 Plug the USB printer cable into the connector on the back of the printer.

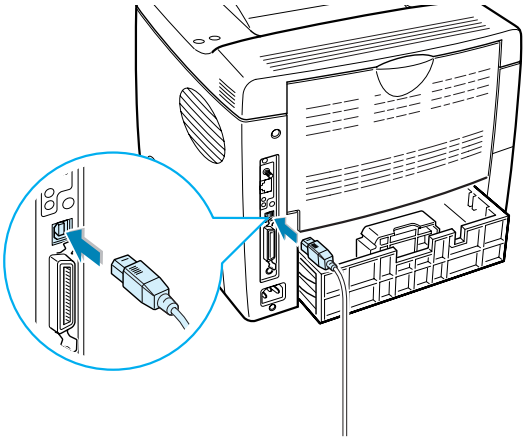

3 Connect the other end of the cable to the USB port on your computer.

See your computer User's Guide, if you need help.

NOTES:

- For printing using the USB interface, you must be running Windows 98/Me/2000/XP or Macintosh with the OS 8.6 and the G3 processor or higher.
- If you want to print using the USB interface in Windows 98/Me, you must install the USB driver to add the USB port. See page 2.20.

For Network Printing

You can attach your ML-2551N or ML-2552W printer to a network using an Ethernet cable (UTP cable with RJ.45 connector).

ML-2552W also has a network antenna which allows you to use a wireless LAN interface.

If you are a ML-2550 user, you need to install the optional network interface card. For a ML-2551N printer, you can replace the network interface card to one supporting the wireless LAN interface. For details about installing the card, see page F.6.

Using an Ethernet Cable

1 Make sure that both the printer and the computer are turned off.

2 Plug one end of the Ethernet cable into the Ethernet network port on the Printer.

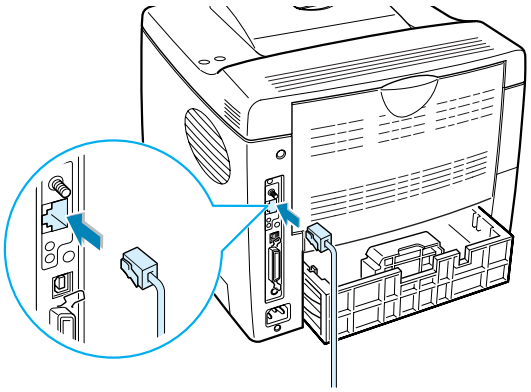

To the network LAN connection

3 Plug the other end of the cable into a network LAN connection.

See your computer User's Guide, if you need help.

Using a Network Antenna

1 Screw the wireless network antenna counterclockwise into the port.

2 Set the antenna upright.

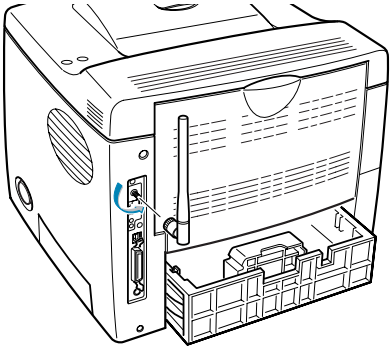

NOTE: After connecting the printer, you need to configure the network parameters on the control panel. See page E.6. You can use the software supplied with the card. Refer to the software User's Guide.

Turning the Printer On

1 Plug the power cord into the power receptacle on the back of the printer.

2 Plug the other end into a properly grounded AC outlet and turn on the printer using the power switch.

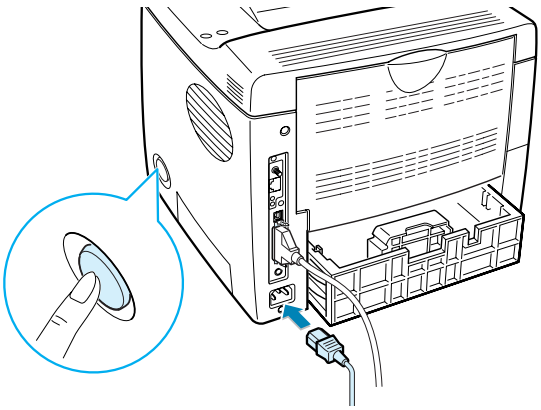

CAUTIONS:

- The fusing area at the rear portion of the inside of your printer is hot when powered. Be careful not to be burned when accessing this area.
- Do not disassemble the printer when it is powered. Doing so may give you an electric shock.

Printing a Demo Page

Print a demo page to make sure that the printer is operating correctly.

1. Press the **Menu** button ( ) on the control panel until you see "Information" on the bottom line of the display.
2. Press the **Enter** button ( ) to access the menu.
3. Press the scroll button (or) until you see "Demo Page" on the bottom line.
4. Press the **Enter** button ( ).

   A demo page showing the printer's features and capabilities prints out.

Changing the Display Language

To change the language that is displayed on the control panel, take the following steps:

1. Press the **Menu** button ( ) on the control panel until you see "Setup" on the bottom line of the display.
2. Press the **Enter** button ( ) to access the menu.
3. Press the scroll button (or) until you see "LCD Language" on the bottom line.
4. Press the **Enter** button ( ) to confirm the menu item.
5. Press the scroll button (or) to display the language you want to use.
6. Press the **Enter** button ( ) to save the selection.

Installing Printer Software

The supplied CD-ROM contains Windows Printing software, Macintosh Printing software, Linux Printing software, Win RCP, on-line User's Guide, and Acrobat Reader to view the User's Guide.

If you are printing from a Windows

Using the supplied CD-ROM, you can install:

- **SPL** printer driver for Windows. Use this driver to take full advantage of your printer's features. Go to page 2.17 for information about installing the Samsung SPL printer driver.
- **PostScript** Printer Description (PPD) file for Windows to allow installation of the PostScript driver. Go to Appendix B, "Using Windows PostScript Driver" for information about installing the PostScript driver.
- **Remote Control Panel** for Dos applications. Go to Appendix D, "Printing From DOS Applications" for information about installing the DOS print software and printing from DOS applications.
- **USB** driver for adding the USB port to Windows 98/Me. You must first install the USB driver for the USB connection in Windows 98/Me. See "Installing the USB Driver in Windows 98/Me" on page 2.20. In Windows 2000/XP, the USB port is provided so that you don't have to install the USB driver. Just install the printer driver.

If you are printing from a Macintosh

Go to Appendix A, "Using Your Printer with a Macintosh" for information about installing the print software and printing from a Macintosh.

If you are printing in Linux

Go to Appendix C, "Using Your Printer in Linux" for information about installing the Linux driver.

Printer Driver Features

The Samsung ML-2550 series printer drivers will support the following standard features:

- Paper source selection
- Paper size, orientation and media type
- Number of copies

Table below lists a general overview of features supported by the your printer drivers.

Driver Feature	SPL				PostScript			
	Win 2000/XP	Win 9x	Win NT4.0	Mac	Win 2000/XP	Win 9x	Win NT4.0	Mac
Toner Save	Y	Y	Y	N	Y	Y	Y	N
Print quality option	Y	Y	Y	Y	Y	Y	Y	Y
Double-sided printing	Y	Y	Y	N	Y	Y	Y	Y
Booklet printing	Y	Y	Y	N	Y	N	N	N
Poster printing	Y	Y	Y	N	N	N	N	N
Multiple pages per sheet (N-up)	Y	Y	Y	Y	Y	Y	N	Y
Scale printing	Y	Y	Y	Y	Y	Y	Y	Y
Fit to page printing	Y	Y	Y	N	Y	Y	Y	Y
Different source for first page	Y	Y	Y	N	N	N	N	Y
Watermark	Y	Y	Y	Y	N	N	N	N
Overlay	Y	Y	Y	N	N	N	N	N
TrueType fonts option	Y	Y	Y	N	Y	Y	Y	N

Installing Printer Software in Windows

System Requirements

Verify the following:

Item	Requirements	
Operating system	Windows 95/98/Me/NT 4.0/2000/XP	
RAM	95/98/Me	32 MB
	NT 4.0/2000	64 MB
	XP	128 MB
Free disk space	95/98/Me	200 MB
	NT 4.0/2000	200 MB
	XP	200 MB
At least Internet Explorer 5.0		

All applications should be closed on your PC before beginning installation.

Installing printer software

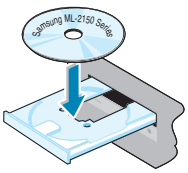

1 Place the CD-ROM in the CD-ROM drive. Installation will start automatically.

If the CD-ROM drive does not automatically run:

Select **Run** from the **Start** menu, type **x:\cdsetup.exe** in the Open box (where **x** is the drive letter for the CD-ROM drive) and click **OK**.

NOTE: If the New Hardware Found window appears during the installation procedure, click the ✕ icon in the upper right corner of the window, or click **Cancel**.

2 When the language selection window appears, select the appropriate language.
If you can't find the desired language from the window, use the scroll button on the bottom right of the screen to display more languages.

3 Click **Install the Samsung Software on your PC**.

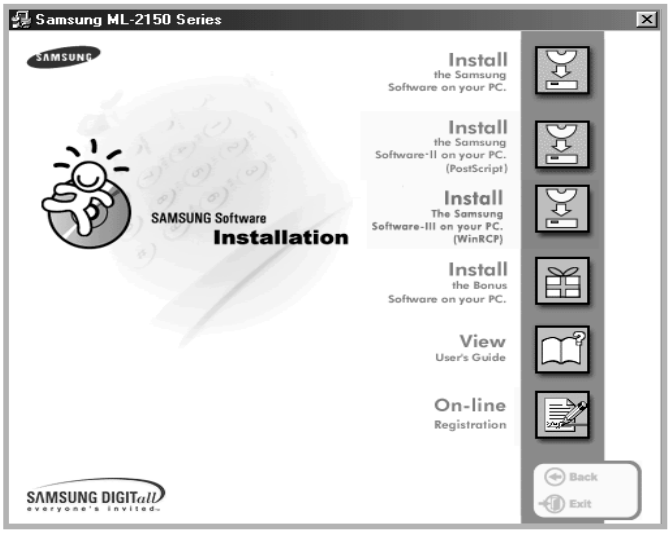

4 Click **Next**.

5 When the installation is completed, click **Finish**.

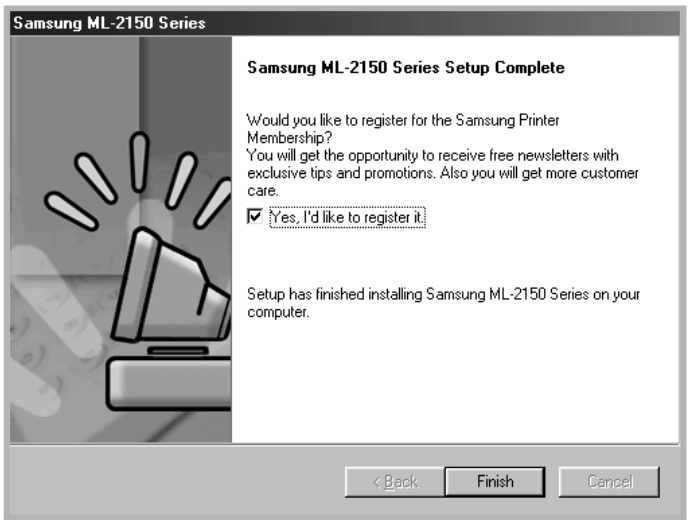

Reinstalling Printer Software

1 From the **Start** menu, select **Programs**.

2 Select **Samsung ML-2550 Series**, and then **Samsung ML-2550 Series Driver Maintenance**.

3 The Samsung ML-2550 Series Driver Maintenance window appears. Click **Repair** and then click **Next**.

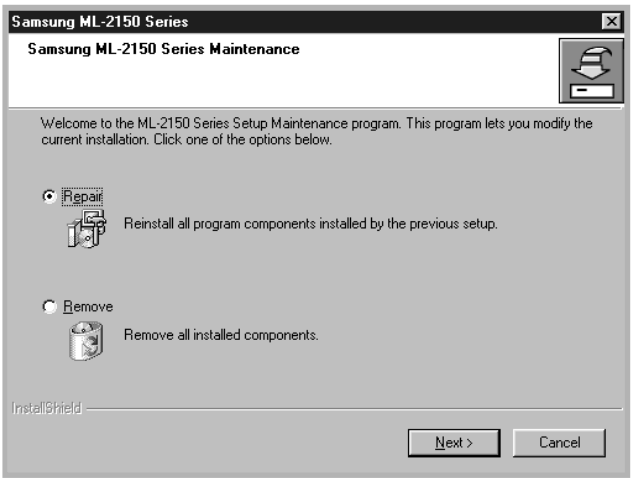

4 When reinstallation is done, click **Finish**.

Removing Printer Software

1 From the **Start** menu, select **Programs**.

2 Select **Samsung ML-2550 Series**, and then **Samsung ML-2550 Series Driver Maintenance**.

3 The Samsung ML-2550 Series Driver Maintenance window appears. Check **Remove** and then click **Next**.

4 When you are asked to confirm your selection, click **OK**.

The Samsung ML-2550 Series printer driver and all of its components are removed from your computer.

5 When removing is completed, click **Finish**.

Changing the Display Language

After installing the software, you can change the display language.

1 From the **Start** menu, select **Programs**.

2 Select **Samsung ML-2550 Series** and **Language Selection**.

3 Select the desired language from the **Printer Driver** drop-down list, and click **OK**.

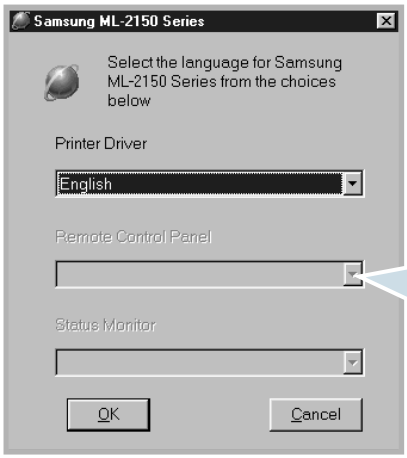

Once you have installed the Remote Control Panel programme, this list is activated. You can select a language for the programme.

Installing the USB Driver in Windows 98/Me

1 Connect the printer to your computer using the USB cable and turn them on. For further details, see page 2.11.

2 The Add New Hardware Wizard window appears. Click **Next**.

3 Place the CD-ROM in the CD-ROM drive and check **Search for the best driver for your device** and click **Next**.

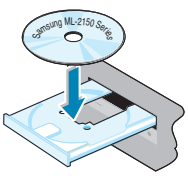

4 Check **CD-ROM drive** and click **Browse**. Choose **x:\USB** (where **x** is the drive letter for the CD-ROM drive) and click **Next**.

5 Click **Next**. The USB driver will be installed.

6 When the installation is completed, click **Finish**.

7 When the language selection window appears, select the appropriate language.

NOTE: If you already installed the printer software, this window doesn't appear.

8 Follow the instructions on the window to complete the printer software installation. For more details, see page 2.17.

NOTES:

- If you want to use your printer with a parallel cable, remove the USB cable and connect the parallel cable. Then reinstall the printer driver.
- If your printer doesn't work properly, reinstall the printer driver.

MEMO

3 USING THE CONTROL PANEL

This chapter describes how to use the printer's control panel.

This chapter includes:

- **Understanding the Control Panel**
- **Using Control Panel Menus**

Understanding the Control Panel

The control panel on the top right side of your printer has the display and the nine buttons.

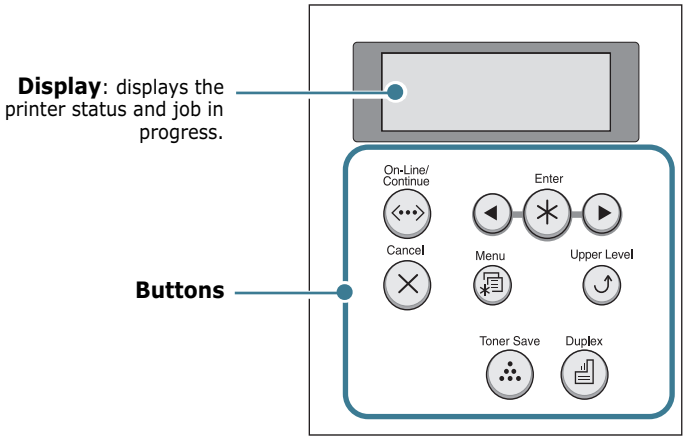

Display

Message	Description
Ready	• The printer is on-line and ready to print. • If you press **On-Line/Continue**, the printer switches to off-line.
Offline	• The printer is off-line and cannot print. • If you press **On-Line/Continue**, the printer switches to on-line.
Printing XXX * *xxx is the current emulation.*	• The printer is printing. • If you want to cancel printing, press **Cancel**.
Sleeping...	• The printer is in Power Save mode, consuming less power. When a print job is received from the computer or if any button is pressed, the printer switches to on-line. • To deactivate the Power Save mode or change the power-saving time, see page 3.13.

See "Understanding Display Messages" on page 7.20 for a complete listing of all the printer messages.

Buttons

<table>
<tr><th>Button</th><th colspan="3">Description</th></tr>
<tr><td rowspan="6">On-Line/ Continue</td><td colspan="3">• Press to switch between on-line and off-line.
• In menu mode, press to return to ready mode.

You can check the printer status according to the button backlight.</td></tr>
<tr><td rowspan="2">Green</td><td>On</td><td>The printer is on-line and can receive data from the computer.</td></tr>
<tr><td>Blinking</td><td>• When the backlight slowly blinks, the printer is receiving data from the computer.
• When the backlight fast blinks, the printer is receiving and printing data.

If you want to pause printing, switch the printer to off-line.</td></tr>
<tr><td rowspan="2">Orange</td><td>On</td><td>The printer stops printing due to a major error. Check the display message. See page 7.20 for details on the meaning of the error message.</td></tr>
<tr><td>Blinking</td><td>A minor error occurs and the printer is waiting an error to be cleared. Check the display message. When the problem is cleared, the printer resumes printing. If you want to ignore this warning, press this button.</td></tr>
<tr><td>Off</td><td colspan="2">• The printer is off-line and cannot print.
• The printer is in Power Save mode. When data is received, it switches to on-line.</td></tr>
<tr><td>Menu</td><td colspan="3">• Press to enter menu mode.
• In menu mode, press to scroll through the menus.</td></tr>
<tr><td>Enter</td><td colspan="3">In menu mode, press to select the displayed submenu item or confirm the changed setting. You can see the selected value marked with *.</td></tr>
</table>

Button	Description
◀ ▶	In menu mode, press to scroll through submenu items or setting options. Pressing ▶ moves you to the next option and pressing ◀ sends you back to the previous option.
Cancel	• Press to cancel the current print job. • In menu mode, press to return to ready mode.
Upper Level	In menu mode, press to go back to the upper menu level.
Toner Save	Press to enable or disable Toner Save mode. • If the button backlight is on, the mode is enabled and the printer uses less toner to print a document. • If the button backlight is off, the mode is disabled and the printer will print in the normal quality. For more information on the Toner Save mode, see page 5.9.
Duplex	Press to enable or disable the double-sided printing. • If the button backlight is on, the printer print on both sides of paper with long edge binding. • If the button backlight is off, the double-side printing is disabled and the printer prints on one side of paper. **Note**: The double-sided printing setting in the printer driver overrides that on the control panel.

Using Control Panel Menus

A number of menus are available to make it easy for you to change printer settings. The diagram on page 3.6 shows the menus and all of the menu items available in each menu. The items in each menu and the values you can select are described in more detail in the tables beginning on page 3.7.

Accessing Control Panel Menus

3

You can control your printer from the printer's control panel. You can also set the control panel menus while the printer is in use.

1. Press the **Menu** button ( ) until you see the desired menu on the bottom line of the display or Press the scroll button (or) until the desired menu item displays on the bottom line
2. Press the **Enter** button ( ) to access the menu.
3. Press the scroll button (or) until the desired menu item displays on the bottom line.
4. Press the **Enter** button ( ) to confirm the selected item.
5. If the selected menu item has submenus, repeat steps 3 and 4.
6. Press the scroll button (or) until the desired setting option displays on the bottom line or enter the required value.
7. Press the **Enter** button ( ) to save your input or selection.

   An asterisk (*) appears next to the selection on the display, indicating that it is now the default.
8. To exit the menu, press the **Upper Level** button ( ) repeatedly, or the **Cancel** button( ).

   After 60 seconds of inactivity (no key has been pressed), the printer automatically returns to ready mode.

NOTE: Duplicate print settings that are selected in the printer driver override the settings on the control panel.

Overview of Control Panel Menus

The control panel menus are used to configure the printer for your environment. The control panel provides access to the following menus.

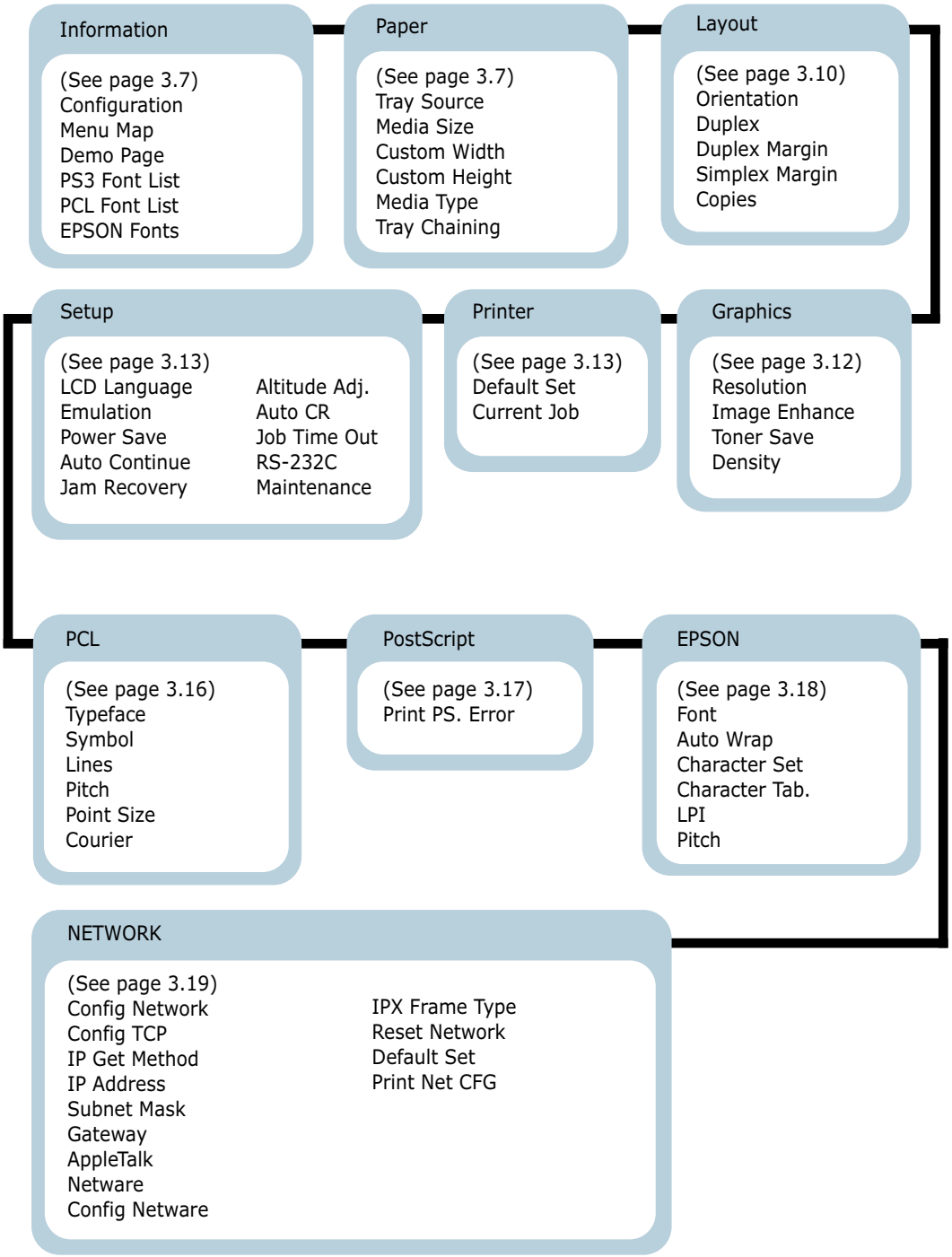

Information Menu

This menu contains printer information pages that give details about the printer and its configuration.

Item	Explanation
Configuration	The configuration page shows the printer's current configuration. See page 6.2.
Menu Map	The menu map shows the layout and current settings of the control panel menu items
Demo Page	The demo page allows you to check if your printer properly performs printing.
PS3 Font List PCL Font List EPSON Fonts	The font sample list shows all of the fonts currently available in the selected language. For a ML-2550 printer, the **PS3 Font list** item is available only when the optional PS DIMM is installed.

Paper Menu

Use this menu to define all settings relating to print material input and output, as well as the specific print material you are using with your printer.

(*: the default setting)

Item	Explanation
Tray Source	Values: Auto Select*, Tray 1,MP Tray, Tray 2 , Manual Tray. Using this item, you can set the tray you will use. • If you select **Auto Select**, the printer can automatically determine the source. • Select **MP Tray** or **Manual Tray** to use the Multi-Purpose Tray. If you select **Manual Tray**, you need to press the **On-Line/Continue** button each time you print a page. • The **Tray 2** item is available only when the optional Tray2 is installed.

Item	Explanation
Media Size	Values: Letter, Legal, A4, Executive, JIS B5, ISO B5, No. 10 Env., Monarch Env., DL Env. , C5 Env., C6 Env. , Folio, A5, A6,Custom * Letter for USA, A4 for Europe and Asia Select the paper size currently loaded in the tray.
Custom Width	Values: A4:210 mm/ Letter:215 mm * Letter for USA, A4 for Europe and Asia Select the paper size currently loaded in the tray. This Menu is shown when Media size value is set up by custom. • **Custom Width**: Set the custom width, from 76 to 216 mm
Custom Height	Values: A4:297 mm/ Letter:279 mm * Letter for USA, A4 for Europe and Asia Select the paper size currently loaded in the tray. This Menu is shown when Media size value is set up by custom. • **Custom Height**: Set the custom heigh, from 127 to 356 mm
Media Type	Values: Off*, Plain Paper, Thick, Thin, Bond, Color Paper, Card Stock, Labels, Transparency, Envelope,Preprinted, The Media Type setting lets you specify the type of print material you are using to get the best result. • **Plain Paper**: Select for plain paper. • **Thick**: Select for thick paper • **Thin**: Select for thin paper • **Bond**: Select for thick paper. • **Color Paper**: Select for coloured paper. • **Card Stock**: Select for card stocks. • **Labels**: Select for labels. • **Transparency**: Select for transparencies. • **Envelope**: Select for envelops. • **Preprinted**: Preprinted is for paper with something else printed on it, such as letterhead.

Item	Explanation
Tray Chaining	Values: Off, On* When you select any other value except **Auto Select** from **Tray Source** and the selected tray is empty, the printer automatically prints from other trays. If this menu item is set to **Off**, the **On-Line/Continue** button backlight blinks in orange and the printer doesn't work until you insert paper into the specified tray.

Layout Menu

Use the **Layout** menu to define all settings relating to output.

(*: the default setting)

Item	Explanation
Orientation	Values: Portrait*, Landscape Choose the default orientation of print image on the page. Portrait Landscape
Duplex	Values: Off*, Long Edge, Short Edge To print on both sides of paper, choose the binding edge as followings. • **Long Edge**: Flip on long edge. Prints pages to read like a book. • **Short Edge**: Flip on short edge. Prints pages to read by flipping over like a note pad. 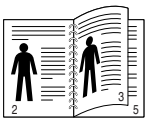 Long Edge in the Portrait orientation 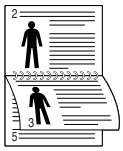 Long Edge in the Landscape orientation Short Edge in the Portrait orientation 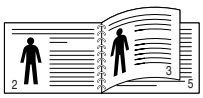 Short Edge in the Landscape orientation Select **Off** to print on one side of paper.

Item	Explanation
Duplex Margin	Values: Top/Left:5.0* , Short/Long: 0* In this menu, you can set the margin of print materials for double-sided printing. • **Top Margin**: Set the top margin, from 0.0 to 9.9 mm.(increasing by 0.1mm) • **Left Margin**: Set the left margin, from 0.0 to 9.9 mm.(increasing by 0.1mm) • **Short Binding**: Set the bottom margin of the rear side for short binding, from 0.0 to 22 mm.(increasing by 1mm) • **Long Binding**: Set the right margin of the rear side for long binding, from 0.0 to 22 mm.(increasing by 1mm)
Simplex Margin	Values: 0.0* Set the margin of print materials for one-sided printing. • **Top Margin**: Set the top margin, from 0.0 to 9.9 inches. (increasing by 0.1 inches) • **Left Margin**: Set the left margin, from 0.0 to 9.9 inches. (increasing by 0.1 inches)
Copies	Values: 1* ~ 999 Set the default number of copies by selecting any number from 1 to 999.

Graphics Menu

Use the **Graphics** menu to change settings affecting the quality of the printed characters and images.

(*: the default setting)

Item	Explanation
Resolution	Values: 300dpi-Draft, 600dpi-Normal*, 1200dpi-Best Specify the number of dots printed per inch (dpi). The higher the setting, the sharper the clarity of printed characters and graphics. • Select **300dpi-Draft** to print a draft document. • If your print jobs are mostly text, select **600dpi-Normal** for the highest quality output. • Select **1200dpi-Best** when your job contains bitmapped images, such as scanned photos or some business graphics, that will benefit from enhanced line screening.
Image Enhance	Values: Normal*, Image Enhance, Text Enhance, This item enhances the print quality. • **Normal**: Doesn't enhance the quality. • **Image Enhance**: Enhances bitmap images, like scanned pictures. • **Text Enhance**: Enhances letters and simple figures.
Toner Save	Values: Off*, On To get the most from your toner supply, set this menu to **Off**. If you set this menu to **On**, the print quality may be reduced.
Density	Values: Light, Medium*, Dark You can lighten or darken the print on the page by changing the toner density setting. The **Medium** setting usually produces the best result. Use the **Light** toner density setting to save toner.

Printer Menu

This menu allows you to reset the printer settings or cancel the current job.

Item	Explanation
Default Set	This menu item allows you to restore the printer's factory default settings.
Current Job	You can cancel the current print job and remove it from the printer buffer.

3

Setup Menu

Use the **Setup** menu to configure a variety of printer features.

(*: the default setting)

Item	Explanation
LCD Language	Values: English*, German, French, Italian, Spanish The LCD Language setting determines the language of the text that appears on the control panel display and information printing.
Emulation	Values: Auto*, PCL, HEXDUMP, PS3, EPSON, IBM ProPrint The printer language defines how the computer communicates with the printer. If you select **Auto**, your printer can change the printer language automatically. For a ML-2550 printer, **PS3** is available only when the optional PS DIMM is installed.
Power Save	Values: Off, 5Minutes*, 10 Minutes, 15 Minutes, 30 Minutes, 45 Minutes, 60 Minutes When the printer does not receive data for an extended period of time, power consumption is automatically lowered. Set how long the printer waits before going to the power save state.

Item	Explanation
Auto Continue	Values: Off, On* This item determines whether or not the printer continues printing when it detects the paper mismatching to your paper setting. • **Off**: If the paper mismatch occurs, the message will remain on the display and the printer will remain off-line until you insert the correct paper. • **On**: If the paper mismatches, an error message will display. The printer will go offline for 30 seconds and automatically clear the message and continue printing.
Jam Recovery	Values: Off*, On This item determines how the printer behaves when a paper jam occurs. • **Off**: The printer does not reprint pages. Printing performance might be increased with this setting. • **On**: The printer automatically reprints pages after you clear the paper jam.
Altitude Adj.	Values: Low*, High You can optimise the print quality depending on the air pressure, such as in a high ground.

Auto CR	Values: LF*, LF+CR
	
	This item allows you to append the required carriage return to each line feed.
	Refer to the following samples:
	AA
	  BB
	  CC
	LF
	AA
	BB
	CC
	LF+CR

Item	Explanation
Job Time Out	Values: 0 ~ 300 sec *15 sec You can set the time length the printer waits before printing the last page of a print job that does not end with a command to print the page. When a print time-out occurs, the printer prints the page in the print buffer.
RS-232C	This item is only available if the optional serial interface card is installed in your printer. For details, see page F.6. • **Baud Rate**: Lets you select the rate at which data is being sent to or from your computer using the serial communication. Note that using a setting higher than 19200 bps with the COM port may cause unexpected errors in DOS mode. • **Robust XON**: Turns use of XON/OFF of serial communication control on or off. When this item is set to **On**, the printer sends a continuous stream of XONs to the computer to indicate that the serial port is ready to receive more data.
Maintenance	This item allows you to maintain the toner cartridge. • **OPC Cleaning**: Cleans the OPC drum of the cartridge and produces a cleaning sheet with toner debris on it. • **Fuser Cleaning**: Cleans the fuser unit inside of the printer and produces a cleaning sheet with toner debris on it. • **Remain Toner:** This item allows you to check how much toner are left in the cartridge.

PCL Menu

This menu sets the PCL emulation configuration. You can set the font type, symbol type, lines per page, and point size.

(*: the default setting)

Item	Explanation
Typeface	Values: PCL1* ~ PCL54 You can select the standard font to be used in PCL emulation. • PCL1~PCL7's interval between letters is fixed, and PCL8~PCL45's interval is proportional to the font type and point size. You can adjust the font size of PCL1~PCL7 using the **Pitch** item, and PCL8~PCL45 can do using **Point Size** item (see page 3.17). • PCL46~PCL54's interval and point size are fixed.
Symbol	Values: ROMAN8 ~ PCCYRIL *PC8 This item selects the symbol to be used in PCL emulation. The symbol is the group of numbers, marks, and special signs being used when printing letters.
lines	Values: 5 ~ 128 *60 (Letter), 64 (A4) This item allows you to set vertical spacing from 5 to 128 lines for the default paper size. The lines may differ according to the paper size and printing orientation.
Pitch	Values: 0.44 ~ 99.99 (0.01 unit) *10 When you select one between PCL1 and PCL7 from the **Typeface** menu, you can determine the font size by setting the number of characters that will print in one horizontal inch of type. The default value, 10 is the best size.

Item	Explanation
Point Size	Values: 4.00 ~ 999.75 (0.25 unit) *12 When you select one between PCL8 and PCL45 from the **Typeface** menu, you can determine the font size by setting the height of the characters in the font.
Courier	Values: Regular*, Dark This item lets you select the version of Courier font to use.

3

PostScript Menu

This menu provides you with the **Print PS. Error** menu item.

(*: the default setting)

Item	Explanation
Print PS.Error	Values: Off*, On You can select whether or not your printer prints an error list when a PS error occurs. • Select **On** to print PS 3 emulation errors. If an error occurs, the job stops processing, the error message prints, and the printer flushes the job. • If this menu is set to **Off**, the job is flushed without an indication of the error. For a ML-2550 printer, this menu is available only when you installed the optional PS DIMM; for details, see page F.3.

EPSON Menu

This menu sets the EPSON emulation configuration.

(*: the default setting)

Item	Explanation
Font	Values: SANSERIF*, ROMAN You can select the standard font will use in EPSON emulation.
Auto Wrap	Values: On, Off* This item determines whether or not the printer automatically performs line feed when the data overflows the printable area of the print material.
Character Set	Values: USA*, FRANCE, GERMANY, UK, DENMARK1, SWEDEN, ITALY, SPAIN1, JAPAN, NORWAY, DENMARK2, SPAIN2, LATIN This item allows you to select a character set of the desired language.
Character Tab.	Values: ITALIC, PC437US*, PC850 This item selects the character set.
LPI	Values: 6*, 8 You can set the number of lines printed in one vertical inch.
Pitch	Values: 10*, 12, 17.14, 20 You can determine the font size by setting the number of characters that will print in one horizontal inch of type.

Network Menu

This menu lets you set the network interface card's configuration .

(*: the default setting)

Item	Explanation
Config Network	Values: Yes, No* Set whether or not you want to configure network values. If you select **Yes**, you can configure TCP/IP,AppleTalk and Netware menu.
Config TCP	Values: Yes, No* Select whether you want to set the IP address item or not. If you select **Yes**, you can configure IP address item.
IP Get Method	Values: Static*, BOOTP, DHCP You can set this item only when you set **Config TCP** to **Yes**. • **Static**:You can enter IP address, subnetmask, and gateway manually. • **BOOTP**:The BOOTP server allots the IP address to you automatically. • **DHCP**: The DHCP server allots the IP address to you automatically.
IP Address	You can select this item only when you set **IP Get Method** to **Static**. This item lets you enter the IP address manually. Press the scroll button to set the value of the 1st byte between 0 and 255, and then press the **Enter** button. For the 2nd to the 4th byte, you can set the value in the same way.

Item	Explanation
Subnet Mask	You can set this item only when you set **IP Get Method** to **Static**. This item lets you enter the subnet mask manually. Press the scroll button to set the value of the 1st byte between 0 and 255, and then press the **Enter** button. For the 2nd to the 4th byte, you can set the value in the same way.
Gateway	You can set this item only when you set **IP Get Method** to **Static**. This item lets you enter the gateway manually. Press the scroll button to set the value of the 1st byte between 0 and 255, and then press the **Enter** button. For the 2nd to the 4th byte, you can set the value in the same way.
AppleTalk	Values: On*, Off This item lets you select whether or not you use the AppleTalk protocol. Select **On** to use the protocol
Netware	Values: On*, Off This item selects whether you want to use the Netware protocol. If you select **On**, you can access the **Config Netware** menu item. In the **Config Netware** menu, you can specify the frame type parameter used on your network.
Config Netware	Values: Yes, No* You can set this item only when you set **Netware** to **On**. This item lets you select whether or not you set the frame type parameter. Select **Yes** to select the frame type.

Item	Explanation
IPX Frame Type	Values:Auto*,EN_8022,EN_8023,EN_II, EN_SNAP You can select this item only when you set **Config Netware** to **Yes**. This item lets you select IPX Frame Type. • **Auto**:You can set the frame type automatically. • **EN_8022**: Select this value to use the IEEE 802.2 frame type. • **EN_8023**:Select this value to use the IEEE 802.3 frame type. • **EN_II** :Select this value to use the ETHERNET II frame type. • **EN_SNAP**:Select this value to use the SNAP frame type.
Reset Network	This item reboots the network interface card.
Default Set	This item restores the factory default of the network configuration. This setting will only take effect after you have reset the printer.
Print Net CFG	This item print a page showing the network parameters you set.

MEMO

4 USING PRINT MATERIALS

This chapter will help you understand types of paper you can use with your printer and how to properly load paper in the different paper trays for the best print quality.

This chapter includes:

- **Choosing Paper and Other Materials**
- **Selecting the Output Location**
- **Loading Paper**
- **Printing on Envelopes**
- **Printing on Labels**
- **Printing on Transparencies**
- **Printing on Preprinted Paper**
- **Printing on Card Stock or Custom-sized Materials**

Choosing Paper and Other Materials

You can print on a variety of print materials, such as plain paper, envelopes, labels, transparencies and so on. See "Paper Specifications" on page G.3. To get the best possible print quality, use only high-quality copier-grade paper.

When you choose print materials, consider the following:

- **Desired outcome**: The paper you choose should be appropriate for the project.
- **Size**: You can use any size paper that fits easily within the paper adjusters of the paper tray.
- **Weight** : Your printer supports paper weight as follows:

  -16~28 lbs (60~105 g/m^2) bond for the Tray1 or optional Tray2

  -16~43 lbs (60~163 g/m^2) bond for the Multi-Purpose Tray
- **Brightness**: Some papers are whiter than others and produce sharper, more vibrant images.
- **Surface smoothness**: The smoothness of the paper affects how crisp the printing looks on the paper.

CAUTION: Using a material that does not conform to the specification listed in the paper specification can cause problems that may require service. This service is not covered by the warranty or service agreements.

Sizes and Capacities

Size	Input Source/Capacity*a		
	Tray1 or optional Tray2	Multi-Purpose Tray	Manual Feed
Plain Paper			
Letter (8.5 x 11 in.)	500	100	1
Legal (8.5 x 14 in.)	500	100	1
Executive (7.25 x 10.5 in.)	500	100	1
Folio (8.5 x 13 in.)	500	100	1
A4 (210 x 297 mm)	500	100	1
B5 (182 x 257 mm)	500	100	1
A5 (148 x 210 mm)	200	100	1
Envelopes			
No. 10 (4.12 x 9.5 in.)	-	10	1
Monarch (3.87 x 7.5 in.)	-	10	1
C5 (162 x 229 mm)	-	10	1
DL (110 x 220 mm)	-	10	1
B5 (176 x 250 mm)	-	10	1
Labels*b			
Letter (8.5 x 11 in.)	-	25	1
A4 (210 x 297 mm)	-	25	1
Transparencies*b			
Letter (8.5 x 11 in.)	-	50	1
A4 (210 x 297 mm)	-	50	1
Card stocks*b	-	10	1
Bond*b	-	10	1

**a. Depending on paper thickness, the maximum capacity may be reduced.*
**b. If you are experiencing excessive jamming, feed one sheet at a time through the Multi-Purpose Tray.*

Guidelines for Paper and Special Materials

When selecting or loading paper, envelopes, or other special materials, keep these guidelines in mind:

- Attempting to print on damp, curled, wrinkled, or torn paper can cause paper jams and poor print quality.
- Use cut-sheet paper only. You cannot use multi-part paper.
- Use only high-quality, copier grade paper for the best print quality.
- Do not use paper that has been already printed on or that has been fed through a photocopier.
- Do not use paper with irregularities, such as tabs or staples.
- Do not attempt to load any tray during printing and never overfill the tray. This could cause a paper jam.
- Avoid paper with embossed lettering, perforations, or texture that is too smooth or too rough.
- Coloured paper should be of the same high quality as white photocopy paper. The pigments must withstand the printer's fusing temperature of 400°F (205°C) for 0.1 second without deterioration. Do not use paper with a coloured coating that was added after the paper was produced.
- Preprinted forms must be printed with nonflammable, heat-resistant ink that do not melt, vaporize, or release hazardous emissions when subject to the printer's approximately 400°F (205°C) fusing temperature for 0.1 second.
- Store paper in its ream wrapper until ready to use. Place cartons on pallets or shelves, not on the floor.
- Do not place heavy objects on top of the paper, whether it is packaged or unpackaged.
- Keep paper away from moisture, direct sunlight or other conditions that can cause it to wrinkle or curl.

Selecting the Output Location

The printer has two output locations; the rear output tray and the top output tray.

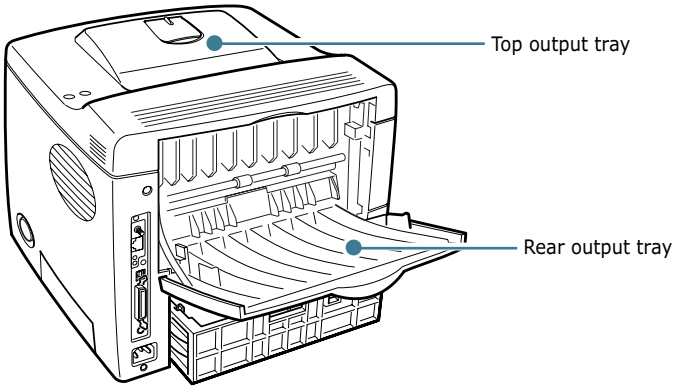

To use the top output tray, be sure that the rear output tray is closed. To use the rear output tray, open it.

NOTES:

- If paper coming out of the top output tray has problems, such as excessive curl, try printing to the rear output tray.
- To avoid paper jams, do not open or close the rear output tray while the printer is printing.

Printing to the Top Output Tray *(Face down)*

The top output tray collects paper face-down, in correct order. The top output tray should be used for most print jobs.

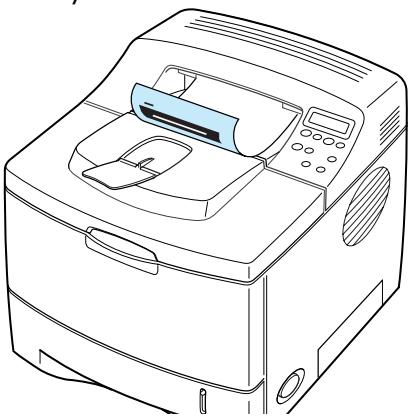

NOTE: If you continuously print many pages, the surface of the output tray may become hot. Be careful not to touch the surface, especially for children.

Printing to the Rear Output Tray *(Face up)*

The printer always prints to the rear output tray if it is open. Paper comes out of the printer face-up, with the last page on top.

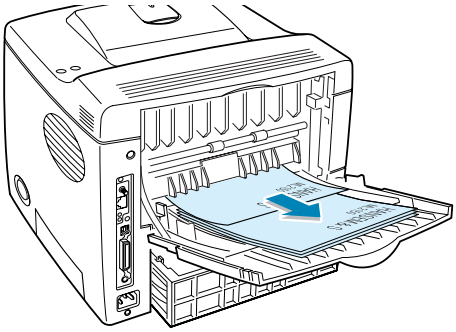

Printing from the Multi-Purpose Tray to the rear output tray provides the **straight paper path**. Opening the rear output tray might improve output quality with the following:

- over 100 sheets of paper continuously
- envelopes
- labels
- small custom-size paper
- postcards
- paper lighter than 60 g/m^2 (16 lb) or heavier than 105 g/m^2 (28 lb)
- transparencies: some special transparencies may have stacking problem by curl. In that case, please use the top output tray (face down).

To open the rear output tray:

1. Open the rear door by pulling it down. The cover functions as the output tray.

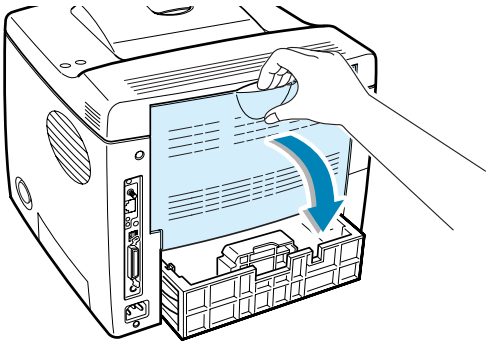

CAUTION: The fusing area at the rear portion of the inside of your printer is hot when powered. Be careful not to be burned when accessing this area.

2 Pull the extender to extend the output tray to its full-length position to hold longer paper.

3 If you do not want to stack the printed pages on the rear output tray, slide the extender to its place and close the tray. The pages will stack on the top output tray.

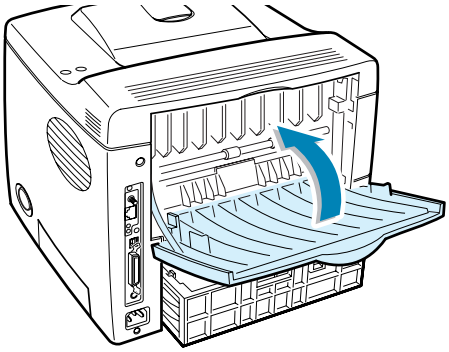

NOTE: The rear output tray can hold up to 100 sheets of paper. If the tray is overloaded with printed pages, it may fall from the printer. Remove the pages so that the tray is not overloaded.

Loading Paper

Proper paper loading helps prevent paper jams and ensure trouble-free printing. Do not remove the paper tray while a job is printing. Doing so may cause a paper jam. See "Sizes and Capacities" on page 4.3 for acceptable paper size and capacities for each tray.

The paper level bar on the front of the paper tray(s) shows the amount of paper currently left in the tray. When the tray is empty, the indicator of the bar is lowered.

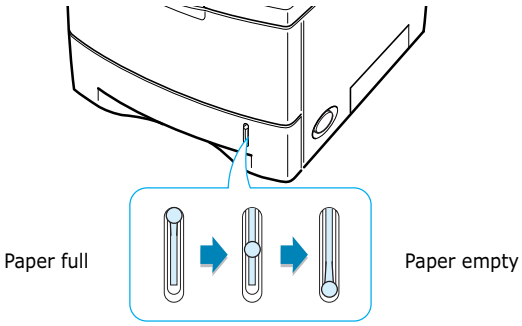

Using the Tray1 or the Optional Tray2

The Tray1 and the optional Tray2 can hold up to 500 sheets of paper. See "Sizes and Capacities" on page 4.3 for acceptable paper size and capacities of each tray.

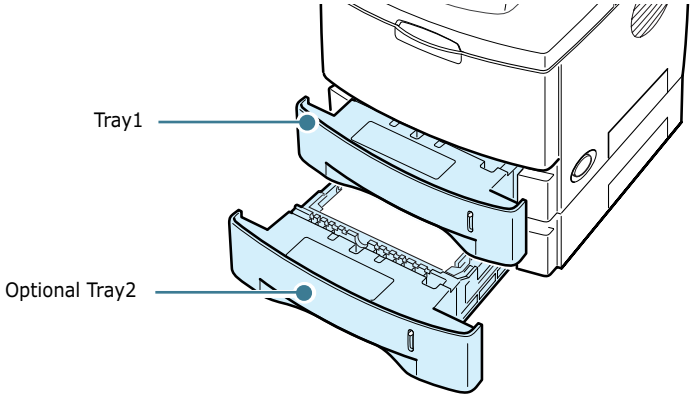

Load a stack of paper into the tray and print. For details about loading paper in the Tray1 or the optional Tray2, see "Loading Paper" on page 2.6.

Using the Multi-Purpose Tray

Multi-Purpose Tray is located in the front of your printer. It can be closed when you are not using it, making the printer more compact.

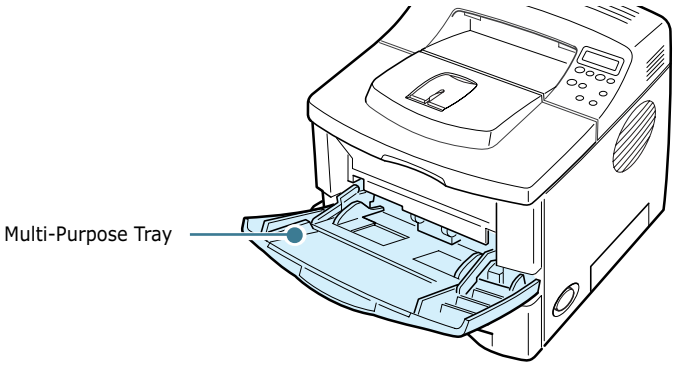

The Multi-Purpose Tray can hold several sizes and types of paper, such as transparencies, cards and envelopes. You may also want to use the Multi-Purpose Tray for single page print jobs on letterheads, coloured paper for use as separator sheets, or other special materials that you do not normally keep in the paper tray. You can load approximately 100 sheets of plain paper, 10 envelopes, 50 transparencies, 10 card stocks or 25 labels at a time.

- Load only one size of print material at a time in the Multi-Purpose Tray.
- To prevent paper jams, do not add paper when there is still paper in the Multi-Purpose Tray. This also applies to other types of print materials.
- Print materials should be loaded face up with the top edge going into the Multi-Purpose Tray first and be placed on the centre of the tray.
- Do not place objects on the Multi-Purpose Tray. Also avoid pressing down or applying excessive force on it. The tray may fall apart from the printer.

To load paper in the Multi-Purpose Tray:

1 Pull the Multi-Purpose Tray down towards you.

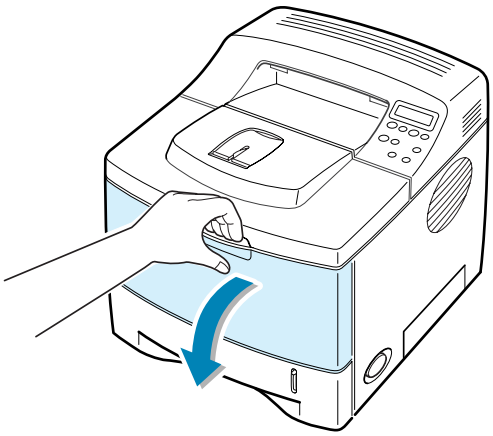

2 Slide the extender to extend the tray to its full-length position to hold longer paper.

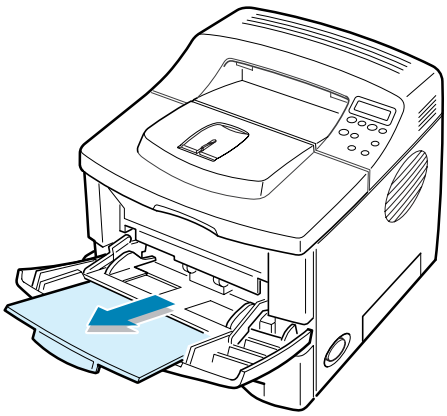

3 Prepare a stack of paper for loading by flexing or fanning them back and forth. Straighten the edges on a level surface.

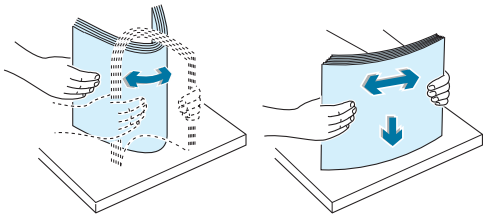

4 Place paper on the centre of the tray **with the print side face up**.

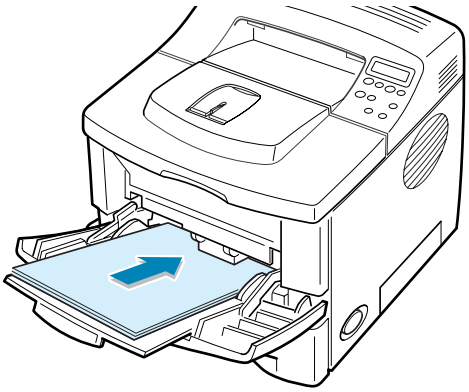

If you want to print on previously printed paper from the Multi-Purpose Tray, the printed side should be facing down with an uncurled edge to the printer. If you experience problems with paper feed, turn the paper around.

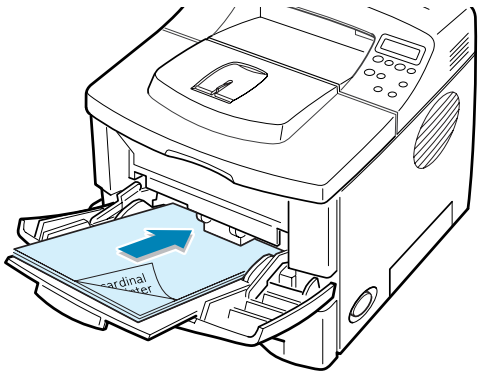

NOTE: Make sure that you have not loaded too much print materials. The print material buckles if you load a stack that is too deep or push it in too far.