Troubleshooting PS Errors

The following situations are PS language specific and may occur when several printer languages are being used.

NOTE: To receive a printed or screen displayed message when PS errors occur, open the Print Options window and click the desired selection next to the PostScript errors section.

Problem	Possible Cause	Solution
PostScript file can not be printed.	The PostScript option may not be installed.	• Print a configuration page and verify that the PS version is available for printing. • If PostScript is not available, install the PostScript option. See "Installing Memory and PostScript DIMMs" on page F.3.
"This job contains binary data..." message appears.	The pure binary data option is not supported by the PostScript driver.	Open the Properties of the PostScript driver, click on **PostScript**, and click on **Advanced**. The pure binary data option is not supported. Choose another.
A PS error page prints.	Print job may not be PS.	Make sure that the print job is a PS job. Check to see whether the software application expected a setup or PS header file to be sent to the printer.
The optional Tray2 is not selected in the driver.	The printer driver has not been configured to recognise the optional Tray2.	Open the PostScript driver properties and set the **Tray2** item of the **Device option** to **Installed**.

Common Linux Problems

Problem	Possible Cause and Solution
I can't change settings in the configuration tool.	You need to have administrator privileges to be able to affect global settings.
I am using the KDE desktop but the configuration tool and LLPR won't start.	Maybe you do not have the GTK libraries installed. These usually come with most Linux distributions, but you may have to install them manually. Refer to your distribution's installation manual for more details about installing additional packages.
I just installed this package but can't find entries in the KDE/Gnome menus.	Some versions of the KDE or GNOME desktop environments may require that you restart your session for the changes to take effect.
I get a "Some options are not selected" error message while editing the printer settings.	Some printers have conflicting settings, meaning that some settings for two options can't be selected at the same time. When you change a setting and the Printer Package detects such a conflict, the conflicting option is changed to a "No Choice" value, and you have to choose an option that does not conflict before being able to submit the changes.
I can't make a printer the system default.	In some conditions, it may not be possible to change the default queue. This happens with some variants of LPRng, especially on recent RedHat systems that use the "printconf" database of queues. When using printconf, the /etc/printcap file is automatically refreshed from the database of printers managed by the system (usually through the "printtool" command), and the queues in /etc/printcap.local are appended to the resulting file. Since the default queue in LPRng is defined as the first queue in /etc/printcap, therefore it is not possible for the Linux Printer Package to change the default when some queues have otherwise been defined using printtool. LPD systems identify the default queue as the one named "lp". Thus, if there is already a queue by this name, and if it doesn't have any alias, then you won't be able to change the default. To work around this, you can either delete the queue or rename it by manually editing the /etc/printcap file.
The N-up setting does not work correctly for some of my documents.	The N-up feature is achieved through post-processing of the PostScript data that is being sent to the printing system. However, such post-processing can only be adequately achieved if the PostScript data conforms to the Adobe Document Structing Conventions. Problems may arise when using N-up and other features relying on post-processing if the document being printed isn't compliant.

Problem	Possible Cause and Solution
I am using BSD lpr (Slackware, Debian, older distributions) and some options chosen in LLPR don't seem to take effect.	Legacy BSD lpr systems have a hard limitation on the length of the option string that can be passed to the printing system. As such, if you selected a number of different options, the length of the options may be exceeded and some of your choices won't be passed to the programmes responsible for implementing them. Try to select less options that deviate from the defaults, to save on memory usage.
I am trying to print a document in Landscape mode, but it prints rotated and cropped.	Most Unix applications that offer a Landscape orientation option in their printing options will generate correct PostScript code that should be printed as is. In that case, you need to make sure that you leave the LLPR option to its default Portrait setting, to avoid unwanted rotations of the page that would result in a cropped output.
Some pages come out all white (nothing is printed), and I am using CUPS.	If the data being sent is in Encapsulated PostScript (EPS) format, some earlier versions of CUPS (1.1.10 and before) have a bug preventing them from being processed correctly. When going through LLPR to print, the Printer Package will work around this issue by converting the data to regular PostScript. However, if your application bypasses LLPR and feeds EPS data to CUPS, the document may not print correctly.
I can't print to a SMB (Windows) printer.	To be able to configure and use SMB-shared printers (such as printers shared on a Windows machine), you need to have a correct installation of the SAMBA package that enables that feature. The "smbclient" command should be available and usable on your system.
My application seems to be frozen while LLPR is running.	Most Unix applications will expect a command like the regular "lpr" command to be non-interactive and thus return immediately. Since LLPR is waiting for user input before passing the job on to the print spooler, very often the application will wait for the process to return, and thus will appear to be frozen (its windows won't refresh). This is normal and the application should resume functioning correctly after the user exits LLPR.
How do I specify the IP address of my SMB server?	It can be specified in the "Add Printer" dialogue of the configuration tool, if you don't use the CUPS printing system. Unfortunately, CUPS currently doesn't allow to specify the IP address of SMB printers, so you will have to be able to browse the resource with Samba in order to be able to print.
Some documents come out as white pages when printing.	Some versions of CUPS, especially those shipped with Mandrake Linux before the 8.1 release, have some known bugs when processing the PostScript output from some applications. Try upgrading to the latest version of CUPS (at least 1.1.14). Some RPM packages for most popular distributions are provided as a convenience with this Linux Printing Package.

Problem	Possible Cause and Solution
I have CUPS and some options (such as N-up) seem to be always enabled even though I don't pick them in LLPR.	There may be some local options defined in your ~/.lpoptions file, which is manipulated by the lpoptions command. These options will always be used if not overridden by LLPR settings. To get rid of all options for a printer, run the following command, replacing "printer" with the name of the queue: lpoptions -x printer
I configured a printer to print to a file, but I get "Permission denied" errors.	Most printing systems will not run as the super-user but as a special user (usually "lp"). Therefore, make sure that the file you have chosen to print to is accessible to the user owning the spooler daemon.
On my PCL (or SPL) printer, I sometimes get error messages printing instead of my document.	Unfortunately, some Unix applications may generate non-compliant PostScript output that may not be supported by Ghostscript, or even the printer itself in PostScript mode. You can try to capture the output to a file and view the results with Ghostscript (gv or ghostview will allow you to do so interactively) and see if you get error messages. However, since the application is at probably fault, contact your software vendor to inform them of the issue.

Common DOS Problem

7

Problem	Possible Cause and Solution
When using the printer in EPSON Dot Printer Environment, sometimes I can not get the output I want.	Change the emulation to EPSON in the **Config** tab in the Remote Control Panel. For detailed information about selecting printer settings in the Remote Control Panel, see page D.4.

MEMO

A

Using Your Printer with a Macintosh

Your printer supports Macintosh systems with a built-in USB interface or 10/100 Base-TX network interface card (option for ML-2550). When you print a file from a Macintosh computer, you can use the Samsung SPL II driver to support your printer's major printing features. You can also use PostScript driver by installing the PPD file.

This chapter includes:

- **Installing Software for Macintosh**
- **Creating a Desktop Printer**
- **Printing a Document**
- **Using Advanced Printing Features**

Installing Software for Macintosh

The CD-ROM that came with your printer provides you with the SPL printer driver and the PPD file to use the PS driver, Apple LaserWriter driver, for printing on a Macintosh computer.

Refer to the table below for the driver available for your printer and system requirements.

Your Printer	Available Driver	Connection	System Requirements
ML-2550	SPL driver	USB interface (see page 2.11)	Mac OS 8.6 and G3 processor or higher
ML-2551N/ ML-2552W	• SPL driver • PS driver	USB interface (see page 2.11)	Mac OS 8.6 and G3 processor or higher
		Network interface (see page 2.12)	Mac OS 7.5 and 7200 processor or higher

NOTES:

- If you are a ML-2550 user, you need to install the optional PS DIMM (see page F.3) for using the PS driver.
- Please refer Samsung homepage for MAC OS 10.x Printer Driver. Samsung homepage : www.samsungprinter.com

1. Turn on your computer and printer.
2. Insert the CD-ROM which came with your printer into the CD-ROM drive.
3. Double-click **SAMSUNG_LBP** on your Macintosh desktop.
4. Double-click the **West** folder.
5. Double-click the **Samsung Laser Printer Installer** icon next to each language to select the correct one.
6. Click **Continue**, and then click **Continue**.

7 The Samsung Laser Printer Installer window opens. Select the installation type.

The window provides two options for software installation:

- **Easy Install** (recommended method): This option loads the PPD file and installs the SPL driver.
- **Custom Install**: This option allows you to choose which components will be installed, the SPL II driver, the PS Level 3 PPDs and the Adobe Acrobat Reader programme for opening the User's Guide.

8 Click **Install**.

If other programmes are operating, the alert message appears. Click **Continue** to install the software, or click **Cancel** and close other programmes, and install the software.

9 After the installation is completed, click **Restart**.

Creating a Desktop Printer

After installing print software, you need to create a desktop printer for using your printer. Depending on the connection you are using, the procedure differs.

Creating a Desktop Printer for the SPL Driver

1. From the **Apple** menu, select **Chooser**.
2. From the left pane of the Chooser window, click **SAMSUNG SPL II**. Then your printer name will appear in thee right pane of the Chooser window.
3. Click your printer name, and close the window.
4. The message box indicating that you have changed your current printer appears. Click **OK**.
5. A SAMSUNG SPL II printer icon will be created on your desktop.

Creating a Desktop Printer for the PS Driver

For a USB-connected Macintosh

1. Open **Macintosh HD** and double-click **Application**.
2. Double-click **Utilities**.
3. Double-click **Desktop Printer Utility**.

NOTE: The position of Desktop Printer Utility may vary depending to the MAC OS.

4. Select **LaserWriter 8**, and select **Printer (USB)** in the list box. Then click **OK**.

5 Click **Change** in the USB Printer Selection section. The name of your printer appears in the list.

6 Click **ML-2550**, and click **OK**.

7 Click **Auto Setup** in the PostScript Printer Description (PPD) File section.

If Auto Setup does not work properly, click **Select PPD** and choose **Samsung ML-2550 Series**.

8 When the setup is completed, click **Create**.

9 Click **Save**.

For a Network-connected Macintosh

1 From the **Apple** menu, select **Chooser**.

2 Click **LaserWriter 8** (the PostScript driver provided with your Macintosh).

The name of your printer appears in the list.

3 Select **SEC000xxxxxxxxx** from the printer box (where the xxxxxxxxx varies depending on each of the products).

4 When the setup is completed, you see your printer icon is created as a desktop printer.

If Auto Setup does not work properly, click **Select PPD**, choose **SAMSUNG ML-2550 Series** and click **OK**.

A

Printing a Document

When you print with a Macintosh, you need to check the printer software setting in each application you use. Follow these steps to print from a Macintosh:

1. Open a Macintosh application and select a file you want to print.

2. Open the **File** menu and click **Page Setup** (**Document Setup** in some applications).

3. Choose your paper size, orientation, paper type and other options and click **OK**.

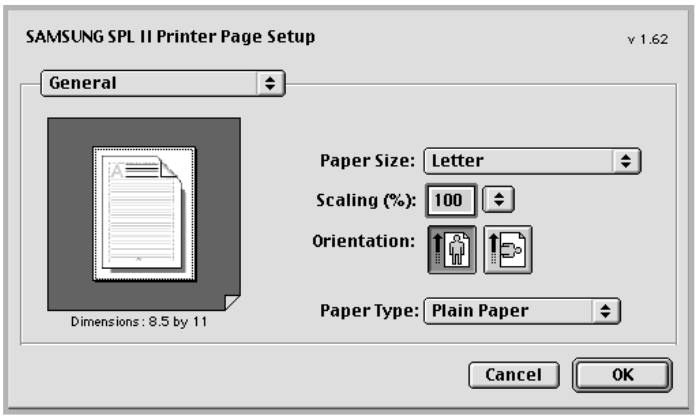

Choose **Watermark** to add a watermark to each page in your document to emphasize its purpose or indicate how it should be handled. For details on the watermark options, see page 5.18.

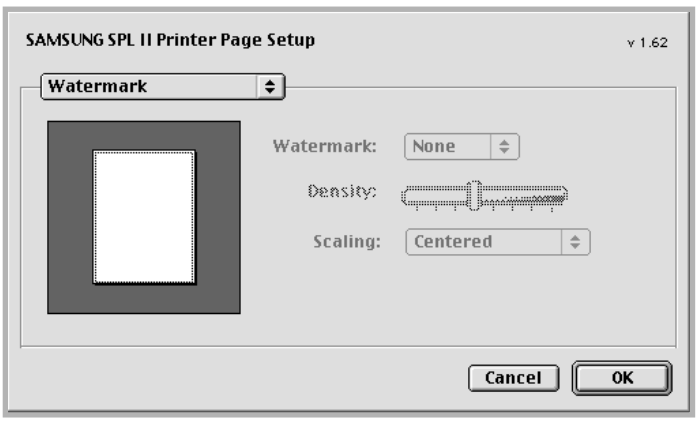

- Mac OS 9.1 doesn’t support the Watermark feature.

4 Open the **File** menu and click **Print**. You will see the SAMSUNG SPL II Printer window.

If you are using the PS driver, the LaserWriter 8 driver window appears.

5 Choose the number of copies and indicate which pages you want to print.

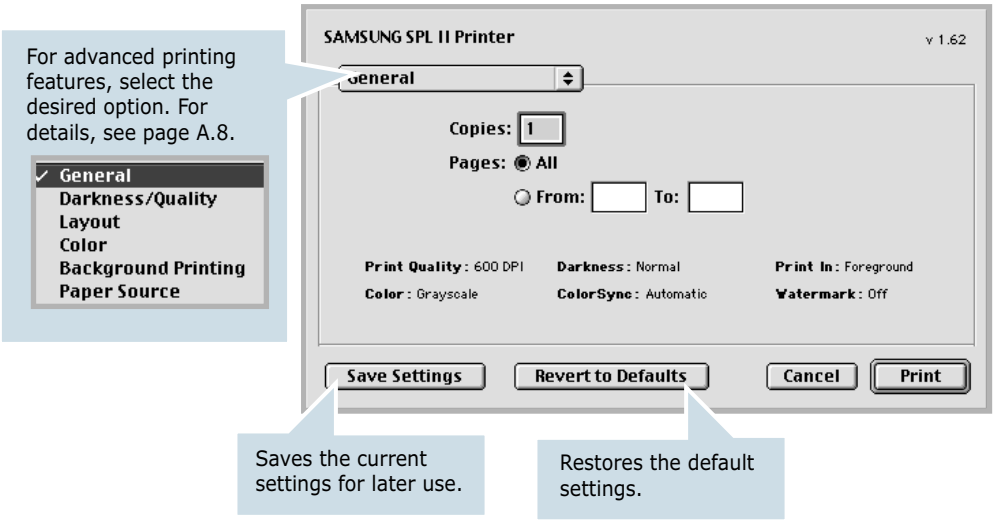

6 Click **Print** when you finish setting the options.

A

Using Advanced Printing Features

The SAMSUNG SPL II Printer window contains five categories of advanced properties. Listed below is the name of each property.

- Darkness/Quality
- Layout
- Color
- Background Printing
- Paper Source

Figures below display each property in the SAMSUNG SPL II Printer window.

Darkness/Quality

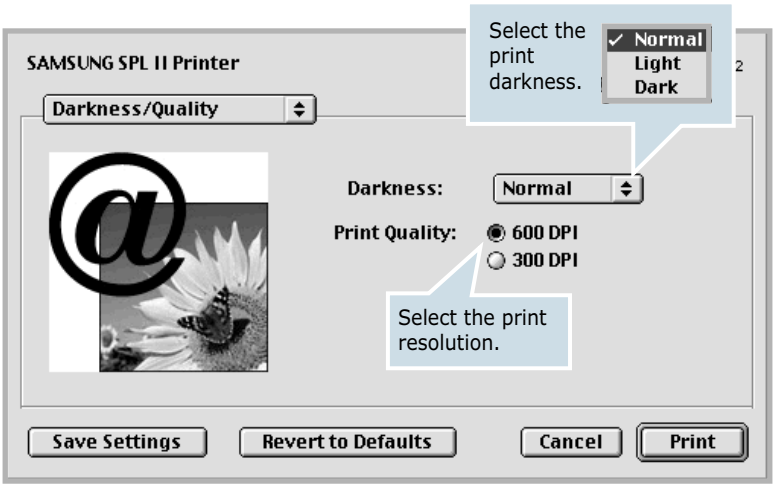

Layout

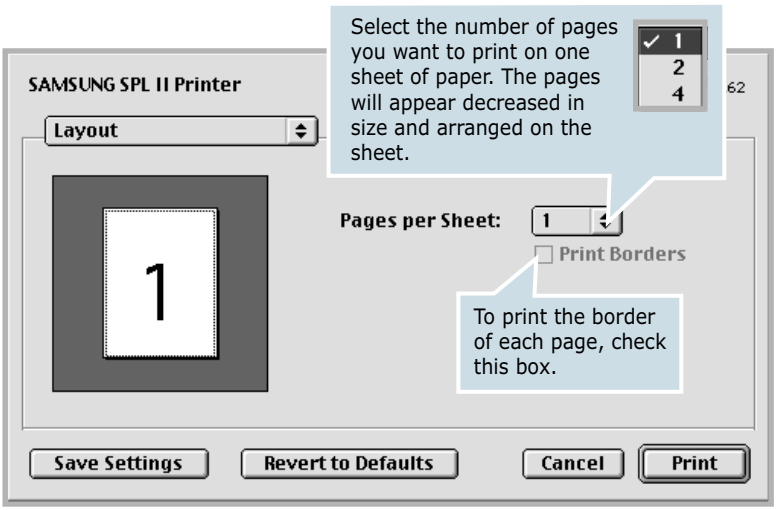

Color

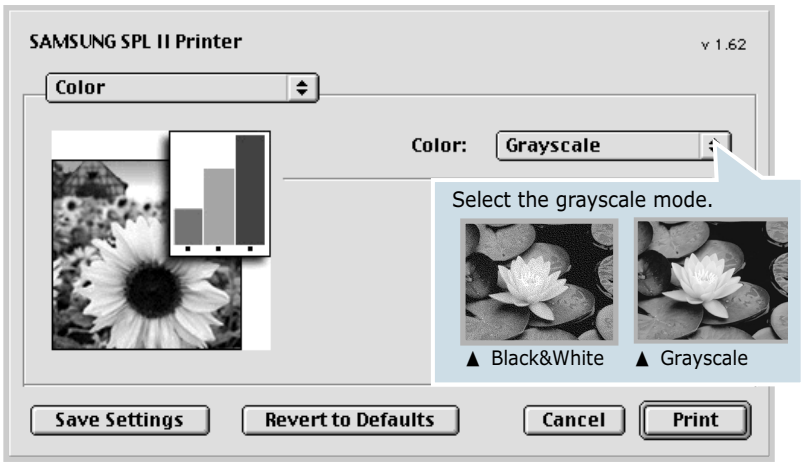

Background Printing

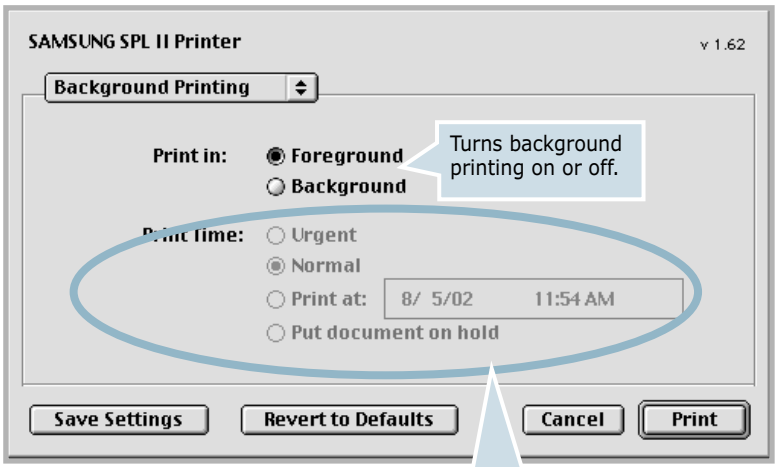

Select a priority for your print job in the queue of jobs waiting to print, click one of the following:

- **Urgent**: to print before any Normal priority job.
- **Normal**: to print in the order the job is received.
- **Print at**: to print at the specific time you enter in the day and time in the fields to the right.
- **Put document on hold**: to hold the print job in the print queue until you are ready to release it.

A

Paper Source

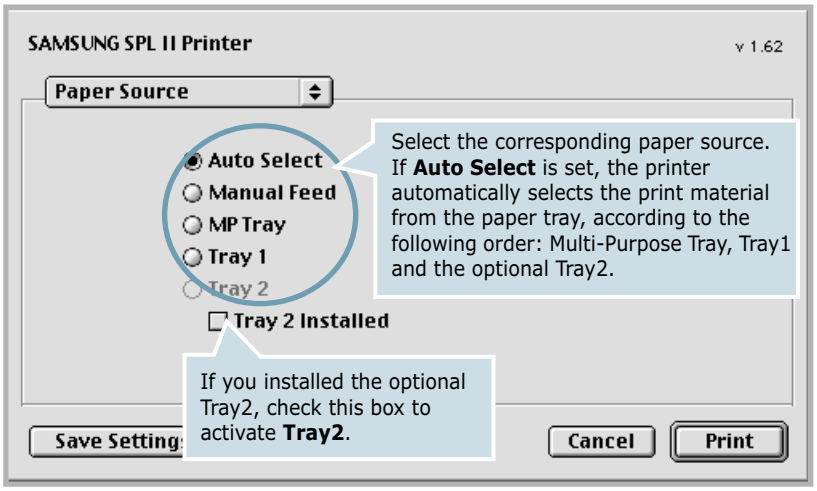

B Using Windows PostScript Driver

If you want to use the PostScript driver provided with your system CD-ROM to print a document, use the information on this Appendix.

This chapter includes:

- **Installing PPD Files**
- **Using PS Printer Driver Features**

Note: If you are a ML-2550 user, you need to install an optional PS DIMM for using the PostScript driver. For more information, see Appendix F,"Programme Installing Printer Options."

Installing PPD Files

PPDs, in combination with the PostScript driver, access the printer features and allow the computer to communicate with the printer. An installation programme for the PPDs is provided on the supplied software CD-ROM.

NOTE:

- Installing the PostScript printer driver in Windows 9x/Me/NT 4.0 may require the use of the operating system files on the original CD-ROM that came with your system.
- If you have a PostScript 3 driver in Windows 9x/Me/NT 4.0 and want to use it, you must install the PostScript 3 PPD which is also provided on the CD-ROM.

Before installing PPD files, make sure that the printer and the PC are properly connected with parallel, USB or network interface. For information about:

- connecting with the parallel interface, see page 2.10.
- connecting with the USB interface, see page 2.11. For Windows 98/Me, the USB driver must be installed. See page 2.20.
- connecting with a network interface, see page 2.12. For a ML-2550, you need to install an optional network interface card; see "Installing a Network or Serial Interface Card" on page F.6.

In Windows 95/98/Me

1. Place the CD-ROM in the CD-ROM drive. Installation will start automatically.

   If the CD-ROM drive does not automatically run:

   Select **Run** from the **Start** menu, type **x:\cdsetup.exe** in the Open box (where x is the drive letter for the CD-ROM drive) and click **OK**.

2. Select the appropriate language.

   If you can't find the desired language from the screen, use the scroll button on the bottom right of the window to display more languages.

3. Click **Install the Samsung Software-II on your PC (PostScript)**.

4 Click **Next**.

5 Select **Local Printer** and click **Next**.

6 Click on **Have Disk**, and then choose:

- for Windows 95/98, **x:\ML-2550\PS_DRV\ AddPrint\ English** (or the desired language)**\Win9598\level2**
- for Windows Me, **x:\ML-2550\PS_DRV\ AddPrint\ English** (or the desired language)**\WinME\level2**

(where x is the drive letter for the CD-ROM drive)

7 Click **OK**.

8 When **Samsung ML-2550 Series PS** appears in the Printers list, click **Next**.

NOTE: If you are prompted to insert the Windows CD-ROM, insert the CD-ROM that came with your Windows into the CD-ROM drive. Follows the instructions on the screen.

9 Select the port you want use and click **Next**.

10 Click **Next**.

11 When a window prompting to print a test page appears, select **Yes** or **No** and click **Finish**.

12 If you select **Yes** in Step 11, the printer prints a test page. When the page prints out properly, click **Yes**.

13 When the installation is completed, click **Finish**.

In Windows NT 4.0

1 Follow steps from 1 to 4 in "In Windows 95/98/Me" on page B.2.

2 Select the port you want use and click **Next**.

3 Click on **Have Disk**, and then choose **x:\ML-2550\ PS_DRV\ AddPrint\ English** (or the desired language)**\ WinNT\level2**. Click **OK**.

NOTE: If you are prompted to insert the Windows CD-ROM, insert the CD-ROM that came with your Windows into the CD-ROM drive. Follows the instructions on the screen.

4 When **Samsung ML-2550 Series PS** appears in the Printers list, click **Next**.

5 Click **Next**.

6 When a window prompting to print a test page appears, select **Yes** or **No** and click **Finish**.

7 If you select **Yes** in Step 6, the printer prints a test page. When the page prints out properly, click **Yes**.

8 When the installation is completed, click **Finish**.

In Windows 2000/XP

1 Follow steps from 1 to 4 in "In Windows 95/98/Me" on page B.2.

2 When the installation is completed, click **Finish**.

Reinstalling the PS Driver (Windows 2000/XP)

1 From the **Start** menu, select **Programs**.

2 Select **Samsung ML-2550 Series**, and then **Samsung ML-2550 Series PS Driver Maintenance**.

The Samsung ML-2550 Series PS Driver Maintenance window appears.

3 Check **Repair** and then click **Next**.

4 Click **Finish**.

Uninstalling the PS Driver

In Windows 9x/Me/NT 4.0

1. From the **Start** menu, select **Programs**.
2. Select **Samsung ML-2550 Series**, and then **Uninstall Samsung ML-2550 Series PS Driver**.
3. When you are asked to confirm your selection, click **OK**.

   The Samsung ML-2550 Series PS driver and all of its components are removed from your computer.
4. Click **Finish**.

In Windows 2000/XP

1. From the **Start** menu, select **Programs**.
2. Select **Samsung ML-2550 Series**, and then **Samsung ML-2550 Series PS Driver Maintenance**.

   The Samsung ML-2550 Series PS Driver Maintenance window appears.
3. Check **Remove** and then click **Next**.
4. When you are asked to confirm your selection, click **OK**.

   The Samsung ML-2550 Series PS driver and all of its components are removed from your computer.
5. Click **Finish**.

Using PS Printer Driver Features

Certain printer features are not available in this PS driver. For details about the features, refer to Chapter 5,"Printing Tasks."

The printer automatically switches between PS and SPL printer languages depending on the driver you have selected.

Accessing Printer Properties

The properties window for the Windows PostScript printer driver can be opened from the Printers folder or an application.

To open the properties window from the Printer folder:

1. Click the Windows **Start** button.
2. Select **Settings** then **Printers** to open the Printers window.
3. Select **Samsung ML-2550 Series PS**.
4. Click the right mouse button and select **Properties** to open the properties window.

To open the properties window from an application:

1. From the **File** menu, select **Print** to open the Print window.
2. Make sure that **Samsung ML-2550 Series PS** is selected in the **Name** drop-down list.
3. Click **Properties** to open the properties window.

C USING YOUR PRINTER IN LINUX

You can use your printer in a Linux environment.

This chapter includes:

- **Installing the Printer Driver**
- **Using the Configuration Tool**
- **Changing LLPR Properties**

Installing the Printer Driver

System Requirements

Supported OS

- Redhat 6.2/7.0/7.1 and above
- Linux Mandrake 7.1/8.0 and above
- SuSE 6.4/7.0/7.1 and above
- Debian 2.2 and above
- Caldera OpenLinux 2.3/2.4 and above
- Turbo Linux 6.0 and above
- Slackware 7.0/7.1 and above

Recommended Requirements

- Pentium II or Power PC G3
- RAM 64 MB or higher
- HDD 20 MB or higher

Softwares

- Glibc 2.1 or higher
- GTK+ 1.2 or higher
- GhostScript

Installing the Printer Driver

1. Make sure that you connect the printer to your computer. Turn both the computer and the printer on.

2. When the Administrator Login window appears, type in "**root**" in the Login field and enter the system password.

NOTE: You must log in as a super user (root) to install the printer software. If you are not, ask your system administrator.

3 Insert the printer software CD-ROM. The CD-ROM automatically runs.

NOTE: If the CD-ROM does not automatically run, click the icon at the bottom of the window. When the Terminal screen appears, type in:
[root@local /root]# **cd /mnt/cdrom** (the CD-ROM directory)
[root@local cdrom]# **./setup.sh**

4 Select the installation type, either **Recommended** or **Expert**, and then click **Continue**.

Recommended is fully automated and is not required any interaction. **Expert** installation allows you to select the install path or printing system.

5 If you selected **Recommended**, go to Step 6.

For **Expert**, select the desired option and then click **Begin Install**.

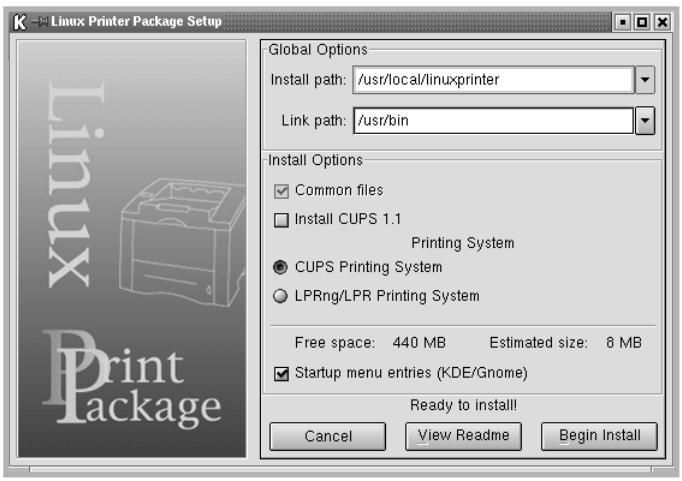

C

6 The printer driver installation begins. When the installation is completed, click **Start**.

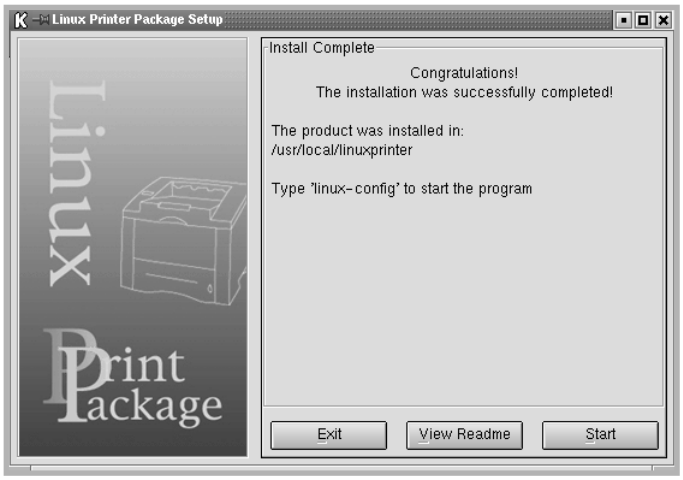

7 The Linux Printer Configuration window opens. Click the **Add Printer** icon on the tool bar at the top of the window.

NOTE: Depending on the printing system in use, the Administrator Login window may appear. Type in "**root**" in the Login field and enter the system password.

8 You see the printers currently added in your system. Select the printer you will use. The function tabs available for the selected printer appear at the top of the Add a Printer window.

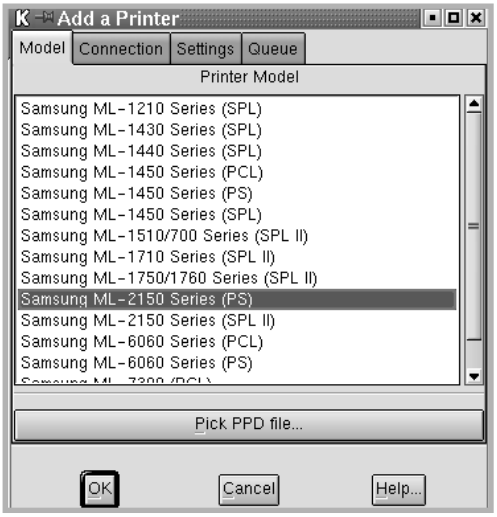

NOTE: If the printer supports PS printing, it is recommended to select the PS driver.

9 Click the **Connection** tab and ensure that the printer port is set properly. If not proper, change the device setting.

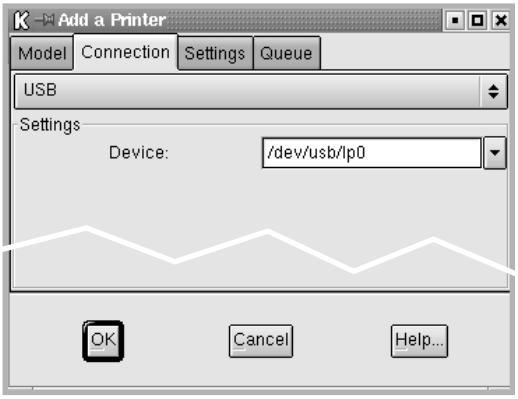

10 You can use the **Settings** tab and the **Queue** tab to view the printer's current setting. If necessary, you can change the settings.

NOTE: The options may differ depending on the printer in use. The Description and the Location field in the Queue screen may not appear depending on the printing system in use.

11 To exit, click **OK**.

12 When the window prompts that the new printer is successfully configured, click **OK**.

13 The Linux Printer Configuration window re-appears. From the **Info** tab, you can view the information about your printer. If necessary, you can change the printer configuration. For details about changing the printer configuration, see "Using the Configuration Tool" on page C.8.

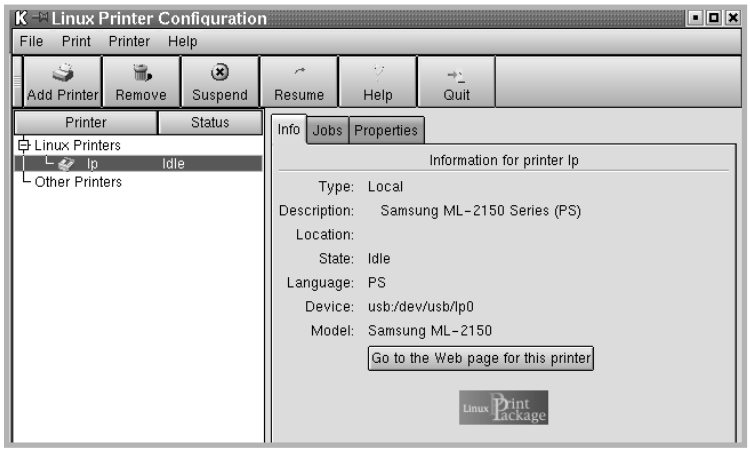

C

Changing the Printer Connection Method

If you change the printer connection method from USB to parallel or vice versa while in use, you must re-configure your Linux printer by adding the printer in your system. Take the following steps:

1. Make sure that you connect the printer to your computer. Turn both the computer and the printer on.

2. When the Administrator Login window appears, type in "**root**" in the Login field and enter the system password.

NOTE: You must log in as a super user (root) to install a new printer to the printing system. If you are not, ask your system administrator.

3. From the Startup Menu icon at the bottom of the desktop, select **Linux Printer** and then **Configuration Tool**.

   You can also access the Linux Printer Configuration window by typing in "**linux-config**" from the Terminal screen.

4. When the Linux Printer Configuration window appears, click the **Add Printer** icon on the tool bar at the top of the window.

5. Click the **Connection** tab at the top of the Add a Printer window.

   Ensure that the printer port is set properly. If not proper, change the device setting.

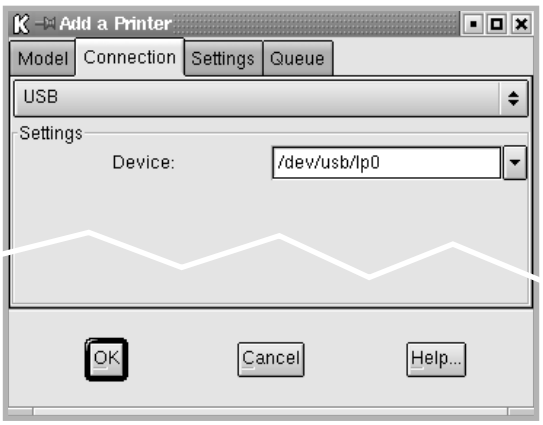

6. Click **OK**.

Uninstalling the Printer Driver

1 From the Startup Menu icon at the bottom of the desktop, select **Linux Printer** and then **Configuration Tool**.

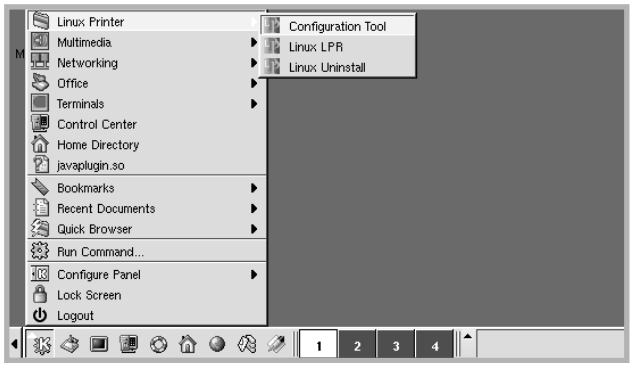

You can also access the Linux Printer Configuration window by typing in "**linux-config**" from the Terminal screen.

2 In the Linux Printer Configuration window, select the **Uninstall** command from the **File** menu.

3 The Administrator Login window appears. Type in "**root**" in the Login field and enter the system password. Click **Proceed**.

NOTE: You must log in as a super user (root) to uninstall the printer software. If you are not, ask your system administrator.

4 The message window which is asking your confirmation to proceed with the uninstallation appears. Click **Yes**.

5 Select **Complete uninstall** and then click **Uninstall**.

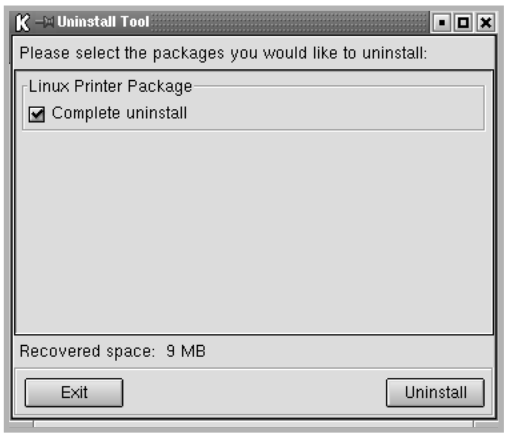

C

6 Click **OK** to begin uninstallation.

7 When the uninstallation is completed, click **Finished**.

Using the Configuration Tool

The configuration tool allows the administrative tasks, including adding and removing new printer, and changing their global settings. Regular users can also run it to easily inspect job queues, examine the printer properties and changing their local preference.

To access the Configuration Tool:

1 From the Startup Menu icon at the bottom of the screen, select **Linux Printer** and then **Configuration Tool**. The Linux Printer Configuration window appears.

You can also open this window from the Terminal screen by typing in "**linux-config**."

2 The Linux Printer Configuration window shows a list of installed printers at the left pane. The right pane shows a number of tabs that display information regarding the currently selected printer.

Select your printer, if not currently selected.

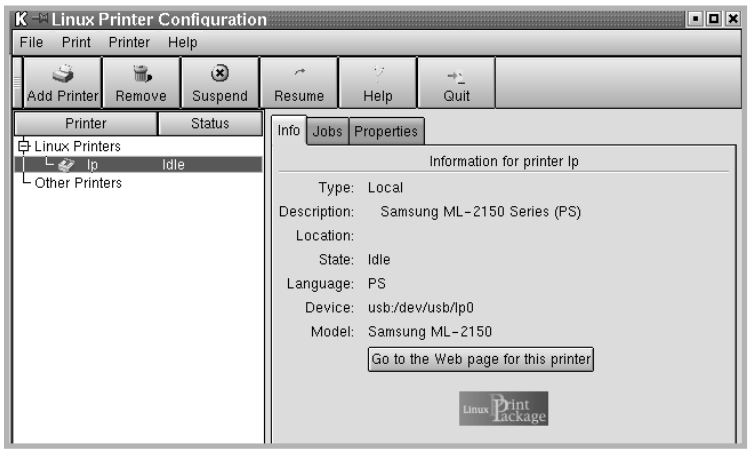

3 The **Info** tab shows general information about the printer.

If you are an Internet user, you can click **Go to the Web page for this printer** to access the web page.

Click the **Job** tab to inspect and manage the job queue for the selected printer. You can suspend, resume or delete a specific job(s) in the queue. If you drag a specific job(s), you can drop it into the print queue of another printer.

The **Properties** tab allows you to change the default printer settings.

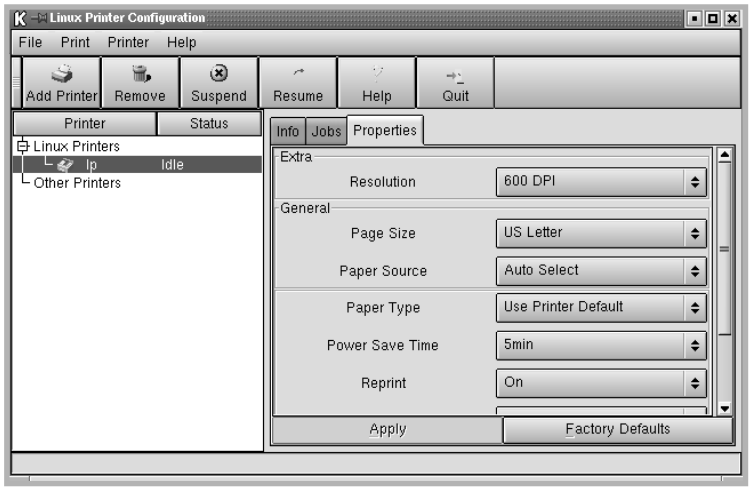

NOTE: Regular users are able to override the system-wide default settings defined by the administrator. When a regular user clicks **Apply**, these custom settings will be saved in the user's profile and may be later used with LLPR. If the administrator is running the configuration tool, then the settings will be saved as the new global defaults.

C

Changing LLPR Properties

You can fine tune the printer's properties by opening the LLPR Properties window.

To open the LLPR Properties window:

1 From the application you are using, select the **Print** command.

2 When the Linux LPR window opens, click **Properties**.

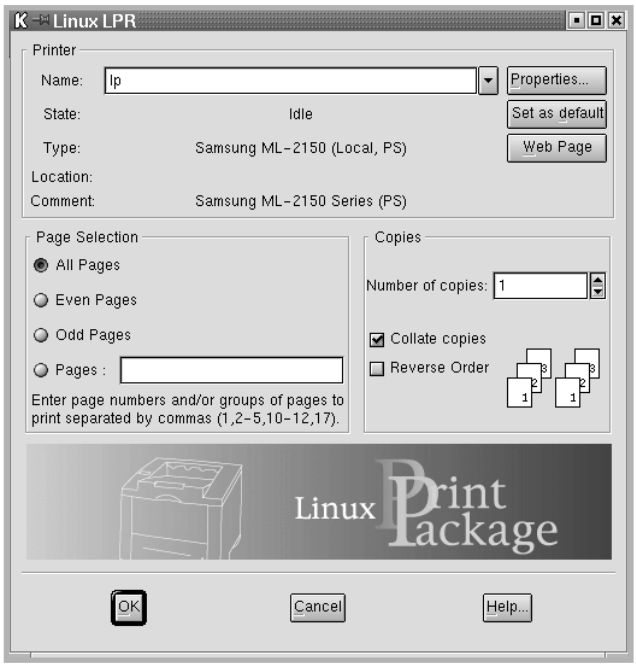

You can also open the LLPR window by using the following:

- Click the Startup Menu icon at the bottom of the screen and select **Linux Printer** and then **Linux LPR**.
- If the Linux Printer Configuration window is currently open, select **Test Print** from the **Print** menu.

3 The LLPR Properties window opens.

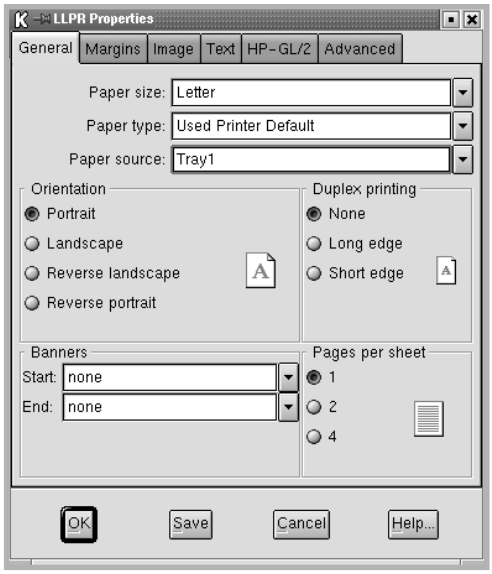

You will see the following six tabs at the top of the window:

- **General** - allows you to change the paper size, the paper type, the paper source, the orientation of the documents, enable duplex feature, add start and end banners, and change the number of pages per sheet.
- **Margins** - allows you to specify the page margins. The graphics on the right shows the current settings. These margins do not apply when printing regular PostScript data.
- **Image** - allows you to set image options that will be used when printing images files, i.e. when a non-PostScript document is passed to LLPR on the command line. But colour settings will also take effect for postscript documents.
- **Text** - allows you to select the density of the text and turn the syntax colouring on or off.
- **HP-GL/2** - allows you to set default options to print documents of the HP-GL/2 format, which is used by some plotters.
- **Advanced** - allows you to override the default settings for the printer.

If you click the **Save** button at the bottom of the window, the options will be kept between LLPR session.

Use the **Help** button to view details about the options in the window.

4 To apply the options, click **OK** in the **LLPR Properties** window. You will return to the **Linux LPR** window. To start printing, click **OK**.

MEMO

D Printing From DOS Applications

While your printer is primarily a Windows printer, you can also print from a DOS software Programme using the Remote Control Panel utility provided in the supplied software CD-ROM.

This chapter includes:

- **About the Remote Control Panel**
- **Installing the Remote Control Panel**
- **Selecting Print Settings**

About the Remote Control Panel

DOS users have access to many printer features through specific DOS printer drivers; however, many software manufactures do not develop printer drivers for their software programmes. Your printer provides the software control panel for improved printer control when DOS printer drivers are not available or when certain print settings are not available through DOS software programmes.

NOTE: The printer's Remote Control Panel is not a printer driver. It should be used to set print settings that are not available through DOS software programmes. Printer drivers are supplied by the manufacturers of your DOS software programmes. If your DOS software Programme does not include a printer driver for your printer, contact the manufacturer of the software or use one of the alternate printer drivers.

Installing the Remote Control Panel

1. Place the CD-ROM in the CD-ROM drive. Installation will start automatically.

   If the CD-ROM drive does not automatically run:

   Select **Run** from the **Start** menu, type **x:\cdsetup.exe** in the Open box (where x is the drive letter for the CD-ROM drive) and click **OK**.

2. Select the appropriate language.

   If you can't find the desired language from the screen, use the scroll button on the bottom right of the window to display more languages.

3. Click **Install the Samsung Software-III on your PC (WinRCP)**.

4 Click **Next**.

The files are copied into the appropriate directory.

5 After the installation is completed, click **Finish**.

Uninstalling the Remote Control Panel

1 From the **Start** menu, select **Programs**.

2 Select **Samsung ML-2550 Series**, and then **Uninstall Remote Control Panel**.

3 Click **OK**.

The Samsung ML-2550 Series Remote Control Panel and all of its components are removed from your computer.

4 Click **Finish**.

Selecting Print Settings

You can use this Remote Control Panel to select print settings that may not be available on some DOS Programmes. Typically, duplicate print settings that are selected from a DOS software programme override the ones that are selected in the Remote Control Panel.

Starting the Remote Control Panel

1. From the **Start** menu, select **Programs**.

2. Select **Samsung ML-2550 Series** and then **Remote Control Panel**.

3. The Remote Control Panel window allows you to access all the information you need when using your printer. If necessary, click the other tabs on the top of the window to access other features.

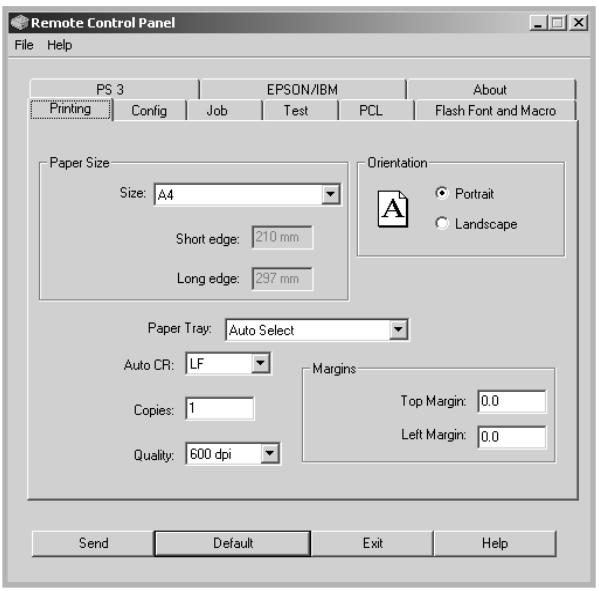

4. When you finish changing the settings, click **Send**.

Using the Remote Control Panel Tabs

The Remote Control Panel allows you to access the following features:

Printing Tab

In this tab, you can configure general settings for printing.

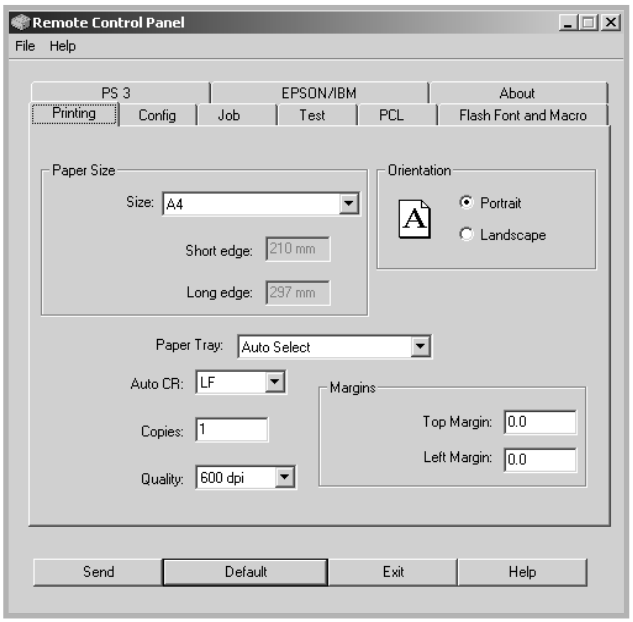

- **Paper Size** sets the paper size.
- **Orientation** determines how the output is printed on the page.
- **Paper Tray** sets the default paper source.
- **Auto CR** sets how the printer performs a carriage return.
- **Copies** sets the number of copies printed for each page.
- **Quality** specifies the print quality.
- **Margins** sets the top and left margin of the print material.

D

Config Tab

You can configure various printer features.

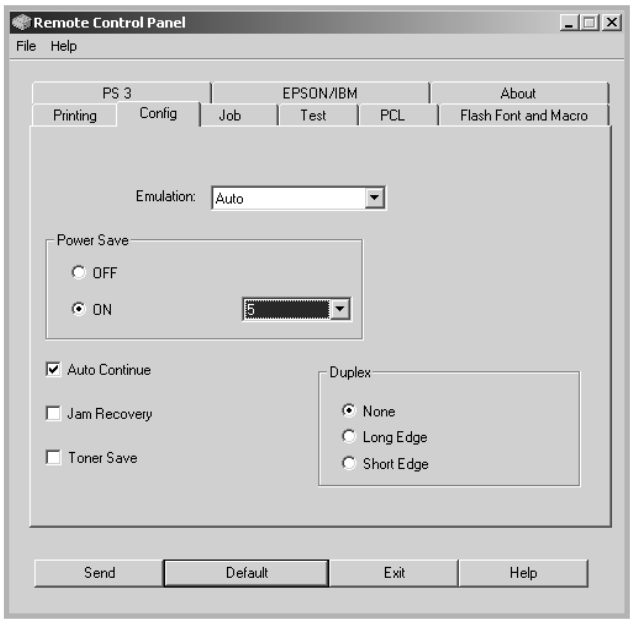

- **Emulation** selects the emulation for printing a document. The factory default is **Auto**.
- **Power Save** determines the length of time the printer waits after a job is printed before it goes to a reduced power state. If the printer is used frequently, select **OFF** which keeps the printer ready to print with the minimum warm-up time. This uses more power to keep the printer warm and ready to print.
- **Auto Continue** determines what action the printer should take if the Multi-Purpose Tray is empty when a manual feed print job is sent to the printer. If it is checked, the printer will pick up the paper from the tray after fifteen seconds. Otherwise, the printer will wait for you to load paper in the Multi-Purpose Tray.
- **Jam Recovery** determines what action the printer should take when a paper jam occurs. If it is unchecked, the printer does not reprint a page that has jammed. If it is checked, the printer keeps the image in memory for a printed page until the printer signals that the page has successfully printed. The printer reprints all jammed pages.
- **Toner save** determines the toner quantity the printer should use when printing. If it is checked, the printer conserves toner when printing. The default value is unchecked, which provides 100% usage.
- **Duplex** allows you to print on both sides of paper. For details, see page 5.11.

Job Tab

You can set options for improving the quality of your print job.

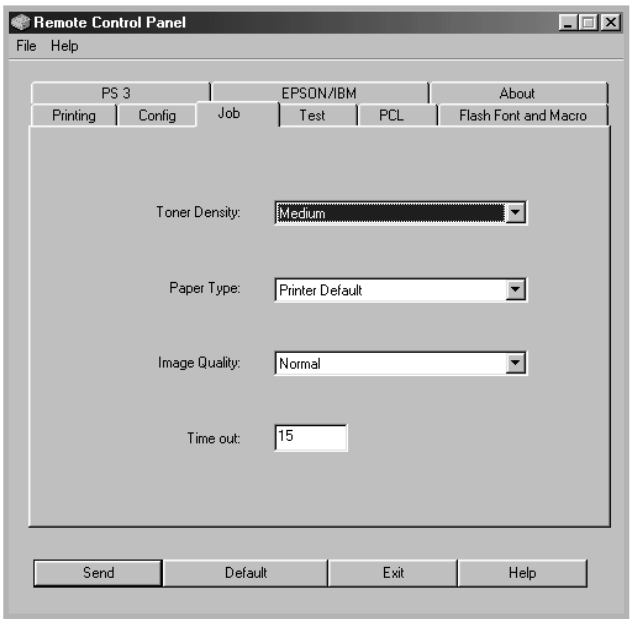

- **Toner Density** determines the toner density of page. The default value is **Medium**.
- **Paper Type** provides the printer with information about the type of paper to be used for a print job. For the best result, set this to the paper type you loaded in the tray of the printer. When using the plain paper, set this to **Printer Default**.
- **Image Quality** improves the print quality of your text and image and make the characters and images appear smoother. It is preset to **Normal** at the factory.
- **Time out** determins the amount of time (in seconds) the printer will wait before printing the last page of a print job that does not end with a command to print the page or a formfeed character. You can set from 0 to 300 seconds.

Test Tab

This tab allows you to print a resident page to test your printer's performance.

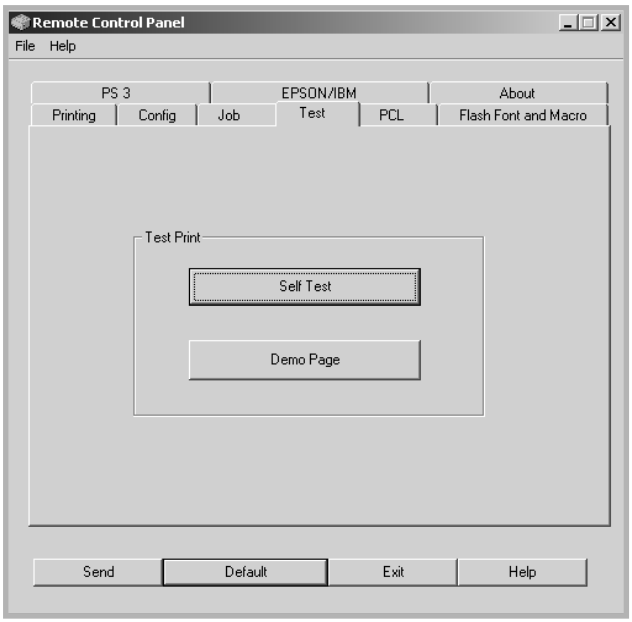

- **Self Test** prints a configuration sheet. A list of the user default settings and the amount of printer memory available prints.
- **Demo Page** prints a demonstration page. It shows the printer features and specifications.

PCL Tab

In this tab, you can configure various settings for PCL emulation.

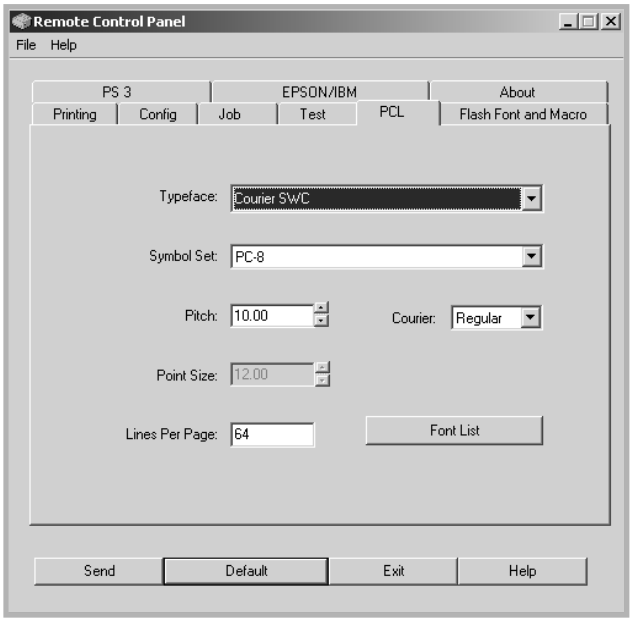

- **Typeface** allows you to select the desired typeface. This setting is ignored when the software application specifies a font.
- **Symbol Set** determines the symbol set. A symbol set is a set of alphabetic and numeric characters, punctuation, and special symbols used when printing with a selected font.
- **Pitch** sets the font pitch (only if you have selected a scalable monospaced font). Pitch refers to the number of fixed-space characters in one horizontal inch of type.
- **Point Size** sets the font point size (only if you have selected a scalable typographic font). Point size refers to the height of the characters in the font. One point equals approximately 1/72 of an inch. You can select point sizes from 4.0 to 999.75 in increments of 0.25 points.
- **Lines Per Page** sets the number of lines that print on each page. The setting can range from 5 to 128 lines per page.
- **Courier** determines the courier font type; **Regular** or **Dark**.
- **Font List** prints a font list showing all the fonts available for PCL emulation.

Flash Font and Macro Tab

This tab allows you to add fonts and macros to the Flash memory of the printer.

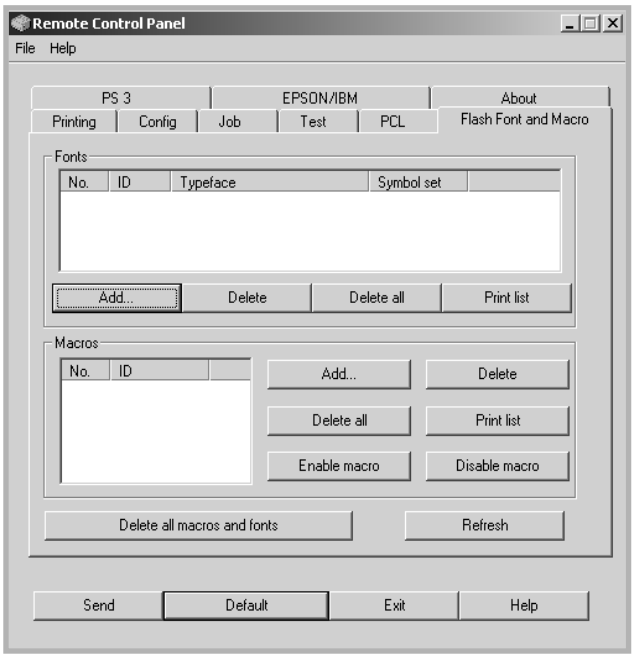

- **Fonts** adds or deletes fonts. You can also print the font sample list.
- **Macros** adds or deletes macros. You can also activate (**Enable macro**) or deactivate (**Disable macro**) them.
- **Delete all macros and fonts** deletes all macros and fonts in the flash memory.
- **Refresh** updates information about fonts and macros in the flash memory.

PS 3 Tab

You can configure various settings for PostScript 3 emulation.

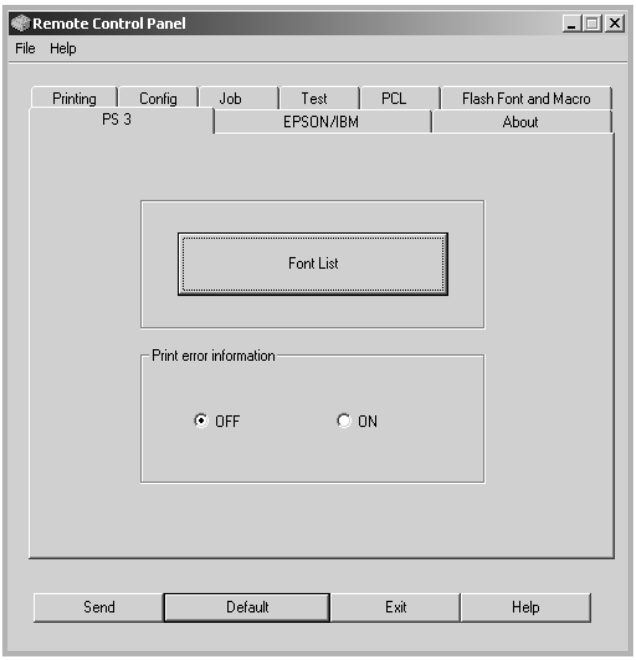

- **Font List** allows you to print the PS font sample list.
- **Print error information** determines whether or not the printer prints the error information page when an error occurs during processing the job. Select **ON** to print the page, otherwise select **OFF**.

D

EPSON/IBM Tab

You can configure various settings for EPSON/IBM emulation.

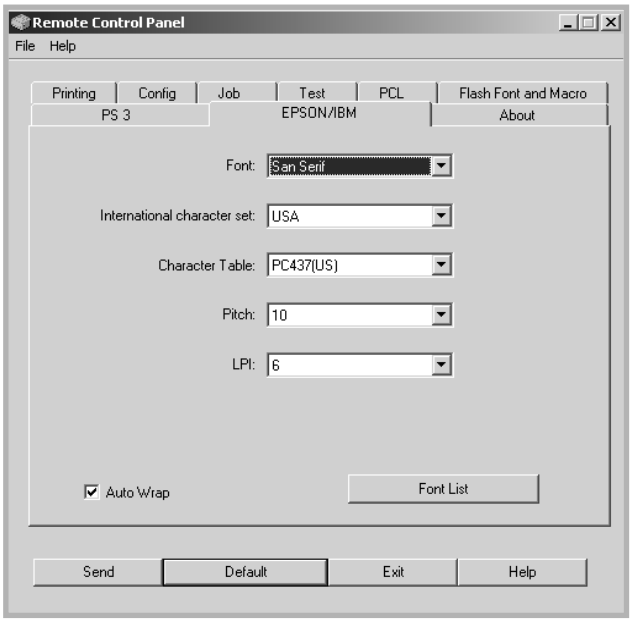

- **Font** allows you to select the desired font.
- **International character set** allows you to select a character set of the desired language.
- **Character Table** selects the character sets.
- **Pitch** sets the font pitch. Pitch refers to the number of fixed-space characters in a horizontal inch of type.
- **LPI** sets the number of lines printed a vertical inch. You can select 6 or 8 lines.
- **Auto Wrap** determines whether or not the printer automatically performs line feed when the data overflows the printable area of the print material.
- **Font List** prints a font list showing all the fonts available for EPSON emulation.

E Using Your Printer on a Network

If you work in a networked environment, the printer can be shared by other users on the network. ML-2551N and ML-2552W printers are network printers and can be connected to the network via direct attachment to an external print server.

This chapter includes:

- **About Sharing the Printer on a Network**
- **Setting Up a Locally Shared Printer**
- **Setting Up a Network-Connected Printer**

Note: If you are a ML-2550 user, you need to install an optional network interface card. For more information, see Appendix F, "Programme Installing Printer Options."

About Sharing the Printer on a Network

If you work in a networked environment, you can connect your printer to the network.

Locally-Shared Printer

You can connect the printer directly to a selected computer, which is called the "host computer" on the network. The printer can then be shared by other users on the network through a Windows 9x/Me/XP/NT 4.0/2000 network printer connection.

Network-connected Printer

ML-2551N and ML-2552W printers have the built-in network interface. For more information about connecting your printer to the network, see page 2.12.

To use a ML-2550 printer as a network printer, you need to install an optional network interface card in your printer. For a ML-2551N printer, you can replace the network interface card to one supporting the wireless LAN interface. See page F.6 for information about installing the card.

Printing Across a Network

Whether the printer is locally connected or network-connected, you need to install the ML-2550 series printer software on each computer that will print documents to the printer.

Setting Up a Locally Shared Printer

In Windows 9x/Me

Setting Up the Host Computer

1. Start Windows.
2. From the Start menu, select **Control Panel**, and double-click on the **Network** icon.
3. Check the **File and Print Sharing** box, and click **OK**. Close the window.
4. From the **Start** menu, select **Printers** from **Settings** and double-click your printer name.
5. Select **Properties** in the **Printer** menu.
6. Click the **Sharing** tab and check the **Shared As** box. Fill in the **Shared Name** field and click **OK**.

Setting Up the Client Computer

1. Right-click the Windows **Start** button and select **Explorer**.
2. Open your network folder in the left column.
3. Right-click the shared name and select **Capture Printer Port**.
4. Select the port you want, check the **Reconnect at log on box**, and click **OK**.
5. From the Start menu, select **Settings** and then **Printers**.
6. Double-click your printer icon.
7. From the **Printer** menu, select **Properties**.
8. From the **Details** tab, select the printer port and click **OK**.

In Windows NT 4.0/2000/XP

Setting Up the Host Computer

1. Start Windows.
2. For Windows NT 4.0/2000, select **Settings**, and **Printers** from the Start menu.

   For Windows XP, select **Printers and Faxes** from the Start menu.
3. Double-click your printer icon.
4. From the **Printer** menu, select **Sharing**.
5. For Windows NT 4.0, check the **Shared** box.

   For Windows 2000, check the **Shared As** box.

   For Windows XP, check the **Share this printer** box.
6. For Windows NT 4.0, fill in the **Share Name** field and click **OK**.

   For Windows 2000/XP, fill in the **Shared Name** field and click **OK**.

Setting Up the Client Computer

1. Right-click the Windows **Start** button and select **Explorer**.
2. Open your network folder in the left column.
3. Click the shared name.
4. For Windows NT 4.0/2000, select **Settings** and **Printers** from the **Start** menu.

   For Windows XP, select **Printers and Faxes** from the **Start** menu.
5. Double-click your printer icon.
6. From the **Printer** menu, select **Properties**.
7. From the **Ports** tab, click **Add Port**.

8 Select **Local port** and click **New Port**.

9 Fill in the **Enter a port name** field, enter the shared name.

10 Click **OK** and click **Close**.

11 For Windows NT 4.0, click **OK**.

For Windows 2000/XP, click **Apply** and click **OK**.

Setting Up a Network-Connected Printer

To use as your network printer, you have to set up the desired network protocols on the printer. Setting protocols can be accomplished by using the supplied network program. Please refer to SyncThru User's Guide.

You can configure the basic network parameters through the printer's control panel. Use the printer control panel to do the following:

- Print a Network Configuration Page
- Enable or disable network protocols (AppleTalk, IPX/SPX)
- Configure TCP/IP
- Configure IPX frame types

E

Configuring Network Parameters on the Control Panel

Supported Operating Systems

Item	Requirements
Network Interface	10/100 Base-TX (standard for ML-2551N and ML-2552W) or 802.11b Wireless LAN (standard for ML-2552W)
Network Operating System	• Novell NetWare 3.x, 4.x, 5.x • Windows 95/98/Me, NT 4.0/2000 • Unix AT&T, BSD4.3, HP-UX, SUN OS, SOLARIS, SCO • Linux RedHat 6.0 • Macintosh OS 7.0 or higher
Network Protocols	• Netware IPX/SPX • TCP/IP, DLC/LLC on Windows • Port9100 on Windows NT, Unix, Linux • Apple EtherTalk (802.3)
Dynamic Addressing Server	• DHCP, BOOTP

- IPX/SPX: Internet Packet exchange/Sequenced Packet eXchange
- TCP/IP: Transmission Control Protocol/Internet Protocol
- DLC/LLC: Data Link Control/Logical Link Control
- DHCP: Dynamic Host Configuration Protocol
- BOOTP: Bootstrap Protocol

Printing a Network Configuration Page

The Network Configuration page shows how the network interface card on your printer is configured. The default settings enabled all parts which are suitable for most applications.

1. Press the **Menu** button ( ) until you see “Network” on the bottom line of the display.

2. Press the **Enter** button ( ) to access the menu.

3. Press the scroll button (or) until “Print Net CFG” displays on the bottom line.

4. Press the **Enter** button ( ).

   The Network Configuration page prints out.

Setting Network Protocols

When you first install the printer, all supported network protocols are enabled when you turn the printer on. If a network protocol is enabled, the printer may actively transmit on the network even when the protocol is not in use. This may increase network traffic slightly. To eliminate unnecessary traffic, you can disable unused protocols.

1. Press the **Menu** button ( ) until you see "Network" on the bottom line of the display.
2. Press the **Enter** button ( ) to access the menu.
3. Press the scroll button (or) until "Config Network" displays on the bottom line. Press the **Enter** button ( ).
4. Press the scroll button (or) to display "Yes" and press the **Enter** button ( ). Then press the **Upper Level** button ( ).
5. Press the scroll button (or) until you see the desired protocol on the bottom line.

   You can choose AppleTalk or Netware.
6. Press the **Enter** button ( ).
7. Press the scroll button (or) to change the setting to "On" (enable) or "Off" (disable).
8. Press the **Enter** button ( ) to save the selection.

E

Configuring TCP/IP

Your printer can be set up on a variety of TCP/IP networks. There are several ways in which your printer can be assigned a TCP/IP address, depending on your network.

- Static Addressing: TCP/IP address is assigned manually by the network administrator.
- Dynamic Addressing BOOTP/DHCP(default): TCP/IP address is assigned automatically by the server.

Static Addressing

To enter the TCP/IP address from your printer's control panel, take the following steps:

1. Press the **Menu** button ( ) until you see "Network" on the bottom line of the display. Press the **Enter** button ( ) to access the menu.
2. Press the **Enter** button ( ) when "Config Network" displays on the bottom line.
3. Press the scroll button (or) to display "Yes" and press the **Enter** button ( ).
4. Press the **Upper Level** button ( ), then use the scroll button ( ).
5. Press the **Enter** button ( ) when "Config TCP" displays.
6. Press the scroll button (or) to display "Yes" and press the **Enter** button ( ).
7. Press the **Upper Level** button ( ), then use the scroll button ( ).
8. Press the **Enter** button ( ) when "IP Get Method" displays.
9. Press the scroll button (or) to display "Static" and press the **Enter** button ( ).
10. Press the **Upper Level** button ( ), then use the scroll button ( ).

11 Press the **Enter** button (⊛) to access the IP Address menu.

IP address consists of 4 bytes.

Enter a number between 0 and 255 for each byte.

12 Press the scroll button (◀ or ▶) to enter a number between 0 and 255 and press the **Enter** button (⊛).

13 Repeat Step 12 to complete the address from the 1st byte to the 4th byte.

14 To select other parameters, such as Subnet Mask or Gateway, press the **Upper Level** button (↺), then use the scroll button (◀ or ▶). Press the **Enter** button (⊛).

15 Repeat steps 12 and 13 to configure the other TCP/IP parameters.

Dynamic Addressing (BOOTP/DHCP)

To assign the TCP/IP address automatically by the server, take the following steps:

1 Press the **Menu** button (⊞) until you see "Network" on the bottom line of the display. Press the **Enter** button (⊛) to access the menu.

2 Press the **Enter** button (⊛) when "Config Network" displays on the bottom line.

3 Press the scroll button (◀ or ▶) to display "Yes" and press the **Enter** button (⊛).

4 press the **Upper Level** button (↺), then use the scroll button (▶).

5 Press the **Enter** button (⊛) when "Config TCP" displays.

6 Press the scroll button (◀ or ▶) to display "Yes" and press the **Enter** button (⊛).

E

7 Press the **Upper Level** button (↺), then use the scroll button (▶).

8 Press the scroll button (◀ or ▶) to display "DHCP" and press the **Enter** button (✳).

9 To assign the address from the BOOTP server, press the **Enter** button (✳) when "BOOTP" displays.

Configuring IPX Frame Types

On IPX/SPX protocol networks (for example, Novell NetWare), the format of network communication frames must be specified on the printer. In most cases, you can keep the default setting "AUTO". However, you can manually set the frame type format, if required.

- **AUTO** (default): Automatically senses and limits the frame type to the first one detected.
- **EN_8023**: Limits the frame type to IPX over IEEE 802.3 frames. All others will be counted and discarded.
- **EN_II**: Limits the frame type to IPX over Ethernet Frames. All others will be counted and discarded.
- **EN_8022**: Limits the frame type to IPX over IEEE 802.2 with IEEE 802.3 frames. All others will be counted and discarded.
- **EN_SNAP**: Limits the frame type to IPX over SNAP with IEEE 802.3 frames. All others will be counted and discarded.

Note that the IPX/SPX protocol must be enabled in the **Netware** menu before you can configure frame types. See "Setting Network Protocols" on page E.7.

Take the following steps to change the frame type format:

1 Press the **Menu** button (🖶) until you see "Network" on the bottom line of the display. Press the **Enter** button (✳) to access the menu.

2 Press the **Enter** button (✳) when "Config Network" displays on the bottom line.

3 Press the scroll button (◀ or ▶) to display "Yes" on the bottom line. Press the **Enter** button (✳).

4 Press the **Upper Level** button (↺).

5 Press the scroll button (◀ or ▶) until "Netware" displays on bottom line. Press the **Enter** button (✳).

6 Press the **Enter** button (✳) when "On" displays.

7 press the **Upper Level** button (↺), then use the scroll button (▶).

8 Press the **Enter** button (✳) when "Config Netware" displays.

9 Press the scroll button (◀ or ▶) to display "Yes" on the bottom line. Press the **Enter** button (✳), and then press the **Upper Level** button (↺).

10 Press the **Upper Level** button (↺), then use the scroll button (▶).

11 Press the **Enter** button (✳) when "IPX Frame Type" displays.

12 Press the scroll button (▶) until you see the desired frame type and press the **Enter** button (✳).

13 Press the scroll button (◀ or ▶) to change the setting and then press the **Enter** button (✳).

14 Repeat steps 12 and 13 to configure another frame type, if necessary.

Restoring the Network Configuration

You can return the network configuration to its default settings.

1. Press the **Menu** button ( ) until you see "Network" on the bottom line of the display.
2. Press the **Enter** button ( ) to access the menu.
3. Press scroll button (or) until "Default Set" displays on the bottom line.
4. Press the **Enter** button ( ) to confirm the selection.

F

Programme Installing Printer Options

Your printer is a full-featured laser printer that has been optimised to meet most of your printing needs. Recognizing that each user may have different requirements, however, Samsung makes several options available to enhance the printer's capabilities.

This chapter includes:

- **Precautions When Installing Printer Options**
- **Installing Memory and PostScript DIMMs**
- **Installing a Network or Serial Interface Card**
- **Installing an Optional Paper Tray**

Precautions When Installing Printer Options

DISCONNECT THE POWER CORD:

Never remove the printer control board while the printer is plugged in.

To avoid the possibility of an electrical shock, always disconnect the power cord when installing or removing ANY internal or external printer option.

DISCHARGE STATIC ELECTRICITY:

The control board and internal printer options (Memory and PS DIMMs, Network and Serial interface cards) are sensitive to static electricity. Before installing or removing an internal option, discharge static electricity from your body by touching something metal, such as the metal back plate on any device plugged into a grounded power source. If you walk round before finishing installation, discharge any static electricity once again.

Installing Memory and PostScript DIMMs

Additional printer memory and the PostScript option are provided on DIMMs (Dual In-line Memory Modules). This procedure is applicable to either option.

NOTE: For using the ML-2550 printer with the PostScript driver, you need to install an optional PS DIMM.

1 Turn the printer power off and unplug all cables from the printer.

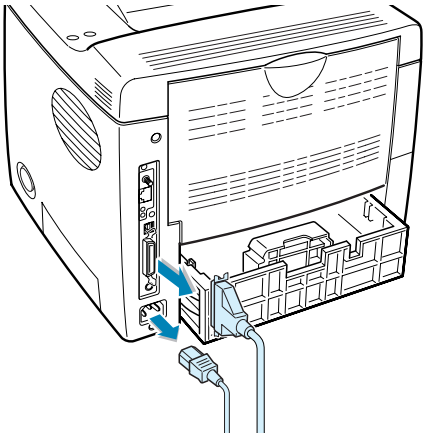

2 Remove the two screws on the rear of the printer, then remove the control board cover.

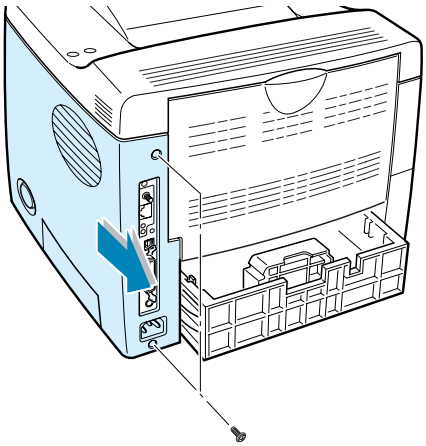

3 Locate the PS DIMM slot (the upper slot) and the memory DIMM slot (the lower slot) on the control board. They are not interchangeable.

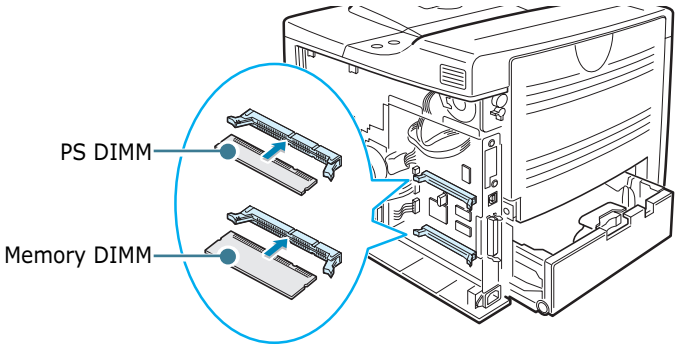

To install the PS DIMM, continue with Step 4.

To install the memory DIMM, go to Step 5.

4 Hold the PS DIMM so that the notch and the connection point are aligned with the slot as shown, and insert it all the way into the upper slot labelled “ROM DIMM” at a 90 degrees angle.

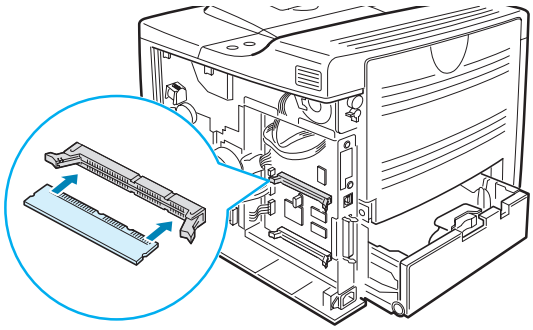

5 Hold the memory DIMM so that the notch and the connection point are aligned with the slot as shown, and insert it all the way into the lower slot labelled “RAM DIMM” at a 90 degrees angle.

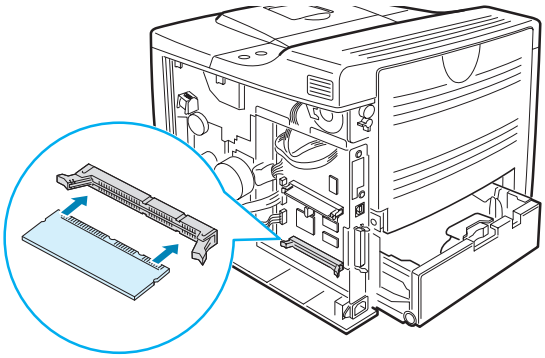

6 Replace the control board cover and tighten the two screws.

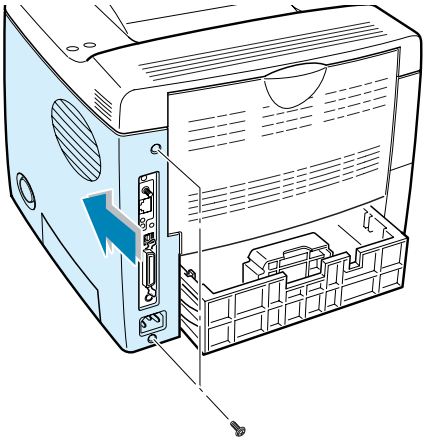

7 Reconnect the power cord and printer cable, and turn the printer on.

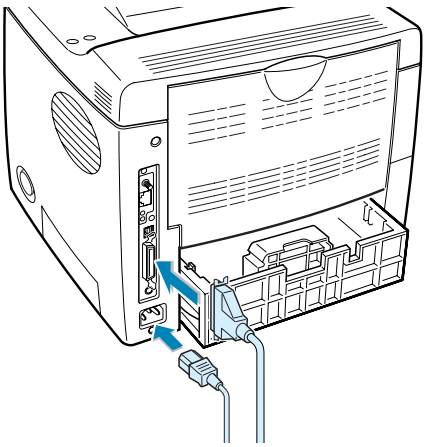

NOTES: For PostScript driver installation and usage information on a Macintosh system, refer to Appendix A, "Using Your Printer with a Macintosh." For PS printing on a Windows system, refer to Appendix B, "Using Windows PostScript Driver."

Removing the Memory or PS DIMM

1 Follow steps 1 and 2 on page F.3 to access the control board.

2 Push the clips at each end of the connector slot away from the DIMM.

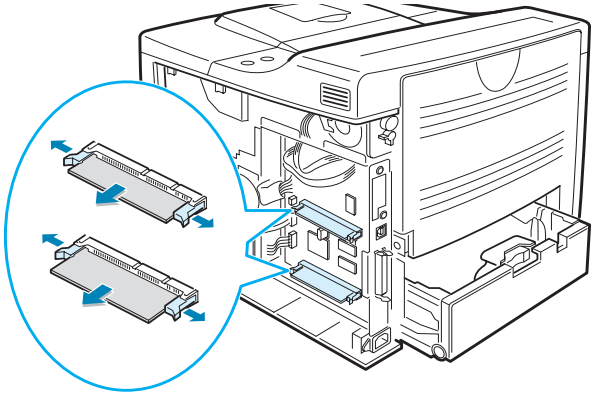

3 Place the DIMM in its original packaging or wrap it with paper and store it in a box.

4 Follow from Step 6 on page F.5.

Installing a Network or Serial Interface Card

Check if there is missing parts in your package of the optional interface card.

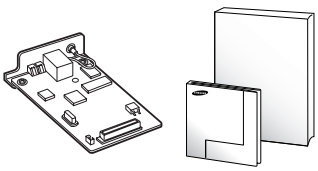

▲ Network Interface Card, SyncThru CD-ROM and Setup Guide

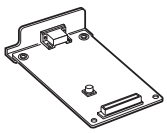

▲ Serial Interface Card

Review the precautions on page F.2 and then follow this procedure to install the network or serial interface card option in your printer.

1 Unpack the network or serial printer card. Make sure that there is no missing or damaged part.

2 Turn the printer power off and unplug all cables from the printer.

3 Remove the two screws on the back of the printer, then remove the control board cover.

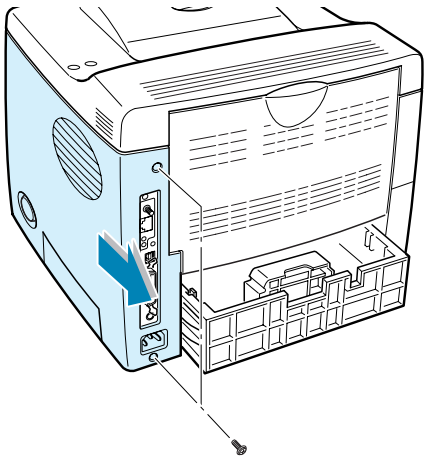

4 Remove the two screws and the bracket from the control board. You can discard the old bracket.

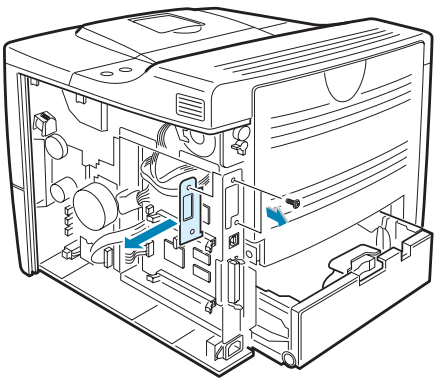

If you are replacing the network interface card with new one or the serial interface card, remove the two screws and the old card.

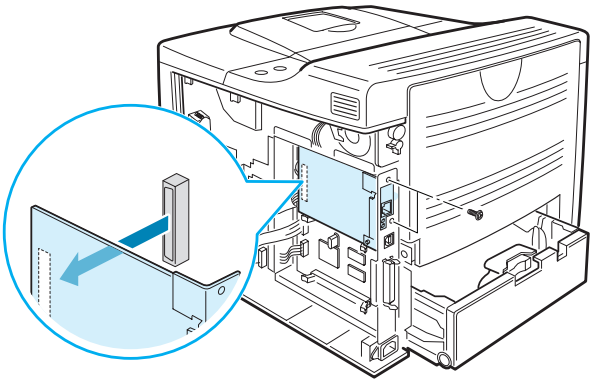

5 Align the connector on the network or serial interface card with the connector on the control board. Push the card firmly into the connector until it is completely inserted into place.

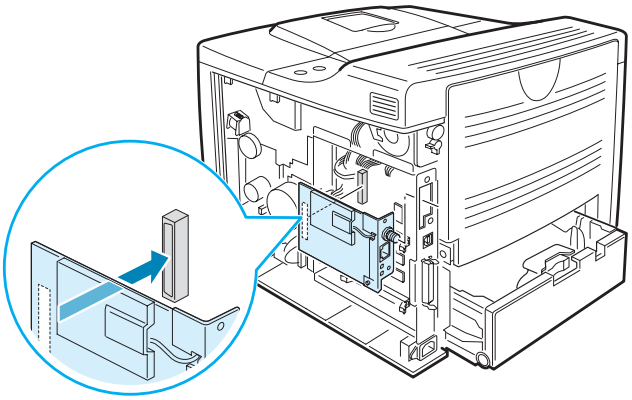

6 Tighten the two screws which you removed in Step 4.

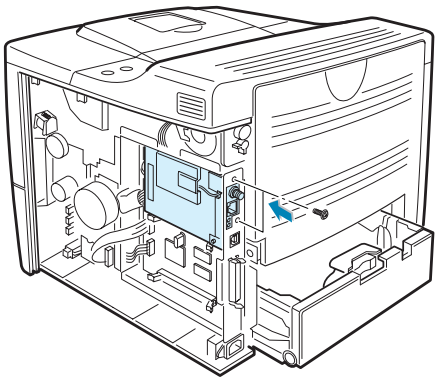

7 Replace the control board cover and tighten the two screws.

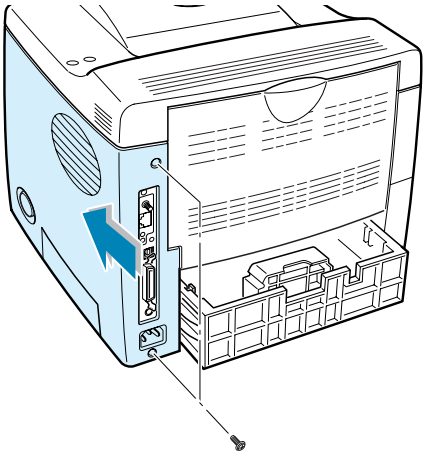

8 If you purchase the network interface card supporting the wireless LAN interface, insert the antenna counterclockwise, as shown.

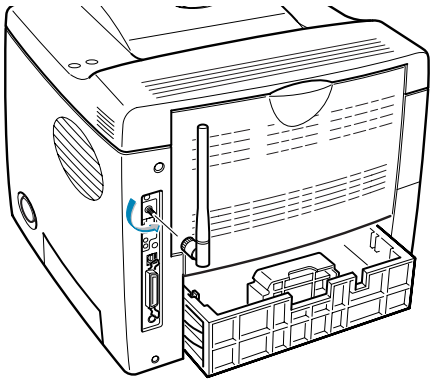

9 Connect the network or serial cable, reconnect the power cord and then turn the printer on.

NOTES:

- For information about configuring and using the printer on a network environment, refer to the User's Guide provided with the network interface card. You can also configure the network parameters on the control panel; see page E.6.
- Because the network and the serial interface cards are inserted into the same connector on the control board, you cannot install both of them.

F

Installing an Optional Paper Tray

You can increase the paper handling capacity of your printer by installing an optional Tray2. The optional paper tray consists of two components; the support unit and paper tray.

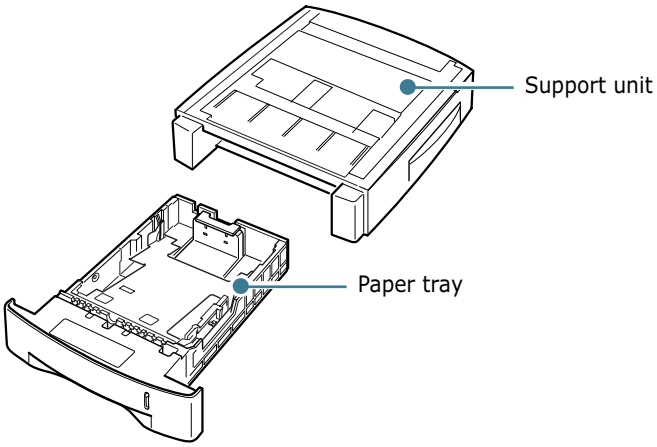

1 Turn off the printer and unplug all cables from the printer.

2 Remove the tape fastening the interface cable from the bottom of the support unit.

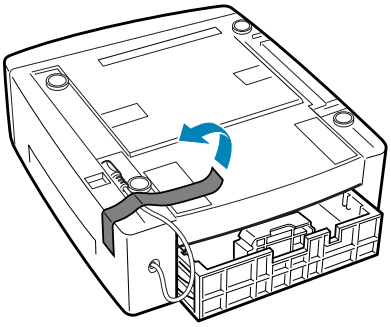

3 Observe the location of the support unit's tabs.

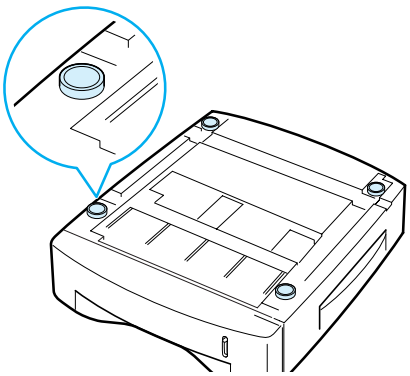

4 Align the printer with the support unit and lower it into place on the tabs.

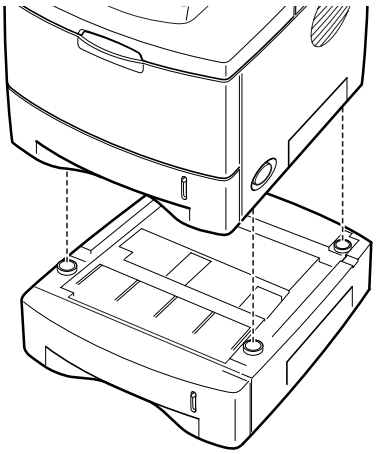

5 Plug the cable into the connector on the back of the printer.

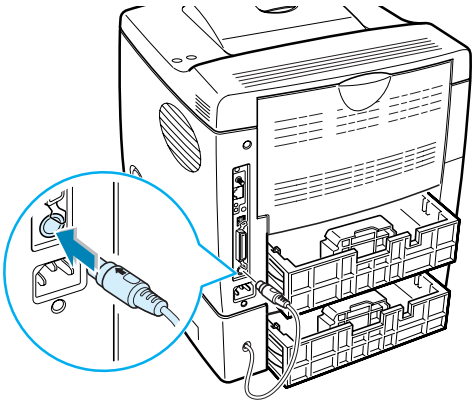

6 Load paper in the Tray2. For information about loading paper in the tray, see page 2.6.

7 Reconnect the power cord and cables and then turn the printer on.

NOTE: When you print a document, configure the printer driver from your application. To access the printer driver, see page 5.2.

CAUTIONS: Do not remove Tray 1 from the printer while you are printing using the optional Tray 2. If you do this, a paper jam may occur. Use the optional Tray 2 with Tray 1.

F

MEMO

G SPECIFICATIONS

This chapter includes:

- **Printer Specifications**
- **Paper Specifications**

Printer Specifications

Item	Specifications and Description
Print Speed	24 PPM (A4); 25 PPM (Letter)
Resolution	1200 dpi
First Printing Time	Less than 12 seconds
Warm-up Time	50 seconds
Power Rating	AC 100 ~ 127 V (USA, Canada) / 220 ~ 240 V (Others), 50 / 60 Hz
Power Consumption	400 W average during operation Less than 15 W in power-save mode
Acoustic Noise	Stand by: Less than 35 dB Operating: Less than 55 dB
Toner Supply	Single cartridge
Toner Cartridge Life	10,000 Pages (for starter, 5,000 Pages), IDC 5% coverage
Duty Cycle	Monthly: 100,000 pages maximum
Weight	Gross: 17.3 Kg (38.1 lb) / Net: 13.5 Kg (29.8 lb)
Package Weight	Paper: 1.83 Kg, Plastic: 0.33 Kg
External Dimensions (W x D x H)	386 (W) x 436 (D) x 326 (H) mm / 15.2 x 17.2 x 12.8 in. (without options)
Operating Environment	Temperature: 10 ~ 32 °C / 50 ~ 90 °F Humidity: 20 ~ 80 % RH
Emulation	PCL 6, PostScript 3 (option for ML-2550), IBM ProPrinter, EPSON
Random Access Memory (RAM)	Standard 32 MB Expandable to 144 MB: 100 pin, SDRAM, 3.3 V; 16 MB, 32 MB, 64 MB or 128 MB available
Fonts	1 bitmap, 45 scalable, 136 PS fonts (option for ML-2550)
Interface Switching	Automatic (Parallel, USB, Network)
Interface	• IEEE 1284 Bidirectional Parallel Standard - Modes supported: Compatible, Nibble, Byte, ECP • USB Interface Standard - USB 2.0 compliant - 480 Mbps 1 port • Network Interface - 10/100 Base TX (option for ML-2550) - 802.11b Wireless LAN (option for ML-2550, ML-2551N) • Serial Interface(option)

Paper Specifications

Overview

Your printer accepts a variety of print materials, such as cut-sheet paper (including up to 100% recycled fiber content paper), envelopes, labels, transparencies and custom-size paper. Properties, such as weight, composition, grain and moisture content, are important factors affecting the printer's performance and the output quality. Paper that does not meet the guidelines outlined in this User's Guide can cause the following problems:

- Poor print quality
- Increased paper jams
- Premature wear on the printer.

NOTES:

- Some paper may meet all of the guidelines in this guide and still not produce satisfactory results. This may be the result of improper handling, unacceptable temperature and humidity levels, or other variables over which Samsung has no control.
- Before purchasing large quantities of paper, ensure that the paper meets the requirements specified in this User's Guide.

CAUTION: Using paper that does not meet these specifications may cause problems, requiring repairs. These repairs are not covered by the Samsung warranty or service agreements.

Supported Sizes of Paper

Tray1/ Tray2	Dimensions[a]	Weight	Capacity[b]
Letter	216 X 279 mm (8.5 X 11 in.)	60 to 105 g/m^2 bond (16 to 28 lb)	500 sheets of 80 g/m^2 bond paper
A4	8.3 X 11.7 in. (210 X 297 mm)		
Executive	191 X 267 mm (7.25 X 10.5 in.)		
Legal	216 X 356 mm (8.5 X 14 in.)		
B5 (JIS)	182 X 257 mm (7.2 X 10 in.)		
Folio	216 X 330 mm (8.5 X 13 in.)		

Multi-Purpose Tray	Dimensions[a]	Weight	Capacity[b]
Minimum Size (custom)	76 X 127 mm (3 X 5 in.)	60 to 163 g/m^2 bond (16 to 43 lb)	100 sheets of 80 g/m^2 bond paper
Maximum Size (custom)	216 X 356mm (8.5 X 14 in.)		
Transparency	Same minimum and maximum paper sizes as listed above.	Thickness: 0.10 X 0.14 mm (0.0039 X 0.0055 in.)	50 typical
Labels[c]		Thickness: 0.10 X 0.14 mm (0.0039 X 0.0055 in.)	25 typical
Envelopes		up to 90 g/m^2 (16 to 24 lb)	up to 10

a. The printer supports a wide range of media sizes. See "Printing on Card Stock or Custom-sized Materials" on page 4.22.
b. Capacity may vary depending on media weight and thickness, and environmental conditions.
c. Smoothness: 100 to 250 (Sheffield)

NOTE: You may experience jams when using print materials with a length of less than 127 mm (5.0 in.). For optimum performance, ensure that you are storing and handling the paper correctly. Please refer to "Printer and Paper Storage Environment" on page G.7.

Guidelines for Using Paper

For the best result, use conventional 75 g/m^2 (20 lb) paper. Ensure that the paper is of good quality, and free of cuts, nicks, tears, spots, loose particles, dust, wrinkles, voids, and curled or bent edges.

If you are unsure of what type of paper you are loading, such as bond or recycled paper, check the label on the package.

The following problems may cause print quality deviations, jamming or even damage to the printer.

Symptom	Problem with Paper	Solution
Poor print quality or toner adhesion, problems with feeding	Too moist, too rough, too smooth or embossed; faulty paper lot	Try another kind of paper, between 100 ~ 250 Sheffield, 4 ~ 5 % moisture content.
Dropout, jamming, curl	Stored improperly	Store paper flat in its moisture-proof wrapping.
Increased gray background shading/printer wear	Too heavy	Use lighter paper, open the rear output tray.
Excessive curl problems with feeding	Too moist, wrong grain direction or short-grain construction	• Open the rear output tray. • Use long-grain paper.
Jamming, damage to printer	Cutouts or perforations	Do not use paper with cutouts or perforations.
Problems with feeding	Ragged edges	Use good quality paper.

NOTES:

- Do not use letterhead paper printed with low-temperature inks, such as those used in some types of thermography.
- Do not use raised or embossed letterhead.
- The printer uses heat and pressure to fuse toner to the paper. Insure that any coloured paper or preprinted forms use inks that are compatible with this fusing temperature (200 °C or 392 °F for 0.1 second).

Paper Specifications

Category	Specifications
Acid Content	5.5 ~ 8.0 pH
Caliper	0.094 ~ 0.18 mm (3.0 ~ 7.0 mils)
Curl in Ream	Flat within 5 mm (0.02 in.)
Cut Edge Conditions	Cut with sharp blades with no visible fray.
Fusing Compatibility	Must not scorch, melt, offset, or release hazardous emissions when heated to 200 °C (392 °F) for 0.1 second.
Grain	Long Grain
Moisture Content	4 % ~ 6 % by weight
Smoothness	100 ~ 250 Sheffield

Paper Output Capacity

Output Tray	Capacity
Face-down top output tray	250 sheets of 80 g/m^2 bond paper
Face-up rear output tray	100 sheet of 80 g/m^2 bond paper

Printer and Paper Storage Environment

Paper storage environmental conditions directly affect the feed operation.

Ideally, the printer and paper storage environment should be at or near room temperature, and not too dry or humid. Remember that paper is hygroscopic; it absorbs and loses moisture rapidly.

Heat works with humidity to damage paper. Heat causes the moisture in paper to evaporate, while cold causes it to condense on the sheets. Heating systems and air conditioners remove most of the humidity from a room. As paper is opened and used, it loses moisture, causing streaks and smudging. Humid weather or water coolers can cause the humidity to increase in a room. As paper is opened and used it absorbs any excess moisture, causing light print and dropouts. Also, as paper loses and gains moisture it can become distorted. This can cause paper jams.

Care should be taken not to purchase more paper than can be used in a short time (about 3 months). Paper stored for long periods may experience heat and moisture extremes, which can cause damage. Planning is important to prevent damage to large supplies of paper.

Unopened paper in sealed reams can remain stable for several months before use. Opened packages of paper have more potential for environment damage, especially if they are not wrapped with a moisture-proof barrier.

The paper storage environment should be properly maintained to ensure optimum printer performance. The required condition is 20° to 24°C (68° to 75°F), with a relative humidity of 45% to 55%. The following guidelines should be considered when evaluating the paper's storage environment:

- Paper should be stored at or near room temperature.
- The air should not be too dry or too humid.
- The best way to store an opened ream of paper is to rewrap it tightly in its moisture-proof wrapping. If the printer environment is subject to extremes, unwrap only the amount of paper to be used during the day's operation to prevent unwanted moisture changes.

Envelopes

Envelope construction is critical. Envelope fold lines can vary considerably, not only between manufacturers, but also within a box from the same manufacturer. Successful printing on envelopes depends upon the quality of the envelopes. When selecting envelopes, consider the following components:

- Weight: The weight of the envelope paper should not exceed 90 g/m^2 (24 lb) or jamming may occur.
- Construction: Prior to printing, envelopes should lie flat with less than 6 mm (0.25 in.) curl, and should not contain air.
- Condition: Envelopes should not be wrinkled, nicked, or otherwise damaged.
- Temperature: You should use envelopes that are compatible with the heat and pressure of the printer.
- Size: You should only use envelopes within the following size ranges.

	Minimum	Maximum
Multi-Purpose Tray	90 X 148 mm (3.5 X 5 in.)	216 X 356 mm (8.5 X 14 in.)

NOTES:

- Use only the Multi-Purpose Tray to print envelopes.
- You may experience some paper jams when using any media with a length less than 127 mm (5.0 in.). This may be caused by paper that has been affected by environmental conditions. For optimum performance, make sure you are storing and handling the paper correctly. Please refer to "Printer and Paper Storage Environment" on page G.7.

Envelopes with Double Side Seams

Double side-seams construction has vertical seams at both ends of the envelope rather than diagonal seams. This style may be more likely to wrinkle. Be sure the seam extends all the way to the corner of the envelope as illustrated below.

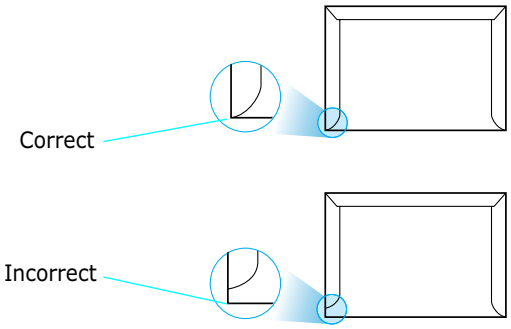

Envelopes with Adhesive Strips or Flaps

Envelopes with a peel-off adhesive strip or with more than one flap that folds over to seal must use adhesives compatible with the heat and pressure in the printer. The extra flaps and strips might cause wrinkling, creasing, or even jams and may even damage the fuser.

Envelope Margins

The following gives typical address margins for a commercial #10 or DL envelope.

Type of Address	Minimum	Maximum
Return address	15 mm (0.6 in.)	51 mm (2 in.)
Delivery address	51 mm (2 in.)	89 mm (3.5 in.)

NOTES:

- For best print quality, position margins no closer than 15 mm (0.6 in.) from the edges of the envelope.
- Avoid printing over the area where the envelope's seams meet.

Envelope Storage

Proper storage of envelopes helps contribute to print quality. Envelopes should be stored flat. If air is trapped in an envelope, creating an air bubble, then the envelope may wrinkle during printing. See "Printing on Envelopes" on page 4.14.

Labels

CAUTIONS:

- To avoid damaging the printer, use only labels recommended for laser printers.
- To prevent serious jams, always use the Multi-Purpose Tray to print labels and always use the rear output tray.
- Never print on the same sheet of labels more than once and never print on a partial sheet of labels.

When selecting labels, consider the quality of each component:

- Adhesives: The adhesive material should be stable at 200 °C (392 °F), the printer's fusing temperature.
- Arrangement: Only use labels with no exposed backing between them. Labels can peel off sheets with spaces between the labels, causing serious jams.
- Curl: Prior to printing, labels must lie flat with no more than 13 mm (.5 in.) of curl in any direction.
- Condition: Do not use labels with wrinkles, bubbles, or other indications of separation.

See "Printing on Labels" on page 4.17.

Transparencies

Transparencies used in the printer must be able to withstand 200 °C (392 °F), the printer's fusing temperature.

CAUTION: To avoid damaging the printer, use only transparencies recommended for use in laser printers.

See "Printing on Transparencies" on page 4.19.

INDEX

A
antenna, connect 2.12

B
booklet printing 5.17

C
cancel, print job 5.5
card stock, print 4.22
cleaning sheet, print 6.9
components 1.5
configuration page, print 6.2
connect
    Ethernet 2.12
    network antenna 2.12
    parallel 2.10
    power cord 2.13
    USB 2.11
control panel 3.2
    buttons 3.3
    display 3.2
    menus 3.5
custom-sized materials, prnt 4.22

D
demo page, print 2.14
display language, change
    control panel 2.14
    printer driver 2.20
double-sided printing 5.11

E
envelopes, print 4.14
error messages 7.20
Ethernet cable, print 2.12

F
face down output tray 4.5
face up output tray 4.6
Favorite setting, use 5.6
features
    printer 1.2
    printer driver 2.16

G
graphic properties, set 5.25

H
help, use 5.6

I
image mode 5.26
install
    PPD files B.2
    printer driver for Macintosh A.2
    printer options F.1
    Remote Control Panel D.2
    SPL driver for Linux C.2
    SPL driver for Windows 2.17
    toner cartridge 2.4

L
labels, print 4.17
Linux
    common problems 7.25
    configuration tool C.8
    driver, install C.2
    LLPR properties C.10
load, paper
    in the Multi-Purpose Tray 4.8
    in the Tray1/optional Tray 2 2.6
    using the manual feed 4.12

M

Macintosh
- common problems 7.23
- desktop printer, create A.4
- document, print A.6
- driver, install A.2
- system requirements A.2

manual feed mode, use 4.12
memory DIMM, install F.3
Multi-Purpose Tray, use 4.8

N

network antenna, connect 2.12
network interface card, install F.6
network printing
- cable/antenna, connect 2.12
- card, install F.6
- locally shared printer, set E.3
- network-connected printer, set E.5
- parameters, configure E.6

n-up printing 5.13

O

option, install
- memory DIMM F.3
- network interface card F.6
- paper tray 2 F.10
- PS DIMM F.3
- serial interface card F.6

optional tray, install F.10
orientation, select 5.3
output location, select 4.5
overlay, use 5.21

P

paper
- choose 4.2
- load 2.6
- sizes and capacities 4.3
- specifications G.3

paper jam
- around the toner cartridge 7.10
- in the duplex area 7.13
- in the paper exit area 7.12
- in the paper feed area
  - Multi-Purpose Tray 7.9
  - optional Tray 2 7.8
  - Tray 1 7.7
- tips for avoiding 7.14

paper level bar 4.7
paper properties, set 5.7
paper size,set 5.7
paper source, set 5.8
paper type, set 5.8
parallel cable, connect 2.10
poster printing 5.16
PostScript driver
- access, in Windows B.6
- errors 7.24
- install, in Macintosh A.2
- install, in Windows B.2

preprinted paper, print 4.21
print order, set 5.28
print quality problems 7.15
print quality problems, solve 7.15
print resolution, set 5.25
printer software
- install
  - in Linux C.2
  - in Macintosh A.2
  - in Windows 2.17
- reinstall
  - in Windows 2.18
- uninstall
  - in Linux C.7
  - in Windows 2.19

printing
- booklets 5.17
- configuration page 6.2
- demo page 2.14
- double-sided 5.11
- fitting to a selected paper 5.15
- from Macintosh A.6
- from Windows 5.2
- multiple pages on one sheet 5.13
- posters 5.16
- reduced/enlarged document 5.14
- using overlays 5.21
- watermarks 5.18

printing problems 7.3
problem, solving
- checklist 7.2
- DOS 7.27
- error messages 7.20
- general 7.3
- Linux 7.25
- Macintosh 7.23
- paper jams 7.7
- print quality 7.15
- PS errors 7.24
- Windows 7.22

PS DIMM, install F.3

Q

quality problems, solve 7.15

R

rear output tray, use 4.6
Remote Control Panel
    install D.2
    start D.4
    tabs D.5
    uninstall D.3

S

serial interface card, install F.6
specification
    paper G.3
    printer G.2
system requirements
    for Linux C.2
    for Macintosh A.2
    for Windows 2.17

T

toner cartridge
    install 2.4
    maintain 6.3
    redistribute 6.4
    replace 6.6
Toner Save mode, use 5.9
top output tray, use 4.5
transparencies, print 4.19
Tray 1, use 2.6
turn on, printer 2.13

U

uninstall
    Linux C.7
    Remote Control Panel D.3
    Windows 2.19
unpack 2.2
USB cable, connect 2.11
USB driver, install
    in Windows 98/Me 2.20

W

watermarks, use 5.18

Home

Visit us at:
www.samsungprinter.com

Rev.1.00