SAMSUNG

SAMSUNG DIGITall
everyone's invited™

SAMSUNG LASER PRINTER

User's Guide

LASER PRINTER

ML-1200 Series

This manual is provided for information purposes only. All information included herein is subject to change without notice. Samsung Electronics is not responsible for any damages, direct or indirect, arising from or related to use of this manual.

© 2001 Samsung Electronics Co., Ltd. All rights reserved.

- ML-1200 Series and Samsung logo are trademarks of Samsung Electronics Co., Ltd.
- Centronics is a trademark of Centronics Data Computer Corporation.
- IBM and IBM PC are trademarks of International Business Machines Corporation.
- Microsoft, Windows, Windows 9x, Windows Me, Windows NT and Windows 2000 are trademarks of Microsoft Corporation.
- GNU Ghostscript software, Copyright (C) 1999. Aladdin Enterprise, Menlo Park, California, and other authors as indicated in its documentation.
- Apple, Macintosh, Power Macintosh, iMac and iBook are trademarks of Apple Computer, Inc.
- Adobe and Adobe Acrobat Reader are trademarks of Adobe Systems.
- All other brand or product names are trademarks of their respective companies or organizations.

Contents

Chapter 1 Introduction

Special Features ---------- 1.1
Printer Components ---------- 1.3

Chapter 2 Setting Up Your Printer

STEP 1: Unpack Your Printer ---------- 2.1
STEP 2: Install the Toner Cartridge ---------- 2.2
STEP 3: Load Paper ---------- 2.4
STEP 4: Connect to the Computer with a Parallel Cable ----- 2.6
STEP 5: Turn on the Printer ---------- 2.7
STEP 6: Print a Demo Page! ---------- 2.7
STEP 7: Install the Printer Software ---------- 2.8
Installing Software from Diskette ---------- 2.13

Chapter 3 Using Control Panel

Control Panel Buttons ---------- 3.1
Control Panel Lights ---------- 3.3

Chapter 4 Print Media

Choosing Paper and Other Media ---------- 4.1
Selecting the Output Location ---------- 4.4
Loading Paper ---------- 4.5
Printing on Envelopes ---------- 4.7
Printing on Heavy Paper ---------- 4.9
Printing on Labels ---------- 4.10
Printing on Transparencies ---------- 4.11
Printing on Preprinted Paper ---------- 4.12
Printing on Card Stocks ---------- 4.13

Chapter 5 Printing Tasks

Printing a Document ---------- 5.1
Using Toner Save Mode ---------- 5.6
Printing Multiple Pages on One Sheet of Paper ---------- 5.7
Fitting Your Document to a selected Paper Size ---------- 5.8
Printing Posters ---------- 5.9
Setting Graphic Properties ---------- 5.11
Printing Watermarks ---------- 5.13
Using Page Overlay ---------- 5.16
Reprinting the Last Page ---------- 5.20
Printing on a Network Environment ---------- 5.21

Chapter 6 Maintaining Your Printer

Maintaining Toner Cartridge ---------- 6.1
Cleaning the Printer ---------- 6.4

Chapter 7 Problem Solving

Troubleshooting Checklist ---------- 7.1
Solving General Printing Problems ---------- 7.2
Clearing Paper Jams ---------- 7.6
Solving Print Quality Problems ---------- 7.11
Troubleshooting Error Messages ---------- 7.17
Common Windows Problems ---------- 7.19

Appendix

Printer Specifications ---------- A.1
Paper Specifications ---------- A.2
Using Your Printer with a USB cable ---------- A.10
Using Your Printer with Macintosh ---------- A.16
Linux Driver Installation ---------- A.23

INDEX

Environmental and Safety Consideration

Laser Safety Statement

The printer is certified in the U.S. to conform to the requirements of DHHS 21 CFR, chapter 1 Subchapter J for Class I(1) laser products, and elsewhere is certified as a Class I laser product conforming to the requirements of IEC 825.

Class I laser products are not considered to be hazardous. The laser system and printer are designed so there is never any human access to laser radiation above a Class I level during normal operation, user maintenance, or prescribed service condition.

WARNING

Never operate or service the printer with the protective cover removed from Laser/Scanner assembly. The reflected beam, although invisible, can damage your eyes.

CAUTION - INVISIBLE LASER RADIATION WHEN THIS COVER OPEN. DO NOT OPEN THIS COVER.

VORSICHT - UNSICHTBARE LASERSTRAHLUNG, WENN ABDECKUNG GEÖFFNET. NICHT DEM STRAHL AUSSETZEN.

ATTENTION - RAYONNEMENT LASER INVISIBLE EN CAS D'OUVERTURE.EXPOSITION DAN GEREUSE AU FAISCEAU.

ATTENZIONE -RADIAZIONE LASER INVISIBILE IN CASO DI APERTURA. EVITARE L'ESPOSIZIONE AL FASCIO.

PRECAUCION -RADIACION LASER IVISIBLE CUANDO SE ABRE. EVITAR EXPONERSE AL RAYO.

ADVARSEL. - USYNLIG LASERSTRÅLNING VED ÅBNING NÅR SIKKERHEDSBRYDERE ER UDE AF FUNKTION. UNDGÅ UDSAETTELSE FOR STRÅLNING.

ADVARSEL. - USYNLIG LASERSTRÅLNING NÅR DEKSEL ÅPNES. STIRR IKKE INN I STRÅLEN. UNNGÅ EKSPONERING FOR STRÅLEN.

VARNING - OSYNLIG LASERSTRÅLNING NÄR DENNA DEL ÄR ÖPPAND OCH SPÄRREN ÄR URKOPPLAD. BETRAKTA EJ STRÅLEN. STRÅLEN ÄR FARLIG.

VARO! - AVATTAESSA JA SUOJALUKITUS OHITETTAESSA OLET ALTTIINA NÄKYMÄTTÖMÄLLE LASERSÄTEILYLLE ÄLÄ KATSO SÄTEESEEN.

Ozone Safety

During normal operation, the Samsung ML-1200 Series printer produces ozone. the ozone produced does not present a hazard to the operator. However, it is advisable that the machine be operated in a well ventilated area.

If you need additional information about ozone, please request your nearest Samsung dealer.

Power Saver

This printer contains advanced energy conservation technology that reduces power consumption when it is not in active use.

When the printer does not receive data for an extended period of time, power consumption is automatically lowered.

The energy star emblem does not represent EPA endorsement of any product or service.

Radio Frequency Emissions

Fcc Regulations

This equipment has been tested and found to comply with the limits for a Class B digital device, pursuant to Part 15 of the FCC Rules. These limits are designed to provide reasonable protection against harmful interference in a residential installation. This equipment generates, uses and can radiate radio frequency energy and, if not installed and used in accordance with the instructions, may cause harmful interference to radio communications. However, there is no guarantee that interference will not occur in a particular installation.

If this equipment does cause harmful interference to radio or television reception, which can be determined by turning the equipment off and on, the user is encouraged to try to correct the interference by one or more of the following measures:

- Reorient or relocate the receiving antenna.
- Increase the separation between the equipment and receiver.
- Connect the equipment into an outlet on a circuit different from that to which the receiver is connected.
- Consult the dealer or an experienced radio/TV technician for help.

Do not make any changes or modifications to the equipment unless otherwise specified in the manual. If such changes or modifications should be made, you must first stop operation of the equipment.

Use of shielded cable is required to comply with Class B limits in Subpart B of Part 15 of FCC Rules.

CAUTION: Changes or modifications not expressly approved by the manufacture responsible for compliance could void the user's authority to operate the equipment.

Canadian Radio Interference Regulations

This digital apparatus does not exceed the Class B limits for radio noise emissions from digital apparatus as set out in the interference-causing equipment standard entitled "Digital Apparatus", ICES-003 of the Industry and Science Canada.

Cet appareil numérique respecte les limites de bruits radioélectriques applicables aux appareils numériques de Classe B prescrites dans la norme sur le matériel brouilleur: "Appareils Numériques", ICES-003 édictée par l'Industrie et Sciences Canada.

EC Declaration of Conformity

We,

SAMSUNG ELECTRONICS CO., LTD.
#259, Gong Dan-Dong, Gumi-City, Kyung Buk, Korea
or
SHANDONG SAMSUNG TELECOMMUNICATIONS CO., LTD
Jinzhou Road, Weihai Hi-Tech. IDZ Shandong Province, China

declare sole responsibility that the

Samsung ML-1200 Series Laser printer

meets the intent of Directive 89/336/EEC for Electromagnetic Compatibility and Low Voltage Directive 73/23/EEC.
Compliance was demonstrated to the following specifications as listed in the official journal of the European Communities:

EN 50081-Emissions:
- EN 55022 Radiated, Class B
- EN 55022 Conducted, Class B
- EN 61000-3-2 Power Harmonics
- EN 61000-3-3 Voltage Fluctuations and Flicker

EN 55024-EMS:
- EN 6100-4-2 Electrostatic Discharge
- EN 6100-4-3 RF EM Field
- EN 6100-4-4 Fast Transient
- EN 6100-4-5 Surges
- EN 6100-4-6 RF Common mode
- EN 6100-4-8 Power Frequency Magnetic Field
- EN 6100-4-11 Voltage Dips and Interruptions

EN 60950-Safety

chapter 1

Introduction

Congratulations on the purchase of Samsung ML-1200 Series printer! This chapter provides information on the following topics:

- ♦ Special Features
- ♦ Printer Components

Special Features

1

Samsung ML-1200 Series is a versatile, productive printer equipped with special features that improve print quality, giving you a competitive edge. You can:

Print with excellent quality and high speed

- You can print at **600 dots per inch** (dpi). See page 5.11.
- Your printer prints **12 pages-per-minute**.

Handle paper flexibly

- Standard **150-sheet automatic input tray** and a **1-sheet manual input tray** support various sizes and types of paper.
- Two output locations: Select either **the face-down output tray** or **the face-up output slot** for the most convenient access.

Save your time and money

- You can use **Toner Save** mode to use less toner. See page 5.6.
- Print multiple pages on a single sheet of paper to save paper (**N-up printing**). See page 5.7.
- One-touch last page printing is allowed in the Ready mode. See page 5.20.
- The printer automatically **conserves electricity** by substantially reducing power consumption when not printing.
- This product meets **Energy Star** guidelines for energy efficiency.

Print in various environments

- You can print in Window 95/98/Me/NT 4.0/2000.
- Your printer is compatible with the Linux system.

Create professional documents

- You can customize your documents by using **Watermarks** such as "Confidential." See page 5.13.
- Preprinted forms and letterheads can be printed on plain paper. See page 5.16.
- Print **Posters**. The text and pictures of each page of your document are magnified and printed across the selected sheet of paper. After the document has printed, trim off the white edges of each sheet. Tape the sheets together to form a poster. See page 5.9.

Print in various environments

- You can print in **Windows 95/98/Me/NT 4.0/2000**.
- Your printer is compatible with **Linux** and **Macintosh**.
- The ML-1200 Series printer comes with both **Parallel** (ML-1210 Only) and **USB** interfaces.

Printer Components

1

Front View

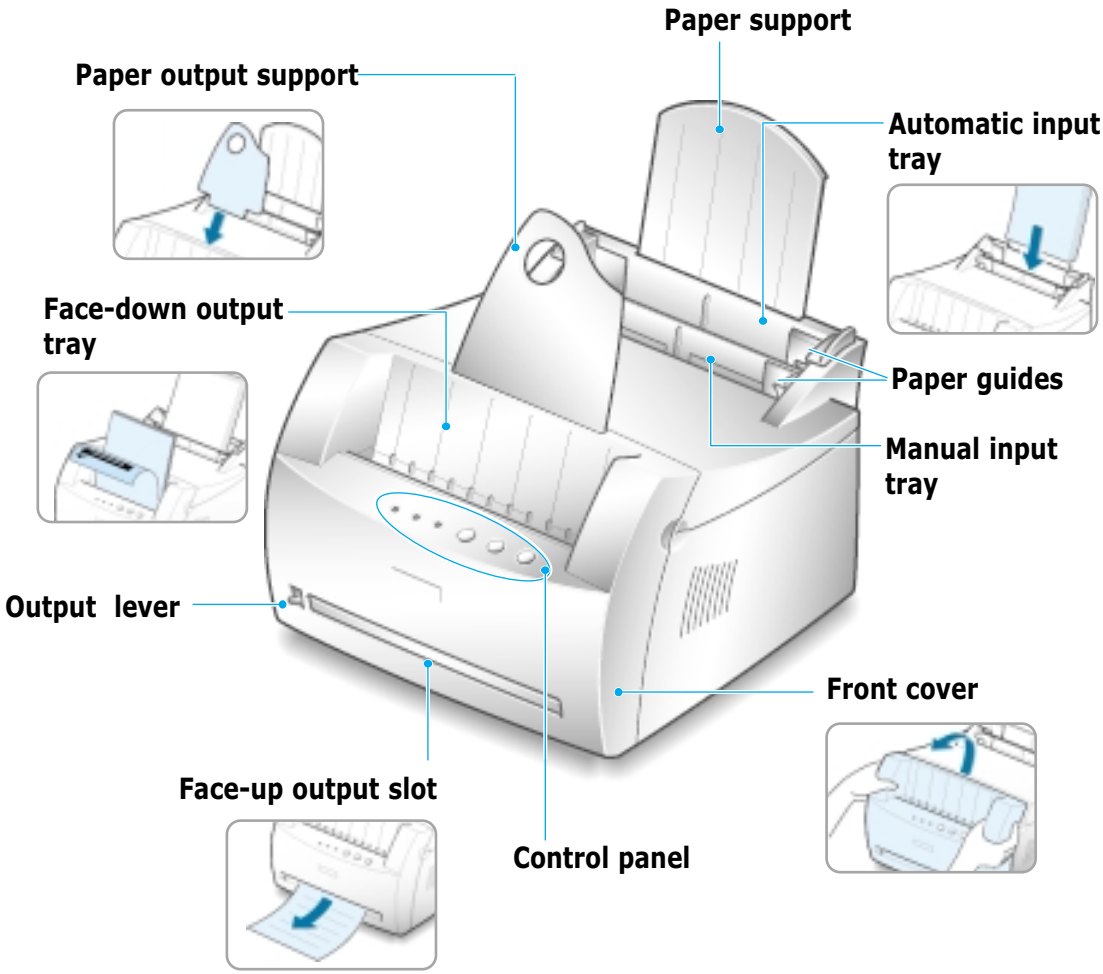

Inside View

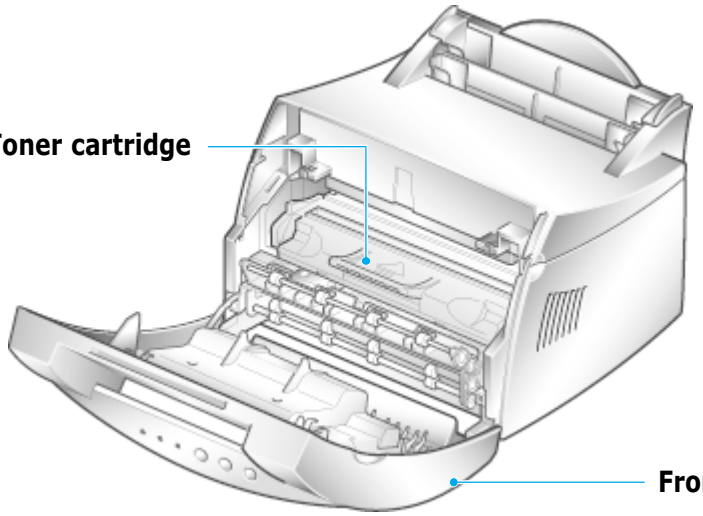

Rear View

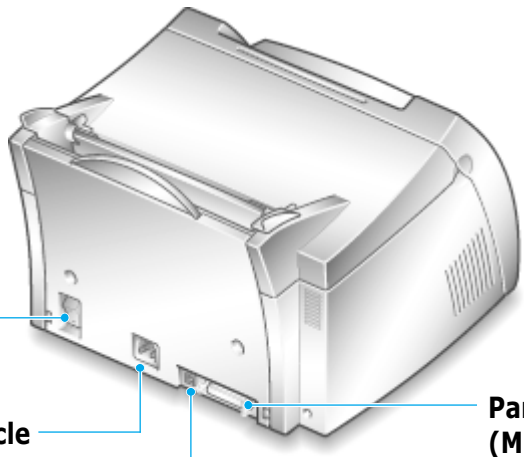

chapter 2

Setting Up Your Printer

This chapter provides step by step information on setting up your printer. Topics included in this chapter are:

- ♦ STEP 1: Unpack Your Printer
- ♦ STEP 2: Install the Toner Cartridge
- ♦ STEP 3: Load Paper
- ♦ STEP 4: Connect to the Computer with a Parallel Cable (ML-1210 Only)
- ♦ STEP 5: Turn on the Printer
- ♦ STEP 6: Print a Demo Page!
- ♦ STEP 7: Install the Printer Software
- ♦ Installing Software from Diskette

STEP 1 Unpack Your Printer

1 Remove the printer and all accessories from the packing carton. Make sure that your printer has been packed with the following items:

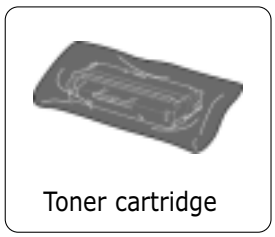
Toner cartridge

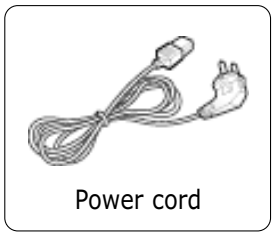
Power cord

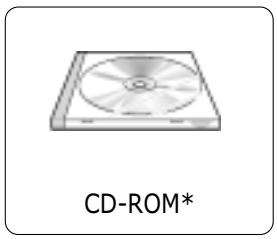
CD-ROM*

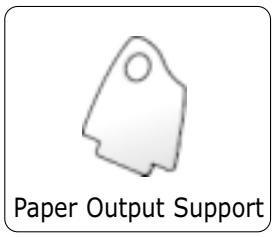
Paper Output Support

Setup Guide

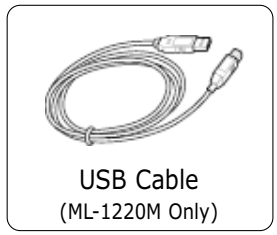
USB Cable
(ML-1220M Only)

Notes:

- If any items are missing or damaged, notify your dealer immediately.
- **Components may differ from one country to another.**
- The CD-ROM contains the printer driver, the User's Guide, the Adobe Acrobat Reader program and the Make Your Own Diskette setup software.

2 Carefully remove all packing tapes from the printer.

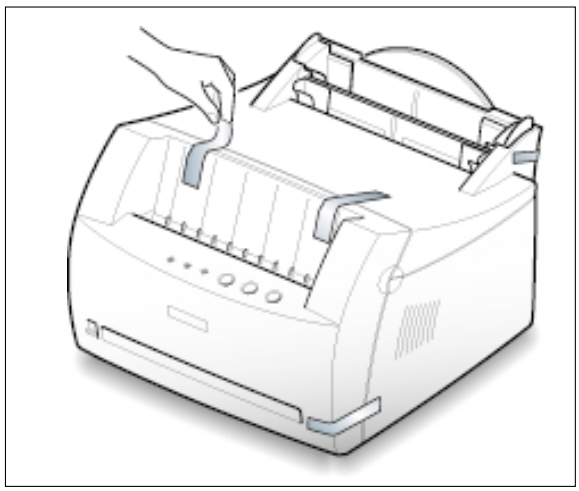

3 Attach the supplied paper output support as shown.

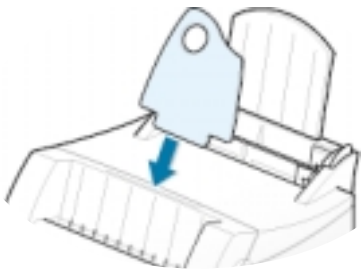

STEP 2

Install the Toner Cartridge

1 Grasp the front cover by both sides of the cover and pull it toward you to open.

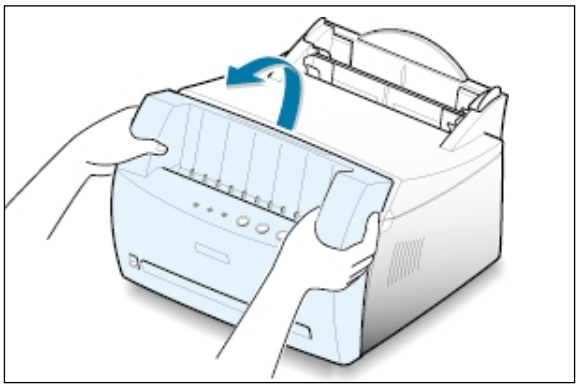

2 Remove the toner cartridge from its bag and remove the paper covering the toner cartridge completely out of the cartridge. Discard the paper.

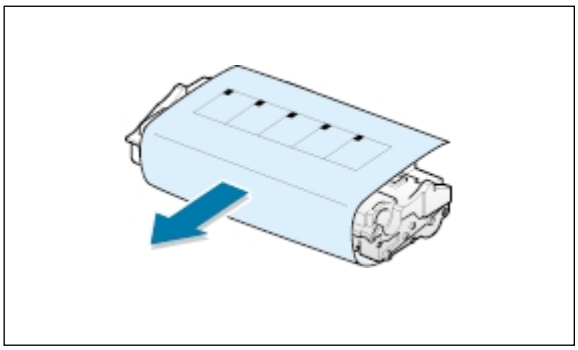

3 Gently shake the cartridge from side to side to distribute the toner evenly inside the cartridge.

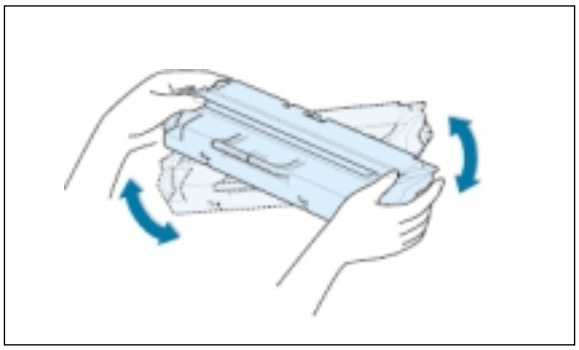

CAUTION:
To prevent damage, do not expose the toner cartridge to light for more than a few minutes. Cover it with a piece of paper, if left exposed for more than a few minutes.

If toner gets on your clothing, wipe it off with a dry cloth and wash clothing in cold water. **Hot water sets toner into fabric.**

4 Locate the cartridge slots inside the printer, one on each side.

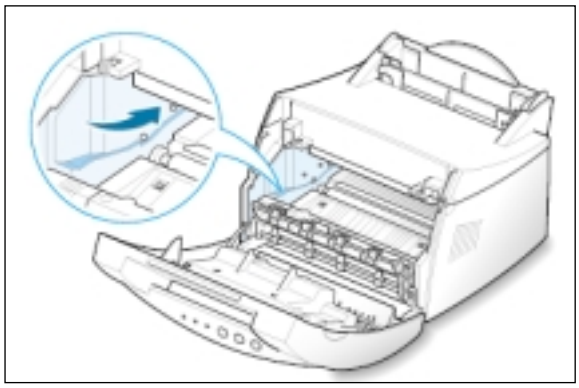

5 Grasp the handle and insert the cartridge in the printer until it snaps into place.

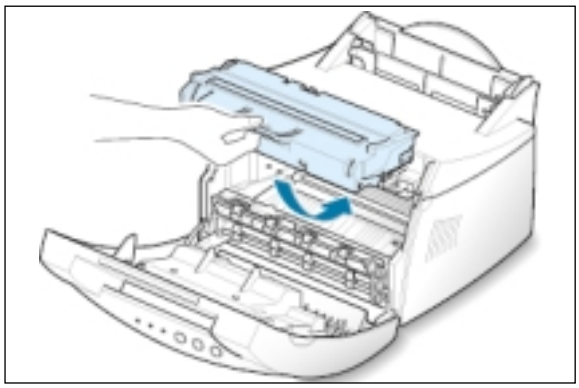

6 Close the front cover. Make sure that the cover is securely closed.

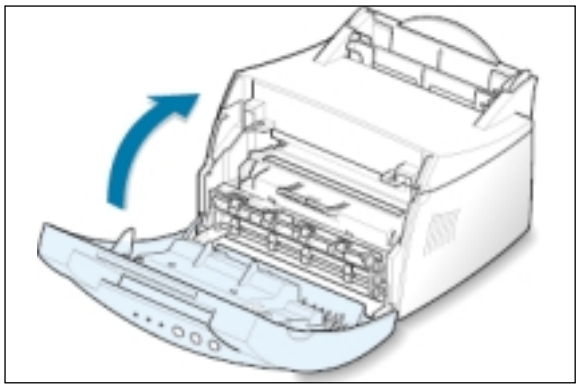

Note: When printing text at 5% coverage, you can expect a toner cartridge life of approximately 2,500 pages (1,000 pages for the toner cartridge that is shipped with the printer).

STEP 3 Load Paper

1 Pull the paper support on the automatic input tray up, until it stops.

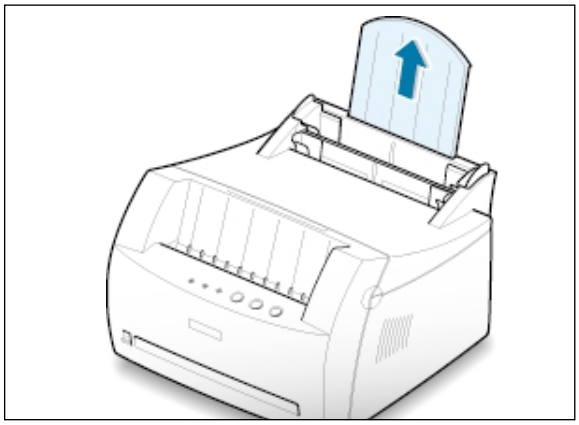

2 Before loading the paper, flex the sheets back and forth to loosen them, then fan them.

Tap the edges of the stack on a table top to straighten them to prevent paper jams.

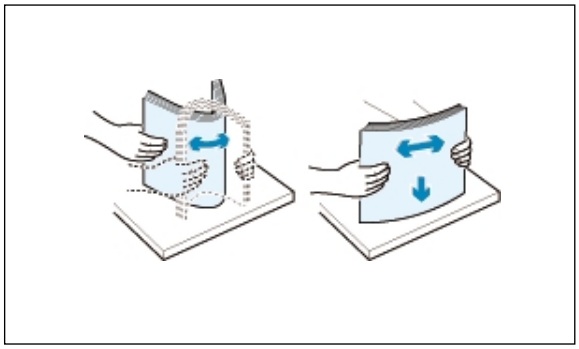

3 Load a stack of paper into the automatic input tray **with the print side facing up**.

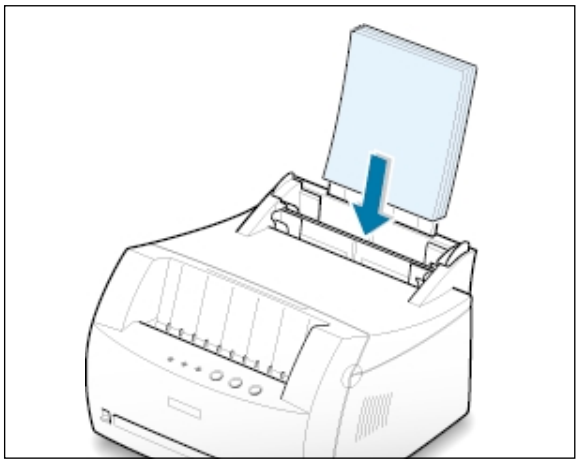

4 Do not load too much. This tray holds up to 150 sheets.

Keep the paper below this height mark.

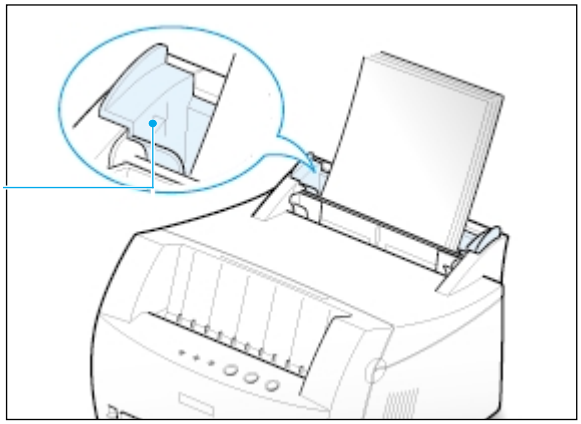

5 Adjust the paper guides to the width of the paper stack.

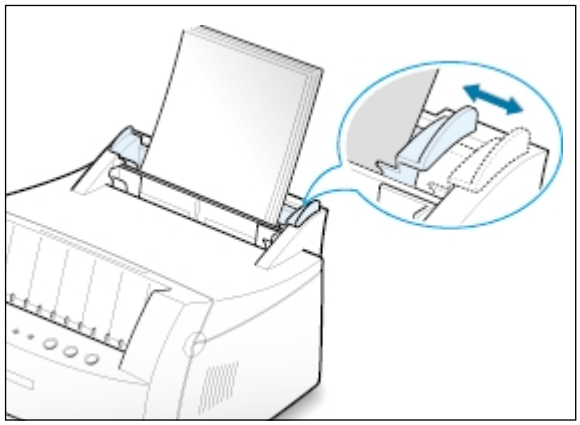

Notes:

- Do not push the width guide far enough to cause the media to warp.
- If you do not adjust the width guide, it may cause paper jam.
- If you are needed to add more sheets of paper while printing, remove the remaining paper from the tray at first. Then, reinsert them with the new paper. Note that adding new paper into the remains in the tray may cause paper jams or multiple feeding.

STEP 4 Connect to the Computer with a Parallel Cable (ML-1210 Only)

1 Make sure both the printer and the computer are turned off.

2 Plug the parallel printer cable into the connector on the back of the printer.

Push the metal clips down to fit inside the notches on the cable plug.

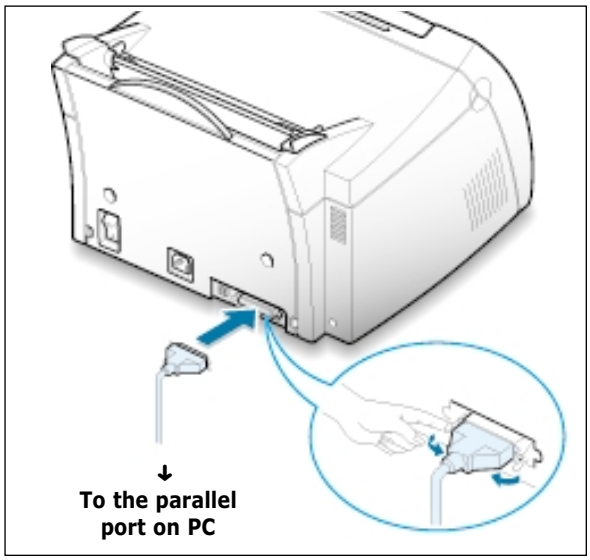

3 Connect the other end of the cable to the parallel interface port on your computer, and tighten the screws.

See your computer documentation if you need help.

If you are using a USB interface

Go to "Using Your Printer with a USB Cable" on page A.10.

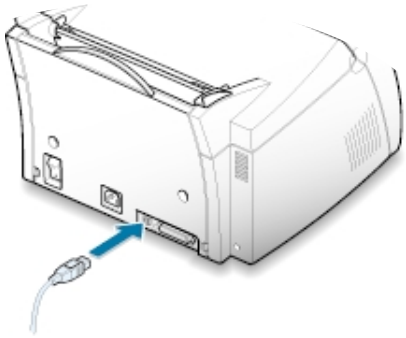

STEP 5 Turn on the Printer

1 Plug the power cord into the power receptacle on the back of the printer.

2 Plug the other end into a properly grounded AC outlet.

3 Turn on the power.

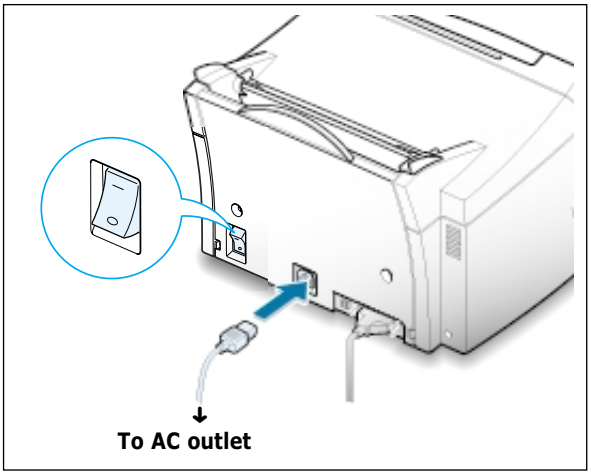

STEP 6 Print a Demo Page!

As the printer powers up, all the printer control panel lights turn on briefly. When only the **Data** light remains on, press and hold the **Demo** button.

Hold down the button for about 2 seconds until all lights blink slowly, then release, the demo page will print.

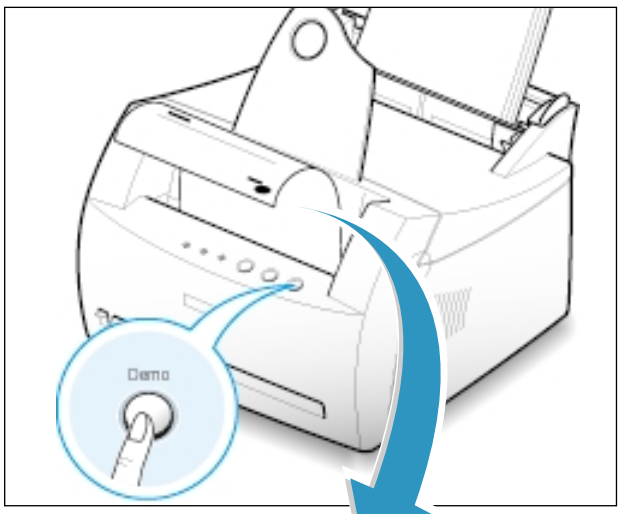

The demo page provides a sample of the print quality and helps you verify the printer is printing correctly.

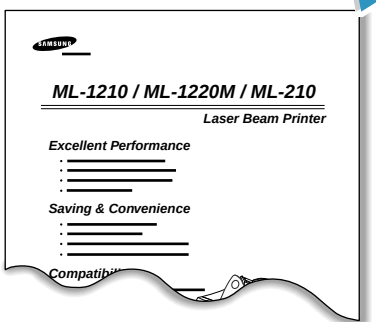

STEP 7

Install the Printer Software

Included with your printer is a CD-ROM containing the printer driver for some of the most popular Windows software applications. To operate your printer, you must install a printer driver, which translates data from your application into data that the printer understands.

If you are printing with a parallel interface (ML-1210 Only)

Go to page 2.9 for information on installing the print software on a computer that is attached directly to the printer with a parallel cable.

If you are printing with a USB interface

Go to "Using Your Printer with a USB Cable" on page A.10, for information on installing the print software on a USB-enabled computer.

If you are printing from Macintosh

Go to "Using Your Printer with a Macintosh" on page A.16, for information on installing the print software and printing from Macintosh.

If you are printing in Linux

Go to "Linux Driver Installation" on page A.23, for information on installing the Linux driver.

Before Installing the Printer Software

Verify the following:

- At least **16 MB or more of RAM** is installed on your PC.
- There is at least **50 MB of free disk space** on your PC.
- **All applications are closed on your PC before beginning installation**.
- Windows 95, Windows 98, Windows Me, Windows NT 4.0 or Windows 2000.

Installing the Printer Software from the CD-ROM

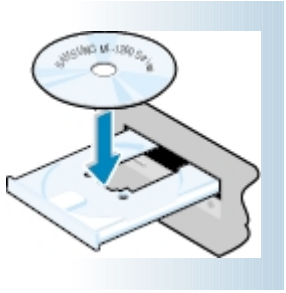

1 Place the CD-ROM in the CD-ROM drive. Installation will start automatically.

If the CD-ROM drive does not automatically run:

Select **Run** from the **Start** menu, and type **x:\cdsetup.exe** in the Open box (where **x** is the drive letter for the CD-ROM drive), then click **OK**.

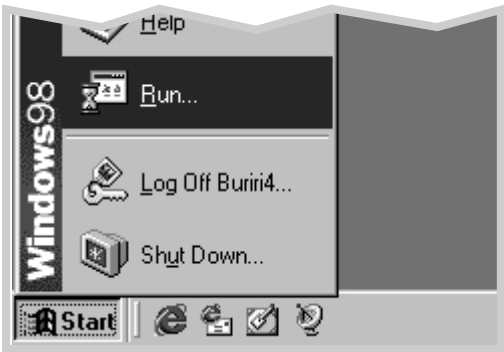

Note: If the New Hardware Found box appears during the installation procedure, click the [x] in the upper right corner of the box, or click **Cancel**.

2 When the opening screen appears, select the appropriate language.

3 Click **Install the Samsung Software on your PC**.

4 The Welcome window opens. Click **Next**.

5 The files are copied into the appropriate directory.

6 Click **Finish**.

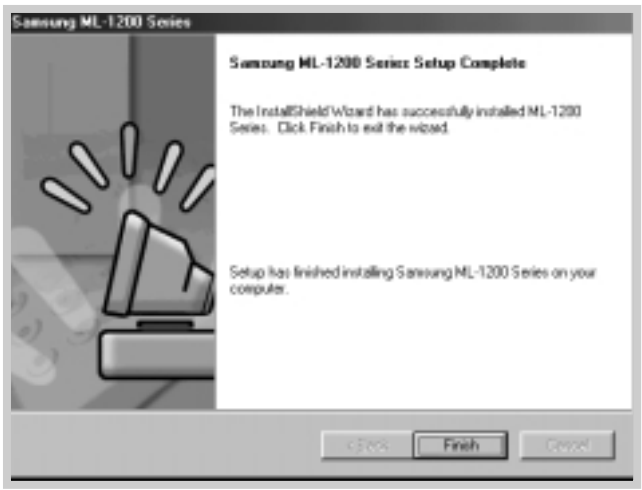

Software Installation Tips

I do not have a CD-ROM drive

If you have access to another computer with a CD-ROM drive, you can use Make diskette utility in Windows to create the disks you need for the installation. Go to "Installing Software from Diskette" on page 2.13.

How do I access printer features ?

Some printer features, such as paper size and page orientation, may be available through your application settings. Use application settings, if available, because they override printer driver settings.

Access advanced printer features through your printer driver. See the chapter 5, "Printing Tasks" for instructions on using your printer driver features.

How do I remove the printing software ?

In Windows, after installation, the Uninstall icon in the Samsung ML-1200 Series program group allows you to select and remove any or all of the Samsung ML-1200 Series printing system components. If you are upgrading the printer driver, or if your installation fails, uninstall the driver doing as the following instructions.

1. From the **Start** menu, select **Programs**.
2. Select **Samsung ML-1200 Series**, and then **Samsung ML-1200 Series Driver Maintenance**.

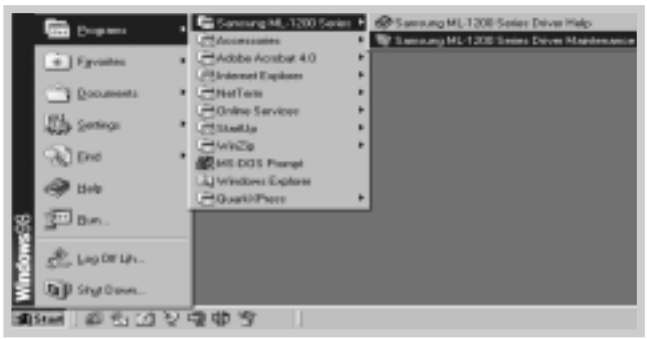

3 When your computer confirms your selection, click **OK**.

4 The Samsung ML-1200 Series printer driver and all of its components are removed from your computer.

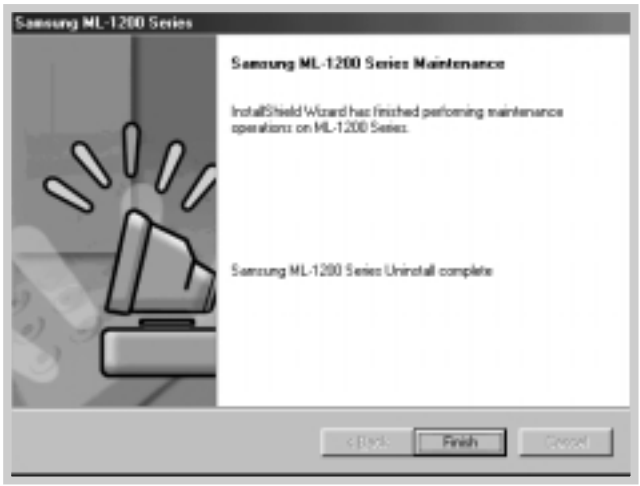

5 Click **Finish**.

If you have installing problems

- Exit your software programs. Then turn off the computer and the printer. Turn on the printer, then turn on the computer.
- Close any virus protection programs that are running on your computer.
- Uninstall the printer software using the instruction above, then repeat the installation procedure.

Can I use this printer in the other OS?

The Samsung ML-1200 Series Printer supports the Linux system. Go to "Linux Driver Installation" on page A.23 for information on installing the Linux driver.

Installing Software from Diskette

If you do not have a CD-ROM drive and if you have access to another computer with a CD-ROM drive, you can copy software installation files from your printer software CD-ROM onto floppy diskettes, then use the diskettes instead of the CD-ROM to install the software.

2

Making Installation Diskettes

You can make the installation diskettes for Samsung ML-1200 Series printer driver. Make sure that you have several formatted diskettes ready, then follow these steps:

1 Insert the CD-ROM shipped with your printer into the CD-ROM drive. Installation will start automatically.

If the CD-ROM drive does not automatically run:

Select **Run** from the **Start** menu, and type **x:\cdsetup.exe** in the Open box (where **x** is the drive letter for the CD-ROM drive), then click **OK**.

2 When the opening screen appears, select the appropriate language.

3 Click **Make your own Diskette set of software.**

4 The Copy to Floppy dialog box appears.

Select the floppy disk drive you will use to insert the diskette.

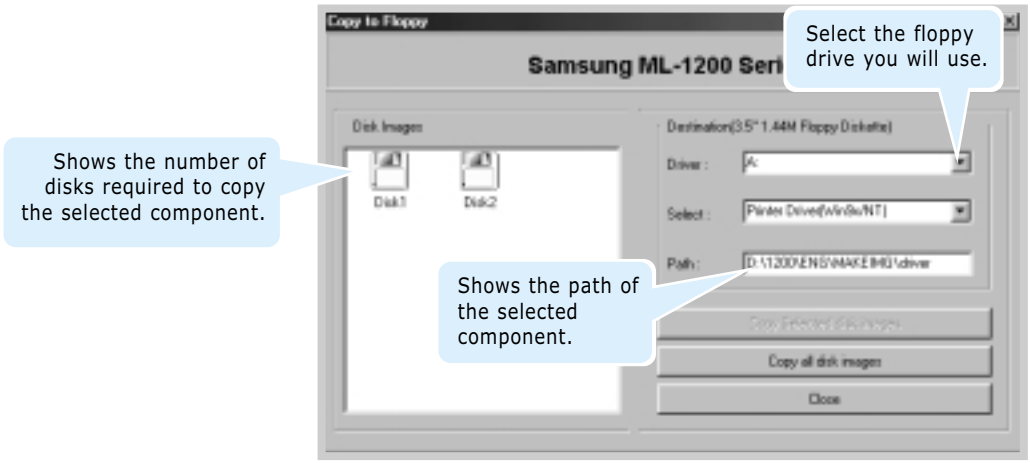

5 Click **Copy all disk images**.

If you want to copy a portion of the selected component, select the disk you want to copy in the Disk Images window, then click **Copy selected disk image**.

6 When prompted, insert a blank, formatted diskette into the floppy drive, and click **Yes** to copy the first diskette. For multiple diskettes, when the first diskette is finished, you are prompted to insert disk 2.

Make sure you label each diskette in order as you create it: Samsung ML-1200 Series driver, disk 1 of 2, etc.

7 If you have more than one disk, insert the next disk and click **Yes**.

8 When copying to diskettes has been completed, click **Close** in the Copy to Floppy dialog box. Then click **Exit** in the SAMSUNG PRINTER SETUP dialog box.

Installing Software

To install the printer driver from the diskettes, take the following steps:

1 Insert the first diskette (if the selected software diskettes are more than one).

2 From the **Start** menu, select **Run**.

3 Type **A:\setup.exe** in the Open box and click **OK**. (if your floppy drive is not **A**, substitute the correct letter.)

4 Follow the on-screen instruction to complete the installation.