Reprinting the Last Page

The Samsung ML-1200 Series printer's memory always keeps the last page of the last job. If you canceled a print job due to a paper jam or other problems and you want to know which page was printed last, reprint the last page.

Press **Cancel/Reprint** briefly in Ready mode.

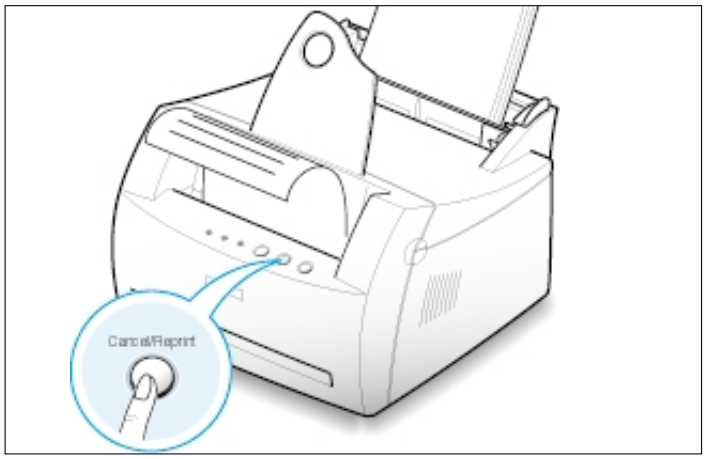

Note: If you want to prevent somebody from reprinting your document, you can turn the Reprinting feature off in the printer's properties dialog box. When you turn the feature off in the printer's properties, the **Cancel/Reprint** button on the control panel does not perform the reprinting operation.

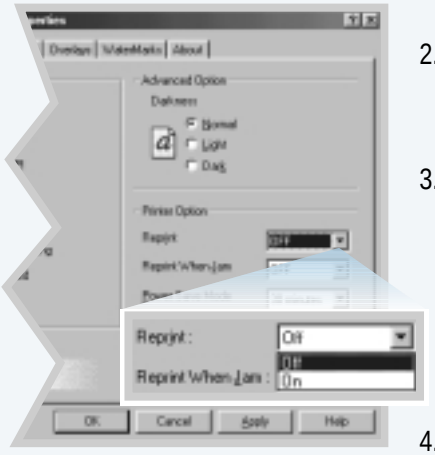

To disable this feature:

1. From the **Start** menu, select **Settings** and then **Printers**.
2. Click the right mouse button on the **Samsung ML-1200 Series** printer icon and select **Properties** to open the properties window.
3. From the **Graphic** tab, Select **Off** from the **Reprint** drop-down list.

   With this option Off, you cannot reprint the last page from the control panel.

   When you want to reprint the last page on the control panel, you must select **On** from the list.
4. Click **OK**.

Printing on a Network Environment

If you work in a network environment, you can connect your ML-1200 Series printer directly to a selected computer (called the "host computer") on the network. The printer can then be shared by other users on the network through a Windows 9x, Me, NT 4.0 or 2000 network printer connection.

Note: You need to install the Samsung ML-1200 Series printer driver on each computer that will print documents to the printer.

Setting Up Host Computer

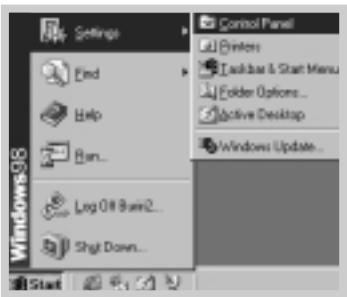

1 Start Windows.

2 From the **Start** menu, select **Control Panel**, and double-click on the **Network** icon.

3 Check the **File and Print Sharing** box, then click **OK**. Close the window.

4 Click **Start** and select **Printers** from **Settings**, then double-click your printer name.

5 Select **Properties** in the **Printers** menu.

6 Click the **Sharing** tab, then check the **Shared As** box. Fill in the Shared Name field, then click **OK**.

Setting Up Client PC

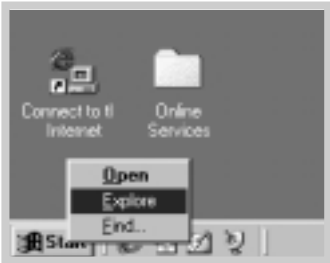

1 Right-click **Start**, and select **Explorer.**

2 Open your network folder in the left column.

3 Right-click the shared name, and select **Capture Printer Port**.

4 Select the port you want, check the **Reconnect at log on** box, then click **OK**.

5 From the **Start** menu, select **Settings**, then **Printers**.

6 Double-click your printer icon.

7 From the **Printers** menu, select **Properties.**

8 Press the **Details** tab, select the printer port, then click **OK**.

chapter 6

Maintaining Your Printer

This chapter provides suggestions for high-quality and economical printing and information for maintaining the toner cartridge and the printer.

Topics included in this chapter are:

- Maintaining Toner Cartridge
- Cleaning the Printer

Maintaining Toner Cartridge

Toner cartridge storage

To get the most from the toner cartridge, keep the following guidelines in your mind.

- Do not remove the toner cartridge from its package until you are ready to use.
- Do not refill toner cartridges. **The printer warranty does not cover damage caused by using a refilled cartridge.**
- Store toner cartridges in the same environment as the printer.
- Do not remove a toner cartridge from the printer except to replace it, clean it or clear a paper jam. Replace the cartridge immediately.
- To prevent damage to the toner cartridge, do not expose it to light for more than a few minute.

Toner cartridge life expectancy

The life of the toner cartridge depends on the amount of the toner that print jobs require. When printing text at 5 % coverage, a new toner cartridge lasts an average of 2,500 pages. (But, the toner cartridge supplied with the printer lasts an average of 1,000 pages.)

Recycling toner cartridge

After you install a new toner cartridge (see page 2.2), follow the instructions included in the toner cartridge box to recycle the old cartridge.

Saving toner

To save toner, press the **Toner Save** button on the printer control panel. The button will be lit. You can also enable the **Toner Save Mode** in your printer properties. Refer to "Using Toner Save Mode" on page 5.6. Selecting this option will expend the life of the toner cartridge and reduce your cost per page, but will reduce print quality.

Redistributing Toner

When toner is low, faded or light areas may appear on a printed page. You may be able to temporarily improve print quality by redistributing the toner. The following procedures may allow you to finish the current print job before replacing the toner cartridge.

1 Grasp the front cover by both sides of the cover and pull it toward you to open.

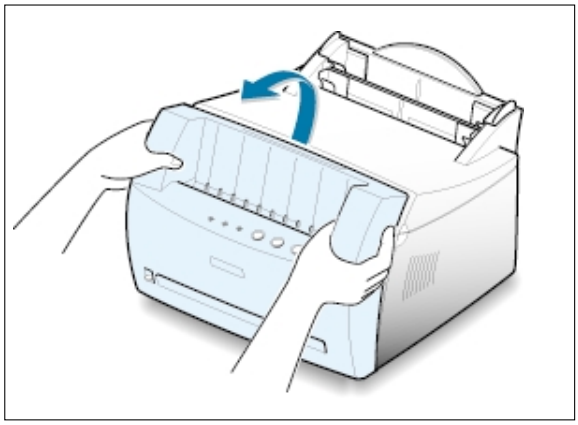

2 Remove the toner cartridge from the printer.

CAUTIONS:

- Avoid reaching too far into the printer. **The fusing area may be hot**.
- To prevent damage to the toner cartridge, **do not expose it to light for** more than a few minute.

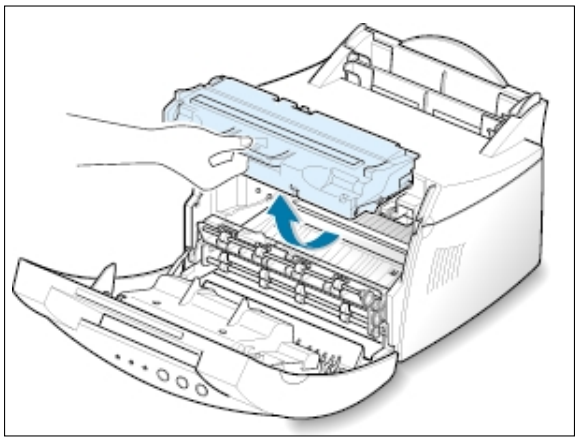

3 Gently shake the toner cartridge from side to side 5 or 6 times to redistribute the toner.

Note: If the toner gets on your clothing, wipe it off with a dry cloth and wash clothing in cold water. **Hot water sets toner into fabric**.

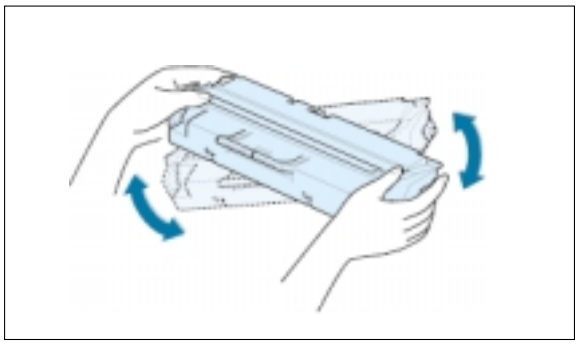

4 Reinsert the toner cartridge into the printer. Be sure that the toner cartridge snaps in its place.

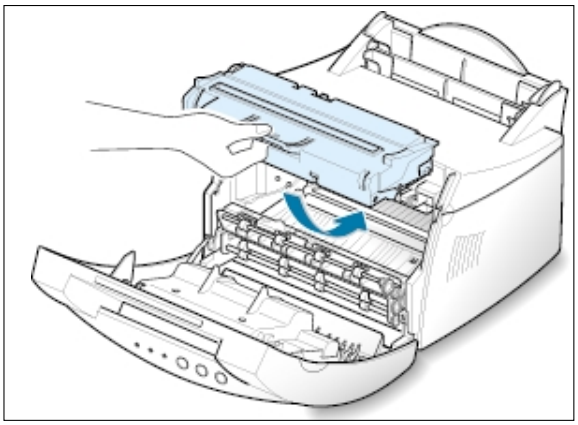

5 Firmly close the cover.

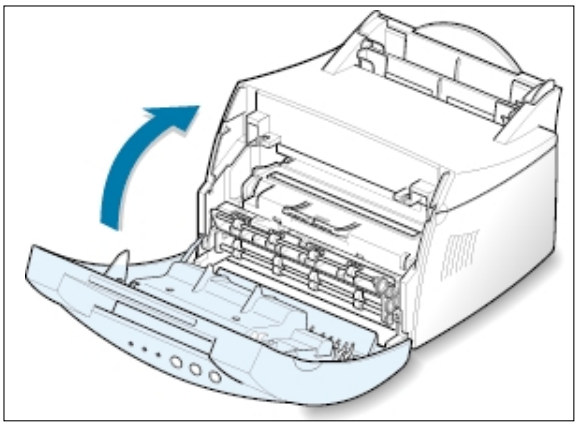

If the print remains light

Remove the old cartridge and install a new toner cartridge. See "Install the Toner Cartridge" on page 2.2.

ATTENTION: OPC Cleaning

- After every 500 page printing, your printer will automatically clean the OPC drum inside the toner cartridge and produce a **OPC cleaning sheet** with the toner debris.

Cleaning the Printer

To maintain print quality, follow the cleaning procedures below every time the toner cartridge is replaced or whenever print quality problems occur. As much as possible, keep the printer free from dust and debris.

Notes:

- Do not use ammonia-based cleaners or volatile solvents such as thinner, on or around the printer. These can damage the printer.
- While cleaning the inside of the printer, be careful not to touch the transfer roller (located underneath the toner cartridge). The oil from your hands on the roller can cause print quality problems.

Cleaning the Outside

Wipe the outside surface of the printer with a soft, clean, lint-free cloth. You can dampen the cloth slightly with water, but be careful not to be let any water drip onto the printer or inside it.

Cleaning the Inside

During the printing process, paper, toner, and dust particles can accumulate inside the printer. Over time, this buildup can cause print quality problems such as toner specks or smearing. Cleaning inside the printer will eliminate or reduce these problems.

Cleaning inside the printer

1. **Turn the printer off** and unplug the power cord, then wait for the printer to cool.
2. Open the front cover and remove the toner cartridge.
3. With a dry, lint-free cloth, wipe away any dust and spilled toner from the toner cartridge area and the toner cartridge cavity.

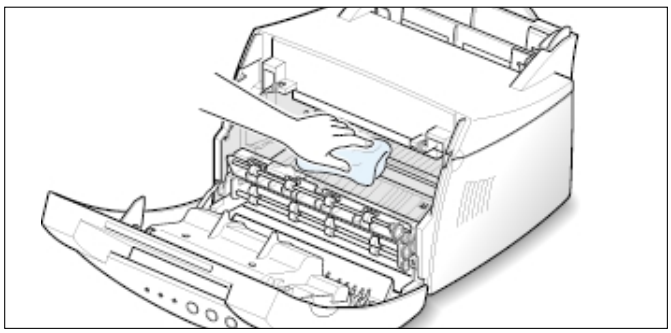

Note: To prevent damage to the toner cartridge, do not expose it to light for more than a few minute. Cover it with a piece of paper, if necessary. Also, do not touch the black transfer roller inside the printer. By doing so, you can damage the printer.

4 Reinsert the toner cartridge and close the cover

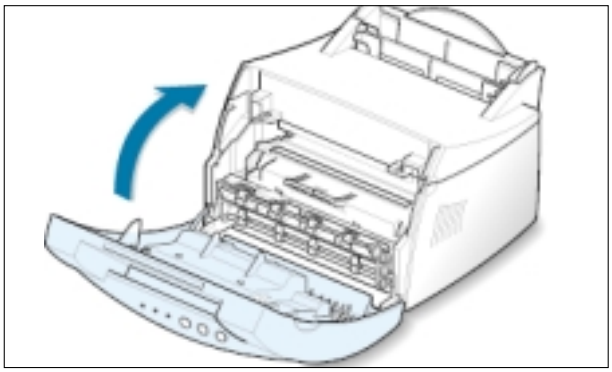

5 Then, plug in the power cord, and turn the printer on.

Printing a cleaning sheet

Printing a cleaning sheet cleans the drum inside the toner cartridge. Use this process if you are experiencing blurred, faded or smeared printouts. This process will produce a page with toner debris, which should be discarded.

1 Make sure the printer is turned on and in the Ready mode and there is paper loaded in the automatic input tray.

2 Press and hold down **Demo** on the control panel for about 10 seconds until all control panel lights remain lit, then release the button.

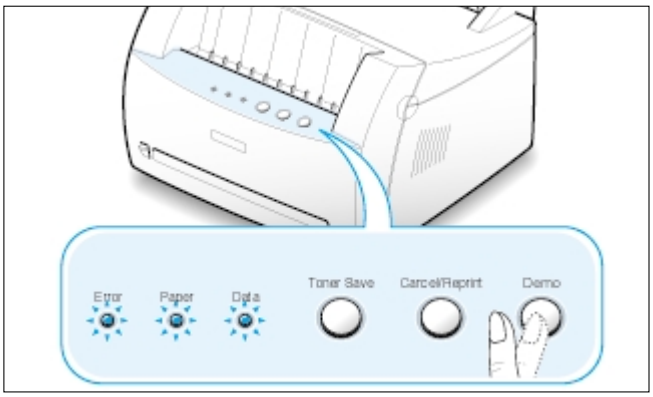

3 Your printer automatically picks up a sheet of paper from the tray and prints out a cleaning sheet with the dust or toner particles on it.

Note: The cartridge cleaning process takes some time. To stop the printing, turn the power off.

chapter 7

Problem Solving

This chapter gives helpful information for what to do if you encounter a printer error. It provides information on the following topics:

- Troubleshooting Checklist
- Solving General Printing Problems
- Clearing Paper Jams
- Solving Print Quality Problems
- Troubleshooting Error Messages
- Common Windows Problems

Troubleshooting Checklist

If the printer is not working properly, complete the following checklist in order. If the printer does not pass a step, follow the corresponding troubleshooting suggestions.

Check	Solution
Make sure that the **Data** light on the control panel is on.	• If no lights are on, check the power cord connection and the power switch. Check the power source by plugging into another outlet. • If other lights are on, go to "Troubleshooting Error Messages" on page 7.17.
Press the **Demo** button to print a demo page to verify that the printer is feeding paper correctly. See page 2.7.	• If a demo page does not print, check the paper supply in the input tray. • If the paper jams in the printer, go to " Clearing Paper Jams" on page 7.6. • If the **Error** indicator light is illuminated on the control panel, go to "Troubleshooting Error Messages" on page 7.17.
Check the demo page to see if it is printed correctly.	If there is a print quality problem, go to "Solving Print Quality Problems" on page 7.11.
Print a short document from a software application to verify the computer and printer are connected and are communicating correctly.	• If the page does not print, check the cable connection between the printer and computer. • Check the print queue or print spooler to see if the printer has been paused. • Check the software application to make sure you are using the proper printer driver and communication port. If the page is interrupted during printing, go to "Solving General Printing Problems" on page 7.2.
If completing the checklist did not diagnose the problem with the printer, check the following troubleshooting sections.	• "Solving General Printing Problems" on page 7.2. • "Troubleshooting Error Messages" on page 7.17. • "Common Windows Problems" on page 7.19.

Solving General Printing Problems

If you have any problems with the operation of your printer, refer to the table for suggested solutions.

Problem	Possible Cause	Solution
The printer does not print.	The printer is not receiving power.	If no lights are on, check the power cord connections. Check the power switch and the power source.
	Your printer is not selected as the default printer.	Select **Samsung ML-1200 Series** as your default printer.
	Check the printer for the following:	• The printer cover is not closed. • Paper is jammed. • No paper is loaded. • Toner cartridge is not installed. • Printer system error occurs. Contact a service representative.
	The printer may be in manual feed mode and out of paper. (The **Paper** light is on.)	Add paper to the manual input tray, and press the **Demo** button on the printer's control panel to start printing.
	The connection cable between the computer and the printer is not connected properly.	Disconnect the printer cable and reconnect it.
	The connection cable between the computer and the printer is defective.	If possible, attach the cable to another computer that is working properly and print a job. You may also try using a different printer cable.
	The port setting is incorrect.	Check the Windows printer setting to make sure that the print job is sent to the correct port (for example, LPT1). If the computer has more than one port, make sure the printer is attached to the correct one.

Problem	Possible Cause	Solution
The printer does not print. (continued)	The printer may be configured incorrectly.	Check the printer properties to make sure that all print settings are correct.
	The printer driver may be incorrectly installed.	Uninstall the printer driver, then reinstall the printer driver. Try printing a demo page.
	The printer is malfunctioning.	Check the lights on the control panel to determine if the printer is indicating a system error.
Printer selects media from the wrong paper source.	The paper source selection in the printer properties may be incorrect.	For many software applications the paper source selection is found under the **Paper** tab within the printer properties. Select the correct paper source.
Paper does not feed into the printer.	Paper has not been loaded correctly.	Remove paper from the input tray and reload it correctly.
	There is too much paper in the input tray.	Remove excess paper from the input tray.
	The paper is too thick.	Use only paper that meets the specifications required by the printer.
Print job is extremely slow.	The job may be very complex. The maximum print speed of the Samsung ML-1200 Series printer is 12 pages per minute.	Reduce the complexity of the page or try adjusting the print quality settings.
	If using Windows 95, the Spooling Setting may be set incorrectly.	From the **Start** menu, and then choose **Settings** and **Printers**. Right-click the Samsung ML-1200 Series printer icon, choose **Properties**, click the **Details** tab, and then choose the **Spool Settings** button. Select the desired spool setting from the available choices.

Solving General Printing Problems

Problem	Possible Cause	Solution
Half of the page is blank.	The page layout is too complex.	Simplify the page layout and remove any unnecessary graphics from the document, if possible.
	The page orientation setting may be incorrect.	Change the page orientation in your application.
	The paper size and the paper size settings do not match.	Make sure that the paper size in the print settings matches the paper in the input tray.
The paper keeps jamming.	There is too much paper in the paper tray.	Remove excess paper from the tray. If printing special media, use the manual input tray.
	An incorrect type of paper is being used.	Use only paper that meets the specifications required by the printer.
	An incorrect output method is being used.	Media such as thick paper should not be printed using the face-down output tray. Use the face-up output slot instead.
	There may be debris inside the machine.	Open the front cover and remove the debris.
The printer prints, but the text is wrong, garbled, or incomplete.	The printer cable is loose or defective.	Disconnect the printer cable and reconnect it. Try a print job that you know works. If possible, attach the cable and printer to another computer and try a print job that you know works. Finally, try a new printer cable.
	The wrong printer driver was selected.	Check the application's printer selection menu to make sure that your printer is selected.

Problem	Possible Cause	Solution
The printer prints, but the text is wrong, garbled, or incomplete. (continued)	The software application is malfunctioning.	Try printing a job from another application.
Pages print, but are totally blank.	The toner cartridge is defective or out of toner.	Replace the toner cartridge.
	The file may have blank pages.	Check the file to make sure that it does not contain blank pages.
	Some parts, such as the controller, the board, may be defective.	Contact a service representative.
The illustrations print wrong in Adobe Illustrator.	The setting in the software application is wrong.	Print the document with the **Bitmap Printing** checkbox in the Print dialog box empty.

ATTENTION: The lifetime of the transfer roller

If you have any printing problem after your printer prints about 28,000 pages, you must contact the customer service to replace the transfer roller.

Clearing Paper Jams

Occasionally, paper can become jammed during a print job. Some of the causes include:

- The paper tray is loaded improperly or overfilled.
- The paper tray has been pulled out during a print job.
- The top cover has been opened during a print job.
- Paper that does not meet paper specifications has been used. See "Paper Specifications" on page A.2.
- Paper that is outside of the supported size range has been used. See "Paper Specifications".

If a paper jam occurs, the **Paper** and the **Error** lights remain lit on the control panel. Find and remove the jammed paper. If the location of the paper jam is not obvious, look first inside the printer.

Output Area

Note: Paper jams in this area may result in loose toner on the page. If you get any toner on your clothes, wash them in cold water because hot water will set the toner into the fabric.

1 Pull the jammed paper carefully out of the output stacker.

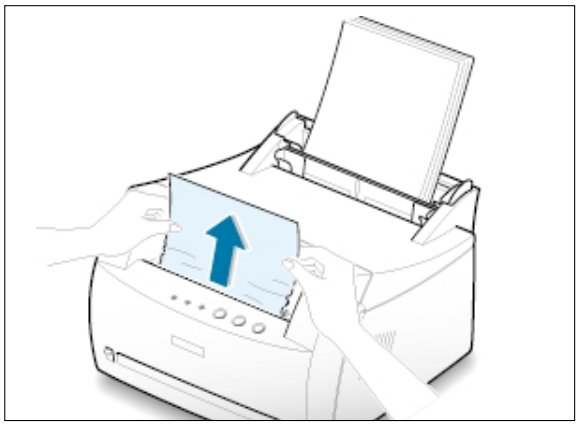

If paper is jammed in the face-up output slot, carefully remove the paper as shown.

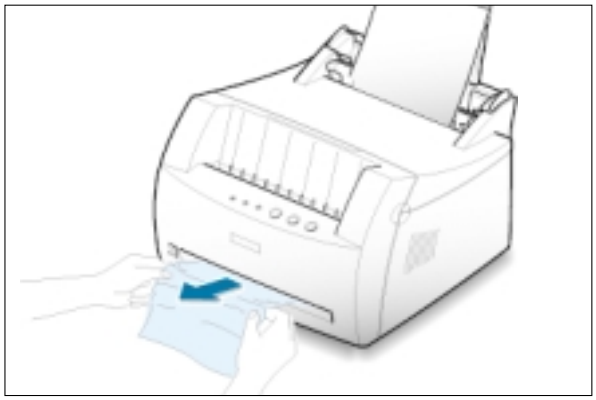

5 Open and close the front cover. Printing can be resumed.

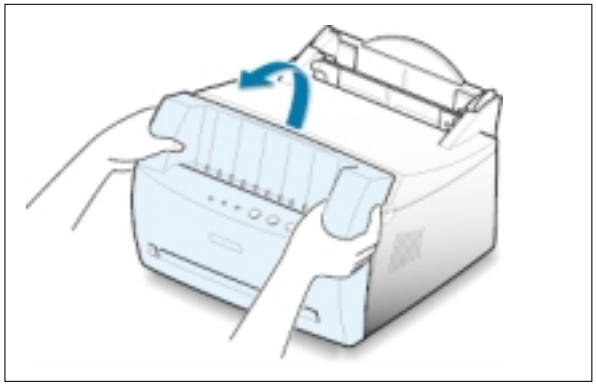

Input Area

Note: If paper has entered the toner cartridge area, follow the instructions on page 7.8. It is easier to remove such jams from the inside of the printer than the paper input area.

1 Carefully pull the jammed paper out of the input tray.

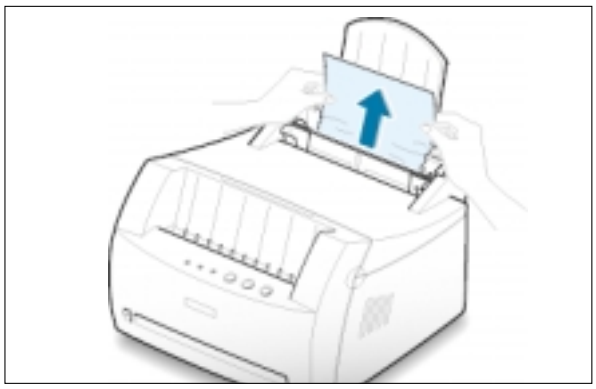

2 Open and close the front cover to resume printing.

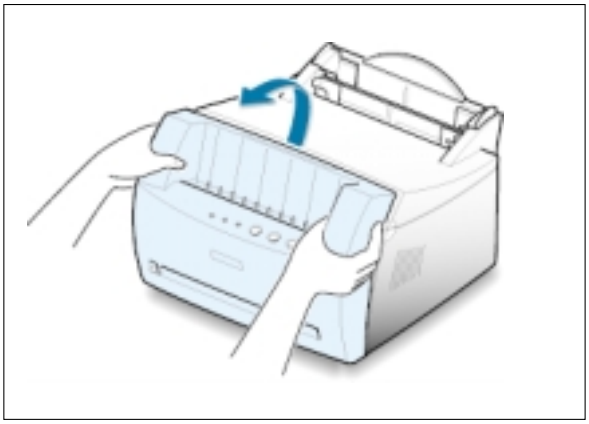

Note: If the **Paper** and the **Error** lights do not turn off, there is still jammed paper inside the printer. Check the inside of the printer.

Inside the Printer

Note: Paper jams in this area may result in loose toner on the page. If you get any toner on your clothes, wash them in cold water because hot water will set the toner into the fabric.

1 Grasp the front cover by both sides of the cover and pull it toward you to open.

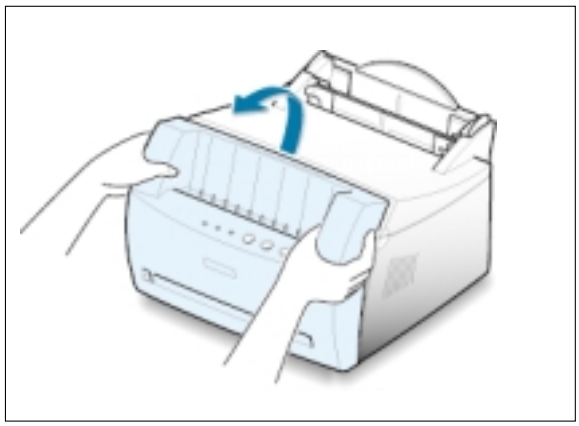

2 Remove the toner cartridge.

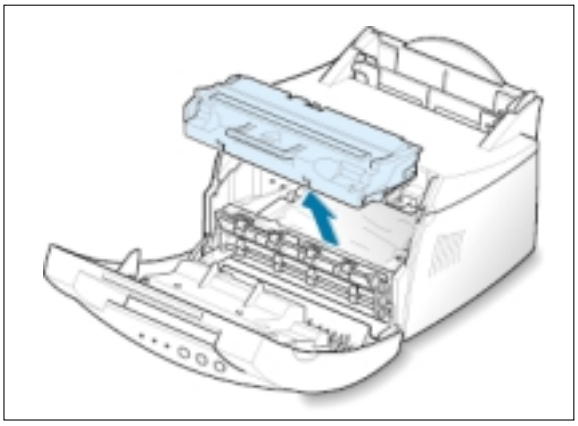

CAUTION: To prevent damage to the toner cartridge, do not expose it to light for more than a few minutes. Place a piece of paper over the top of the toner cartridge to shield it while it is out of the printer.

3 Gently pull the paper toward you to remove it from the printer.

Make sure that there is no paper remaining inside the printer.

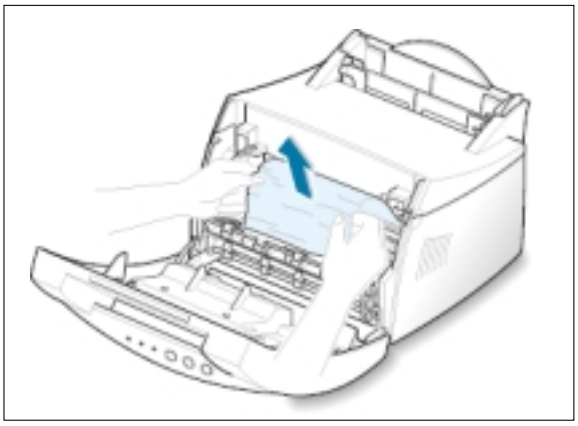

4 Reinsert the toner cartridge and close the front cover. Printing can be resumed.

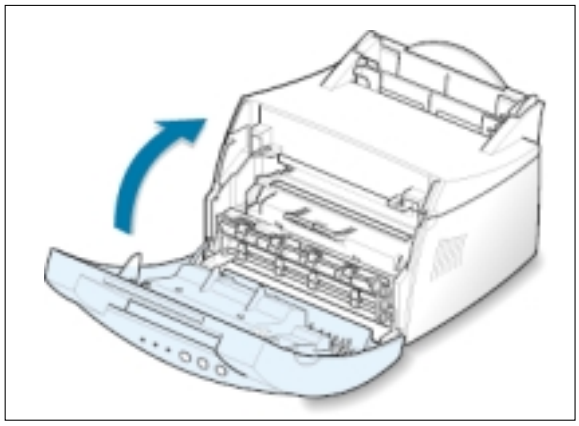

Tips for Avoiding Paper Jams

By selecting correct paper types and loading them properly, you should be able to avoid most paper jams. If paper jams occurs, follow the steps outlined in "Clearing Paper Jams" on page 7.6. If jams occur frequently, make sure you are following these tips to avoid jams.

- Follow the procedures in "**Load Paper**" on page 2.4 to load the paper properly. Make sure the adjustable guides are positioned correctly.
- Do not overload the automatic input tray. Make sure the paper is under the paper capacity mark on the inside of the tray.
- Do not remove the paper from the input tray while print jobs are in process.
- Flex, fan and straighten the paper before loading it.
- Do not load wrinkled, creased, damp or highly curled paper.
- Do not mix paper types in the input tray.
- Use only recommended print media. See "Paper Specifications" on page A.2.
- Make sure that the recommended print side is facing up when loading the paper into both input trays.
- Keep print media stored in an acceptable environment. See "Printer and Paper Storage Environment" on page A.6.

Solving Print Quality Problems

Print Quality Checklist

General print quality problems can be solved by following the checklist below.

- Redistribute the toner in the toner cartridge (see page 6.2).
- Clean the inside of the printer (see page 6.4).
- Adjust the print resolution from the printer properties (see page 5.11).
- Check to make sure that Toner Save Mode is off (see page 5.6).
- Troubleshoot general printing problems (see page 7.2).
- Install a new toner cartridge, then check print quality again (see page 2.2).

Solving Print Quality Problems

Problem	Solution
Light or faded print 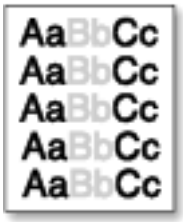 	If a vertical white streak or faded area appears on the page: • The toner supply is low. You may be able to temporarily extend the toner cartridge life. See "Redistributing the Toner" on page 6.2. If this does not improve the print quality, install a new toner cartridge. • The paper may not meet paper specifications (for example, the paper is too moist or too rough). See "Paper Specifications" on page A.2. • If the whole page is light, the print resolution setting is too light or Toner Save Mode may be on. Adjust the print resolution and Toner Save Mode within the printer properties. See page 5.6 and 5.11 respectively. • A combination of faded and smeared defects may indicate that the toner cartridge needs cleaning. See "Cleaning the Printer" on page 6.4. • The surface of LSU part inside the printer may be dirty. Clean the LSU. See "Cleaning the Printer".

Problem	Solution
Toner specks	• The paper may not meet paper specifications (for example, the paper is too moist or too rough). See "Paper Specifications" on page A.2. • The transfer roller may be dirty. See "Cleaning the Inside" on page 6.4. • The paper path may need cleaning. See "Cleaning the Inside".
Dropouts	If faded areas, generally rounded, occur randomly on the page: • A single sheet of paper may be defective. Try reprinting the job. • The moisture content of the paper is uneven or the paper has moist spots on its surface. Try a different kind or brand of paper. See "Paper Specifications" on page A.2. • The paper lot is bad. The manufacturing processes can cause some areas to reject toner. Try a different kind or brand of paper. • The toner cartridge may be defective. See "Vertical repetitive defects" on the next page. • If these steps do not correct the problems, contact a service representative.
Vertical lines	If black vertical streaks appear on the page: • The photosensitive drum inside the toner cartridge has probably been scratched. Install a new toner cartridge. If white vertical streaks appear on the page: • The surface of LSU part inside the printer may be dirty. Clean the LSU (see page 6.4).

Problem	Solution
Gray background 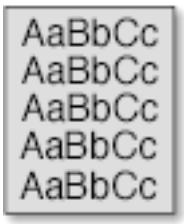 	If the amount of background toner shading becomes unacceptable, the procedures below may help to clear the condition: • Change the paper to a lighter basis weight. See "Paper Specifications" on page A.2. • Check the printer's environment; very dry (low humidity) or high humidity (higher than 80 % RH) conditions can increase the amount of background shading. • Install a new toner cartridge.
Toner smear 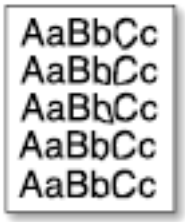 	• Clean the inside of the printer. See "Cleaning the Inside" on page 6.4. • Check the paper type and quality. See "Paper Specifications" on page A.2. • Try installing a new toner cartridge.
Vertical repetitive defects 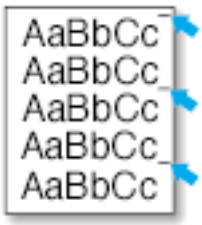 	If marks repeatedly appear on the printed side of the page at even intervals: • The toner cartridge may be damaged. If a repetitive mark occurs every 95 mm or 38 mm on the page, print a cleaning sheet several times to clean the cartridge (see page 6.5). After the printout, if you still have the same problems, install a new toner cartridge. • Parts in the printer may have toner on them. If the defects occur on the back of the page, the problem will likely correct itself after a few more pages. • The fusing assembly may be damaged. Contact a service representative.

Problem	Solution
Background scatter 	Background scatter results from bits of toner distributed on the printed page. • The paper may be too damp. Try printing with a different batch of paper. Do not open packages of paper until necessary so that the paper does not absorb too much moisture from the air. • If background scatter occurs on an envelope, change your printing layout to avoid printing over areas that have overlapping seams on the reverse side. Printing on seams can cause this problem. • If background scatter covers the entire surface of a printed page, adjust the print resolution through your software application or the printer properties.
Misformed characters 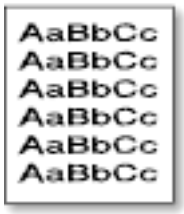	• If characters are improperly formed, producing hollow images, the paper stock may be too slick. Try a different paper. See "Paper Specifications" on page A.2. • If characters are improperly formed, producing a wavy effect, the scanner unit may need service. Verify that it also occurs on a demo page by pressing the **Demo** button on the control panel when printer is ready. If you need service, contact a service representative.
Page skew 	• Check the paper type and quality. See "Paper Specifications" on page A.2. • Make sure that the paper or other media is loaded correctly and the guides are not too tight or too loose against the paper stack.

Problem	Solution
Curl or wave	• Check the paper type and quality. Both high temperature and humidity will cause paper curl. See "Paper Specifications" on page A.2. • Turn over the stack of paper in the input tray. Also try rotating the paper 180° in the input tray. • Push the output lever and try printing to the face up output slot.
Wrinkles or creases 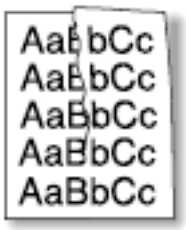	• Make sure that paper is loaded properly. • Check the paper type and quality. See "Paper Specifications" on page A.2. • Push the output lever and try printing to the face up output slot. • Turn over the stack of paper in the input tray. Also try rotating the paper 180° in the feeder.
Back of printouts dirty 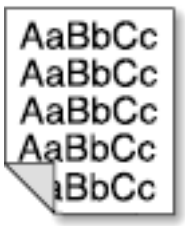	• The transfer roller may be dirty. See "Cleaning the Inside" on page 6.4. • Check if the toner is leaking. Clean inside the printer.
Black pages 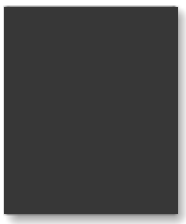	• The toner cartridge may not be installed properly. Remove the cartridge and reinsert it. • The toner cartridge may be defective and need replacing. Install a new toner cartridge. • The printer may require repairs. Contact a service representative.

Problem	Solution
Loose toner 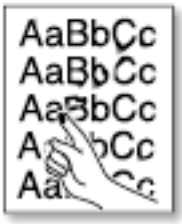 	• Clean the inside of the printer. • Check the paper type and quality. See "Paper Specifications" on page A.2. • Try installing a new toner cartridge. • If the problem persists, the printer may require repairs. Contact a service representative.
Character Voids 	Character voids are white areas within the parts of characters that should be solid black: • If you are using transparencies when you experience this problem, try another type of transparency. (Because of the composition of transparency media, some character voids are normal.) • You may be printing on the wrong surface on the paper. Remove the paper and turn it around. • The paper may not meet paper specifications. See "Paper Specifications" on page A.2.
Horizontal stripes 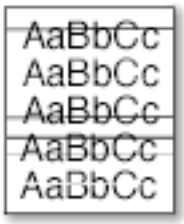 	If horizontally aligned black streaks or smears appear: • The toner cartridge may be installed improperly. Remove the cartridge and reinsert it. • The toner cartridge may be defective. Install a new toner cartridge. • If the problem persists, the printer may require repairs. Contact a service representative.

Troubleshooting Error Messages

When the printer experiences an error, the control panel will indicate error messages by the indicator lights. Find the light pattern below that matches the printer light pattern and follow the solutions to clear the error.

Printer Light Patterns

Light status legend

symbol for "light off"

symbol for "light on"

symbol for "light blinking"

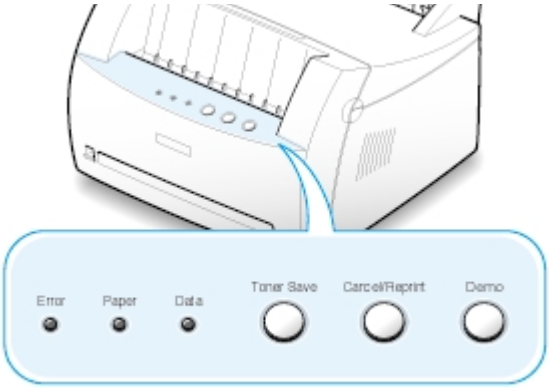

Error Paper Data

Power off

- Check the power cord and the power switch if your printer does not generate a response.
- Make sure that the printer is powered with the specified AC voltage.

Error Paper Data

Paper jam, or no toner cartridge

Paper is jammed inside the printer or the toner cartridge is not installed.

- Clear the paper jam. See "Clearing Paper Jams" on page 7.6.
- Make sure that the toner cartridge is correctly installed in the printer.

Error Paper Data

Paper out

The printer is out of paper in the input tray.

- Load paper into the tray. For the automatic input tray, loading paper will cancel this message and allow you to continue with the print job. For the manual input tray, press the **Demo** button after loading paper.

Error Paper Data

Waiting the Demo button to be pressed

While printing in the manual feed mode, the printer is waiting the **Demo** button to be pressed.

- Press the **Demo** button on the control panel to start printing. You must press the button to print each page after loading paper into the manual input tray.

Error Paper Data

Door open

The printer front cover may be opened.

- Check that the printer front cover door is closed properly.

Error Paper Data

Canceling a job or memory out

While your printer is canceling a job (see page 5.5), the **Error** light blinks. When canceling is completed, this message will automatically cleared. Otherwise, the printer memory ran out of memory in the middle of a print job. The page being printed may have been too complex for the memory capacity of the printer. Press the **Cancel/Reprint** button to cancel the current job.

- Try to free some printer memory by removing any unnecessary fonts, macros, or any data currently in printer memory.
- Simplify the image or print at a lower resolution.

Error Paper Data

System error - Fuser or LSU error

- Reset the printer by briefly turning the printer off and back on again.
- If the error persists, contact the service representative.

Common Windows Problems

Problem	Possible Cause and Solution
"File in Use" message appears during installation.	Quit all software application. Remove all software from the StartUp Group, then restart Windows. Reinstall the printer driver.
"Error Writing to LPTx" message appears.	• Make sure the cables are connected correctly, the printer is on, and the **Data** light on the control panel is on. • If bi-directional communication is not turned on in the driver, it will also cause this message. • From the **Start** menu, select **Settings**, then **Printers**. Right-click on the Samsung ML-1200 Series printer icon and select **Properties**. From the **Details** tab, click on **Port Settings**. Remove check from **Check Port State before Printing** box and click **OK**. From **Spool Settings**, select **Print Directly to Printer** and click **OK**. Try printing again.
"General Protection Fault", "Exception OE", "Spool32", or "Illegal Operation" messages appear.	• Close all other applications, reboot Windows, and try printing again. • Delete all temp files from the Temp sub-directory. You can determine the name of the directory by editing the AUTOEXEC.BAT file and locking for the statement, "**Set Temp =**". The name after this statement is the temp directory. It is usually **C:\temp** by default, but can be redefined.

Note: Refer to Microsoft Windows 9x, Me, NT 4.0 or 2000 documentation that came with your PC for further information on Windows error messages.

Appendix

This appendix provides information on the following topics:

- Printer Specifications
- Paper Specifications
- Using Your Printer with a USB cable
- Using Your Printer with Macintosh
- Linux Driver Installation

Printer Specifications

Item	Specification and Description
Print Speed	12 PPM
Resolution	600 dpi
First Printing Time	Less than 12 seconds
WarmUp Time	30 seconds
Power Rating	AC 100 ~ 127 V (USA, Canada) / 220 ~ 240 V (Others), 50 / 60 Hz
Power Consumption	250 W average during operation / Less than 10 W in sleep mode
Acoustic Noise	Stand by: Less than 35 dB; Operating: Less than 47 dB
Toner Supply	Single cartridge
Toner Cartridge Life	2,500 pages (for starter, 1,000 pages), 5% area coverage
Duty Cycle	Monthly: 12,000 pages maximum
Weight	6.5 Kg / 13.4 lb.
Package Weight	Paper: 1.83 Kg Plastic: 0.33 Kg
External Dimensions (W x D x H)	329 x 355 x 231 mm / 12.95 x 13.98 x 9.09 in.
Operating Environment	Temperature:10 ~ 32 °C / 50 ~ 90 °F; Humidity: 20 ~ 80 % RH
Emulation	PrinThru
Random Access Memory (RAM)	8 MB (nonexpandable)
Interface	• IEEE 1284 Bidirectional Parallel - Modes supported: Compatible, Nibble, Byte, ECP • USB Interface Standard - USB 1.0 compliant - 12 Mbps 1 port

Paper Specifications

Overview

This printer accepts a variety of media, such as cut-sheet paper (including up to 100 % recycled fiber content paper), envelopes, labels, transparencies and custom-size paper. Properties such as weight, composition, grain and moisture content are important factors affecting printer performance and output quality. Paper that does not meet the guidelines outlined in this manual can cause the following problems:

- Poor print quality
- Increased paper jams
- Premature wear on the printer, requiring repairs.

Notes:

- Some paper may meet all of the guidelines in this manual and still not produce satisfactory results. This might be the result of improper handling, unacceptable temperature and humidity levels, or other variables over which Samsung has no control.
- Before purchasing large quantities of paper, make sure that the paper meets the requirements specified in this user guide. Always test paper before buying large quantities.

CAUTION: Using paper that does not meet this specifications may cause problems for the printer, requiring repairs. This repair is not covered by the Samsung warranty or service agreements.

Supported Sizes of Paper

<table>
<tr><th>Paper</th><th colspan="2">Dimensions</th><th>Weight</th><th>Capacity[a]</th></tr>
<tr><td>Letter</td><td colspan="2">8.5 X 11 in. (216 X 279 mm)</td><td rowspan="6">16 to 24 lb Bond (60 to 105 g/m²)</td><td rowspan="6">• 150 sheets of 20 lb Bond (75 g/m²) paper for the automatic input tray
• 1 sheet paper for the manual input tray</td></tr>
<tr><td>A4</td><td colspan="2">210 X 297 mm (8.3 X 11.7 in.)</td></tr>
<tr><td>Executive</td><td colspan="2">7.3 X 10.5 in. (191 X 267 mm)</td></tr>
<tr><td>Legal</td><td colspan="2">8.5 X 14 in. (216 X 356 mm)</td></tr>
<tr><td>B5 (JIS)</td><td colspan="2">182 X 257 mm (7.2 X 10 in.)</td></tr>
<tr><td>Folio</td><td colspan="2">216 X 330 mm (8.5 X 13 in.)</td></tr>
<tr><td rowspan="2">Minimum Size (custom)</td><td>Automatic Input Tray</td><td>76 X 127 mm (3 X 5 in.)</td><td rowspan="3">60 to 163 g/m² Bond (16 to 43 lb)</td><td rowspan="6">• 5 sheets of 20 lb Bond (75 g/m²) paper for the automatic input tray
• 1 sheet paper for the manual input tray</td></tr>
<tr><td>Manual Input Tray</td><td>76 X 127 mm (3 X 5 in.)</td></tr>
<tr><td>Maximum Size (custom)</td><td colspan="2">216 X 356 mm (8.5 X 14 in.)</td></tr>
<tr><td>Transparency</td><td colspan="2" rowspan="3">Same minimum and maximum paper sizes as listed above.</td><td rowspan="2">Thickness: .10 X .14 mm (0.0039 X 0.0055 in.)</td></tr>
<tr><td>Labels[b]</td></tr>
<tr><td>Envelopes</td><td>up to 90 g/m² (16-24 lb)</td></tr>
</table>

a. Capacity may vary depending on media weight and thickness, and environmental conditions.
b. Smoothness - 100 to 250 (Sheffield)

Note: You may experience some paper jams when using any media with a length of less than 127 mm (5 in.). For optimum performance, make sure you are storing and handling the paper correctly. Please refer to “Printer and Paper Storage Environment” on page A.6.

Guidelines for Using Paper

For best results, use conventional 90 g/m^2 (24 lb) paper. Make sure the paper is of good quality, and free of cuts, nicks, tears, spots, loose particles, dust, wrinkles, voids, and curled or bent edges.

If you are unsure of what type of paper you are loading (such as bond or recycled), check the label on the package of the paper.

The following problems with paper cause print quality deviations, jamming, or even damage to the printer.

Symptom	Problem with Paper	Solution
Poor print quality or toner adhesion problems with feeding	Too moist, too rough, too smooth, or embossed; faulty paper lot	Try another kind of paper, between 100 ~ 250 Sheffield, 4 ~ 5 % moisture content.
Dropout, jamming, curl	Stored improperly	Store paper flat in its moisture-proof wrapping.
Increased gray background shading /printer wear	Too heavy	Use lighter paper, open the rear output tray.
Excessive curl problems with feeding	Too moist, wrong grain direction or short-grain construction	• Open the rear output tray. • Use long-grain paper.
Jamming, damage to printer	Cutouts or perforations	Do not use paper with cutouts or perforations.
Problems with feeding	Ragged edges	Use good quality paper

Notes:

- Do not use letterhead paper that is printed with low-temperature inks, such as those used in some types of thermography.
- Do not use raised or embossed letterhead.
- The printer uses heat and pressure to fuse toner to the paper. Make sure that any colored paper or preprinted forms use inks that are compatible with this fusing temperature (200 °C or 392 °F for 0.1 second).

Paper Specifications

Category	Specifications
Acid Content	5.5 ~ 8.0 pH
Caliper	.094 ~ .18 mm (3.0 ~ 7.0 mils)
Curl in Ream	Flat within 5 mm (.02 in.)
Cut Edge Conditions	Cut with sharp blades with no visible fray.
Fusing Compatibility	Must not scorch, melt, offset, or release hazardous emissions when heated to 200 °C (392 °F) for .1 second.
Grain	Long Grain
Moisture Content	4 % ~ 6 % by weight
Smoothness	100 ~ 250 Sheffield

Paper Output Capacity

Output Tray	Capacity
Face-down output tray	100 sheets of 20 lb bond (75 g/m^2) paper
Face-up output slot	1 sheet of 20 lb bond (75 g/m^2) paper

Printer and Paper Storage Environment

Ideally, the printer and paper storage environment should be at or near room temperature, and not too dry or humid. Remember that paper is hygroscopic; it absorbs and loses moisture rapidly.

Heat works with humidity to damage paper. Heat causes the moisture in paper to evaporate, while cold causes it to condense on the sheets. Heating systems and air conditioners remove most of the humidity from a room. As paper is opened and used, it loses moisture, causing streaks and smudging. Humid weather or water coolers can cause the humidity to increase in a room. As paper is opened and used it absorbs any excess moisture, causing light print and dropouts. Also, as paper loses and gains moisture it can distort. This can cause paper jams.

As a result, paper storage and handling are as important as the paper-making process itself. Paper storage environmental conditions directly affect the feed operation.

Care should be taken not to purchase more paper than can be easily used in a short time (about 3 months). Paper stored for long periods may experience heat and moisture extremes, which can cause damage. Planning is important to prevent damage to large supply of paper.

Unopened paper in sealed reams can remain stable for several months before use. Opened packages of paper have more potential for environment damage, especially if they are not wrapped with a moisture-proof barrier.

The paper storage environment should be properly maintained to ensure optimum printer performance. The required condition is 20 ° to 24 °C (68° to 75 °F), with a relative humidity of 45 % to 55 %. The following guidelines should be helpful when evaluating the paper's storage environment:

- Paper should be stored at or near room temperature.
- The air should not be too dry or too humid (due to the hygroscopic properties of paper).
- The best way to store an opened ream of paper is to rewrap it tightly in its moisture-proof wrapping. If the printer environment is subject to extremes, unwrap only the amount of paper to be used during the day's operation to prevent unwanted moisture changes.

Envelopes

Envelope construction is critical. Envelope fold lines can vary considerably, not only between manufacturers, but also within a box from the same manufacturer. Successful printing on envelopes depends upon the quality of the envelopes. When selecting envelopes, consider the following components:

- **Weight:** The weight of the envelope paper should not exceed 90 g/m^2 (24 lbs), otherwise, jamming may occur.
- **Construction:** Prior to printing, envelopes should lie flat with less than 6 mm (0.25 in.) curl, and should not contain air.
- **Condition:** Envelopes should not be wrinkled, nicked, or otherwise damaged.
- **Temperature:** You should use envelopes that are compatible with the heat and pressure of the printer.
- **Size:** You should use only envelopes within the following size ranges.

	Minimum	Maximum
Automatic input tray	76 X 127mm (3 X 5 in.)	216 X 356 mm (8.5 X 14 in.)
Manual input tray	76 X 127 mm (3 X 5 in.)	

Note: You may experience some paper jams when using any media with a length of less than 127 mm (5 in.). This may be caused by paper that has been affected by environmental conditions. For optimum performance, make sure you are storing and handling the paper correctly. Please refer to “Printer and Paper Storage Environment” on page A.6.

Envelopes with Double Side Seams

Double side-seams construction has vertical seams at both ends of the envelope rather than diagonal seams. This style may be more likely to wrinkle. Be sure the seam extends all the way to the corner of the envelope as illustrated below.

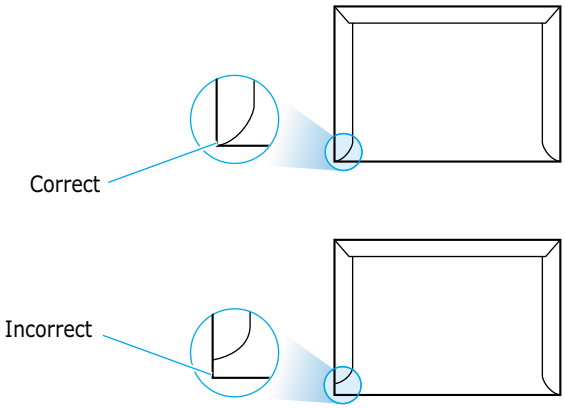

Envelopes with Adhesive Strips or Flaps

Envelopes with a peel-off adhesive strip or with more than one flap that folds over to seal must use adhesives compatible with the heat and pressure in the printer. The extra flaps and strips might cause wrinkling, creasing, or even jams and may even damage the fuser.

Envelope Margins

The following gives typical address margins for a commercial #10 or DL envelope.

Type of Address	Minimum	Maximum
Return address	15 mm (0.6 in.)	15 mm (0.6 in.)
Delivery address	51 mm (2 in.)	89 mm (3.5 in.)

Notes:

- For best print quality, position margins no closer than 15 mm (0.6 in.) from the edges of the envelope.
- Avoid printing over the area where the envelope's seams meet.

Envelope Storage

Proper storage of envelopes helps contribute to print quality. Envelopes should be stored flat. If air is trapped in an envelope, creating an air bubble, then the envelope may wrinkle during printing. See "Printing on Envelopes" on page 4.7.

Labels

CAUTIONS:

- To avoid damaging the printer, use only labels recommended for laser printers.
- To prevent serious jams, always use the face-up output slot.
- Never print on the same sheet of labels more than once or print on a partial sheet of labels.

When selecting labels, consider the quality of each component:

- **Adhesives:** The adhesive material should be stable at 200 °C (392 °F), the printer's fusing temperature.
- **Arrangement:** Only use labels with no exposed backing between them. Labels can peel off sheets with spaces between the labels, causing serious jams.
- **Curl:** Prior to printing, labels must lie flat with no more than 13 mm (.5 in.) of curl in any direction.
- **Condition:** Do not use labels with wrinkles, bubbles, or other indications of separation.

See "Printing on Labels" on page 4.10.

Transparencies

Transparencies used in the printer must be able to withstand 200 °C (392 °F), the printer's fusing temperature.

CAUTION: To avoid damaging the printer, use only transparencies recommended for use in laser printers.

See "Printing on Transparencies" on page 4.11.

Using Your Printer with a USB Cable

If you have a USB (Universal Serial Bus) port enabled on your computer, and if your computer is running Windows 98, you can connect your ML-1200 Series printer to the USB chain of devices.

Installing the Printer Software

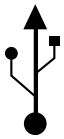

If you have a USB (Universal Serial Bus) port enabled on your computer, and if your computer is running Windows 98, you can connect your ML-1200 Series printer to the USB chain of devices.

1. Install PrinThru driver

To operate your printer with a Windows PC, you must install the PrinThru printer driver. Place the CD-ROM in the CD-ROM drive and perform the instructions on page 2.8.

2. Connect printer with USB cable and install USB driver

1 Make sure that both the printer and computer are turned **ON**.

2 Plug one end of the USB cable into the USB port on the printer.

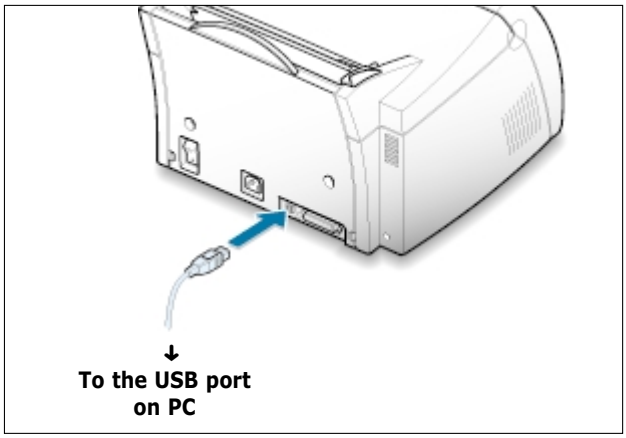

3 Plug the other end into the USB port on the computer.

4 The Add New Hardware Wizard dialog box appears. Click **Next**.

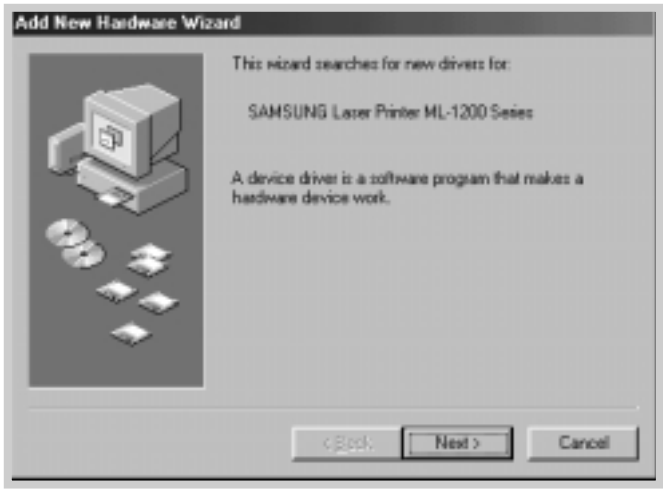

5 Check **Search for the best driver for your device** and click **Next**.

6 Check **CD-ROM drive** and click **Browse**, then choose **D:\USB** (where **D** is the drive letter for the CD-ROM drive).

7 Click **Next**. The USB driver will be installed.

8 Follow the instructions on the screen to complete the installation.

3. Set your PC printer port

1 From the **Start** menu, select **Settings**, then select **Printers**.

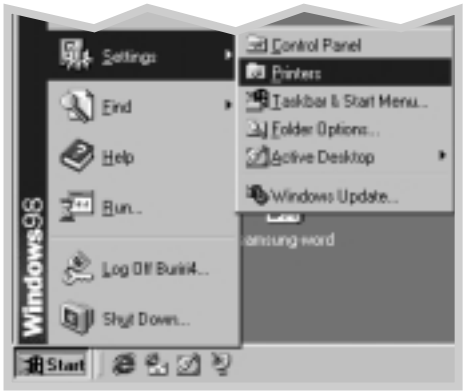

2 Select the **Samsung ML-1200 Series** printer icon in the **Printers** folder.

3 Select **Properties** from the **File** menu.

4 Click the **Details** tab. Select **SSUSB: (ML-1210)** in the **Print to the following port** box. Click **OK**. The setup is now completed.

Frequently Asked Questions About USB

Q What is USB?

A Universal Serial Bus (USB) makes it easy to connect devices to your computer without having to open your PC. USB uses a standard port and plug combination for connecting devices like printers, modems, scanners, and digital cameras. It also offers the benefit of being able to easily add, remove, and move devices.

Because USB is a relatively new technology, we recommended using a parallel printing connection. However, USB is an option to customers who want to print from Windows 98 across the USB cable. If your computer's USB port is enabled and properly setup, you can connect your printer to it or to a chain of USB devices via a USB cable.

Q How can I determine if my computer's USB port is enabled?

A

1. In Windows 98, select **Start** → **Settings** → **Control Panel**.
2. Double-click the **System** icon.
3. Click the **Device Manager** tab.
4. Click the plus (+) icon before the **Universal Serial Bus Controller** item.

If you see a USB host controller and a USB root hub listed, USB is properly enabled. If you have multiple hubs on the USB chain, try connecting your printer to a different hub or to another USB device. Also, make sure the cable connections are firm. (USB hubs are hardware devices into which you can plug multiple USB cables.)

If you do not see these devices listed, refer to your computer's documentation or contact the manufacturer for more information on enabling and setting up USB. Remember, you can always use a parallel cable to connect your printer's parallel port to your computer. (If you decide to switch to a parallel cable connection, you may need to remove and reinstall the printer software.)

Q Can other users on my USB chain print to my ML-1200 Series printer on the USB chain?

A Yes. Windows 98 allows you to "share" your printer using software settings on your computer. After others on the USB chain have installed the printer software for your specific printer, they can print to your shared printer.

Q After I install my printer, why isn't my ML-1200 Series printer assigned to an LPT printer port in the Print dialog box of my software application?

A USB uses a different naming convention for USB devices. After the printer has been installed, you see **SSUSB:(your printer name)** instead of **LPT**.

Q How can I increase printing speed and quality?

A When operated on a USB chain, your printer may become slower if other USB devices are being used while you're printing. For optimal print performance, avoid using other devices in the USB chain while printing.

Using Your Printer with Macintosh

Your printer supports Macintosh system with a built-in USB interface. When you print a file from Macintosh, you can use the PrinThru driver to support your printer's major printing features.

System Requirements

To use your ML-1200 Series printer and its software with a Macintosh, your system should have:

Macintosh Hardware Requirement:

- One of the following Macintosh models:
  -Power Macintosh series (with external network connection)
  -Power Macintosh G3, G4
  -iMac series
  -PowerBook series
  -iBook series
- USB interface

Macintosh System Requirement:

System 8.6 or later

Installing Software for Macintosh

Connecting to Macintosh

You can connect the printer to your Macintosh using the USB interface.

1 Turn off the printer and computer.

2 Hold the USB cable so the icon faces up and connect it to your printer's USB connector.

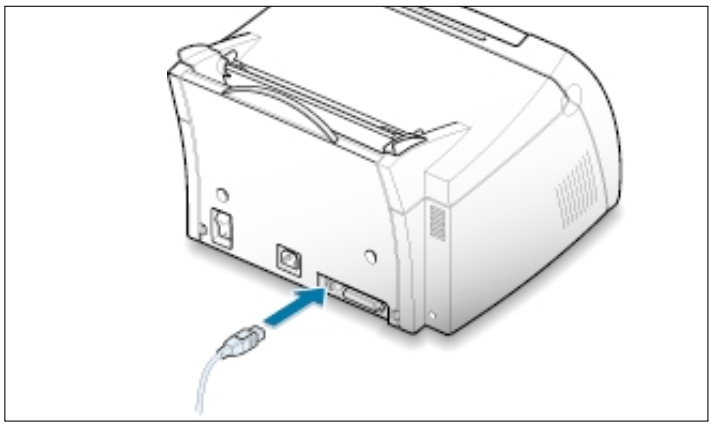

3 Connect the other end of the cable to an available USB port on your Macintosh computer. If you have any connecting problems, please refer to your computer documentation.

Note: If you are using a USB hub, connect the printer's cable to the first tier of the hub or the printer may malfunction. If the printer doesn't work with the hub, connect it directly to the USB port.

Installing Software

1 Turn on your computer and printer.

2 Insert the CD-ROM which came with your printer into the CD-ROM drive.

3 Double-click the **Samsung ML-1200 Series** on your Macintosh desktop.

4 Select the correct language, then click **Continue**.

5 Click **Install**.

6 After installation is complete, click **Quit**.

Choosing PrinThru Driver

1 From the **Apple** menu, select **Chooser**.

2 From the left pane of the Chooser window, click **SAMSUNG PrinThru**. Then the Samsung printer name will appear in the right pane of the Chooser window.

3 Click the Samsung PrinThru driver, and close the Chooser window.

4 You see the message box indicating that you have changed your current printer. Click **OK**.

5 Then you see the Samsung PrinThru printer icon is created as a desktop printer.

Printing from a Macintosh

When you print with a Macintosh, you need to check the printer software setting in each application you use. Follow these steps to print from a Macintosh:

1 Open a Macintosh application and select a file you want to print.

2 Open the **File** menu, and click **Page Setup** (**Document Setup** in some applications). You see the Page Setup dialog box.

3 Choose your paper size, orientation, paper type and other options and click **OK**.

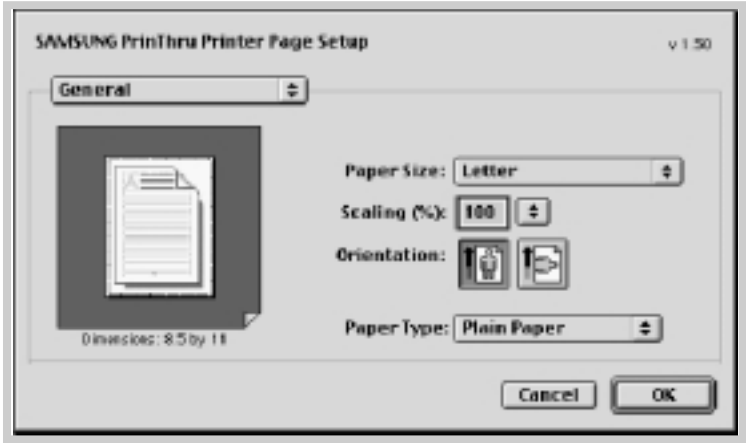

Choose Watermark if you want to add a watermark to each page in your document to emphasize its purpose or indicate how it should be handled. For details on the watermark option, see page 5.13.

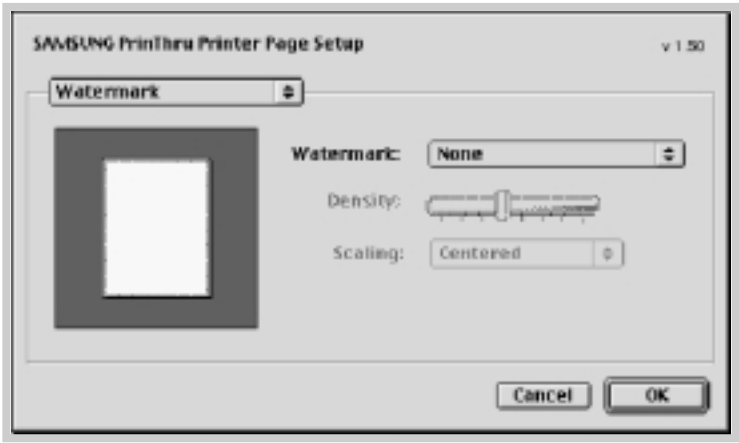

4 Now open the **File** menu and click **Print**. You see the main printer settings dialog box.

5 Choose the number of copies and indicate which pages you want to print. For advanced printing features, select the desired option. For details, see page A.21.

Select the desired option for advanced printing features.

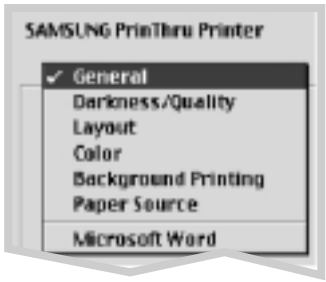

6 Click **Print** when you are finished checking your settings.

Advanced Printing

The Page Setup dialog box contains five categories of page setup properties. Listed below is the name of each property.
-Darkness/Quality
-Layout
-Color
-Background Printing
-Paper Source

Figures below display each property in the Page Setup dialog box.

Darkness / Quality

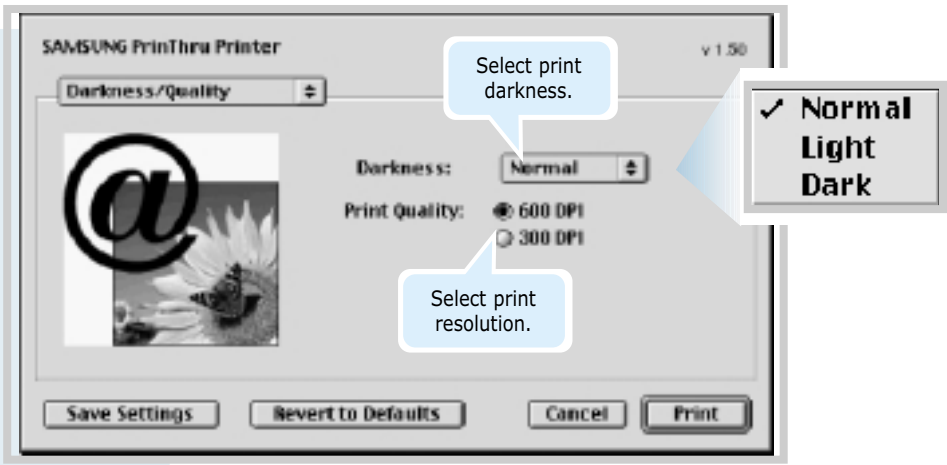

Layout

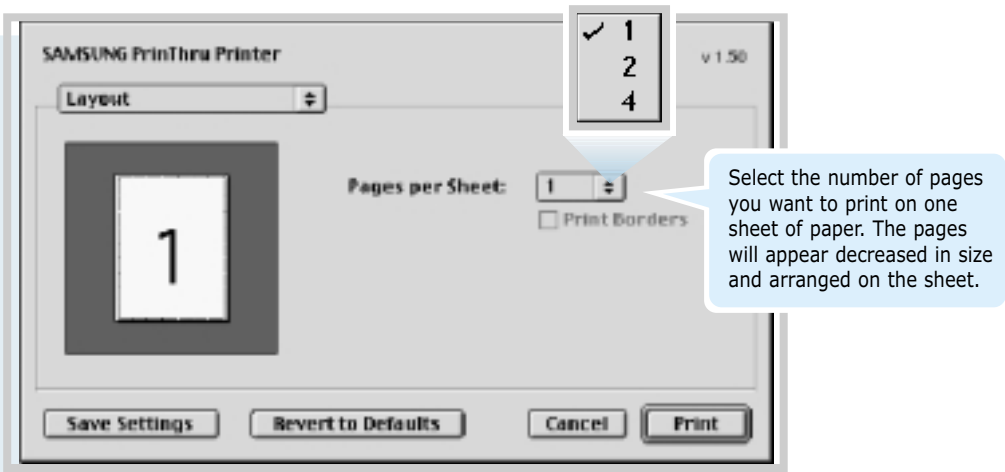

Color

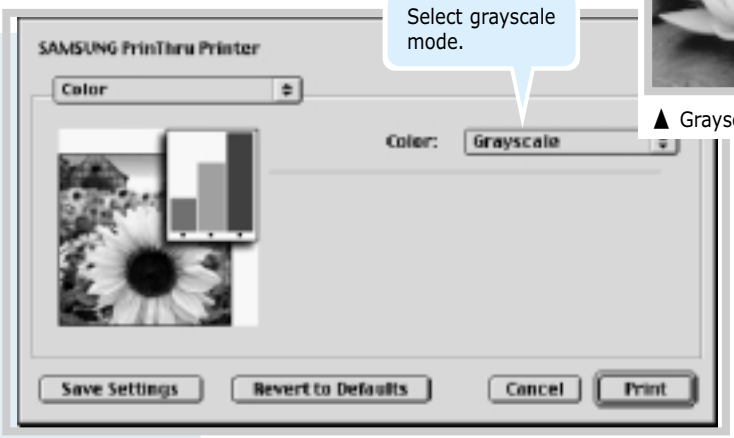

Select grayscale mode.

▲ Grayscale

▲ Black&White

Background Printing

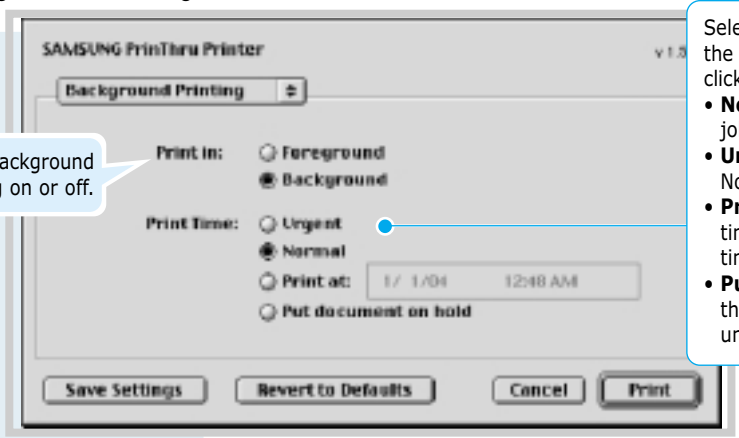

Turns background printing on or off.

Select a priority for your print job in the queue of jobs waiting to print, click one of the following:

- **Normal** to print in the order the job is received.
- **Urgent** to print before any Normal priority job.
- **Print at:** to print at the specific time you enter in the day and time in the fields to the right.
- **Put document on hold** to hold the print job in the print queue until you are ready to release it.

Paper Source

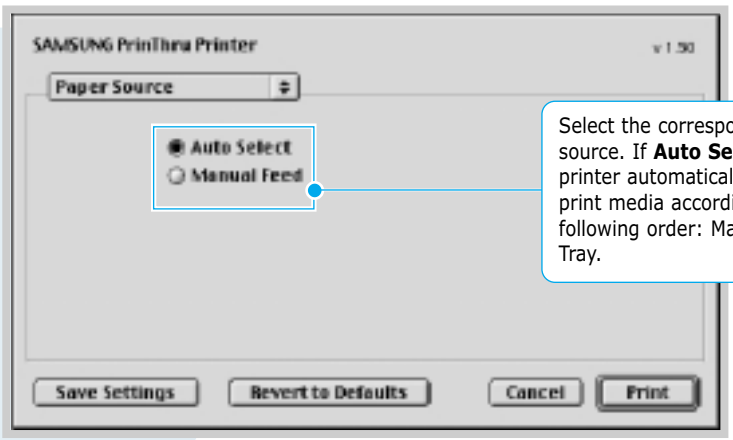

Select the corresponding paper source. If **Auto Select** is set, the printer automatically selects the print media according to the following order: Manual Tray, Auto Tray.

Linux Driver Installation

This Linux Configuration file is designed for PrinThru compatible Samsung ML-1200 Series printer and supports Linux RedHat 6.0 or higher, Mandrake, SuSE and etc. If you want to know the detail installion method for non-RedHat Linux, please refer to readme.txt file in Linux directory of driver CD.

Linux Driver Configuration

- Configuration Setup File
  a. /cdrom/linux/install/install.sh
  b. /cdrom/linux/install/ssprt.db
  c. /cdrom/linux/install/readme.txt

- Ghostscript Package file
  a. /cdrom/linux/gs5.10/ghostscript-5.10-10.i386.rpm
  b. /cdrom/linux/gs5.10/COPYING
  c. /cdrom/linux/gs5.50/ghostscript-5.50-2.i386.rpm
  d. /cdrom/linux/gs5.50/COPYING

Installation

To install the driver, open the x terminal screen and take the following steps:

1. Mount the CD-ROM drive.

Note: To mount the CD-ROM drive, you must be a super user or must be authorized to mount the CD-ROM by the super user. If you fail to mount the CD-ROM drive, ask the system administrator.

To mount the CD-ROM drive:

1. Insert the Samsung ML-1200 Series CD-ROM into the CD-ROM drive.

2. Mount the CD-ROM drive under a directory like **/mnt** in order to access the files on the CD-ROM:
   >mount -t iso9660 /dev/cdrom /mnt/cdrom

2. Install the Ghostscript.

Note: Ghostscript may already be installed in your Linux machine. To support Samsung printer PrinThru, you must update the ghostscript. If you are not sure whether the ghostscript is already installed in your machine, use the command: **>rpm -q ghostscript** (You can see the version of the ghostscript currently installed in your machine by this command.)

To update the ghostscript:

1. Change to the directory where the ghostscript is in by typing in:
   >cd/mnt/cdrom/linux/gs5.XX (where **/mnt/cdrom** is the CD-ROM directory you have mounted at step 1 and **XX** is the version of the ghostscript to be installed, 10 or 50.)

2. Delete the ghostscript currently installed in your machine by typing in:
   /mnt/cdrom/linux/gs5.XX>rpm -e --nodeps ghostscript

3. Install the ghostscript which is supplied in the Samsung ML-1200 Series CD-ROM by typing in:
   /mnt/cdrom/linux/gs5.XX/rpm -ivh ghostscript -5.XX-xx.i386.rpm

4. When # appears in the screen and the installation is completed, the ghostscript is successfully updated. To make sure, type in:
   /mnt/cdrom/linux/gs5.XX/rpm -q ghostscript

   If 'ghostscript-5.XX-xx' message appears, the installation is successfully completed.

3. Install setup script.

For details on installing the setup script, refer to the **/cdrom/linux/install/readme.txt** file.

Add the driver to the printer list by typing in:
/cdrom/linux/install>install.sh (or)
/cdrom/linux/install>./install.sh (if the path of the current working directly is not determined.)

4. Set up the printer filter.

To set up:

1. Run **printtool** at x terminal.
2. To add the printer driver, click the **Add** button.
3. In the Add a Printer Entry window, decide the printer type you will use. Select **Local Printer** if you have a PC-connected printer.
4. Click the **OK** button.
5. If the **Info** button appears, ignore it, then click the **OK** button.
6. The Edit xxxx Entry window opens (where xxxx is the printer type you have selected at step 3).

   If you are not an advanced user, do not change the **Names/Spool Directory/File Limit in Kb/Printer Device** option.
7. Click the **Select** button in the **Input Filter** to access filter setup.
8. Select **Samsung Printer PrinThru Compatible** for the Printer Type item. Then select the default resolution and paper size.
9. To save the setting, press the **OK** button.
10. In the Edit xxxx Entry window, press the **OK** button to complete the printer driver installation.
11. You can find that the printer driver is added to the driver window. Select **Quit** from the **PrintTool** menu.

GNU Ghostscript software, in directory /linux/gs5.10 and /linux/gs5.50 on this CD is Copyright (C) 1999 Aladdin Enterprise, Menlo Park, California, and other authors as indicated in its documentation.

This software is not subject to the End User License Agreement: your rights to this software are given by the GNU License, which is in a file called COPYING in that directory.

GNU Ghostscript should be available on all GNU site, such as **ftp://ftp.gnu.org/pub/gnu/**.

INDEX

A

automatic input tray
  loading paper 4.5
  paper source setting 5.3

C

cancel, print job 5.5
Cancel/Reprint button 3.2
cardstock, print 4.13
clean, printer 6.4
clean sheet, print 6.5
components 1.3
control panel
  buttons 3.1
  lights 3.3

D

Data light 3.3
Demo button 3.1
demo page, print 2.7
diskette, make, install software 2.13
driver
  access 5.1
  install 2.8
  in Linux A.23
  Macintosh A.16
  remove 2.11
  USB A.10

E

envelopes, print 4.7
Error light 7.17
error messages 7.17

F

face-down output tray 4.4
face-up output slot 4.4
features 1.1
fitting to a selected paper size 5.8

G

graphic properties 5.11

I

install
  Linux driver A.23
  Macintosh driver A.16
  printer software 2.8
  software from diskette 2.13
  toner cartridge 2.2
  USB driver A.10

J

jam see *paper jam*

L

labels, print 4.10
letterhead, print 4.12
Linux A.23
load, paper
  In the automatic input tray 2.4
  in the manual input tray 4.5

M

Macintosh A.16
manual input tray
  loading paper 4.5
  paper source setting 5.3
multiple pages on one sheet, print 5.7

N

network, setup 5.21
n-up printing 5.7

O

orientation 5.3
output lever 4.4
output location, select 4.4
overlays, print 5.16

P

page overlays, print 5.16
paper
  acceptable size and capacities 4.2, A.3
  choose 4.1
  guidelines 4.3, A.4
  load 2.4, 4.5
  specifications A.2
  storage environment A.6
paper jam, clear
  input area 7.6
  inside the printer 7.8
  output area 7.6
  tips avoiding paper jams 7.10
Paper light 3.3
paper orientation, setting 5.3
paper out, indication 3.3, 7.17
paper size, setting 5.3
paper source, setting 5.3
paper type, setting 5.3
parallel, connection 2.6
posters, printing 5.9
power save mode 5.12
print media see *paper*
printer light patterns 3.3, 7.17
print quality problem, solving
  back of printouts dirty 7.15
  background scatter 7.14
  black pages 7.15
  character voids 7.16
  checklist 7.11
  curl or wave 7.15
  dropouts 7.12
  gray background 7.13
  horizontal stripes 7.16
  light print or fade 7.11
  loose toner 7.16
  misformed characters 7.14
  page skew 7.14
  toner smear 7.13
  toner specks 7.12
  vertical lines 7.12
  vertical repetitive defects 7.13
  wrinkles or creases 7.15
printer driver see *driver*
printer software, install 2.8
printing
  cancel 5.5
  cleaning sheet 6.5
  demo page 2.7
  fitting to a selected paper size 5.8
  general problems, solving 7.2
  help 5.5
  multi pages on one sheet 5.7
  on a network envirionment 5.21
  page overlay 5.16
  posters 5.9
  quality problems, solving 7.11
  watermarks 5.13

problem, solving
  checklist 7.1
  common windows problems 7.19
  error messages 7.17
  general 7.2
  paper jam 7.6
  print quality 7.11

Q

quality, problems 7.11

R

reprint, last page 5.20
resolution 5.11

S

setup printer chapter 2
specifications
  paper A.2
  printer A.1
system error 7.18

T

toner cartridge
  clean 6.5
  install 2.2
  life expectancy 6.1
  recycle 6.1
  redistribute toner 6.2
  save toner 5.6
  storage 6.1
Toner Save button 3.2. 5.6
transparency, print 4.11
troubleshooting see *problem, solving*

U

uninstall, driver 2.11
unpack 2.1
USB cable, setup A.10

W

watermark, print 5.13

Visit us at:
http://www.samsungprinter.com

Home

Rev.1.00