SAMSUNG

SAMSUNG DIGITall
everyone's invited™

SAMSUNG LASER PRINTER

User's Guide

LASER PRINTER

ML-1250

This manual is provided for information purposes only. All information included herein is subject to change without notice. Samsung Electronics is not responsible for any damages, direct or indirect, arising from or related to use of this manual.

© 2001 Samsung Electronics Co., Ltd. All rights reserved.

- ML-1250 and Samsung logo are trademarks of Samsung Electronics Co., Ltd.
- IBM and IBM PC are trademarks of International Business Machines Corporation.
- Microsoft, Windows, Windows 9x, Windows Me, Windows NT and Windows 2000 are trademarks of Microsoft Corporation.
- PCL6 are trademarks of Hewlett-Packard Company.
- Apple, Macintosh, Power Macintosh, iMac and iBook are trademarks of Apple Computer, Inc.
- GNU Ghostscript software, Copyright (C) 1999. Aladdin Enterprise, Menlo Park, California, and other authors as indicated in its documentation.
- All other brand or product names are trademarks of their respective companies or organizations.

Contents

Chapter 1 Introduction

Special Features ---------- 1.1
Printer Components ---------- 1.3

Chapter 2 Setting Up Your Printer

STEP 1: Unpack Your Printer ---------- 2.1
STEP 2: Install the Toner Cartridge ---------- 2.2
STEP 3: Load Paper ---------- 2.4
STEP 4: Connect to the Computer with a Parallel Cable ----- 2.6
STEP 5: Turn on the Printer ---------- 2.7
STEP 6: Print a Demo Page! ---------- 2.7
STEP 7: Install the Printer Software ---------- 2.8
Installing Software from Diskette ---------- 2.13

Chapter 3 Using Control Panel

Control Panel Buttons ---------- 3.1
Control Panel Lights ---------- 3.3

Chapter 4 Print Media

Choosing Paper and Other Media ---------- 4.1
Selecting the Output Location ---------- 4.4
Loading Paper ---------- 4.5
Printing on Envelopes ---------- 4.7
Printing on Heavy Paper ---------- 4.9
Printing on Labels ---------- 4.10
Printing on Transparencies ---------- 4.11
Printing on Preprinted Paper ---------- 4.12
Printing on Card Stock or Custom-sized Media ---------- 4.13

Chapter 5 Printing Tasks

Printing a Document ---------- 5.1
Using Toner Save Mode ---------- 5.6
Printing Multiple Pages on One Sheet of Paper ---------- 5.7
Fitting Your Document to a Selected Paper Size ---------- 5.8
Printing Posters ---------- 5.9
Setting Graphic Properties ---------- 5.11
Printing Watermarks ---------- 5.14
Using Page Overlay ---------- 5.17
Reprinting the Last Page ---------- 5.21
Printing on a Network Environment ---------- 5.22

Chapter 6 Maintaining Your Printer

Maintaining Toner Cartridge ---------- 6.1
Cleaning the Printer ---------- 6.4

Chapter 7 Problem Solving

Troubleshooting Checklist ---------- 7.1
Solving General Printing Problems ---------- 7.2
Clearing Paper Jams ---------- 7.6
Solving Print Quality Problems ---------- 7.11
Troubleshooting Error Messages ---------- 7.17
Common Windows Problems ---------- 7.19

Appendix

Printer Specifications ---------- A.1
Paper Specifications ---------- A.2
Using Your Printer with a USB Cable ---------- A.10
Using Your Printer with Macintosh ---------- A.16
Printing from DOS Applications ---------- A.23
Linux Driver Installation ---------- A.28
Installing Optional Memory Card ---------- A.30

INDEX

Environmental and Safety Consideration

Laser Safety Statement

The printer is certified in the U.S. to conform to the requirements of DHHS 21 CFR, chapter 1 Subchapter J for Class I(1) laser products, and elsewhere is certified as a Class I laser product conforming to the requirements of IEC 825.

Class I laser products are not considered to be hazardous. The laser system and printer are designed so there is never any human access to laser radiation above a Class I level during normal operation, user maintenance, or prescribed service condition.

WARNING

Never operate or service the printer with the protective cover removed from Laser/Scanner assembly. The reflected beam, although invisible, can damage your eyes.

CAUTION - INVISIBLE LASER RADIATION WHEN THIS COVER OPEN. DO NOT OPEN THIS COVER.

VORSICHT - UNSICHTBARE LASERSTRAHLUNG, WENN ABDECKUNG GEÖFFNET. NICHT DEM STRAHL AUSSETZEN.

ATTENTION - RAYONNEMENT LASER INVISIBLE EN CAS D'OUVERTURE.EXPOSITION DAN GEREUSE AU FAISCEAU.

ATTENZIONE -RADIAZIONE LASER INVISIBILE IN CASO DI APERTURA. EVITARE L'ESPOSIZIONE AL FASCIO.

PRECAUCION -RADIACION LASER IVISIBLE CUANDO SE ABRE. EVITAR EXPONERSE AL RAYO.

ADVARSEL. - USYNLIG LASERSTRÅLNING VED ÅBNING NÅR SIKKERHEDSBRYDERE ER UDE AF FUNKTION. UNDGÅ UDSAETTELSE FOR STRÅLNING.

ADVARSER. - USYNLIG LASERSTRÅLNING NÅR DEKSEL ÅPNES. STIRR IKKE INN I STRÅLEN. UNNGÅ EKSPONERING FOR STRÅLEN.

VARNING - OSYNLIG LASERSTRÅLNING NÄR DENNA DEL ÄR ÖPPAND OCH SPÄRREN ÄR URKOPPLAD. BETRAKTA EJ STRÅLEN. STRÅLEN ÄR FARLIG.

VARO! - AVATTAESSA JA SUOJALUKITUS OHITETTAESSA OLET ALTTIINA NÄKYMÄTTÖMÄLLE LASERSÄTEILYLLE ÄLÄ KATSO SÄTEESEEN.

Ozone Safety

During normal operation, the Samsung ML-1250 Series printer produces ozone. The ozone produced does not present a hazard to the operator. However, it is advisable that the machine be operated in a well ventilated area.

If you need additional information about ozone, please request your nearest Samsung dealer.

Power Saver

This printer contains advanced energy conservation technology that reduces power consumption when it is not in active use.

When the printer does not receive data for an extended period of time, power consumption is automatically lowered.

The energy star emblem does not represent EPA endorsement of any product or service.

Radio Frequency Emissions

Fcc Regulations

This equipment has been tested and found to comply with the limits for a Class B digital device, pursuant to Part 15 of the FCC Rules. These limits are designed to provide reasonable protection against harmful interference in a residential installation. This equipment generates, uses and can radiate radio frequency energy and, if not installed and used in accordance with the instructions, may cause harmful interference to radio communications. However, there is no guarantee that interference will not occur in a particular installation.

If this equipment does cause harmful interference to radio or television reception, which can be determined by turning the equipment off and on, the user is encouraged to try to correct the interference by one or more of the following measures:

- Reorient or relocate the receiving antenna.
- Increase the separation between the equipment and receiver.
- Connect the equipment into an outlet on a circuit different from that to which the receiver is connected.
- Consult the dealer or an experienced radio/TV technician for help.

Do not make any changes or modifications to the equipment unless otherwise specified in the manual. If such changes or modifications should be made, you must first stop operation of the equipment.

Use of shielded cable is required to comply with Class B limits in Subpart B of Part 15 of FCC Rules.

CAUTION: Changes or modifications not expressly approved by the manufacture responsible for compliance could void the user's authority to operate the equipment.

Canadian Radio Interference Regulations

This digital apparatus does not exceed the Class B limits for radio noise emissions from digital apparatus as set out in the interference-causing equipment standard entitled "Digital Apparatus", ICES-003 of the Industry and Science Canada.

Cet appareil numérique respecte les limites de bruits radioélectriques applicables aux appareils numériques de Classe B prescrites dans la norme sur le matériel brouilleur: "Appareils Numériques", ICES-003 édictée par l'Industrie et Sciences Canada.

Declaration of Conformity (European Countries)
Approvals and Certifications

The CE marking applied to this product symbolises Samsung Electronics Co., Ltd. Declaration of Conformity with the following applicable 93/68/EEC Directives of the European Union as of the dates indicated:

January 1, 1995: Council Directive 73/23/EEC Approximation of the laws of the member states related to low voltage equipment.

January 1, 1996: Council Directive 89/336/EEC (92/31/EEC), approximation of the laws of the Member States related to electromagnetic compatibility.

March 9, 1999: Council Directive 1999/5/EC on radio equipment and telecommunications terminal equipment and the mutual recognition of their conformity.

A full declaration, defining the relevant Directives and referenced standards can be obtained from your Samsung Electronics Co., Ltd. representative.

EC Certification

Certification to 1999/5/EC Radio Equipment & Telecommunications Terminal Equipment Directive (FAX)

This Samsung product has been self-certified by Samsung for pan-European single terminal connection to the analogue public switched telephone network (PSTN) in accordance with Directive 1999/5/EC. The product has been designed to work with the national PSTNs and compatible PBXs of the European countries:

In the event of problems, you should contact the Euro QA Lab of Samsung Electronics Co., Ltd. in the first instance.

The product has been tested against TBR21 and TBR 38. To assist in the use and application of terminal equipment which complies with this standard, the European Telecommunication Standards Institute (ETSI) has issued an advisory document (EG 201 121) which contains notes and additional requirements to ensure network compatibility of TBR21 terminals. The product has been designed against, and is fully compliant with, all of the relevant advisory notes contained in this document.

chapter 1

Introduction

Congratulations on your purchase of a Samsung ML-1250 printer! This chapter provides information on the following topics:

- ♦ Special Features
- ♦ Printer Components

Special Features

Samsung ML-1250 is a versatile, productive printer equipped with special features that will improve print quality, giving you a competitive edge. You can:

Print with excellent quality and high speed

- You can print at **1200 dpi class**. See page 5.12.
- Your printer prints **12 pages-per-minute**.
- The **PCL 6** printer language enables fast printing performance.

Flexible paper handling

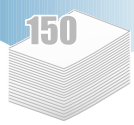

- Standard **150-sheet automatic feeder** and a **1-sheet manual feeder** supports various sizes and types of paper.
- Two output locations: Select either **the face-down output tray** or **the face-up output slot** for the most convenient access.

Save your time and money

- If you select **Toner Save** mode, your printer will use less toner. See page 5.6.
- Print multiple pages on a single sheet of paper to save paper (**N-up printing**). See page 5.7.
- One-touch **last page printing** is available in the Ready mode. See page 5.21.
- The printer **conserves electricity** by automatically reducing power consumption when it is not active.
- This product meets **Energy Star** guidelines for energy efficiency.

Create professional documents

- You can customize your documents by using **Watermarks** such as "Confidential." See page 5.14.
- Preprinted forms and letterheads can be printed on plain paper. See page 5.17.
- Print **Posters**. The text and pictures of each page of your document are magnified and printed across the selected sheet of paper. After the document has printed, trim off the white edges of each sheet. Tape the sheets together to form a poster. See page 5.9.

Expand the printer capacity

The ML-1250 is shipped with 4 MB of memory included. You can expand the memory capacity of your printer (up to 68 MB maximum) by installing optional memory modules. See page A.30.

Print in various environments

- You can print in **Windows 95/98/NT4.0/2000**.
- Your printer is compatible with **Linux, DOS**, and **Macintosh**.
- The ML-1250 printer comes with both **Parallel** and **USB** interfaces.

Printer Components

1

Front View

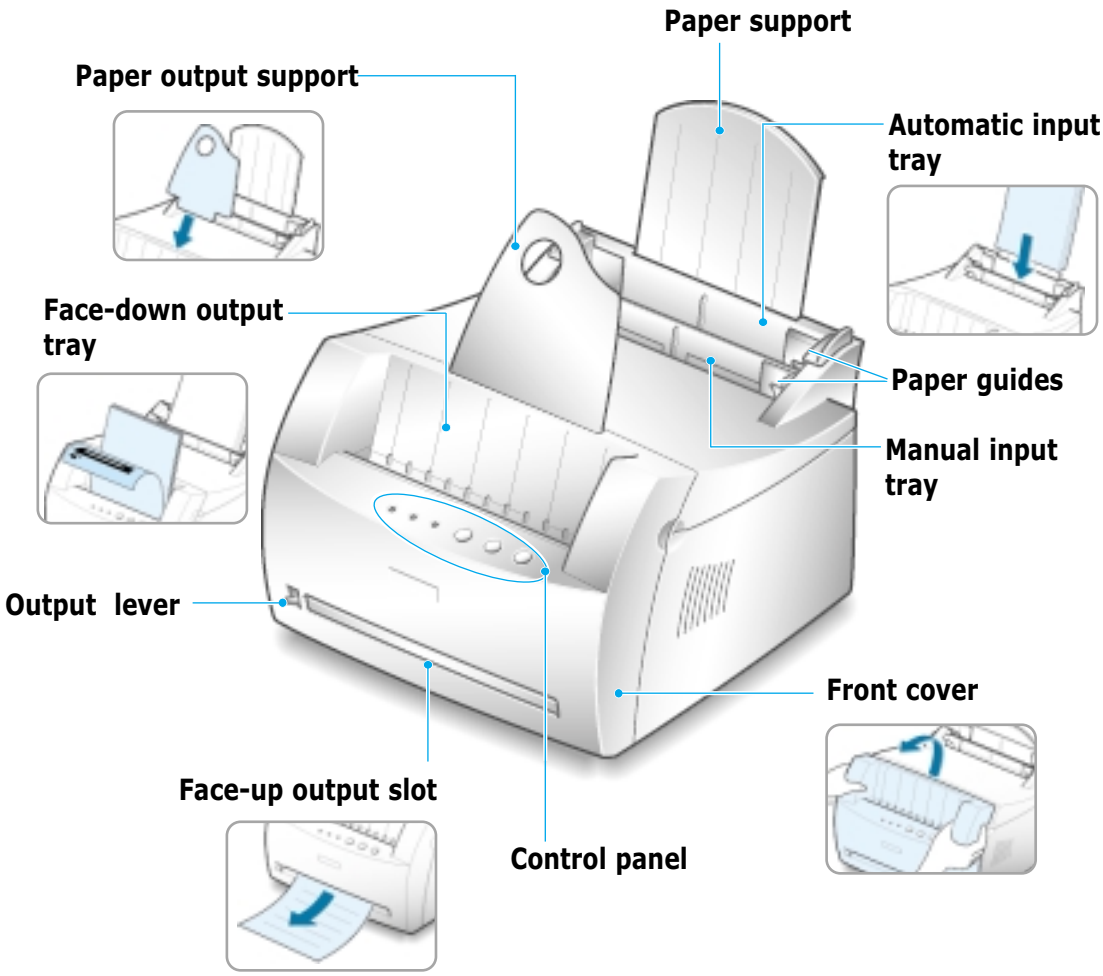

Inside View

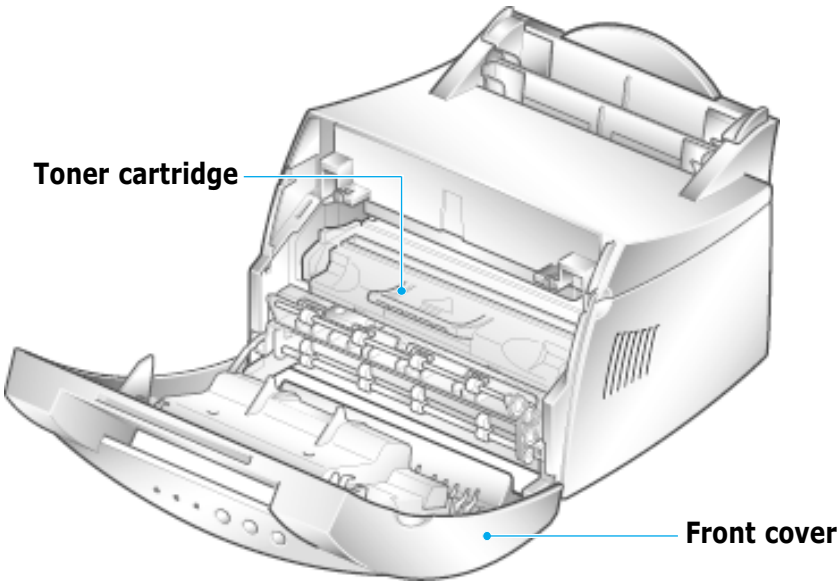

Rear View

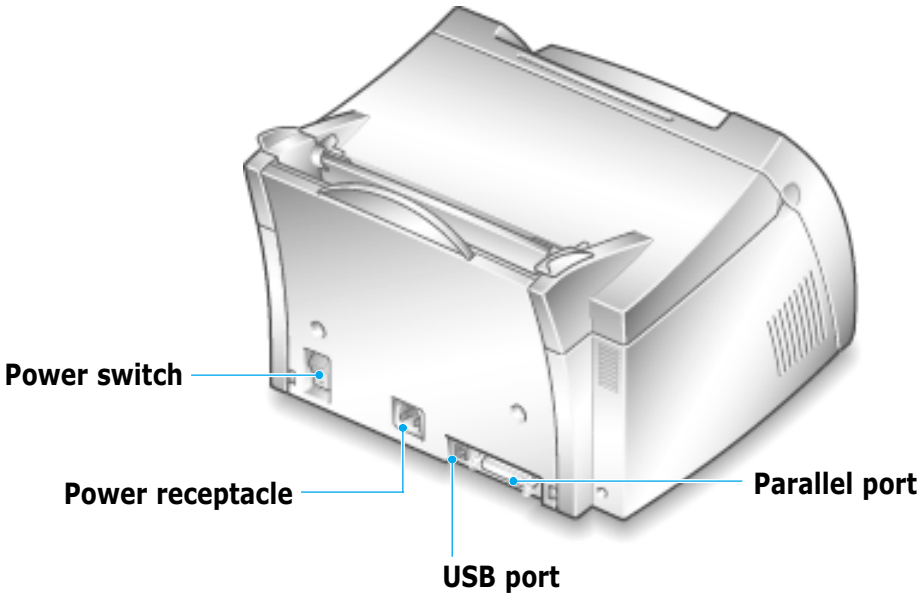

chapter 2

Setting Up Your Printer

This chapter provides step by step information on setting up your printer. Topics included in this chapter are:

- ***STEP 1***: Unpack Your Printer
- ***STEP 2***: Install the Toner Cartridge
- ***STEP 3***: Load Paper
- ***STEP 4***: Connect to the Computer with a Parallel Cable
- ***STEP 5***: Turn on the Printer
- ***STEP 6***: Print a Demo Page!
- ***STEP 7***: Install the Printer Software
- Installing Software from Diskette

STEP 1 Unpack Your Printer

1 Remove the printer and all accessories from the packing carton. Make sure that your printer has been packed with the following items:

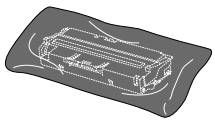

Toner cartridge

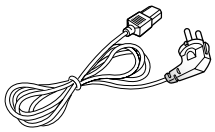

Power cord

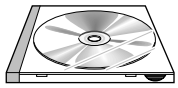

CD-ROM*

Paper Output Support

Setup Guide

Notes:

- If any items are missing or damaged, notify your dealer immediately.
- **Components may differ from one country to another.**

* contains the printer driver, the User's Guide, the Adobe Acrobat Reader program, and the Make Your Own Diskette setup software.

2 Carefully remove all packing tapes from the printer.

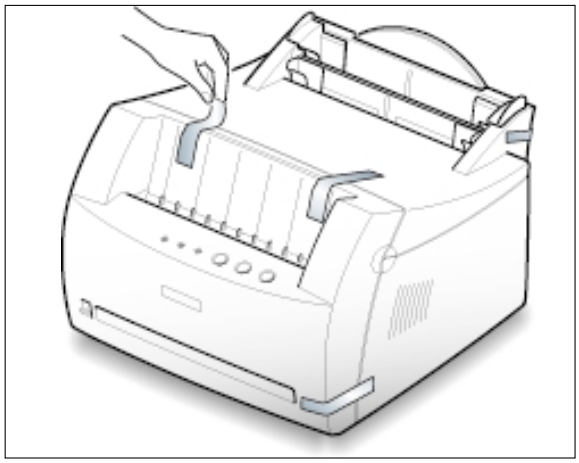

3 Attach the supplied paper output support as shown.

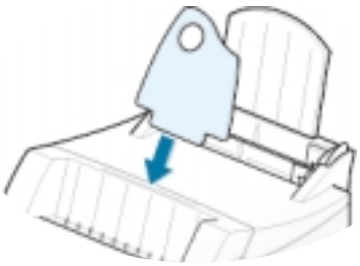

STEP 2

Install the Toner Cartridge

1 Grasp both sides of the front cover and open it by pulling it towards you.

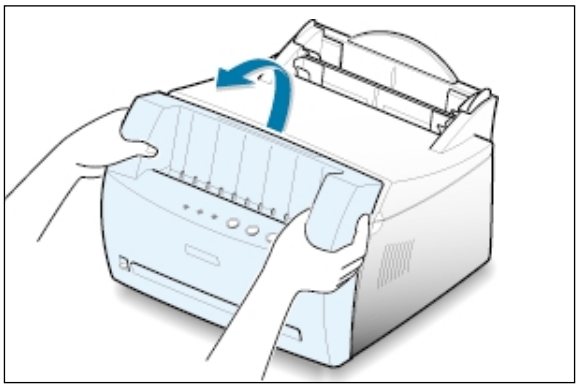

2 Remove the toner cartridge from its bag and then remove the paper covering it. Discard the paper.

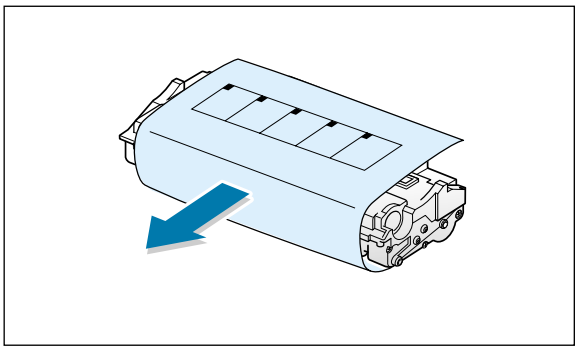

3 Gently shake the cartridge from side to side to evenly distribute the toner inside the cartridge.

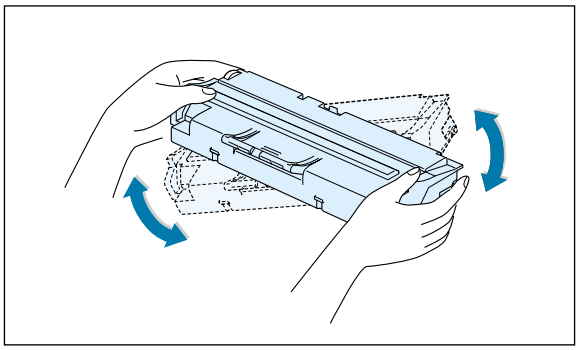

CAUTION:
To prevent damage, do not expose the toner cartridge to light for more than a few minutes. Cover it with a piece of paper, if left exposed for more than a few minutes.

If toner gets on your clothing, wipe it off with a dry cloth and wash clothing in cold water. **Hot water sets toner into fabric.**

4 Locate the cartridge slots inside the printer, one on each side.

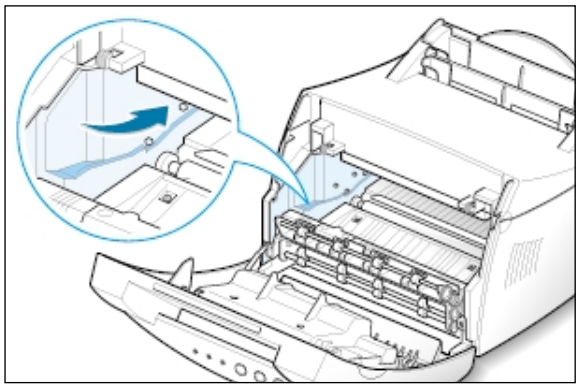

5 Grasp the handle and insert the cartridge in the printer until it snaps into place.

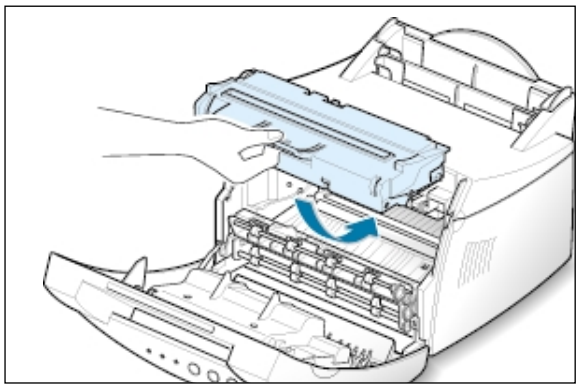

6 Close the front cover. Make sure that the cover is securely closed.

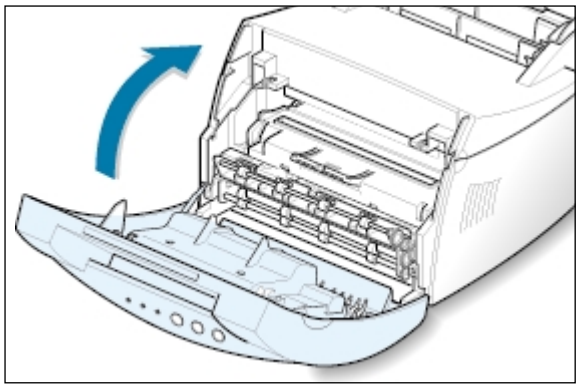

Note: When printing text at 5% coverage, you can expect a toner cartridge life of approximately 2,500 pages (1,000 pages for the toner cartridge that is shipped with the printer).

STEP 3 Load Paper

1 Pull the paper support on the automatic input tray up, until it stops.

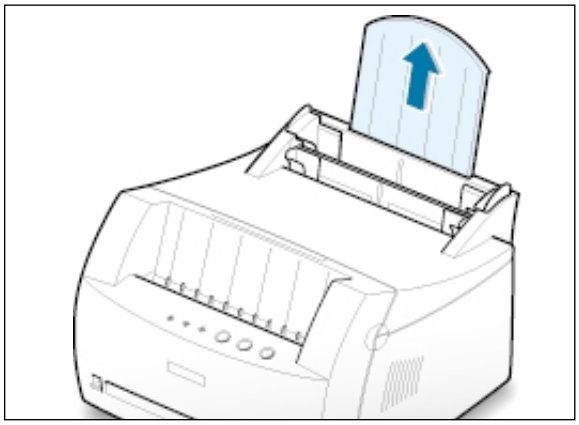

2 Before loading the paper, flex the sheets back and forth to loosen them, and then fan them.

Tap the edges of the stack on a table top to straighten them and prevent paper jams.

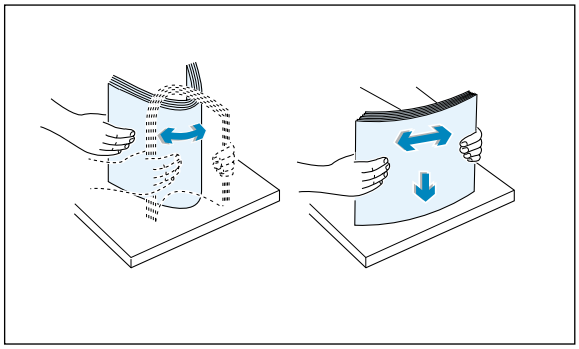

3 Load a stack of paper into the automatic input tray **with the print side facing up**.

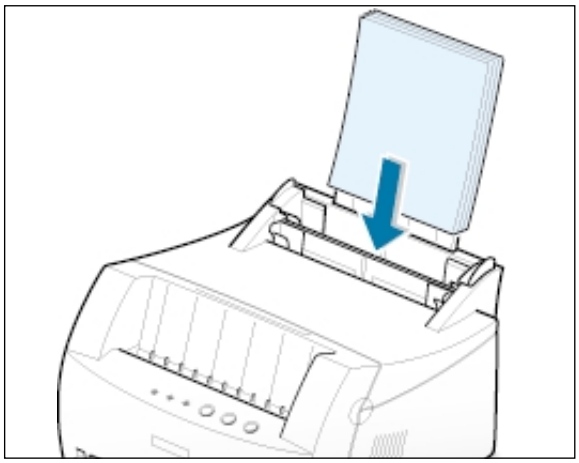

4 Do not load too much. This tray holds up to 150 sheets.

Keep the paper below this height mark.

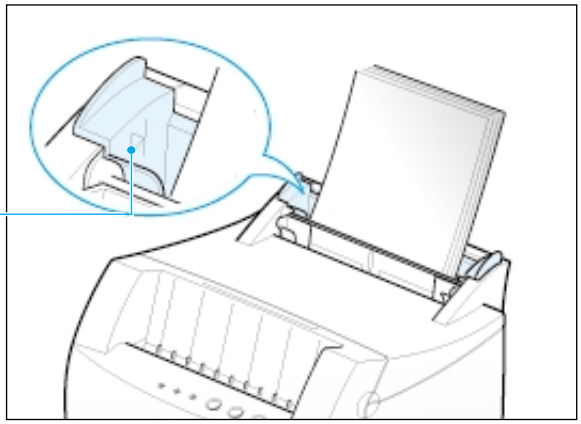

5 Adjust the paper guides to the width of the paper stack.

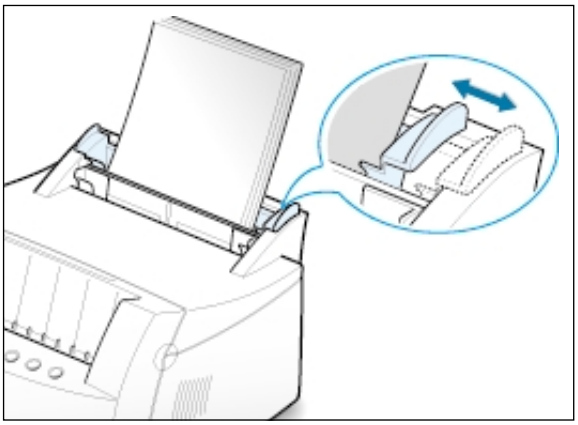

Notes:

- Do not push the width guide far enough to cause the media to warp.
- If you do not adjust the width guide, it may cause paper jam.
- If you are needed to add more sheets of paper while printing, remove the remaining paper from the tray at first. Then, reinsert them with the new paper. Note that adding new paper into the remains in the tray may cause paper jams or multiple feeding.

STEP 4 Connect to the Computer with a Parallel Cable

Note: To connect the printer to the parallel port of the computer requires a certified parallel cable.
You will need to buy the IEEE1284 compliant cable.

1 Make sure that both the printer and the computer are turned off.

2 Plug the parallel printer cable into the connector on the back of the printer.

Push the metal clips down to fit inside the notches on the cable plug.

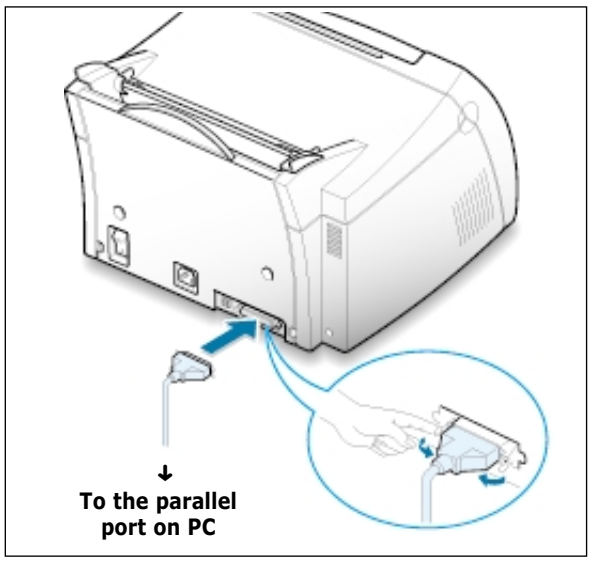

3 Connect the other end of the cable to the parallel interface port on your computer, and tighten the screws.

See your computer documentation if you need help.

If you are using a USB interface

Go to "Using Your Printer with a USB Cable" on page A.10.

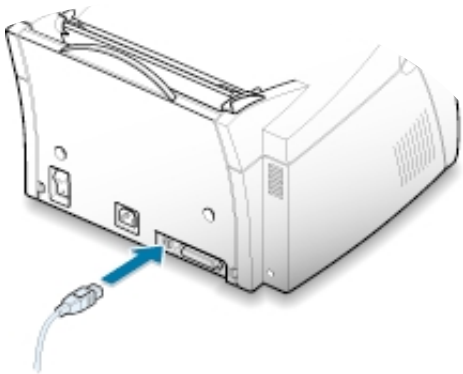

STEP 5

Turn on the Printer

1 Plug the power cord into the power receptacle on the back of the printer.

2 Plug the other end into a properly grounded AC outlet.

3 Turn on the power.

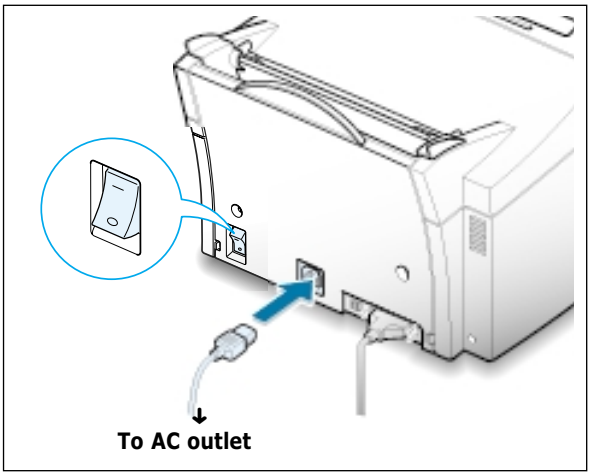

STEP 6

Print a Demo Page!

As the printer powers up, all the printer control panel lights turn on briefly. When only the **Data** light remains on, press and hold the **Demo** button.

Hold down the button for about 2 seconds until all lights blink slowly. Then release the button and the demo page will print.

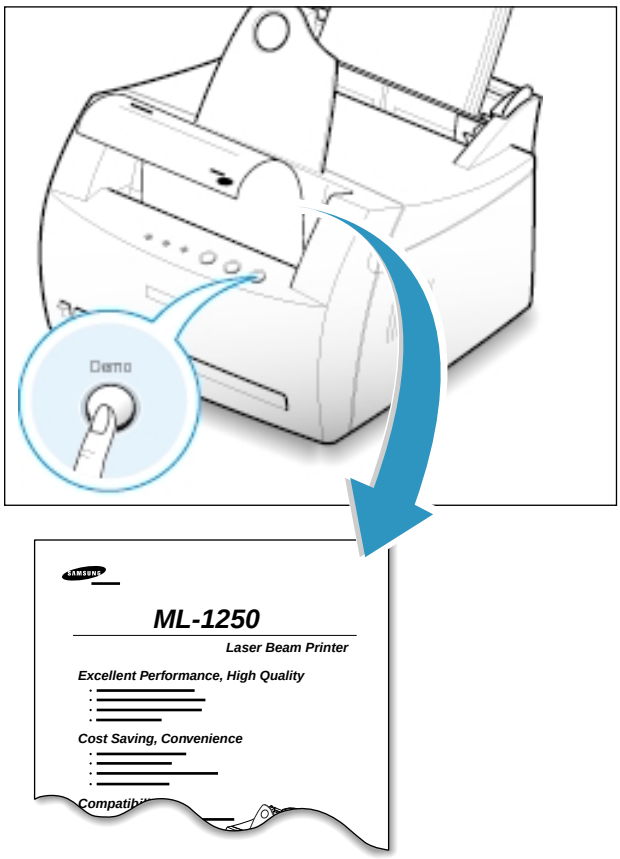

The demo page provides a sample of print quality to help you verify that the printer is printing correctly.

STEP 7

Install the Printer Software

Included with your printer is a CD-ROM containing the printer driver for some of the most popular Windows software applications. To operate your printer, you must install a printer driver, which translates data from your application into data that the printer understands.

If you are printing with a parallel interface

Go to page 2.9 for information on installing the print software on a computer that is attached directly to the printer with a parallel cable.

If you are printing with a USB interface

Go to "Using Your Printer with a USB Cable" on page A.10, for information on installing the print software on a USB-enabled computer.

If you are printing from Macintosh

Go to "Using Your Printer with a Macintosh" on page A.16, for information on installing the print software and printing from Macintosh.

If you are printing in DOS

Go to "Printing from DOS Application" on page A.23, for information on installing the DOS RCP utility and printing from DOS applications.

If you are printing in Linux

Go to "Linux Driver Installation" on page A.28, for information on installing the Linux driver.

Before Installing the Printer Software

Verify the following:

- At least **16 MB or more of RAM** is installed on your PC.
- There is at least **50 MB of free disk space** on your PC.
- **All applications are closed on your PC before beginning installation**.
- Windows 95, Windows 98, Windows Me, Windows NT 4.0 or Windows 2000.

Installing the Printer Software from the CD-ROM

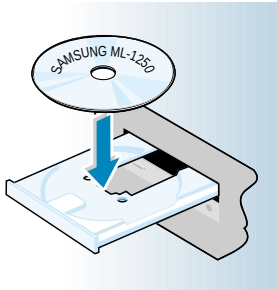

1 Place the CD-ROM in the CD-ROM drive. Install will start automatically.

If the CD-ROM drive does not automatically run:

Select **Run** from the **Start** menu, and type **x:\cdsetup.exe** in the Open box (where **x** is the drive letter for the CD-ROM drive), and then click **OK**.

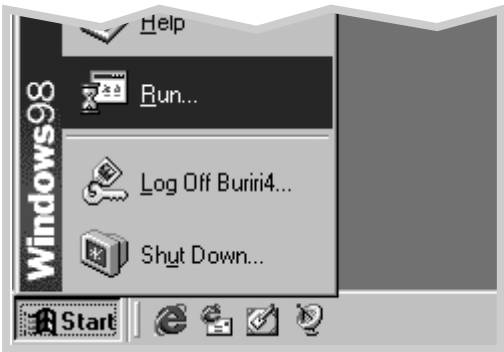

Note: If the New Hardware Found box appears during the installation procedure, click the [X] in the upper right corner of the box, or click **Cancel**.

2 When the opening screen appears, select the appropriate language.

3 Click **Install the Samsung Software on your PC**.

4 The Welcome window opens. Click **Next**.

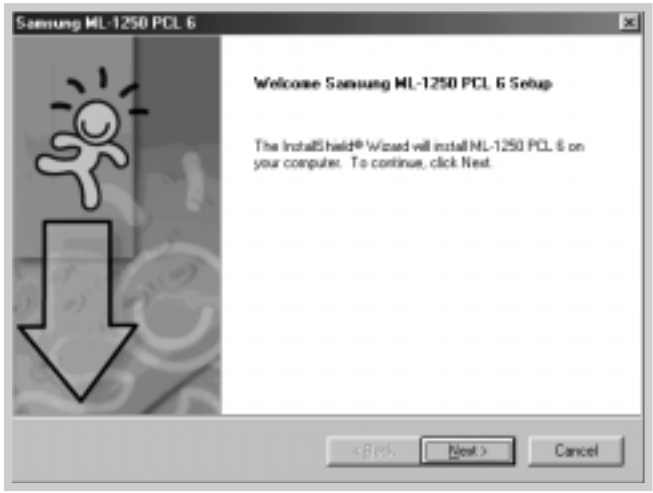

5 The files are copied into the appropriate directory.

6 Click **Finish**.

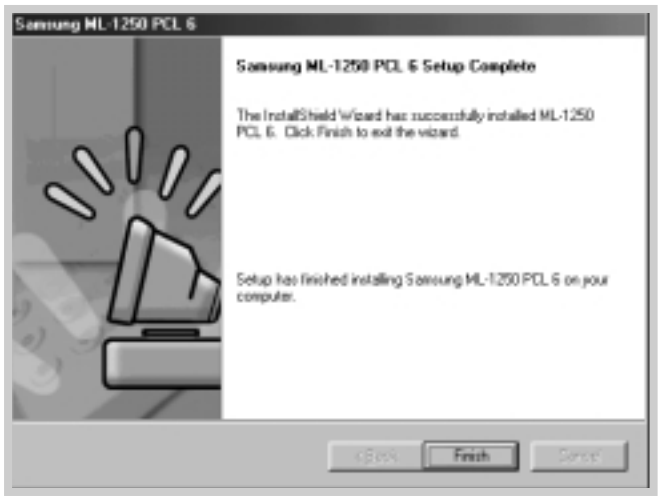

Software Installation Tips

I do not have a CD-ROM drive

If you have access to another computer with a CD-ROM drive, you can use tne Make Diskette utility in Windows to create the disks you need for the installation. Go to "Installing Software from Diskette" on page 2.13.

How do I access printer features ?

Some printer features, such as paper size and page orientation, may be available through your application settings. Use application settings, if available, because they override printer driver settings.

Access advanced printer features through your printer driver. See chapter 5, "Printing Tasks" for instructions on using your printer driver features.

How do I remove the printing software ?

In Windows, after installation, the Uninstall icon in the Samsung ML-1250 program group allows you to select and remove any or all of the Samsung ML-1250 printing system components. If you are upgrading the printer driver, or if your installation fails, uninstall the driver following these instructions.

1 From the **Start** menu, select **Programs**.

2 Select **Samsung ML-1250 PCL 6**, and then **Samsung ML-1250 PCL 6 Driver Maintenance**.

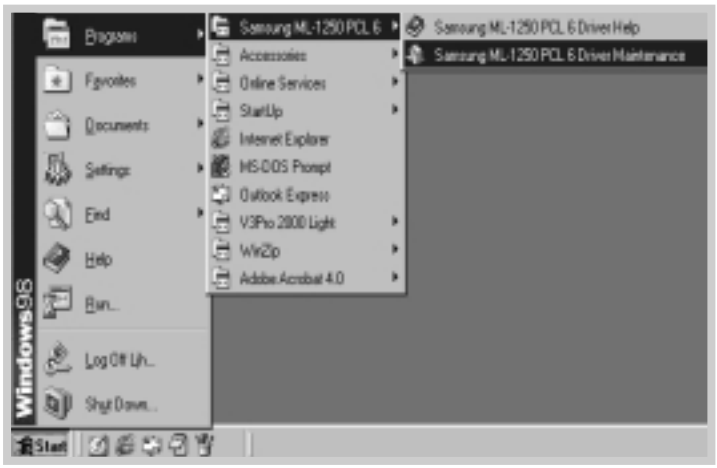

3 When your computer confirms your selection, click **OK**.

4 The Samsung ML-1250 printer driver and all of its components are removed from your computer.

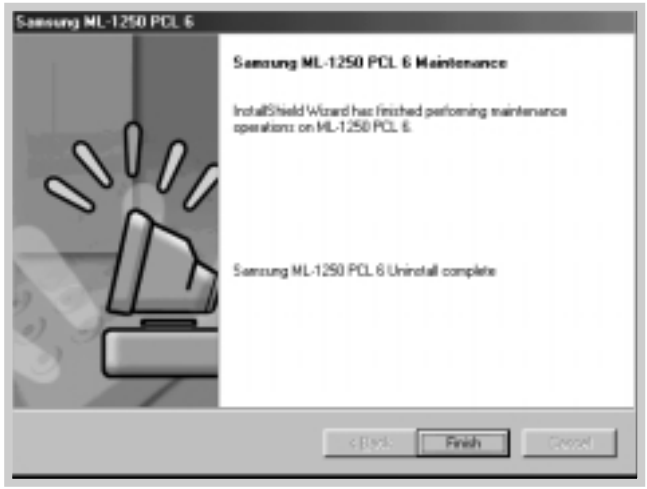

5 Click **Finish**.

If you have problems installing

- Exit your software programs. Then turn off the computer and the printer. Turn on the printer, and then turn on the computer.
- Close any virus protection programs that are running on your computer.
- Uninstall the printer software using the instructions above, and then repeat the installation procedure.

Installing Software from Diskette

If you do not have a CD-ROM drive and if you have access to another computer with a CD-ROM drive, you can copy software installation files from your printer software CD-ROM onto floppy diskettes, and then use the diskettes instead of the CD-ROM to install the software.

Making Installation Diskettes

You can make installation diskettes for the Samsung ML-1250 PCL 6 printer driver. Make sure that you have several formatted diskettes ready, and then follow these steps:

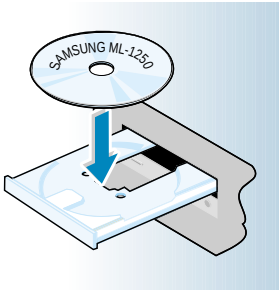

1 Insert the CD-ROM shipped with your printer into the CD-ROM drive. Installation will start automatically.

If the CD-ROM drive does not automatically run:

Select **Run** from the **Start** menu, and type **x:\cdsetup.exe** in the Open box (where **x** is the drive letter for the CD-ROM drive), and then click **OK**.

2 When the opening screen appears, select the appropriate language.

3 Click **Make your own Diskette set of software**.

4 The Copy to Floppy dialog box appears.

Select the desired components you want to copy to the diskette from the Select box. You can select PCL 6 Driver, USB Driver and DOS RCP.

Select the floppy disk drive that you will be inserting the diskette into.

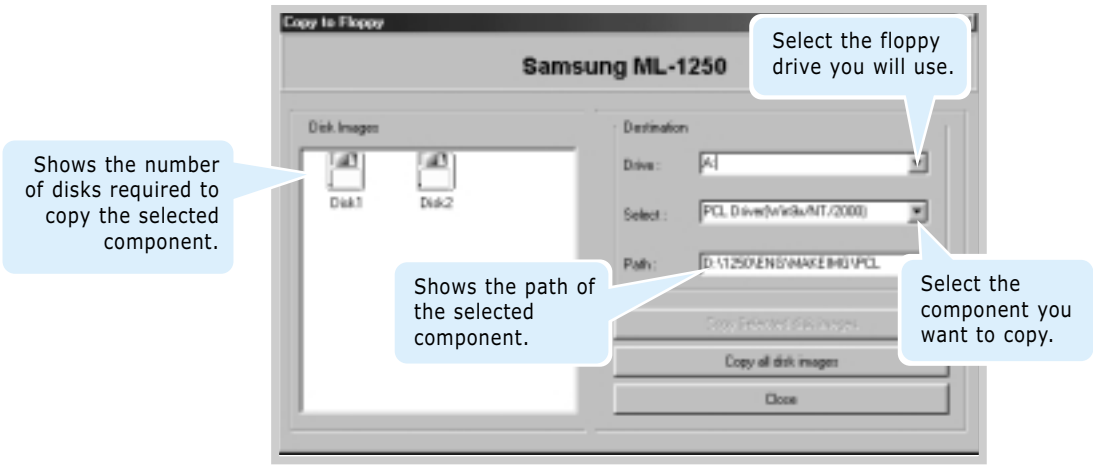

5 Click **Copy all disk images**.

If you want to copy a portion of the selected component, select the disk you want to copy in the Disk Images window, and then click **Copy selected disk images**.

6 When prompted, insert a blank, formatted diskette into the floppy drive, and click **Yes** to copy the first diskette. For multiple diskettes, when the first diskette is finished, you are prompted to insert disk 2.

Make sure you label each diskette in order as you create it: ML-1250 PCL 6 driver, disk 1 of 2, etc.

7 If you have more than one disk, insert the next disk and click **Yes**.

8 When copying to diskettes has been completed, click **Close** in the Copy to Floppy dialog box. Then click **Exit** in the SAMSUNG PRINTER SETUP dialog box.

Installing Software

To install the printer driver from the diskettes, follow this procedure:

1 Insert the first diskette (if you have more than one software diskette).

2 From the **Start** menu, select **Run**.

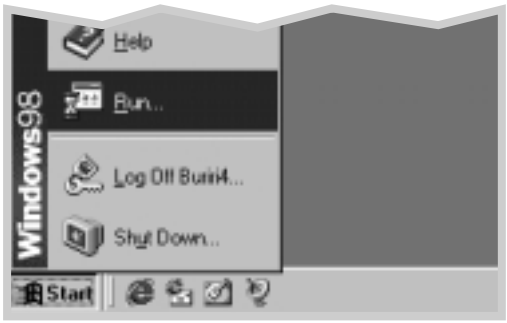

3 Type **A:\setup.exe** in the Open box and click **OK**. (if your floppy drive is not **A**, substitute the correct letter.)

4 Follow the on-screen instructions to complete the installation.

chapter 3

Using Control Panel

This chapter describes how to use the printer's control panel. It provides information on the following topics:

- Control Panel Buttons
- Control Panel Lights

Control Panel Buttons

The printer has three buttons: **Toner Save**, **Cancel/Reprint** and **Demo**.

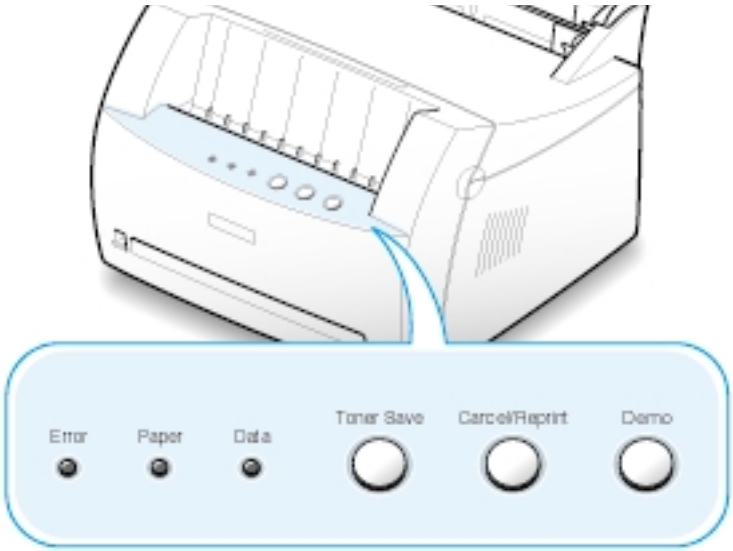

Demo

Print demo page

Press and hold **Demo** for about 2 seconds until the control panel lights blink slowly to print a demo page. The printer must be in the Ready mode.

Start manual feeding

When you select **Manual Feeder** for **Paper Source** from your software application, you should press **Demo** each time you load a sheet of paper manually. For further information, see "Using the Manual Input Tray" on page 4.5.

Clean the inside of the printer

Press and hold **Demo** for about 10 seconds until the control panel lights remain lit. After cleaning the printer, one cleaning sheet prints. For further information, see page 6.5.

Cancel/Reprint

Cancel job

Press **Cancel/Reprint** and hold until the control panel lights blink to cancel a job the printer is currently printing. The **Error** light will blink while the print job is cleared from both the printer and the computer, and then the printer will return to the Ready mode. This may take some time, depending on the size of the print job.

Note: If the **Cancel/Reprint** button is accidentally pushed, the job must be reprinted. There is no undo function.

Reprint last page of the job

If you press **Cancel/Reprint** in the Ready mode, the printer prints the last page of the last print job. See page 5.21.

Toner Save

(on)

Toner Save

(off)

Turn the Toner Save Mode on/off

Press **Toner Save** to turn the Toner save mode on or off. The printer must be in the Ready mode.

- If the button backlight is on, toner save mode activates and the printer uses less toner to print a document.
- If the button backlight is off, toner save mode is disabled and you will print in normal quality.

To enable or disable the Toner Save mode using this button, the **Toner Save Mode** option in the printer driver must be set to **Printer Setting**.

For further information on the Toner Save mode, see page 5.6.

Control Panel Lights

The control panel lights indicate the status of your printer. If the **Error** light is on, the printer is experiencing an error. See "Troubleshooting Error Messages" on page 7.17.

Control Panel Light Message

Error Paper Data

Ready mode

The **Data** light is on and the printer is ready to print.

No action is needed. If you press and hold the **Demo** button for about 2 seconds, a demo page will print.

Error Paper Data

Processing

The printer is receiving or processing data. Wait for the job to print.

Pressing the **Cancel/Reprint** button cancels the current job. One or two pages may print as the printer clears the print job. The printer will return to the Ready mode after the job has been canceled.

Error Paper Data

Paper out

The printer is out of paper.

Load paper into the printer. For the automatic tray, there is no need to press any button to reset. For the manual tray, press the **Demo** button after loading.

Error Paper Data

Waiting for the Demo button to be pressed

In the Manual Feed mode, the printer is waiting for the **Demo** button to be pressed.
Press the **Demo** button to start printing. You must press the button to print each page after loading paper into the manual input tray.

chapter 4

Print Media

This chapter will help you to understand what kind of paper you can use with the Samsung ML-1250 printer and how to properly load paper in the different paper input trays for the best print quality.

Topics included in this chapter are:

- Choosing Paper and Other Media
- Selecting the Output Location
- Loading Paper
- Printing on Envelopes
- Printing on Heavy Paper
- Printing on Labels
- Printing on Transparencies
- Printing on Preprinted Paper
- Printing on Card Stock or Custom-sized Media

Choosing Paper and Other Media

You can print on a variety of print media, such as plain paper, envelopes, labels, transparencies, card stocks and so on. See "Paper Specification" on page A.2. To get the best possible print quality, use only high-quality copier-grade paper.

When you choose print media, consider the following:

- **Desired outcome**: The paper you choose should be appropriate for the project.
- **Size**: You can use any size paper that fits easily within the paper adjusters of the paper tray.
- **Weight** : Your printer supports paper weight as follows:
  - 16~24 lbs bond for the automatic input tray
  - 16~43 lbs bond for the manual input tray
- **Brightness**: Some papers are whiter than others and produce sharper, more vibrant images.
- **Surface smoothness**: The smoothness of the paper affects how crisp the printing looks on the paper.

Always test a sample of paper before purchasing large quantities.

CAUTION: Using media that does not conform to the specification listed in the paper specification can cause problems that may require service. This service is not covered by the warranty or service agreements.

Media Sizes and Capacities

Media Size	Input Source/Capacity*	
	Automatic Input Tray	Manual Input Tray
Plain Paper		
Letter (8.5 x 11 in.)	150	1
Legal (8.5 x 14 in.)	150	1
Executive (7.25 x 10.5 in.)	150	1
A4 (210 x 297 mm)	150	1
A5 (148 x 210 mm)	150	1
Folio (8.5 x 13 in.)	150	1
B5 (182 x 257 mm)	–	1
Envelopes		
No. 10 (4.12 x 9.5 in.)	5	1
DL (110 x 220 mm)	5	1
C5 (162 x 229 mm)	5	1
C6 (114 x 162 mm)	5	1
B5 (176 x 250 mm)	5	1
Monarch (3.87 x 7.5 in.)	5	1
Labels		
Letter (8.5 x 11 in.)	5	1
A4 (210 x 297 mm)	5	1
Transparency film		
Letter (8.5 x 11 in.)	5	1
A4 (210 x 297 mm)	5	1
Card stock	5	1
Bond Paper	5	1
Thin Paper (12 lb ~ 16 lb)	150	1
Thick Paper (24 lb ~ 43 lb)	5	1

* Depending on paper thickness, maximum capacity may be reduced.

Paper Guidelines

When selecting or loading paper, envelopes, or other special media, keep these guidelines in your mind:

- Attempting to print on damp, curled, wrinkled, or torn paper can **cause paper jams** and poor print quality.
- **Use** cut-sheet paper **only**. You cannot use multi-part paper.
- **Use only** high-quality, copier grade paper.
- **Do not** use paper that has been already printed on or that has been fed through a photocopier.
- **Do not** use paper with irregularities, such as tabs or staples.
- **Do not** attempt to load any tray during printing and never overfill the tray. This could cause a paper jam.
- **Avoid** paper with embossed lettering, perforations, or texture that is too smooth or too rough.
- Colored paper should be of the same high quality as white photocopy paper. The pigments must withstand the printer's fusing temperature of 400°F (205°C) for 0.1 second without deterioration. **Do not** use paper with a colored coating that was added after the paper was produced.
- Preprinted forms must be printed with nonflammable, heat-resistant inks that do not melt, vaporize, or release hazardous emissions when subjected to the printer's approximately 400°F (205°C) fusing temperature for 0.1 second.
- Store paper in its ream wrapper until ready to use. Place cartons on pallets or shelves, not on the floor.
- **Do not** place heavy objects on top of the paper, whether it is packaged or unpackaged.
- **Keep** paper away from moisture, direct sunlight or other conditions that can cause it to wrinkle or curl.

Selecting the Output Location

The printer has two output locations: the **face-up output slot** and the **face-down output tray**. You can select the output location by changing the position of the output lever on the front of the printer. To use the face-down output tray, be sure the output lever is in upper (normal) position. To use the face-up output slot, push it down to open the slot.

- If paper coming out of the face-down output tray has problems, such as excessive curl, **try printing to the face-up output slot**.
- To avoid paper jams, **do not change the position of the output lever** while the printer is printing.

Printing to the Face-Down Output Tray

The face-down output tray collects paper **face-down**, **in correct order**. Make sure that the output lever is in the upper position. (If not, push it up)

The face-down output tray should be used for most print jobs and is recommended for printing over 100 sheets of paper, continuously.

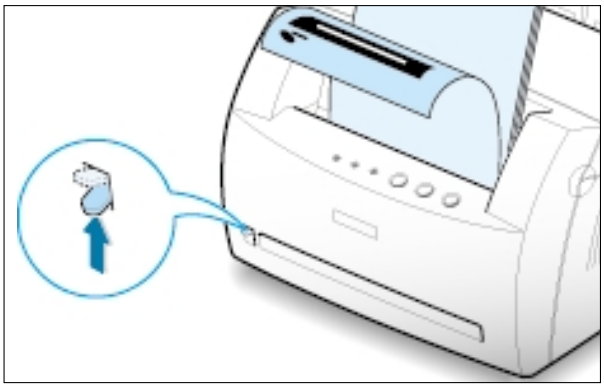

Printing to the Face-Up Output Slot

The printer prints to the face-up output slot if it is open. Push the output lever down to open the slot. Paper comes out of the printer **face-up**.

Using the face-up output slot might improve output quality with the following:

- envelopes
- labels
- paper heavier than 24 lb (90 g/m^2)

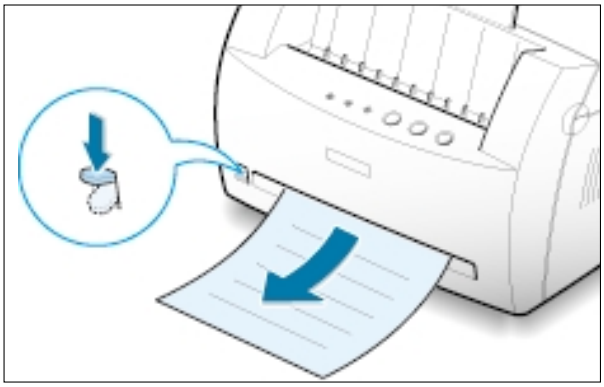

Loading Paper

Proper paper loading helps to prevent paper jams and ensure trouble-free printing. **Do not** remove paper from the tray(s) while a job is printing. Doing so may cause a paper jam.

Using the Automatic Input Tray

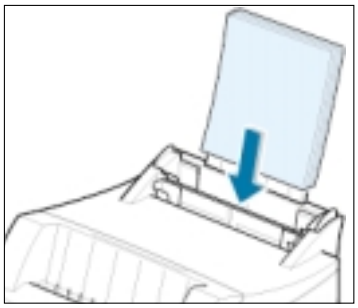

The automatic input tray holds 150 sheets of plain paper and 5 sheets of special media. See "Media Sizes and Capacities" on page 4.2 for acceptable paper size and capacities for each input tray.

Load a stack of paper into the automatic input tray and print. For details on loading paper in the automatic input tray, see "Load Paper" on page 2.4.

Note: Before using the automatic input tray, you must remove paper from the manual input tray.

Using the Manual Input Tray

When you change the print settings, if you select **Manual Feeder** in the **Paper Source** option, you can manually load paper in the manual input tray. Manually loading paper can be helpful when you want to check the print quality after each page is printed.

If you experience a paper jam from the automatic input tray, load one sheet of paper at a time into the manual input tray.

Note: To avoid a paper jam, use the manual tray with the automatic input tray loaded with paper.

1 Load the print media in the manual input tray **with the print side up**.

Adjust the paper guide against the stack of print media without bending.

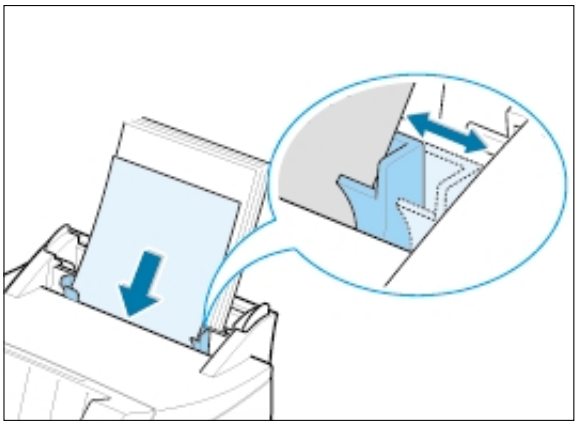

2 Push the output lever down to open the face-up output slot.

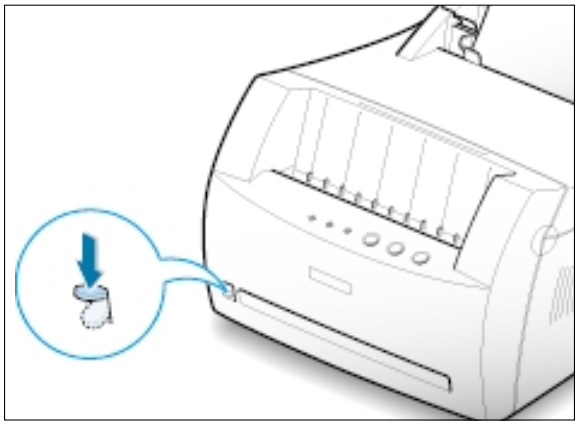

3 When you print a document, you must select **Manual Feeder** for **Paper Source** from the software application, and then select the correct paper size and type. For details, see page 5.3.

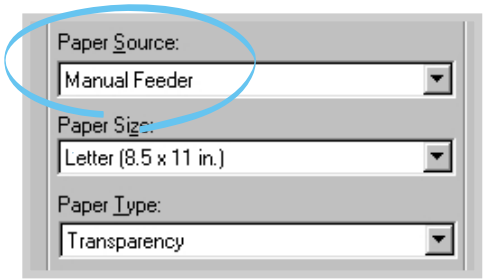

4 Print the document.

5 If you are printing multiple pages, load the next sheet after the first page prints out.

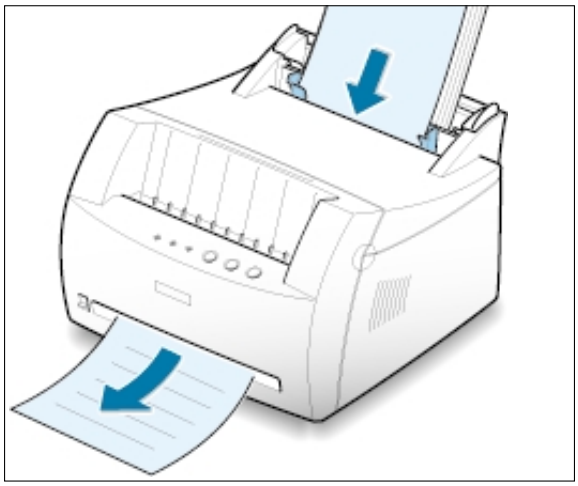

6 Press **Demo** to start feeding.

Notes:

- The face-up output slot may not hold the printed pages properly.
- The printed pages will not stack in the face-down output tray unless you change output lever position. After you finish using the face-up output slot, you must change the position of the output lever to the normal position. Push it up.

Printing on Envelopes

Guidelines

- Only use envelopes recommended for laser printers. Before you load envelopes in the input tray, make sure that they are undamaged and that they are not stuck together.
- Do not feed stamped envelopes.
- Never use envelopes with clasps, snaps, windows, coated lining, or self-stick adhesives. These envelopes may severely damage the printer.

1 Flex or fan the envelopes to prepare them for loading.

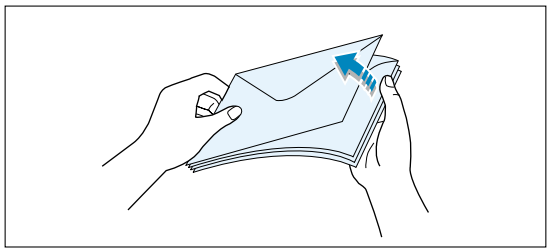

2 Load the envelopes into the input tray you want to use **with the flap side down**.

The stamp area is **on the right side** and the end of the envelope **with the stamp area enters the tray first**.

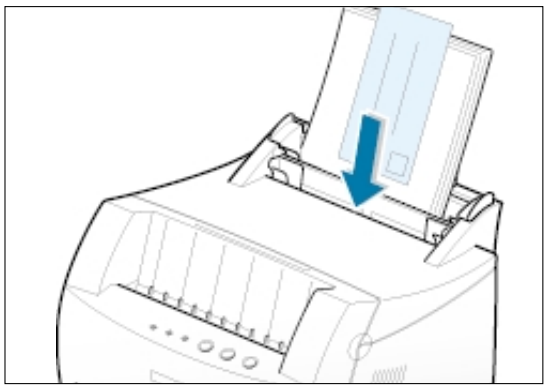

3 Adjust the guide to the edge of the envelope stack.

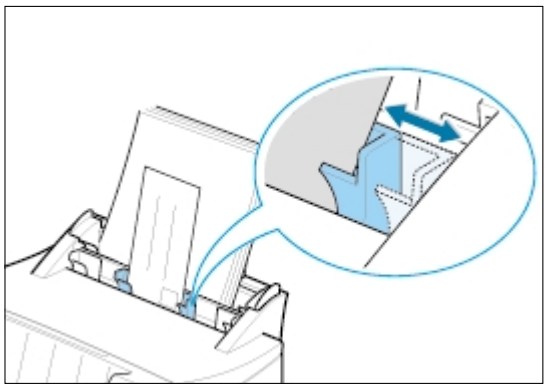

4 Push the output lever down.

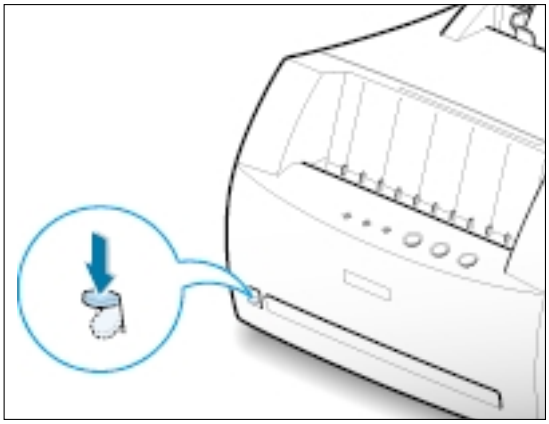

5 When you print on envelopes, configure the paper source, type and size properly in the software application. For details, see page 5.3.

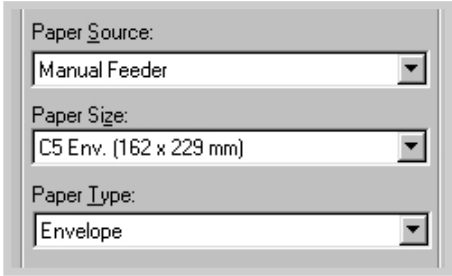

6 Print the document.

7 After printing, push the output lever up.

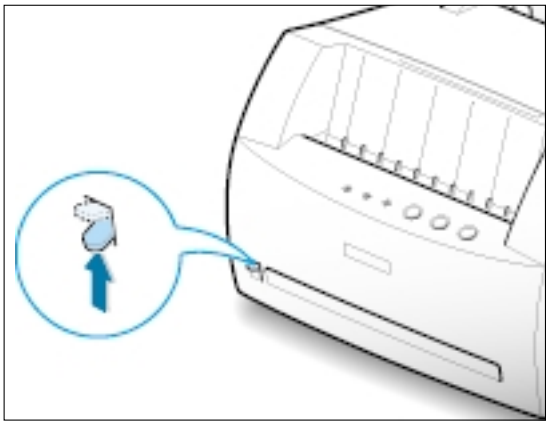

Printing on Heavy Paper

Guidelines

- Heavy paper is any paper heavier than 24 lb (90 g/m^2). For cotton papers, you can use 24 lb paper. The maximum paper weight available for your printer is 43 lb (163g/m^2).
- Do not use extremely heavy paper stock (greater than 43 lb, or 163 g/m^2 bond). Misfeeds, mis-stacking, media jams, poor toner fusing, poor print quality, and excessive mechanical wear can result.

1 Load paper in the input tray you want to use **with print side up**.

Adjust the guide to fit the width of the labels.

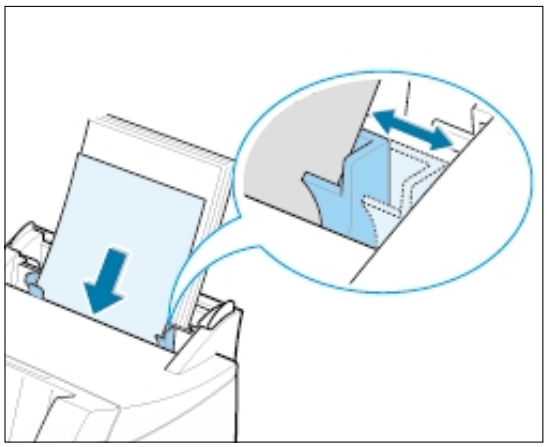

2 Push the output lever down.

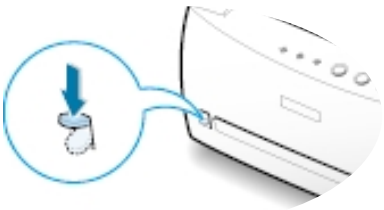

3 When you print on heavy paper, select **Bond** in the Paper Type section, and then configure the paper source, and size in the software application. For details, see page 5.3.

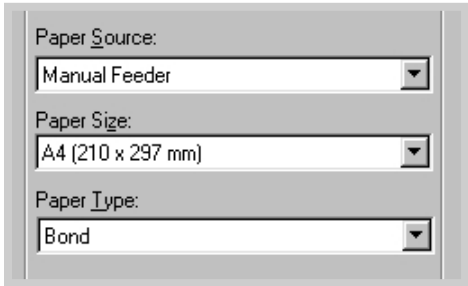

Printing on Labels

Guidelines

- Only use labels recommended for laser printers.
- Verify that the labels' adhesive material can tolerate fusing temperature of 200°C (392°F) for 0.1 second.
- Make sure that there is no exposed adhesive material between the labels. Exposed areas can cause labels to peel off during printing, which can cause paper jams. Exposed adhesive can also cause damage to printer components.
- Do not feed a sheet of labels through the printer more than once. The adhesive backing is designed for one pass through the printer.
- Do not use labels that are separating from the backing sheet or that are wrinkled, bubbled, or otherwise damaged.

1 Load labels in the input tray you want to use **with print side up**.

Adjust the guide to fit the width of the labels.

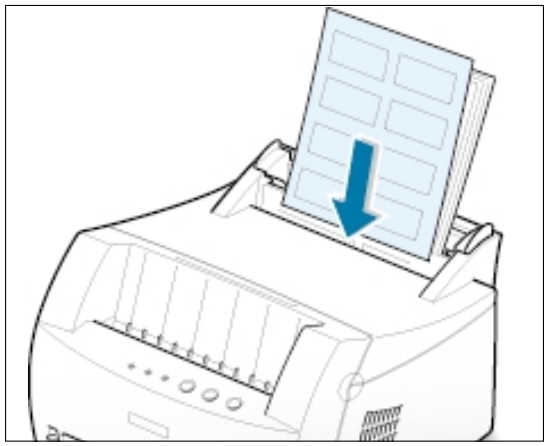

2 Push the output lever down.

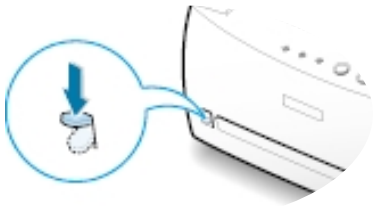

3 When you print on labels, configure the paper source, type and size in the software application. For details, see page 5.3.

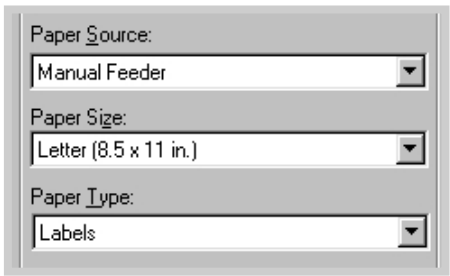

Note: To prevent them from sticking together, do not let the printed label sheets stack up as they are printed out.

Printing on Transparencies

Guidelines

- Only use transparencies recommended for use in laser printers.
- Make sure that the transparencies are not wrinkled or curled, and that they do not have any torn edge.
- Hold the transparencies by the edges and avoid touching the print side. Oils from your fingers that are deposited on the transparency can cause print quality problems.
- Be careful not to scratch the printer side or leave fingerprints on it.

1 Load the transparencies in the desired input tray **with the print side up** and **the adhesive strip entering the printer first.**

Adjust the guide to fit the width of the transparencies.

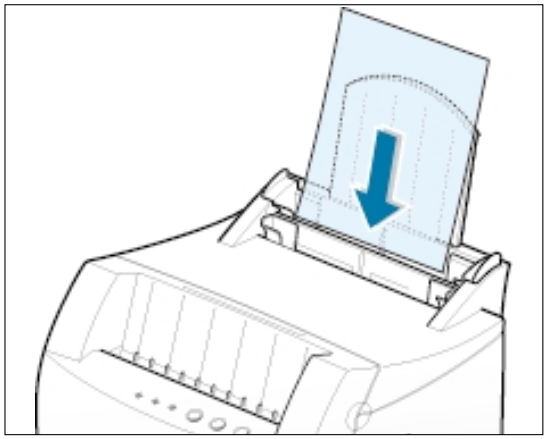

2 Push the output lever down.

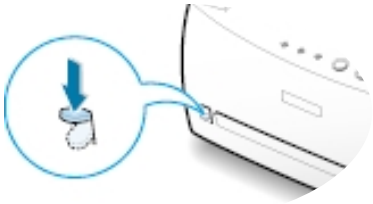

3 When you print on transparencies, configure the paper source, type and size in the software application. For details, see page 5.3.

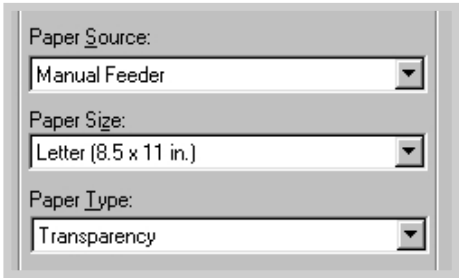

Notes:

- To prevent transparencies from sticking together, do not let the printed sheets stack up as they are printed out.
- Place transparencies on a flat surface after removing them from the printer.

Printing on Preprinted Paper

Preprinted paper is paper that has some type of printing placed on it before it is sent through the printer (paper that has a preprinted logo at the top of the page, for example).

Guidelines

- Letterheads must be printed with heat-resistant ink that will not melt, vaporize, or release hazardous emissions when subjected to the printer's fusing temperature of 400°F (205°C) for 0.1 second.
- Ink on letterhead must be non-flammable and should not adversely affect any printer rollers.
- Forms and letterheads should be sealed in a moisture-proof wrapping to prevent changes during storage.
- Before you load preprinted paper such as forms and letterheads, verify that the ink on the paper is dry. During the fusing process, wet ink can come off preprinted paper.

1 Load letter-heads into the input tray you want to use **with the design face up, and the bottom edge toward the printer**.

Adjust the guide to fit the width of the paper stack.

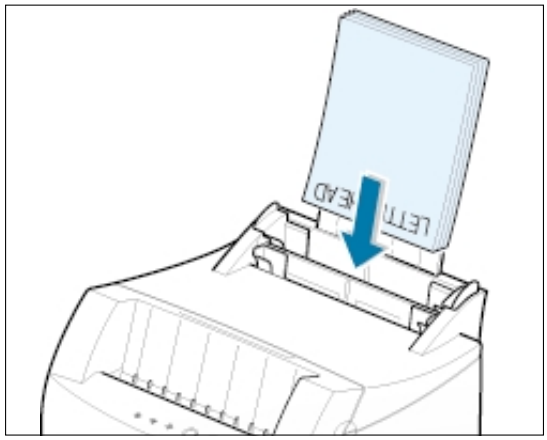

2 When you print on the preprinted paper, configure the paper source, type and size in the software application. For details, see page 5.3.

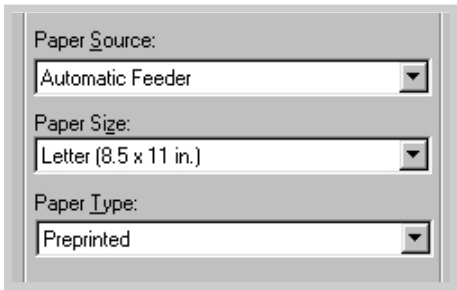

Printing on Card Stock or Custom-sized Media

Postcards, 3 by 5 in.(index) cards and other custom-sized media can be printed with the ML-1250 printer.

Guidelines

- Always insert the short edge into the input tray first. If you want to print in landscape mode, make this selection through your software. Inserting paper long-edge first may cause a paper jam.
- Do not print on card stocks that is too small or too large. The minimum size is 76 by 127 mm (3 by 5 in.) for the manual input tray and 95 by 127 mm (3.8 by 5 in.) for the automatic input tray, and the maximum size is 216 by 356 mm (8.5 by 14 in.).
- Set margins at least 6.4 mm (0.25 in.) away from the edges of the media in the software application.

1 Load print media in the input tray you want to use **with the print side up**, **and the short edge first** .

Adjust the guide to fit the width of the media.

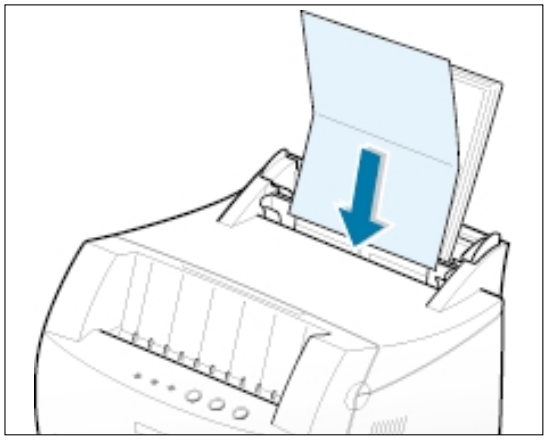

2 Push the output lever down.

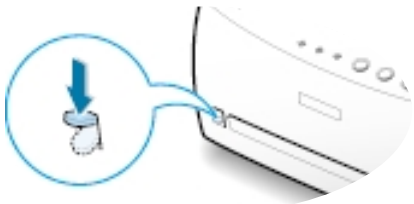

3 Configure the paper source, type in the printer driver's properties (see page 5.3) and print.

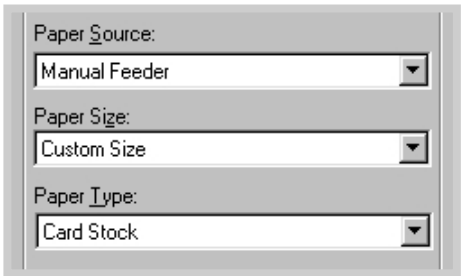

Note: If the size of your print media is not listed in the **Paper Size** box in the **Paper** tab of the printer driver properties, select **Custom Size** and set the paper size manually.

chapter 5

Printing Tasks

This chapter explains your printing options and gives common printing tasks.

Topics included in this chapter are:

- Printing a Document
- Using Toner Save Mode
- Printing Multiple Pages on One Sheet of Paper (N-Up Printing)
- Fitting Your Document to a Selected Paper Size
- Printing Posters
- Setting Graphic Properties
- Printing Watermarks
- Using Page Overlay
- Reprinting the Last Page
- Printing on a Network Environment

Printing a Document

The following procedure describes the steps required for printing from various Windows applications. The exact steps for printing a document may vary depending on the application program. Refer to your software application's documentation for the exact printing procedure.

1 Open the document you want to print.

2 Select **Print** from the **File** menu. The Print dialog box for your application will be displayed (the Print dialog box for your application may look slightly different).

The basic print settings you require are usually selected within this Print dialog box. These settings include the number of copies, paper size, and page orientation.

If you see a **Properties** button, click it. If you see **Setup**, **Printer**, or **Options**, click that button instead; then click **Properties** in the next screen.

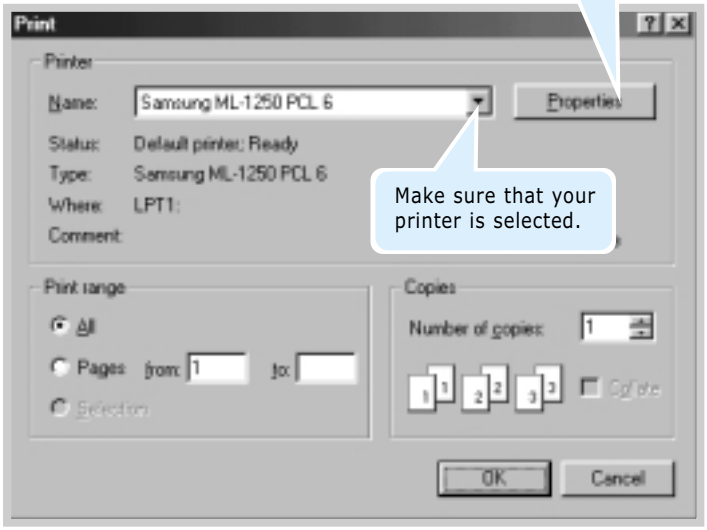

Make sure that your printer is selected.

5

3 To take advantage of the printer features provided by your ML-1250 printer, click **Properties** in the application's Print dialog box and go to step 4.

If you see **Setup**, **Printer**, or **Options**, click that button instead. Then click **Properties** in the next screen.

4 The Samsung ML-1250 PCL 6 Properties dialog box allows you to access and change printer settings.

If necessary, click the **Paper** tab to display the settings shown below. The **Paper** tab allows you to access and change the settings for basic paper handling.

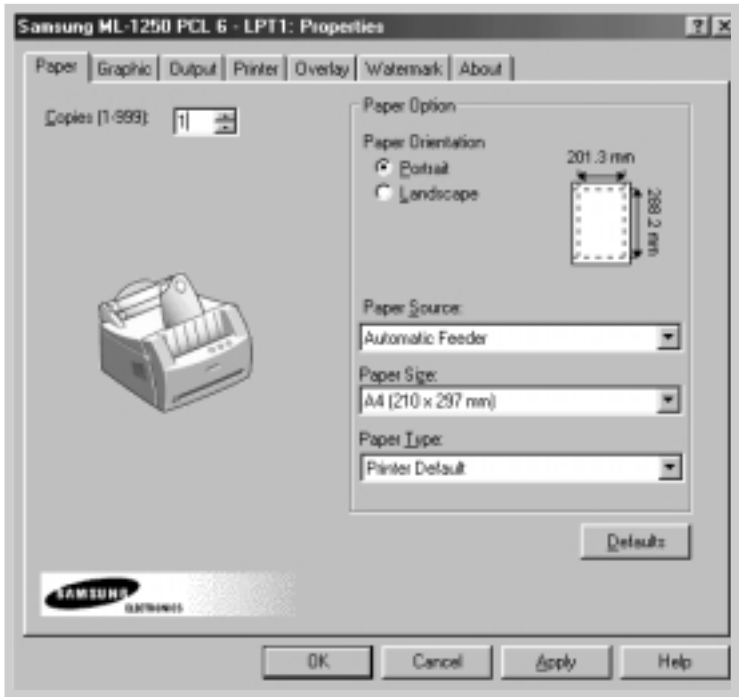

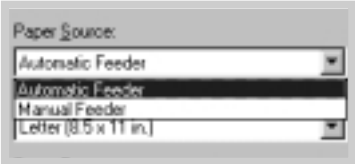

Select **Automatic Feeder** from the **Paper Source** options box unless you are printing with special media. To print with special media, select **Manual Feeder** and feed one sheet at a time into the printer. See page 4.5.

Select **Plain Paper** from the **Paper Type** options box unless you want to use a different kind of print media. To use a different kind of media, select the corresponding print media name in the **Paper Type** options box. For more information, please refer to Chapter 4 'Print Media'.

Select the paper size you have loaded in your printer.

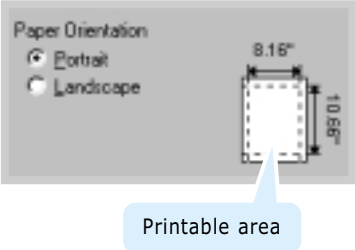

The **Paper Orientation** option allows you to select the direction in which information is printed on a page. **Portrait** prints across the width of the page, letter style. **Landscape** prints across the length of the page, spreadsheet style.

You can also see the printable area.

5 Click the other tabs on the top of the Properties dialog box to access other features, if needed.

6 When you complete the print settings, click **OK** until the Print dialog box is displayed.

7 Click **OK** to start printing.

Notes:

- Most Windows applications will override settings you specify in the printer driver. Change all print settings available in the software application first, and then any remaining settings using the printer driver.
- The settings you change remain in effect only while you are using the current program. **To make your changes permanent**, make them in the Printers folder as follows:

1. Click the Windows **Start** button.
2. Select **Settings**, and then **Printers** to open the Printers window.

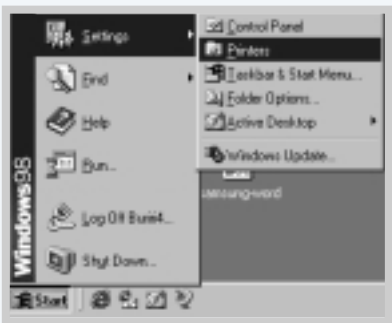

3. Select the **Samsung ML-1250 PCL 6** printer icon.
4. Click the right mouse button and select **Properties** to open the properties window.

Canceling a Print Job

There are two ways to cancel a print job.

To stop a print job from your printer

Press the **Cancel/Reprint** and hold until the control panel light blink to cancel job the printer is currently printing.

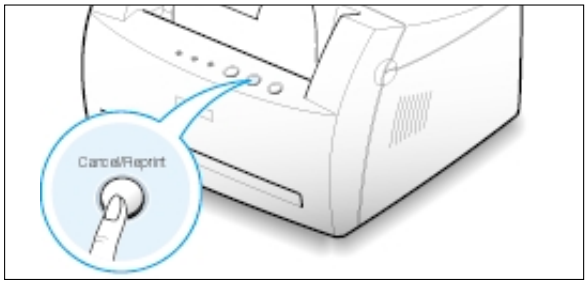

The printer will finish printing the page that is moving through the printer and delete the rest of the print job while the **Error** light is blinking. Pressing **Cancel/Reprint** cancels only the current job in the printer. If more than one print job is in printer memory, **Cancel/Reprint** must be pressed once for each job.

To stop a print job from the Printers folder

1. From the **Start** menu, select **Settings**.
2. Select **Printers** to open the Printers window, then double-click the **Samsung ML-1250 PCL 6** icon.
3. From the **Document** menu, select **Cancel Printing** (Windows 9x) or **Cancel** (Windows Me/NT 4.0/2000).

Using Help

The Samsung ML-1250 printer has a help screen that can be activated by the **Help** button in the printer's properties dialog box. You can also click ? from the upper right hand corner, and then click on any setting.

These help screens give detailed information about the printer features provided by the Samsung ML-1250 printer driver.

To restore the default printer properties setting when you change the print settings, click **Defaults** in the Samsung ML-1250 PCL 6 Properties dialog box.

Using Toner Save Mode

Toner Save mode allows the printer to use less toner on each page. Selecting this option will extend the life of your toner cartridge and reduce your cost per page, but will reduce print quality.

There are two ways to enable the Toner Save mode.

To enable this feature from your printer

Press the **Toner Save** button on the control panel. The printer must be in Ready mode (**Data** light is on).

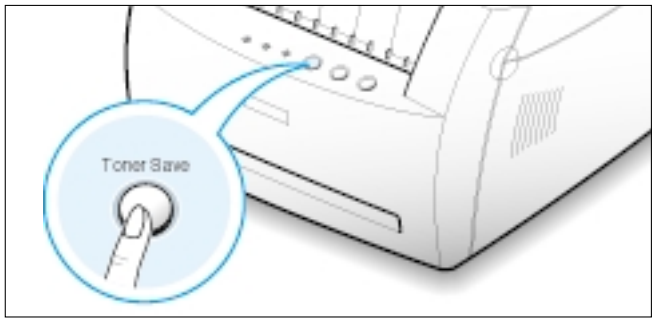

- If the button backlight is on, toner save mode activates and the printer uses less toner to print a page.
- If the button backlight is off, toner save mode is disabled and the printer prints in a normal mode.

Note: To enable or disable the Toner Save mode from the control panel, the **Toner Save Mode** option in the printer driver must be set to **Printer Setting**. See below.

To enable this feature from the software application

1. When you change the print settings from your software application, access the printer properties. See page 5.1 to access the printer properties.
2. Click the **Graphic** tab, and then select the **Toner Save Mode** option. You can select from:
   - **Printer Setting**: If you select this option, this feature is determined by the setting you've made on the control panel of the printer.
   - **Standard**: If you don't need to save toner to print a document, select this option.
   - **Save**: Select this option to allow the printer to use less toner on each page.
3. Click **OK**.

Printing Multiple Pages on One Sheet of Paper (N-Up Printing)

▲ 4 pages per sheet

▲ 9 pages per sheet

You can select the number of pages you want to print on a single sheet of paper. If you choose to print more than one page per sheet, the pages will appear decreased in size and arranged on the sheet. You can specify up to 16 pages.

1 When you change the print settings from your software application, access the printer properties. See page 5.1 to access the printer properties.

From the **Paper** tab, select the paper orientation, source, size and type.

2 Click the **Output** tab, and choose **Multiple Pages per Side** in the **Type** drop-down list. Then select the number of pages you want to print per sheet (1, 2, 4, 6, 9 or 16) in the **Pages per Sheet** drop-down list.

3 Click **Print Page Borders** if you want to print a border around each page on the sheet. **Print Page Borders** is enabled only if **Pages per Sheet** is 2, 4, 6, 9, or 16.

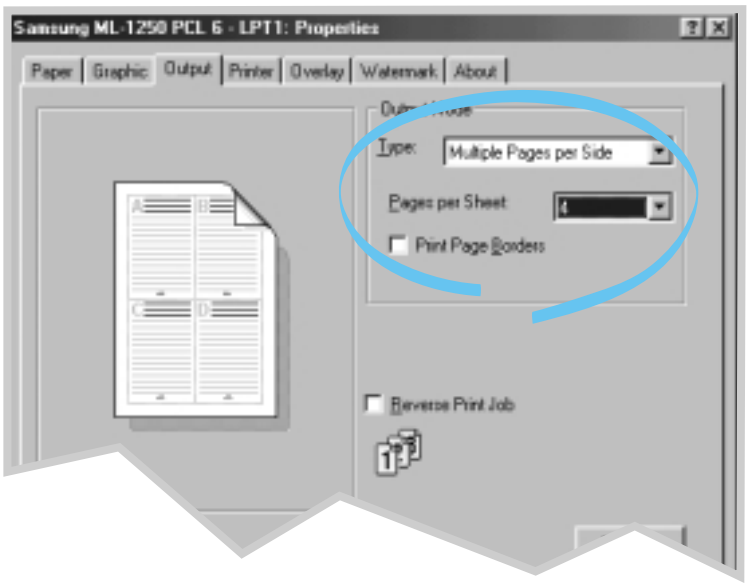

4 Click **OK**, then start printing.

Fitting Your Document To a Selected Paper Size

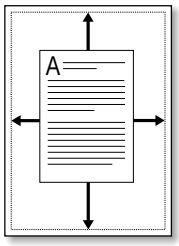

This printer feature allows you to scale your print job to any selected paper size regardless of the digital document size. This can be useful when you want to check fine details on a small document.

1 When you change the print settings from your software application, access the printer properties. See page 5.1 to access the printer properties.

2 Click the **Output** tab, and select **Fit to Page** in the **Type** drop-down list.

3 You'll see the **Application page size** and be prompted to select the **Fit to Paper Size**. Select the correct size from the drop-down list.

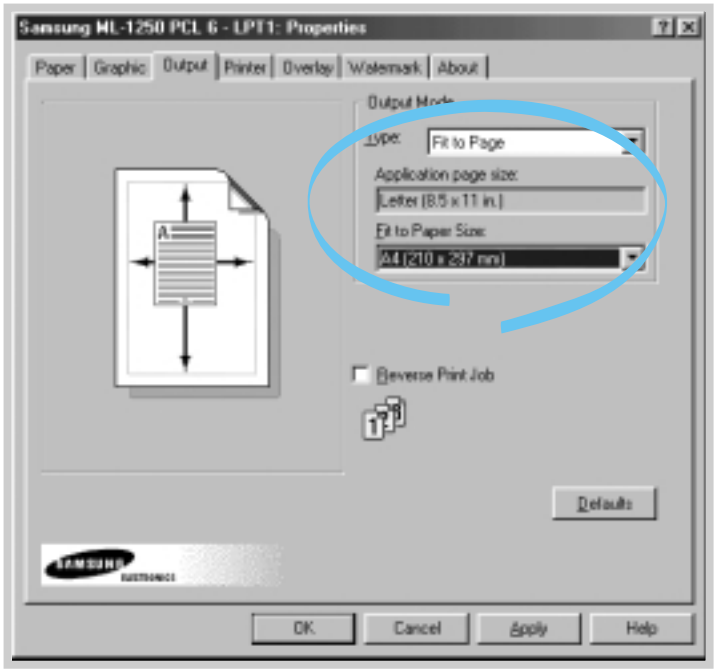

4 Click **OK**, then start printing.

Printing Posters

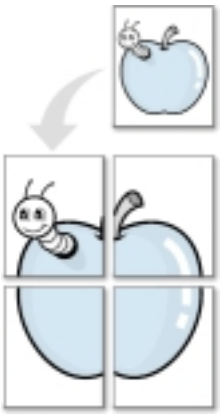

Poster printing
with 2x2 style

This feature allows you to print a single-page document onto 4, 9, or 16 sheets of paper, which can be pasted together to form one poster-size document.

1 When you change the print settings from your software application, access the printer properties. See page 5.1 to access the printer properties.

From the **Paper** tab, select the paper orientation, source, size and type.

2 Click the **Output** tab, and select **Poster** in the **Type** drop-down list.

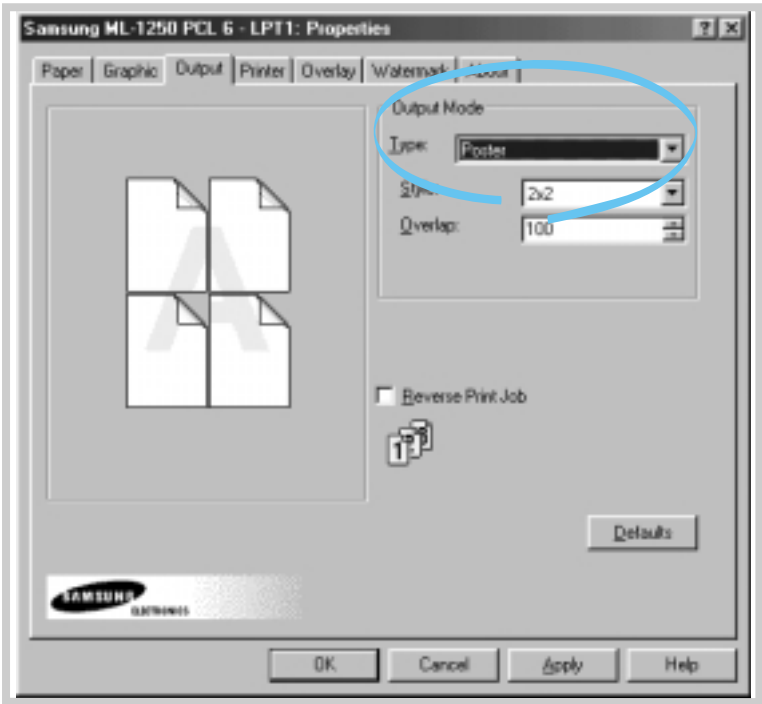

5

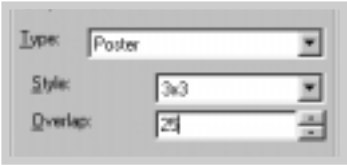

3 To determine the scaling factor, select the **Style**; **2x2**, **3x3**, **4x4**, or **Custom**.

For example, if you select **2x2**, the output will be automatically stretched to cover 4 physical pages.

If you select **Custom**, you can adjust the scaling factor manually. For example, if you specify 150%, the image will be printed across 4 pages with 150% scaled.

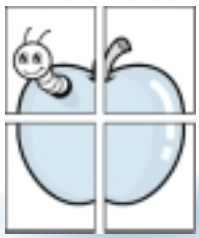

2 x 2

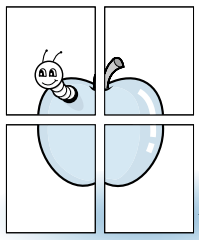

Custom (150%)

4 You may specify an overlap in pixel to make it easier to reconstruct the resulting poster.

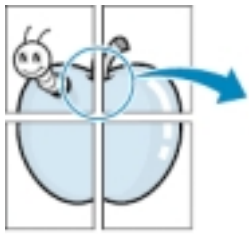

Overlap=0

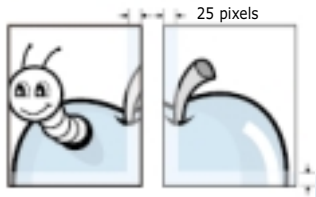

Overlap=25

5 Click **OK**, then start printing.

Setting Graphic Properties

Use the following options to adjust the print quality for your specific printing needs when you access the printer properties. See page 5.1 to access the printer properties.

If necessary, click the **Option** tab to display the settings shown below.

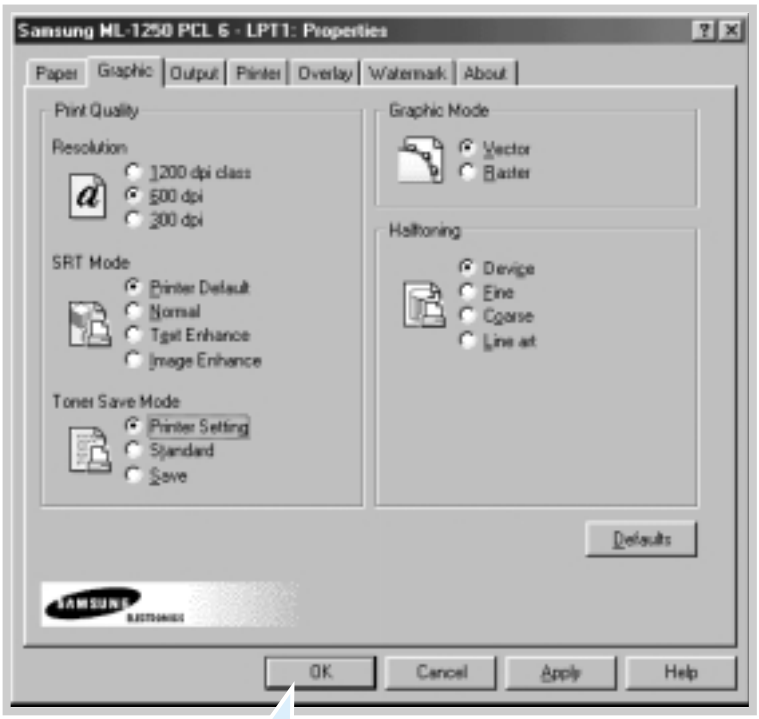

Click here to save the changes when setting is done.

5

Resolution

You can select the printing resolution; **1200 dpi class**, **600 dpi** or **300 dpi**. The higher the setting, the sharper the clarity of printed characters and graphics. Higher settings may increase the time it takes to print a document.

SRT Mode

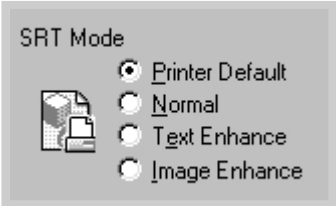

Some printed characters or images appear to have jagged or uneven edges. Set this Samsung Resolution enhancement Technology (SRT) option to improve the print quality of your text and image and make the characters and images appear smoother.

Note: When **600 dpi** is selected in the Resolution section, selecting **Text Enhance** or **Image Enhance** gives you an image quality of 1200 dpi class .

- **Printer Default** - This is determined by the setting on the printer.
- **Normal** - SRT mode is disabled. Choose this setting if graphics, particularly scanned images, are not printing clearly.
- **Text Enhance** - This setting refines the print quality of characters by smoothing out jagged edges that can occur on the angles and curves of each character.
- **Image Enhance** - This setting refines the print quality of a photo image using SRT.

Graphic Mode

Configure the printer to process graphics as raster or vector images. Setting this option tells Windows how to send graphic images to the printer. All graphics can be printed as raster images, however some geometric shapes or patterns print faster if they are printed as vector graphics.

- **Vector** – The Vector mode represents a graphic as point, lines and other geometric entities. If you select the **Vector** setting, Windows will send graphics to the printer as a mixture of vector and raster images.
- **Raster** – The Raster mode represents a graphic as a mix of dots. When you select the **Raster** setting, Windows will send all graphics to the printer as bit map raster images.

Note: Not all graphic images can print using the **Vector** setting. If you are using the **Vector** setting, and your graphic images do not print as they appear on your computer screen, select the **Raster** setting and reprint your graphic.

Halftoning

This option can be used for configuring the halftone of the printed illustration. The best way to choose a Halftoning setting for your graphic image is to experiment. Print a graphic image at each setting and choose the one you like best.

- **Device** - Choose this setting to allow the printer to determine a halftoning setting.
- **Fine** - Choose this setting when you want printed images to have a smooth, realistic, and photographic appearance. This setting provides soft contrasts between various shades of gray. This setting also works well for images originally designed with color.
- **Coarse** - Choose this setting if your graphic images were originally scanned in through a scanner.
- **Line art** - Choose this setting for graphic images with intricate lines and fine detail, like clip art graphics. This setting provides solid lines and sharp contrasts between shaded areas.

What is Halftone?

Gray-scale objects (such as photographs) whose gray dots have been converted to a pattern of groups of black dots. These groups, which are of various sizes, along with the white dots (pixels turned off), create illusions of gray shading: larger groups make the image appear black or dark gray, while smaller groups make the image appear light gray.

Printing Watermarks

The Watermark option allows you to print text over an existing document. For example, you may want to have large gray letters reading "Draft" or "Confidential" printed diagonally across the first page or all pages of a document.

There are several predefined watermarks that come with the ML-1250 printer, and they can be modified or you can add new ones to the list.

To use an existing watermark

1 When you change the print settings from your software application, access the printer properties. See page 5.1 to access the printer properties.

2 Click the **Watermark** tab, and select the desired watermark in the **Message** drop-down list. You will see the selected watermark in the preview window.

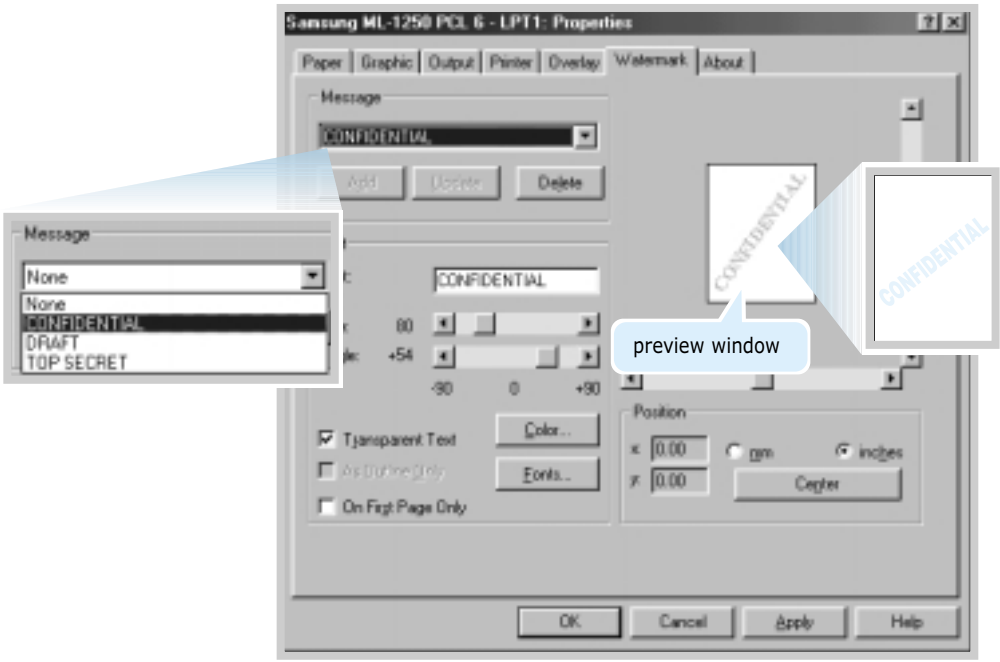

3 Click **OK**, then start printing.

To create or edit a watermark

1 When you change the print settings from your software application, access the printer properties. See page 5.1 to access the printer properties.

2 Click the **Watermark** tab, and enter the desired text message in the **Text** field. This will be displayed in the preview window. The preview window is provided so that you can see how the watermark will appear on the printed page.

3 Select the desired watermark options. You can select the font type and size, color and angle. There are three checkboxes at the bottom of the dialog box:

- **Transparent Text** – Allows the document to show through the watermark.
- **As Outline Only** – Prints the text outline of the watermark. This setting globally effects all watermarks in the list.
- **On First Page Only** – Prints the watermark only on the first page.

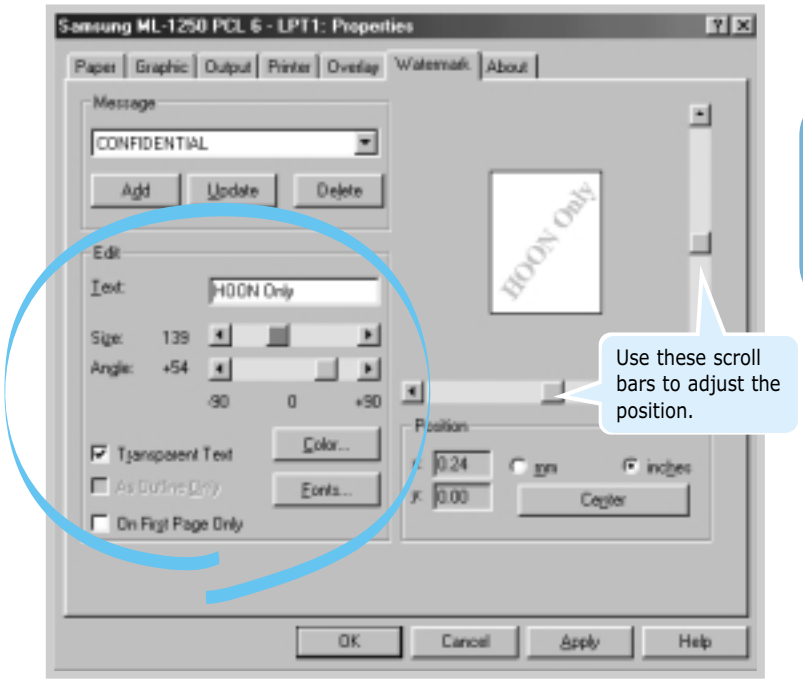

5

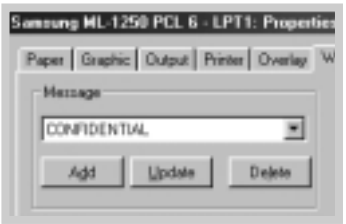

4 If you have created a new or edited an existing watermark, the **Add** and **Update** button is enabled.

To add a new watermark to the list, click **Add**.

5 If you want to edit, select the desired watermark from the list, edit, and then click **Update**.

6 When you complete the edit, click **OK**, and then start printing.

To stop printing the watermark, select **None** in the Message drop-down list.

To delete a watermark

1 When you change the print settings from your software application, access the printer properties. See page 5.1 to access the printer properties.

2 From the **Watermark** tab, select the watermark you want to delete in the **Message** drop-down list.

3 Click **Delete**.

4 Click **OK**.

Using Page Overlay

What is an Overlay?

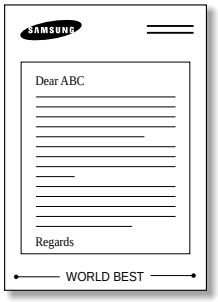

An overlay is text and/or images stored in the computer HDD as a special file format that can be printed on any document you choose. Overlays are often used to take the place of preprinted forms and letterhead paper. Rather than using preprinted letterhead, for example, you can create an overlay containing the exact same information that is currently on your letterhead. Then when you want to print a letter with your company's letterhead, you do not need to load preprinted letterhead paper in the printer. You need only tell the printer to print the letterhead overlay on your document.

Creating a New Page Overlay

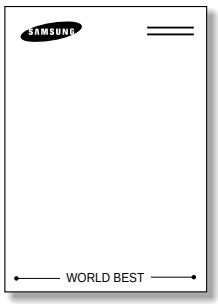

To use a page overlay, you must create a new page overlay containing your logo or image.

1 Create or open a document containing a text or image you want to use for page overlay. Position the items exactly as you wish them to appear when printed as an overlay. If needed, save the file for later use.

2 Select **Print** from the **File** menu. Then click **Properties** in the application's Print dialog box to access the printer properties. For details, see page 5.1.

3 Click the **Overlays** tab, and click **Create Overlay**.

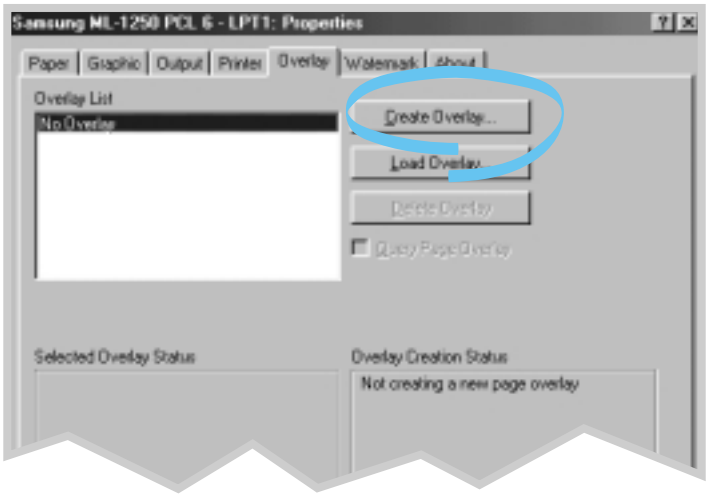

4 In the Create Overlay dialog box, type a name of up to eight characters in the **File name** box. Select the destination path if necessary. (The default is C:\FORMOVER).

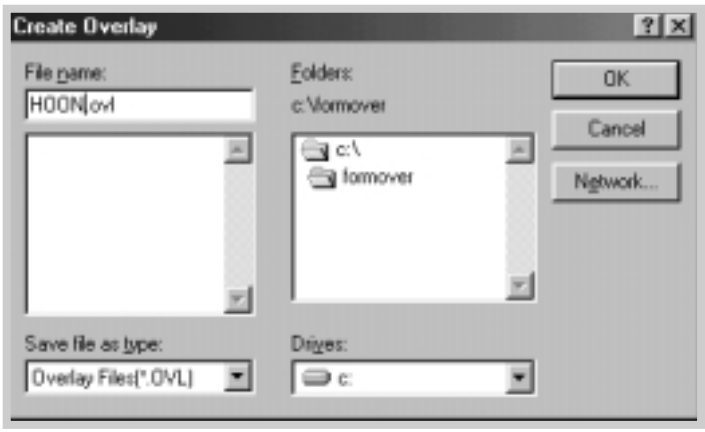

5 Click **OK**. You will see the name in the **Overlay List** box.

6 Click **OK** or **Yes** until you complete the creation.

The file is not printed out. Instead it will be stored on your computer HDD disk.

Note: The overlay document size must be the same as documents you will print with the overlay.

Using Page Overlay

After an overlay has been created, it is ready to be printed with your document. To print an overlay with a document:

1 Create or open the document you want to print.

2 When you change the print settings from your software application, access the printer properties. See page 5.1 to access the printer properties.

3 Click the **Overlays** tab, and select the desired overlay from the **Overlay List** box.

4 If the desired overlay file does not appear in the **Overlay List** box, click **Load Overlay**, and select the overlay file.

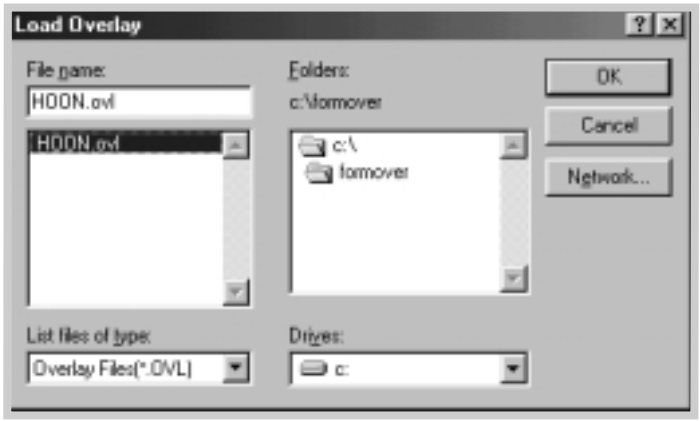

If you have stored the overlay file you want to use into an external source, you can also load the file when you access this Load Overlay window.

After you select the file, click **OK**. The file is now shown in the **Overlay List** box and is available for printing. Select the overlay from the **Overlay List** box.

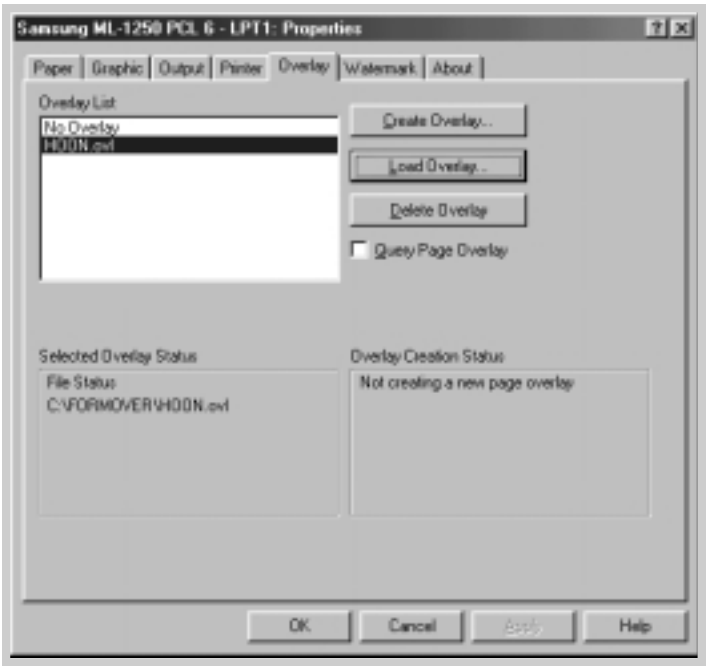

5

5 If necessary, click **Query Page Overlay**. If this box is checked, a message box will appear each time you submit a document for printing, asking you to confirm your wish to print an overlay on your document.

Answering **Yes** to the message box means that the selected overlay will be printed with your document.
Answering **No** to the message box cancels overlay printing.

If this box is empty, and an overlay has been selected, the overlay will be automatically printed with your document.

6 Click **OK** or **Yes** until the printing starts.

The selected overlay will be downloaded with your print job and printed on your document.

Deleting a Page Overlay

You can delete page overlays that are no longer used.

1 In the printer properties dialog box, click the **Overlays** tab.

2 Select the overlay you want to delete from the **Overlay List** box.

3 Click **Delete Overlay**.

4 Click **OK** until you exit the Print dialog box.

Reprinting the Last Page

The Samsung ML-1250 printer's memory always keeps the last page of the last job. If you canceled a print job due to a paper jam or other problems and you want to know which page was printed last, reprint the last page.

Press **Cancel/Reprint** briefly in Ready mode.

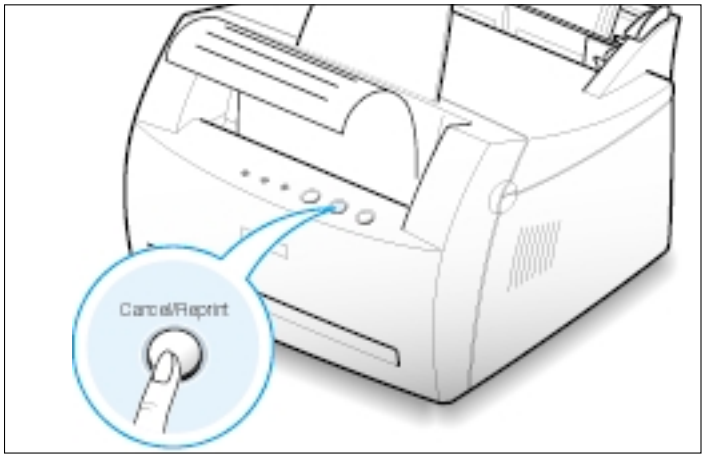

Note: If you want to prevent somebody from reprinting your document, you can turn the Reprinting feature off in the printer's properties dialog box. When you turn the feature off in the printer's properties, the **Cancel/Reprint** button on the control panel does not perform the reprinting operation.

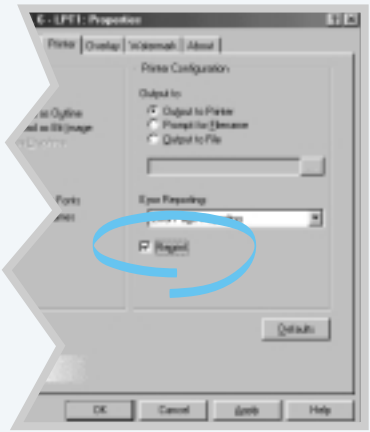

To disable this feature:

1. From the **Start** menu, select **Settings** and then **Printers**.
2. Click the right mouse button on the **Samsung ML-1250 PCL 6** printer icon and select **Properties** to open the properties window.
3. From the **Printer** tab, click **Reprint** to empty the checkbox.

   With the box empty, you cannot reprint the last page from the control panel.

   When you want to reprint the last page on the control panel, you must put a check mark on this check box.
4. Click **OK**.

5

Printing on a Network Environment

If you work in a network environment, you can connect your ML-1250 printer directly to a selected computer (called the "host computer") on the network. The printer can then be shared by other users on the network through a Windows 9x, Me, NT 4.0 or 2000 network printer connection.

Note: You need to install the Samsung ML-1250 printer driver on each computer that will print documents to the printer.

Setting Up Host Computer

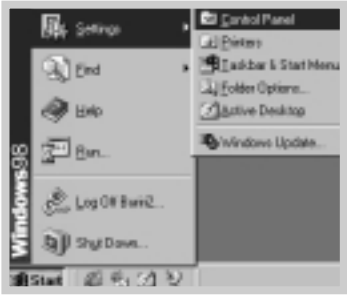

1 Start Windows.

2 From the **Start** menu, select **Control Panel**, and double-click on the **Network** icon.

3 Check the **File and Print Sharing** box, then click **OK**. Close the window.

4 Click **Start** and select **Printers** from **Settings**, then double-click your printer name.

5 Select **Properties** in the **Printers** menu.

6 Click the **Sharing** tab, then check the **Shared As** box. Fill in the Shared Name field, then click **OK**.