Printing on Different Paper for the First Page

1 When you change the print settings from your software application, access the printer properties. See page 5.2 to access the printer properties.

2 Click the **Paper** tab, and click **Different Source for First Page**.

If the box is checked, this feature is enabled and the dialog box allows you to select the desired paper source for the **First Page** and **Other Pages** independently. If the box is empty, this feature is disabled.

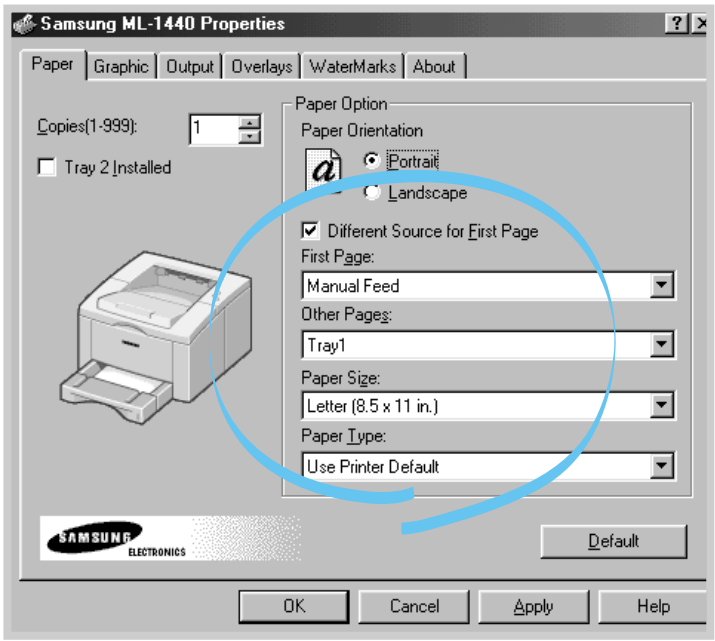

3 Click **OK**, then start printing.

Note: The paper size for all pages of the print job must be the same.

Reprinting the Last Page

The Samsung ML-1440 printer's memory always keep the last page of the last job. If you canceled a print job due to a paper jam or other problems and you want to know which page was printed last, reprint the last page.

Press **Cancel/Reprint** briefly in the ready mode.

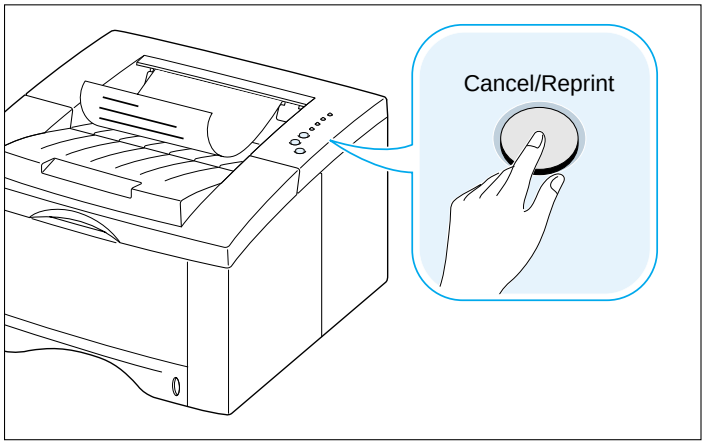

Note: If you want to prevent somebody from reprinting your document, you can turn the Reprinting feature off in the printer's properties dialog box. When you turn the feature off in the printer's properties, the **Cancel/Reprint** button on the control panel does not perform the reprinting operation.

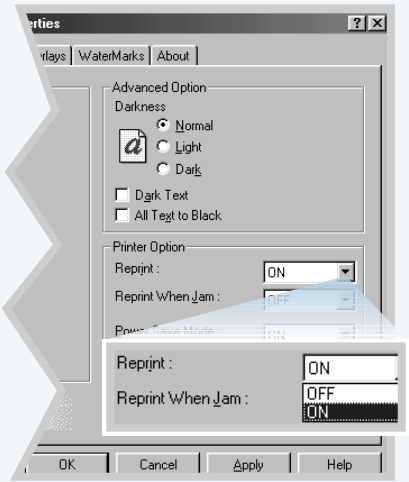

To disable this feature:

1. From the **Start** menu, select **Settings** and then **Printers**.
2. Click the right mouse button on the **Samsung ML-1440 Series** printer icon and select **Properties** to open the properties window.
3. From the **Graphic** tab, Select **OFF** from the **Reprint** drop-down list.

   With this option **OFF**, you cannot reprint the last page from the control panel.

   When you want to reprint the last page on the control panel, you must select **ON** from the list.
4. Click **OK**.

Printing on a Network Environment

If you work in a network environment, you can connect your printer directly to a selected computer (called the "host computer") on the network. The printer can then be shared by other users on the network through a Windows 9x/Me/ NT 4.0/2000/XP network printer connection.

Note: You need to install the Samsung ML-1440 printer driver on each computer that will print documents to the printer.

Windows 98/Me

Setting Up Host Computer

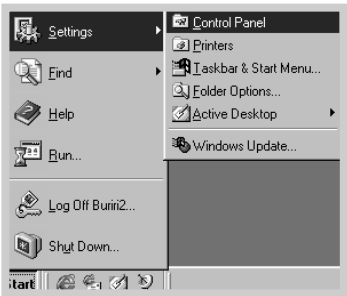

1 Start Windows.

2 Click **Start** and select **Control Panel** from **Settings**, then double-click on the **Network** icon.

3 Check the **File and Print Sharing** box, then click **OK**. Close the window.

4 Click **Start** and select **Printers** from **Settings**, then double-click your printer name.

5 Select **Properties** in the **Printers** menu.

6 Click the **Sharing** tab, then check the **Shared As** box. Fill in the **Shared Name** field, then click **OK**.

Setting Up Client PC

1 Right-click **Start**, and select **Explorer.**

2 Open your network folder in the left column.

3 Right-click the shared name, and select **Capture Printer Port**.

4 Select the port you want, check the **Reconnect at log on** box, then click **OK**.

5 From the **Start** menu, select **Settings**, then **Printers**.

6 Double-click your printer icon.

7 From the **Printers** menu, select **Properties.**

8 Press the **Details** tab, select the printer port, then click **OK**.

Windows NT/2000/XP

Setting Up Host Computer

1 Start Windows.

2 From the **Start** menu, select **Settings**, then **Printers**. (Windows NT/2000)
From the **Start** menu, select **Printers and Faxes**. (Windows XP)

3 Double-click your printer icon.

4 From the **Printer** menu, select **Sharing.**

5 Check the **Shared** box. (Windows NT)
Check the **Shared As** box. (Windows 2000)
Check the **Share this printer** box. (Windows XP)

Fill in the **Share Name** field, then click **OK**. (Windows NT)
Fill in the **Shared Name** field, then click **OK**. (Windows 2000/XP)

Setting Up Client PC

1. Right-click **Start**, and select **Explorer.**
2. Open your network folder in the left column.
3. Click the shared name.
4. From the **Start** menu, select **Settings**, then **Printers**. (Windows NT/2000)
   From the **Start** menu, select **Printers and Faxes**. (Windows XP)
5. Double-click your printer icon.
6. From the **Printer** menu, select **Properties.**
7. Press the **Ports** tab, click **Add Port**.
8. Select **Local port**, and click **New Port**.
9. Fill in the **Enter a port name** field, enter the shared name.
10. Click **OK**, and click **Close** .
11. Click **OK**. (Windows NT)
    Click **Apply**, and click **OK**. (Windows 2000/XP)

CHAPTER 6

Maintaining Your Printer

This chapter provides suggestions for high-quality and economical printing and information for maintaining the toner cartridge and the printer.

Topics included in this chapter are:

- Maintaining Toner Cartridge
- Cleaning the Printer

Maintaining Toner Cartridge

Toner cartridge storage

To get the most from the toner cartridge, keep the following guidelines in your mind.

- Do not remove the toner cartridge from its package until you are ready to use it. The shelf life of a cartridge in an unopened package is approximately 2 years. The shelf life of a cartridge in an opened package is approximately 6 months.
- Do not refill toner cartridges. **The printer warranty does not cover damage caused by using a refilled cartridge.**
- Store toner cartridges in the same environment as the printer.
- Do not remove a toner cartridge from the printer except to replace it, clean it or clear a paper jam. Replace the cartridge immediately.
- To prevent damage to the toner cartridge, do not expose it to light for more than a few minutes.

Toner cartridge life expectancy

The life of the toner cartridge depends on the amount of toner that print jobs require. When printing text at 5 % coverage, a new toner cartridge lasts an average of 6,000 pages. (But, the toner cartridge supplied with the printer lasts an average of 3,000 pages.)

Recycling toner cartridge

After you install a new toner cartridge (see page 2.3), follow the instructions included in the toner cartridge box to recycle the old cartridge.

Saving toner

To save toner, press the **Toner Save** button on the printer control panel. The button will be lit. You can also enable the **Toner Save Mode** in your printer properties. Refer to "Using Toner Save Mode" on page 5.6. Selecting this option will expand the life of the toner cartridge and reduce your cost per page, but will reduce print quality.

Redistributing Toner

When toner is low, faded or light areas may appear on a printed page. You may be able to temporarily improve print quality by redistributing the toner. The following procedures may allow you to finish the current print job before replacing the toner cartridge.

1 Open the top cover.

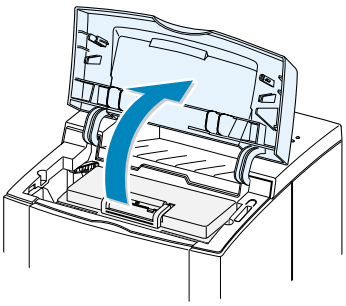

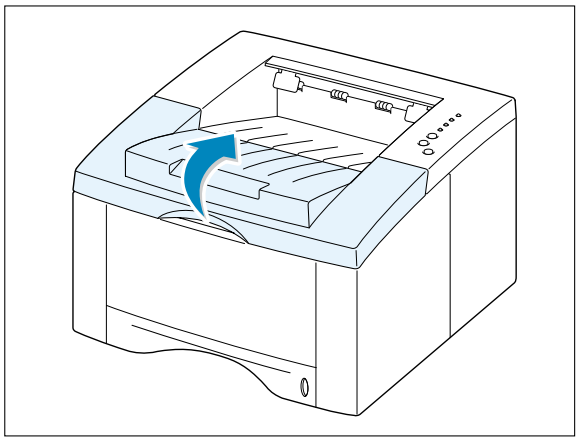

2 Remove the toner cartridge from the printer.

CAUTIONS:

- Avoid reaching too far into the printer. **The fusing area may be hot**.
- To prevent damage to the toner cartridge, **do not expose it to light for** more than a few minutes.

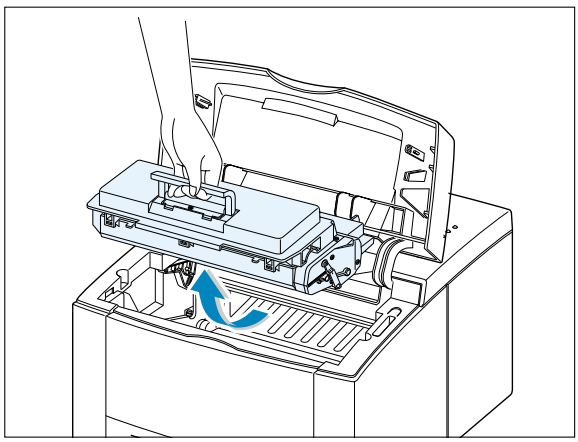

3 Gently shake the toner cartridge from side to side 5 or 6 times to redistribute the toner.

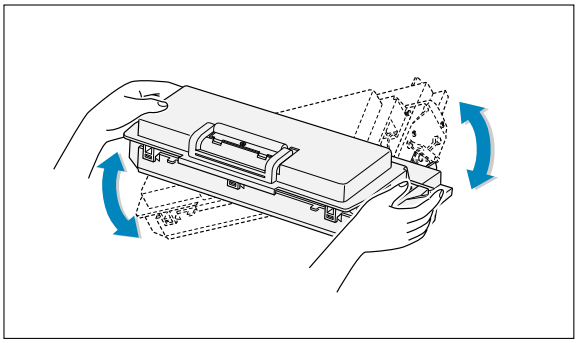

Note: If the toner gets on your clothing, wipe it off with a dry cloth and wash clothing in cold water. **Hot water sets toner into fabric**.

4 Reinsert the toner cartridge into the printer. Be sure that the toner cartridge is firmly in its place.

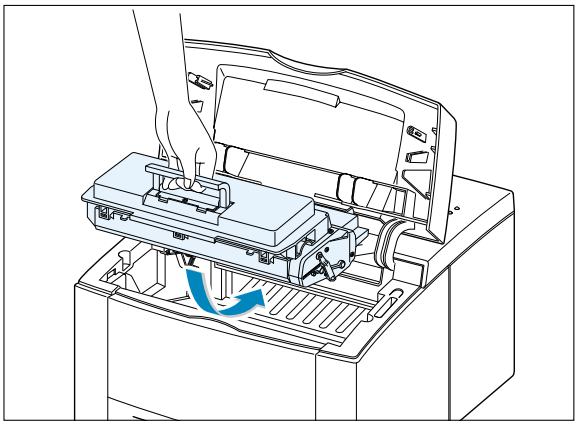

5 Firmly close the cover.

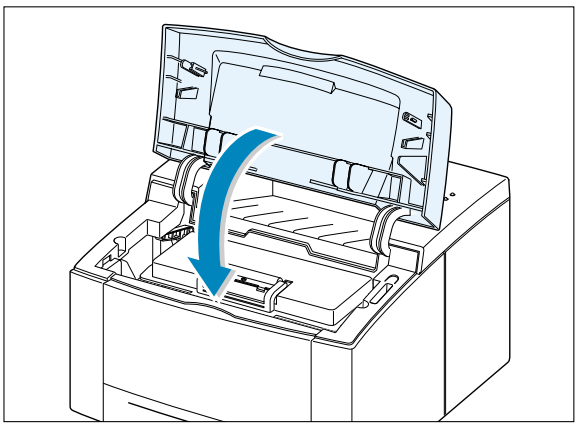

If the print remains light

Remove the old cartridge and install a new toner cartridge. See "Install the Toner Cartridge" on page 2.3.

Cleaning the Printer

To maintain print quality, follow the cleaning procedures below every time the toner cartridge is replaced or whenever print quality problems occur. As much as possible, keep the printer free from dust and debris.

Notes:

- Do not use ammonia-based cleaners or volatile solvents such as thinner, on or around the printer. These can damage the printer.
- While cleaning the inside of the printer, be careful not to touch the transfer roller (located underneath the toner cartridge). The oil from your hands on the roller can cause print quality problems.

Cleaning the Outside

Wipe the outside surface of the printer with a soft, clean, lint-free cloth. You can dampen the cloth slightly with water, but be careful not to be let any water drip onto the printer or inside of it.

Cleaning the Inside

During the printing process, paper, toner, and dust particles can accumulate inside the printer. Over time, this buildup can cause print quality problems such as toner specks or smearing. Cleaning inside the printer will eliminate or reduce these problems.

Cleaning inside the printer

1. **Turn the printer off** and unplug the power cord, then wait for the printer to cool.
2. Open the top cover and remove the toner cartridge.
3. With a dry, lint-free cloth, wipe away any dust and spilled toner from the toner cartridge area and the toner cartridge cavity.

Note: To prevent damage to the toner cartridge, do not expose it to light for more than a few minutes. Cover it with a piece of paper, if necessary. Also, do not touch the black transfer roller inside the printer. By doing so, you can damage the printer.

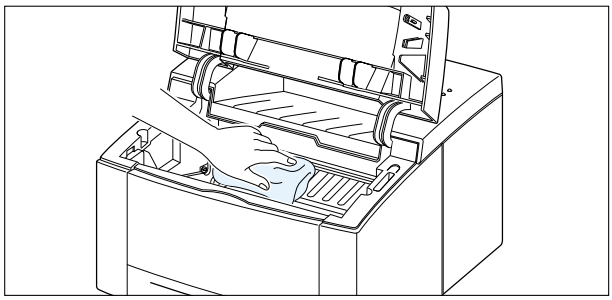

4 Locate the long strip of glass (LSU) inside the top of the cartridge compartment, and gently swab the glass to see if dirt turns the white cotton black.

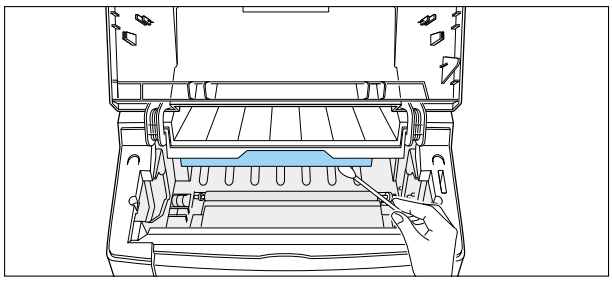

5 Reinsert the toner cartridge and close the top cover. Then, turn the printer on.

Printing a cleaning sheet

Printing a cleaning sheet cleans the drum inside the toner cartridge. Use this process if you are experiencing blurred, faded or smeared printouts. This process will produce a page with toner debris, which should be discarded.

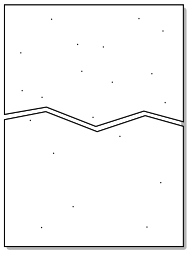

1 Make sure the printer is turned on and in the ready state and that there is paper loaded in the paper tray.

2 Press and hold **Demo** on the control panel for about 10 seconds until all control panel lights remain steadily lit, then release.

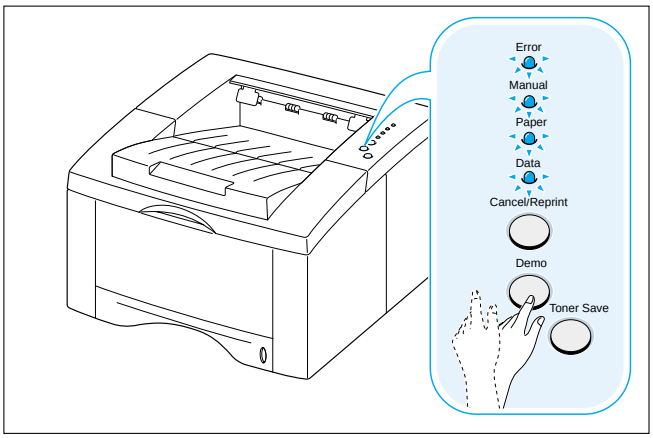

Note: The cartridge cleaning process takes some time. To stop the printing, **turn the power off**.

3 Your printer automatically picks up a sheet of paper from the paper tray and prints out a cleaning sheet with the dust or toner particles on it.

CHAPTER 7

Problem Solving

This chapter gives helpful information for what to do if you encounter a printer error. It provides information on the following topics:

- Troubleshooting Checklist
- Solving General Printing Problems
- Clearing Paper Jams
- Solving Print Quality Problems
- Troubleshooting Error Messages
- Common Windows Problems
- Common Macintosh Problems

Troubleshooting Checklist

If the printer is not working properly, complete the following checklist in order. If the printer does not pass a step, follow the corresponding troubleshooting suggestions.

Check	Solution
Make sure that the **Data** light on the control panel is on.	• If no lights are on, check the power cord connection. Check the power switch. Check the power source by plugging into another outlet. • If other lights are on, go to "Troubleshooting Error Messages" on page 7.21.
Press the **Demo** button to print a demo page to verify that the printer is feeding paper correctly. See page 2.9.	• If a demo page does not print, check the paper supply in the paper tray. • If the paper jams in the printer, go to " Clearing Paper Jams" on page 7.6. • If the **Error** indicator light is illuminated on the control panel, go to "Troubleshooting Error Messages" on page 7.21.
Check the demo page to see if it is printed correctly.	If there is a print quality problem, go to "Solving Print Quality Problems" on page 7.15.
Print a short document from a software application to verify that the computer and printer are connected and are communicating correctly.	• If the page does not print, check the cable connection between the printer and computer. • Check the print queue or print spooler (print monitor in Mac) to see if the printer has been paused. • Check the software application to make sure you are using the proper printer driver and communication port. If the page is interrupted during printing, go to "Solving General Printing Problems" on page 7.2.
If completing the checklist did not diagnose the problem with the printer, check the following troubleshooting sections.	• "Solving General Printing Problems" on page 7.2. • "Troubleshooting Error Messages" on page 7.21. • "Common Windows Problems" on page 7.24. • "Common Macintosh Problems" on page 7.25.

Solving General Printing Problems

If you have any problems with the operation of your ML-1440 printer, refer to the table for suggested solutions.

Problem	Possible Cause	Solution
The printer does not print.	The printer is not receiving power.	If no lights are on, check the power cord connections. Check the power switch and the power source.
	Your printer is not selected as the default printer.	Select **Samsung ML-1440 Series** as your default printer.
	Check the printer for the following:	• The printer cover is not closed. • Paper is jammed. • No paper is loaded. • Toner cartridge is not installed. • Printer system error occurs. Contact a service representative.
	The printer may be in manual feed mode and out of paper. (The **Manual** and the **Data** lights are blinking.)	Add paper to the Manual tray, and press the **Demo** button on the printer's control panel.
	The connection cable between the computer and the printer is not connected properly.	Disconnect the printer cable and reconnect it.
	The connection cable between the computer and the printer is defective.	If possible, attach the cable to another computer that is working properly and print a job. You may also try using a different printer cable.
	The port setting is incorrect.	Check the Windows printer setting to make sure that the print job is sent to the correct port (for example, LPT1). If the computer has more than one port, make sure the printer is attached to the correct one.

Problem	Possible Cause	Solution
The printer does not print. (continued)	The printer may be configured incorrectly.	Check the printer properties to make sure that all print settings are correct.
	The printer driver may be incorrectly installed.	Remove the printer driver, then reinstall the printer driver. Try printing a demo page.
	The printer is malfunctioning.	Check the lights on the control panel to determine if the printer is indicating a system error.
Printer selects media from the wrong paper source.	The paper source selection in the printer properties may be incorrect.	For many software applications the paper source selection is found under the **Paper** tab within the printer properties. Select the correct paper source.
Paper does not feed into the printer.	Paper has not been loaded correctly.	Remove paper from the paper tray and reload it correctly.
	There is too much paper in the paper tray.	Remove excess paper from the tray.
	The paper is too thick.	Use only paper that meets the specifications required by the printer.
Print job is extremely slow.	The job may be very complex. The maximum speed of 14 pages per minute cannot be exceeded even when more memory is added.	Reduce the complexity of the page or try adjusting the print quality settings. If this problem occurs frequently, add memory to the printer.
	If using Windows 9x/Me, the Spooling Setting may be set incorrectly.	From the **Start** menu, choose **Settings** and **Printers**. Right-click the **Samsung ML-1440 Series** printer icon, choose **Properties**, click the **Details** tab, and then choose the **Spool Settings** button. Select the desired spool setting from the available choices.

Problem	Possible Cause	Solution
Half of the page is blank.	The page layout is too complex.	Simplify the page layout and remove any unnecessary graphics from the document, if possible.
	The page orientation setting may be incorrect.	Change the page orientation in your application.
	The paper size and the paper size settings do not match.	Make sure that the paper size in the print settings matches the paper in the paper tray.
The paper keeps jamming.	There is too much paper in the paper tray.	Remove excess paper from the tray. If printing special media, use the Manual Tray.
	An incorrect type of paper is being used.	Use only paper that meets the specifications required by the printer.
	An incorrect output method is being used.	Media such as thick paper should not be printed using the standard face-down stacker. Use the rear face-up output tray instead.
	There may be debris inside the machine.	Open the top cover and remove the debris.
The printer prints, but the text is wrong, garbled, or incomplete.	The printer cable is loose or defective.	Disconnect the printer cable and reconnect it. Try a print job that you know works. If possible, attach the cable and printer to another computer and try a print job that you know works. Finally, try a new printer cable.
	The wrong printer driver was selected.	Check the application's printer selection menu to make sure that your printer is selected.

Problem	Possible Cause	Solution
The printer prints, but the text is wrong, garbled, or incomplete. (continued)	The software application is malfunctioning.	Try printing a job from another application.
	The operating system is malfunctioning.	Exit Windows and reboot the computer. Turn the printer off and then back on again.
Pages print, but are totally blank.	The toner cartridge is defective or out of toner.	Replace the toner cartridge.
	The sealing tape may still be in the toner cartridge.	Remove the toner cartridge and pull out the sealing tape. Reinstall the toner cartridge, and check by printing a demo page.
	The file may have blank pages.	Check the file to make sure that it does not contain blank pages.
	Some parts, such as the controller or the board, may be defective.	Contact a service representative.

Clearing Paper Jams

Occasionally, paper can become jammed during a print job. Some of the causes include:

- The paper tray is loaded improperly or overfilled.
- The paper tray has been pulled out during a print job.
- The top cover has been opened during a print job.
- Paper that does not meet paper specifications has been used. See "Paper Specifications" on page A.2.
- Paper that is outside of the supported size range has been used. See "Paper Specifications" on page A.2.

If a paper jam occurs, the **Paper** and the **Error** lights remain lit on the control panel. Find and remove the jammed paper. If the location of the paper jam is not obvious, look inside the printer.

Output Area

Note: Paper jams in this area may result in loose toner on the page. If you get any toner on your clothes, wash them in cold water because hot water will set the toner into the fabric.

1 If the paper is almost completely visible from the top output tray, pull the remaining paper carefully out of the printer.

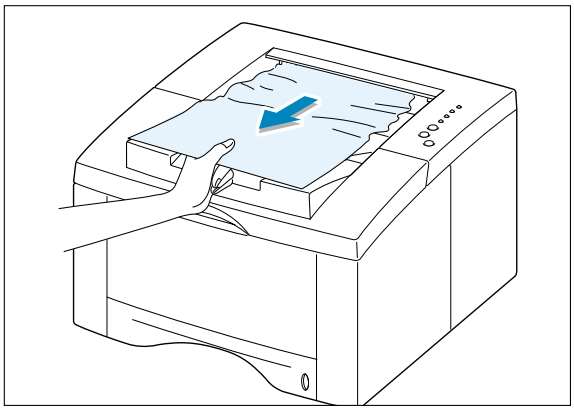

2 If the jammed paper is not visible or there is resistance when you pull the paper, open the rear output tray.

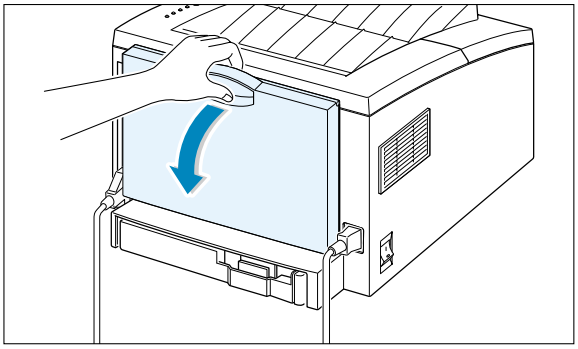

3 Remove the stopper as shown, then push the tray down so that it is open at 90 degrees angle.

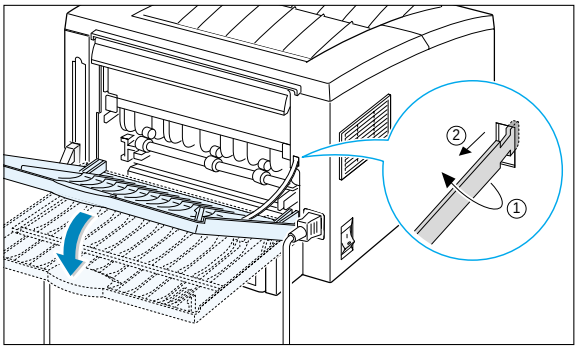

4 If there is resistance when you pull the paper, squeeze the handle on the right end of the exit roller ❶, then pull the roller in the direction of arrow ❷ .

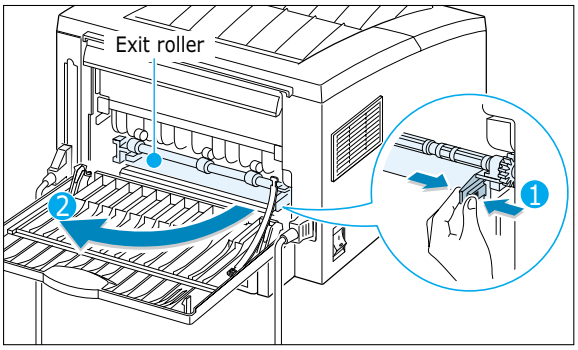

5 Remove the jammed paper.

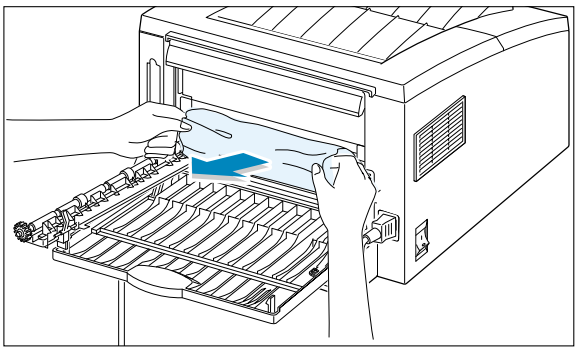

6 Replace the exit roller.

Make sure that you click the right end of the roller back in place. If you fail to do so, the printer system will recognize that the printer cover is open or that a system fuser error has occurred, and the **Error** light on the control panel will turn on.

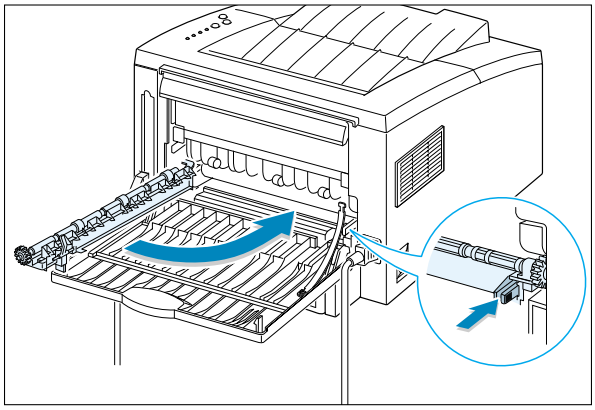

7 Replace the stopper as shown, and close the rear output tray.

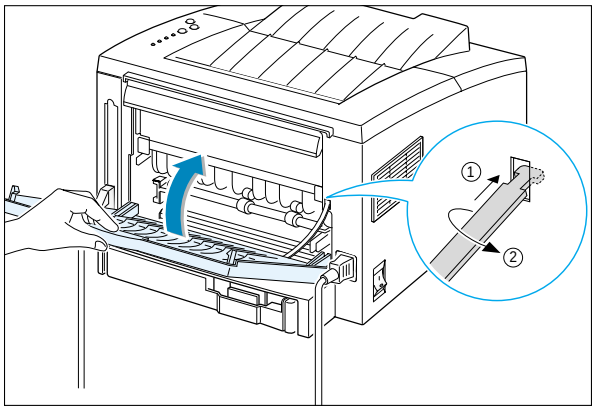

8 To resume printing, open the top cover, and then close it close it again.

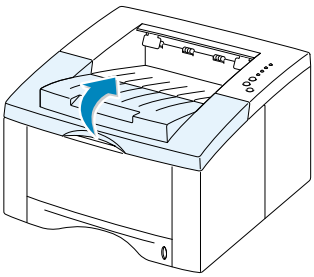

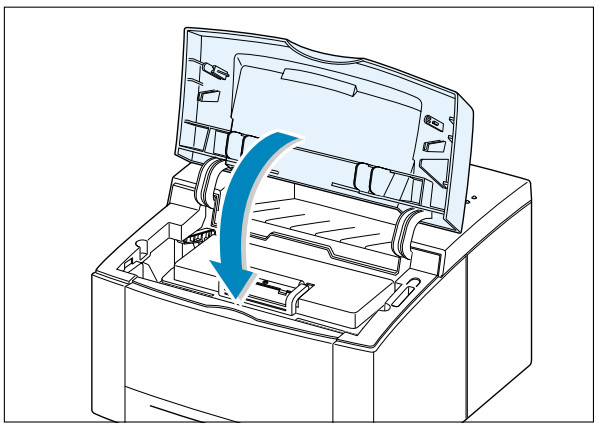

Note: If the **Paper** and the **Error** lights do not turn off, there is still jammed paper inside the printer. Check the input area and the inside of the printer.

Input Area

Note: If paper has entered the toner cartridge area, follow the instructions on page 7.10. It is easier to remove such jams from the inside of the printer than the paper input area.

1 Slide out Auto tray to expose the jammed paper.

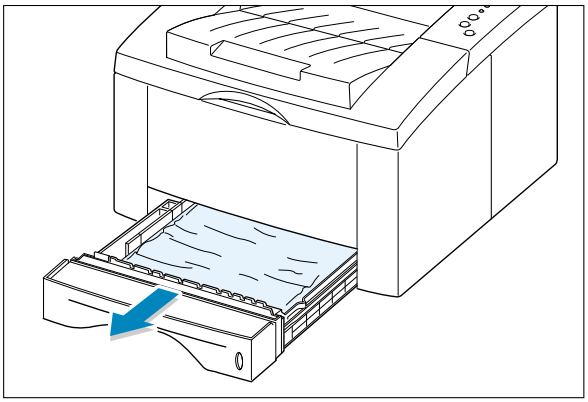

2 Remove any misfed paper by pulling it out by the visible edge from the tray. Make sure that all of the paper is properly aligned in the tray.

Note: If the paper is jammed in the paper feed area and cannot be accessed from inside the printer, remove Tray 1 from the printer and carefully pull the jammed paper free from the printer.

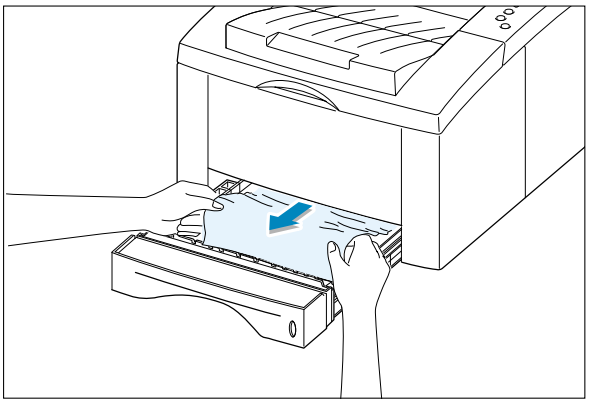

3 Slide the tray back into the printer.

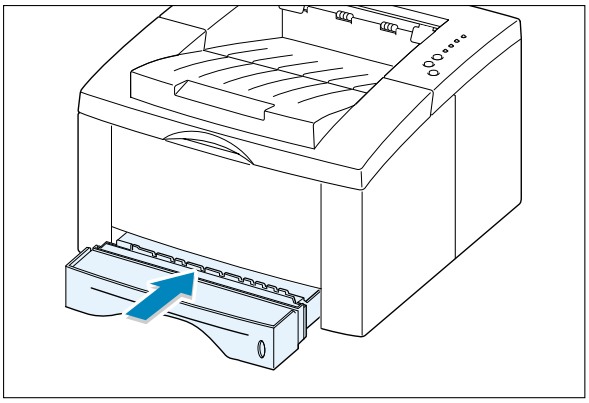

4 To resume printing, open the top cover, and then close it again.

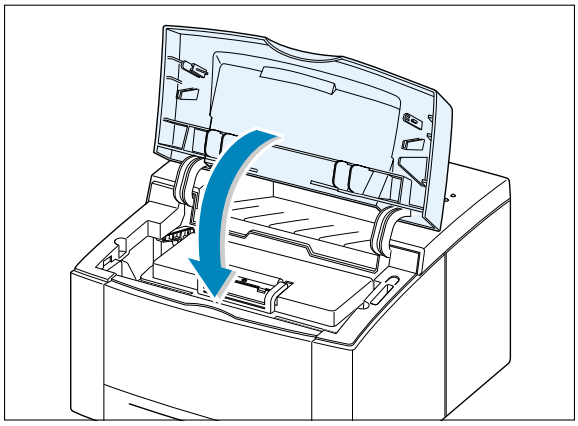

Note: If the **Paper** and the **Error** lights do not turn off, there is still jammed paper inside the printer. Check the inside of the printer.

Inside the Printer

Note: Paper jams in this area may result in loose toner on the page. If you get any toner on your clothes, wash them in cold water because hot water will set the toner into the fabric.

1 Open the top cover and remove the toner cartridge.

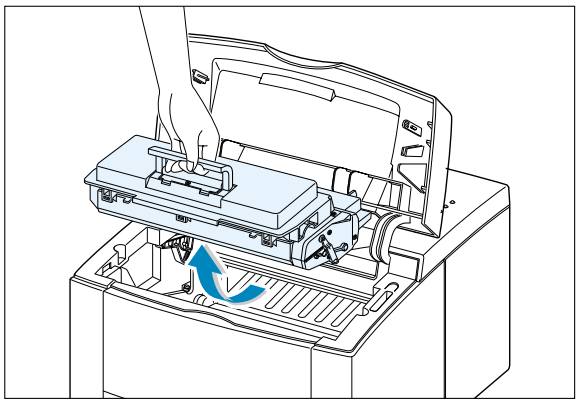

CAUTION: To prevent damage to the toner cartridge, do not expose it to light for more than a few minutes. Place a piece of paper over the top of the toner cartridge to shield it while it is out of the printer.

2 Carefully lift up the guide feed.

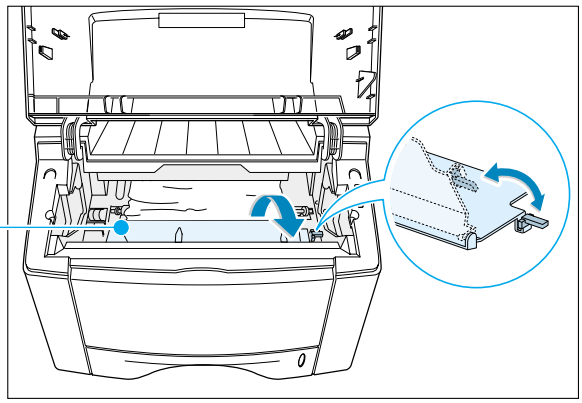

3 Gently pull the paper toward you to remove it from the printer.

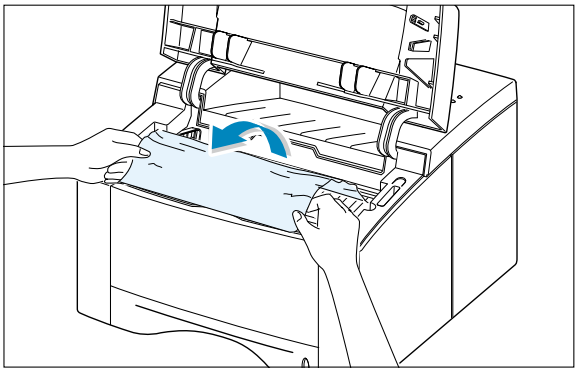

4 Flip down the guide feed, and reinstall the toner cartridge.

Note: If the toner cartridge is difficult to reinstall, make sure the guide feed has been flipped back down into position.

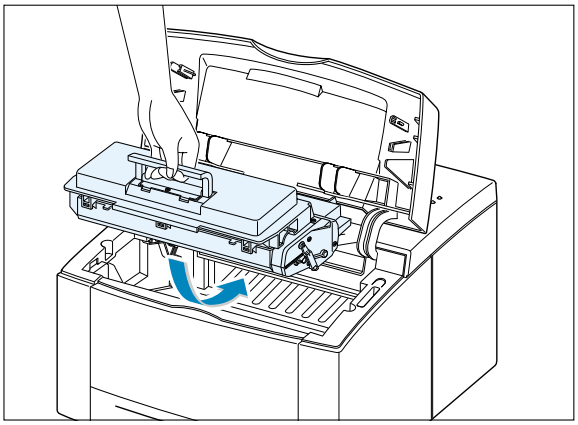

5 Close the top cover. Printing can be resumed.

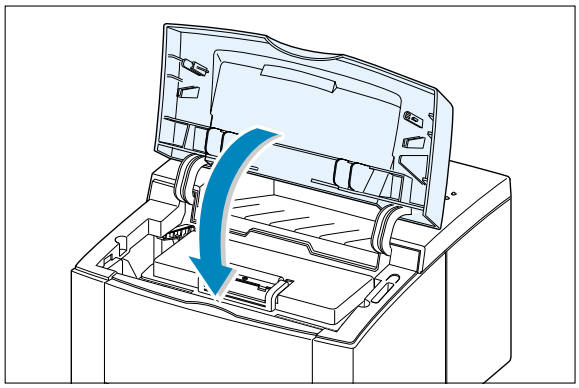

Note: If you have the optional Tray 2 installed, and cannot find the jammed paper in the output or input area, or inside the printer, the paper jam may have occurred in the optional Tray 2.
See the next page to clear the jammed paper in the optional tray.

In the Optional Tray 2

1 Pull the option Tray 2 out of the printer.

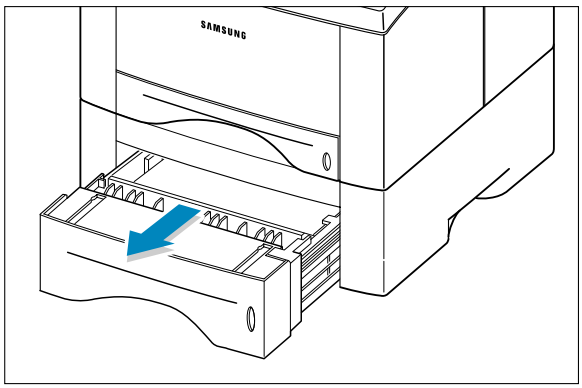

2 If you see the jammed paper, remove the paper from the tray.

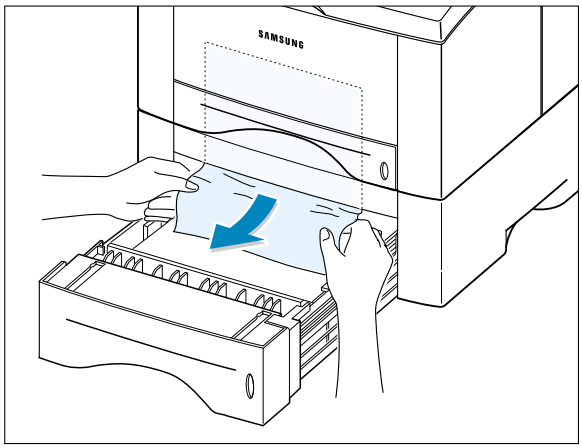

3 If you cannot find the jammed paper in the Tray 2, pull the upper Tray 1 half way out of the printer, and remove the paper as shown in the figure at right.

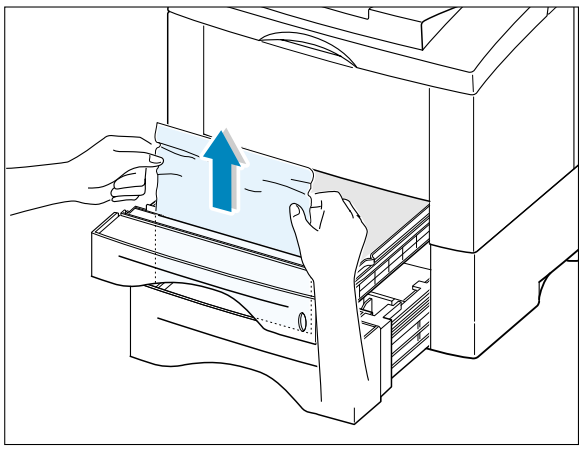

4 Slide the trays back into the printer. Open the top cover, then close it again. Printing can be resumed.

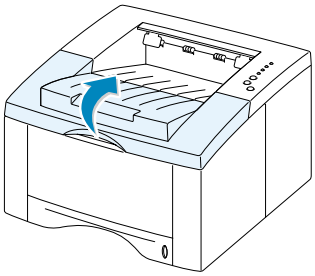

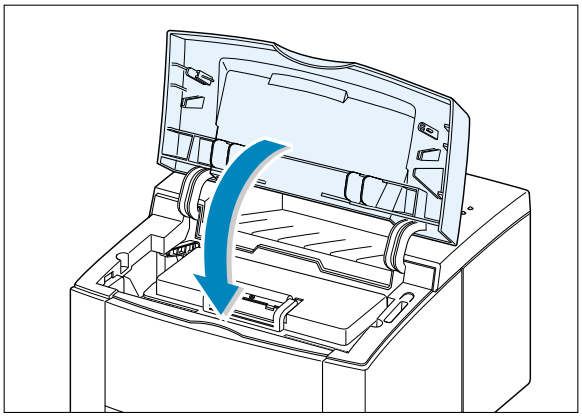

Tips for Avoiding Paper Jams

By selecting correct paper types and loading them properly, you should be able to avoid most paper jams. If paper jams occur, follow the steps outlined in "Clearing Paper Jams" on page 7.6. If jams occur frequently, make sure you are following these tips to avoid jams.

- Follow the procedures in "**Load Paper**" on page 2.5 to load the paper properly. Make sure the adjustable guides are positioned correctly.
- Do not overload the paper tray. Make sure the paper is under the paper capacity mark on the inside of the paper tray.
- Do not pull out the paper tray while print jobs are in process.
- Flex, fan and straighten the paper before loading it.
- Do not load stacks of labels or transparencies in the Tray 1. Labels or transparencies must be fed using the Manual Tray.
- Do not load wrinkled, creased, damp or highly curled paper.
- Do not mix paper types in the paper tray.
- Use only recommended print media. See "Paper Specifications" on page A.2.
- Make sure that the recommended print side is facing down when loading the paper into the Tray 1 or optional Tray 2 and facing up when loading into the Manual Tray.
- Keep print media stored in an acceptable environment.

Solving Print Quality Problems

Print Quality Checklist

General print quality problems can be solved by following the checklist below.

- Check the printer properties to make sure that you are using the best available print quality option (see page 5.18).
- Redistribute the toner in the toner cartridge (see page 6.2).
- Clean the inside of the printer (see page 6.4).
- Adjust the print resolution from the printer properties (see page 5.18).
- Check to make sure that Toner Save Mode is off (see page 5.6).
- Troubleshoot general printing problems (see page 7.2).
- Install a new toner cartridge, then check print quality again (see page 2.3).

Solving Print Quality Problems

Problem	Solution
Light or faded print 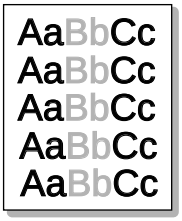 	If a vertical white streak or faded area appears on the page: • The toner supply is low. You may be able to temporarily extend the toner cartridge life. See "Redistributing the Toner" on page 6.2. If this does not improve the print quality, install a new toner cartridge. • The paper may not meet paper specifications (for example, the paper is too moist or too rough). See "Paper Specifications" on page A.2. • If the whole page is light, the print resolution setting is too light or Toner Save Mode may be on. Adjust the print resolution and darkness setting within the printer properties. See page 5.6 and 5.18 respectively. • A combination of faded and smeared defects may indicate that the toner cartridge needs cleaning. See "Cleaning the Printer" on page 6.4. • The surface of the LSU part inside the printer may be dirty. Clean the LSU (see page 6.5).

Problem	Solution
Toner specks 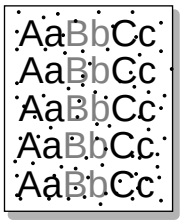 	• The paper may not meet paper specifications (for example, the paper is too moist or too rough). See "Paper Specifications" on page A.2. • The transfer roller may be dirty. See "Cleaning the Inside" on page 6.4. • The paper path may need cleaning. See "Cleaning the Inside" on page 6.4.
Dropouts 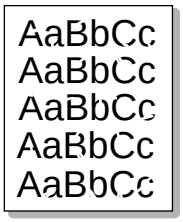 	If faded areas, generally rounded, occur randomly on the page: • A single sheet of paper may be defective. Try reprinting the job. • The moisture content of the paper is uneven or the paper has moist spots on its surface. Try a different kind or brand of paper. See "Paper Specifications" on page A.2. • The paper lot is bad. The manufacturing processes can cause some areas to reject toner. Try a different kind or brand of paper. • The toner cartridge may be defective. See "Repetitive vertical defects" on page 7.17. • If these steps do not correct the problems, contact a service representative.
Vertical lines 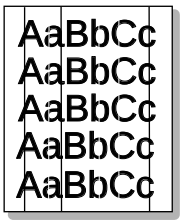 	If black vertical streaks appear on the page: • The photosensitive drum inside the toner cartridge has probably been scratched. Install a new toner cartridge. If white vertical streaks appear on the page: • The surface of the LSU part inside the printer may be dirty. Clean the LSU (see page 6.5).

Problem	Solution
Gray background 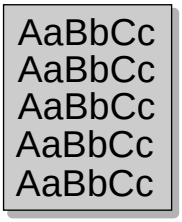 	If the amount of background toner shading becomes unacceptable, the procedures below may help to clear the condition: • Change the paper to a lighter basis weight. See "Paper Specifications" on page A.2. • Check the printer's environment; very dry (low humidity) or high humidity (higher than 80 % RH) conditions can increase the amount of background shading. • Install a new toner cartridge.
Toner smear 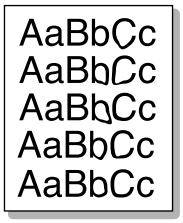 	• Clean the inside of the printer. See "Cleaning the Inside" on page 6.4. • Check the paper type and quality. See "Paper Specifications" on page A.2. • Try installing a new toner cartridge.
Repetitive vertical defects 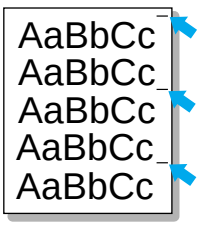 	If marks repeatedly appear on the printed side of the page at even intervals: • The toner cartridge may be damaged. If a repetitive mark occurs every 95 mm or 38 mm on the page, print the cleaning sheet several times to clean the cartridge (see page 6.5). If you still have the same problems, install a new toner cartridge. • Parts in the printer may have toner on them. If the defects occur on the back of the page, the problem will likely correct itself after a few more pages. • The fusing assembly may be damaged. Contact a service representative.

Problem	Solution
Background scatter 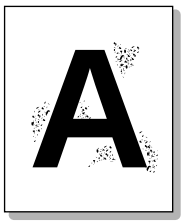	Background scatter results from bits of toner distributed on the printed page. • The paper may be too damp. Try printing with a different batch of paper. Do not open packages of paper until necessary so that the paper does not absorb too much moisture from the air. • If background scatter occurs on an envelope, change your printing layout to avoid printing over areas that have overlapping seams on the reverse side. Printing on seams can cause this problem. • If background scatter covers the entire surface of a printed page, adjust the print resolution through your software application or the printer properties.
Misformed characters 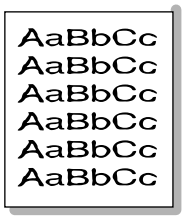	• If characters are improperly formed, producing hollow images, the paper stock may be too slick. Try a different paper. See "Paper Specifications" on page A.2. • If characters are improperly formed, producing a wavy effect, the scanner unit may need service. Check to see if it also occurs on a demo page by pressing the **Demo** button on the control panel when the printer is ready. If you need service, contact a service representative.
Page skew 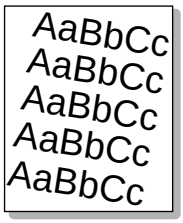	• Check the paper type and quality. See "Paper Specifications" on page A.2. • Make sure that the paper or other media is loaded correctly and the guides are not too tight or too loose against the paper stack.

Problem	Solution
Curl or wave 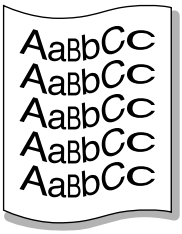	• Check the paper type and quality. Both high temperature and humidity will cause paper curl. See "Paper Specifications" on page A.2. • Turn over the stack of paper in the paper tray. Also try rotating the paper 180° in the paper tray. • Open the rear output tray and try printing to the face up output tray.
Wrinkles or creases 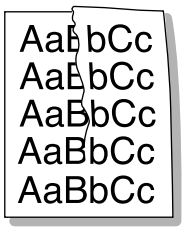	• Make sure that paper is loaded properly. • Check the paper type and quality. See "Paper Specifications" on page A.2. • Open the rear output tray and try printing to the face up output tray. • Turn over the stack of paper in the paper tray. Also try rotating the paper 180° in the tray.
Back of printouts dirty 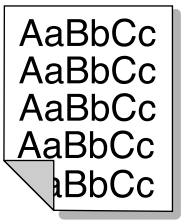	• The transfer roller may be dirty. See "Cleaning the Inside" on page 6.4. • Check if the toner is leaking. Clean inside the printer.
Black pages 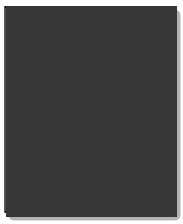	• The toner cartridge may not be installed properly. Remove the cartridge and reinsert it. • The toner cartridge may be defective and need replacing. Install a new toner cartridge. • The printer may require repairs. Contact a service representative.

Problem	Solution
Loose toner 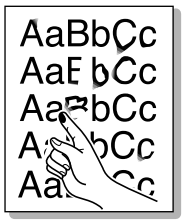	• Clean the inside of the printer. • Check the paper type and quality. See "Paper Specifications" on page A.2. • Try installing a new toner cartridge. • If the problem persists, the printer may require repairs. Contact a service representative.
Character Voids 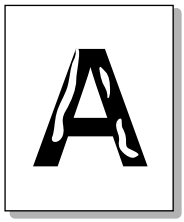	Character voids are white areas within the parts of characters that should be solid black: • If you are using transparencies when you experience this problem, try another type of transparency. (Because of the composition of transparency media, some character voids are normal.) • You may be printing on the wrong surface of the paper. Remove the paper and turn it around. • The paper may not meet paper specifications. See "Paper Specifications" on page A.2.
Horizontal stripes 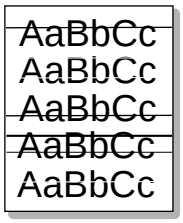	If horizontally aligned black streaks or smears appear: • The toner cartridge may be installed improperly. Remove the cartridge and reinsert it. • The toner cartridge may be defective. Install a new toner cartridge. • If the problem persists, the printer may require repairs. Contact a service representative.

Troubleshooting Error Messages

When the printer detects an error, the control panel indicator lights will indicate error messages. Find the light pattern below that matches the printer light pattern and follow the solutions to clear the error.

Printer Light Patterns

Light status legend

symbol for "light off"

symbol for "light on"

symbol for "light blinking"

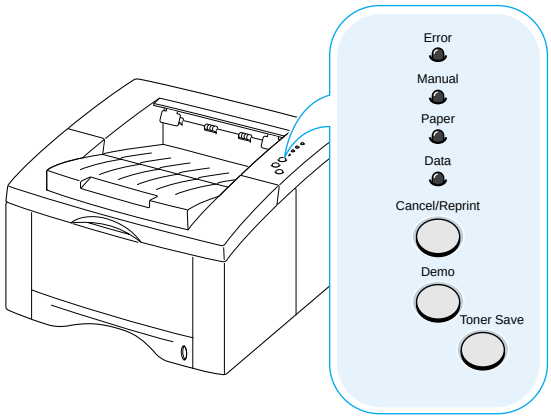

Error
Manual
Paper
Data

Power off

- Check the power cord and the power switch if your printer does not generate a response.
- Make sure that the printer is powered with the specified AC voltage.

Error
Manual
Paper
Data

Paper out

The printer is out of paper in the paper tray. The **Paper** light blinks until paper is added.

- Loading paper into the tray will cancel this message and allow you to continue with the print job.

Paper out in the manual feed mode

While printing in the manual feed mode, the printer is out of paper in the Manual Tray.

- Load the correct paper into the Manual Tray and press the **Demo** button on the control panel to print each page.

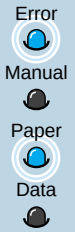

Paper jam

Paper is jammed inside the printer.

- Clear the paper jam. See "Clearing Paper Jams" on page 7.6.

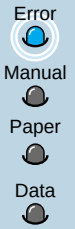

Door open, or no toner cartridge

The printer top cover may be opened or the toner cartridge is not installed.

- Check that the printer top cover door and rear door (face-up output tray) are closed properly.
- Make sure that the toner cartridge is correctly installed in the printer.

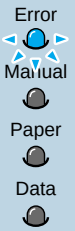

Memory out

The printer memory ran out of memory in the middle of a print job. The page being printed may have been too complex for the memory capacity of the printer. Press the **Cancel/Reprint** button to cancel the current job.

- Try to free some printer memory by removing any unnecessary fonts, macros, or any data currently in printer memory.
- For a temporary solution, simplify the image or print at a lower resolution.

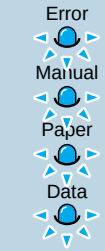

LSU error

- Reset the printer by briefly turning the printer off and back on again.
- If the error persists, contact the service representative.

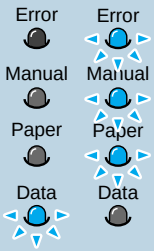

Engine Over Heat error

- Reset the printer by briefly turning the printer off and back on again.
- If the error persists, contact the service representative.

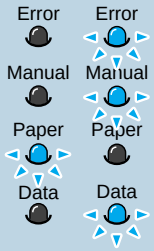

System error(No Heat error)

- Reset the printer by briefly turning the printer off and back on again.
- If the error persists, contact the service representative.

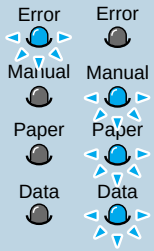

Open Fuser error

- Reset the printer by briefly turning the printer off and back on again.
- If the error persists, contact the service representative.

Common Windows Problems

Problem	Possible Cause and Solution
"File in Use" message appears during installation.	Quit all software applications. Remove all software from the StartUp Group, then restart Windows. Reinstall the printer driver.
"Error Writing to LPTx" message appears.	• Make sure that the cables are connected correctly, the printer is on, and the **Data** light on the control panel is on. • If bi-directional communication is not turned on in the driver, it will also cause this message. • From the **Start** menu, select **Settings**, then **Printers**. Right-click on the **Samsung ML-1440 Series** printer icon and select **Properties**. From the **Details** tab, click on **Port Settings**. Remove check from **Check Port State before Printing** box and click **OK**. From **Spool Settings**, select **Print Directly to Printer** and click **OK**. Try printing again.
"General Protection Fault", "Exception OE", "Spool32", or "Illegal Operation" messages appears.	Close all other applications, reboot Windows, and try printing again.

Note: Refer to Microsoft Windows 9x, Me, NT 4.0, 2000 or XP documentation that came with your PC for further information on Windows error messages.

Common Macintosh Problems

Problems in the Chooser

Problem	Possible Cause and Solution
The printer driver icon does not appear in the **Chooser**.	Software is not installed correctly. • The LaserWriter driver should be present as a part of the Macintosh OS. Make sure that the LaserWriter driver is in the **Extensions** folder within the **Systems** folder. If not, install the LaserWriter driver component from the Macintosh OS CD. • Make sure that you are using a high-quality cable. • Make sure that the printer is on the correct network. Select **Network** or **AppleTalk Control Panel** from **Control Panels** in the **Apple** menu and then choose the correct network.

Printing Errors

Problem	Possible Cause and Solution
You cannot use the computer while the printer is printing.	Background Printing has not been selected. • For LaserWriter 8.3, turn **Background Printing** on in the **Chooser**. Status messages will now be redirected to the **Print Monitor** allowing you to continue working while the computer is processing data to be sent to the printer. • For LaserWriter 8.4 or higher, turn **Background Printing** on at the Print dialog box.

Appendix

This appendix provides information on the following topics:

- ♦ Printer Specifications
- ♦ Paper Specifications
- ♦ Using Your Printer with Macintosh
- ♦ Linux Driver Installation
- ♦ Using Paper Tray 2 (Option)

Printer Specifications

Item	Specification and Description
Print Speed	14 PPM (A4), 15 PPM (Letter)
Resolution	True 600 x 600 dpi
First Printing Time	Less than 15 seconds
WarmUp Time	Less than 40 seconds
Power Rating	AC 100 ~ 127 V (USA, Canada) / 220 ~ 240 V (Others), 50 / 60 Hz
Power Consumption	350 W average during operation / Less than 12 W in power-save mode
Acoustic Noise	Stand by: Less than 35 dB; Operating: Less than 48 dB
Toner Supply	Single cartridge
Toner Cartridge Life	6,000 pages (for starter, 3,000 pages), 5% area coverage
Duty Cycle	Monthly: 12,000 pages maximum
Weight	11.2 Kg / 24.7 lb.
Package Weight	Paper: 1.7 Kg Plastic: 0.33 Kg
External Dimensions	361 (W) x 409 (D) x 247 (H) mm (without options)
Operating Environment	Temperature:10 ~ 32 °C / 50 ~ 90 °F; Humidity: 20 ~ 80 % RH
Emulation	SPL
Memory(RAM)	Standard: 8MB (Not Expandable)
Fonts	1 bitmap, 45 scalable
Interface Switching	Automatic (Parallel, USB)
Interface	• 14PPM (A4) Bidirectional Parallel Standard - Modes supported: Compatible, Nibble, Byte, ECP • USB Interface Standard - USB 1.1 compliant - 12Mbps 1 port

Paper Specifications

Overview

This printer accepts a variety of media, such as cut-sheet paper (including up to 100 % recycled fiber content paper), envelopes, labels, transparencies and custom-size paper. Properties such as weight, composition, grain and moisture content are important factors affecting printer performance and output quality. Paper that does not meet the guidelines outlined in this manual can cause the following problems:

- Poor print quality
- Increased paper jams
- Premature wear on the printer, requiring repairs.

Notes:

- Some paper may meet all of the guidelines in this manual and still not produce satisfactory results. This might be the result of improper handling, unacceptable temperature and humidity levels, or other variables over which Samsung has no control.
- Before purchasing large quantities of paper, make sure that the paper meets the requirements specified in this user guide. Always test paper before buying large quantities.

CAUTION: Using paper that does not meet that stated specifications may cause problems for the printer, requiring repairs. Repairs made necessary by the use of paper not specified in this manual are not covered by the Samsung warranty or service agreements.

Supported Sizes of Paper

Tray 1	Dimensions[a]	Weight	Capacity[b]
Letter	8.5 X 11 in. (216 X 279 mm)	16 to 28 lb Bond (60 to 105 g/m²)	270 sheets of 20 lb Bond (75 g/m²) paper
A4	210 X 297 mm (8.3 X 11.7 in.)		
Executive	7.25 X 10.5 in. (191 X 267 mm)		
Legal	8.5 X 14 in. (216 X 356 mm)		
B5 (JIS)	182 X 257 mm (7.2 X 10 in.)		
Folio	216 X 330 mm (8.5 X 13 in.)		
A5	148 X 210 mm		
A6	105 X 148 mm		

Optional Tray 2	Dimensions[a]	Weight	Capacity[b]
Letter	8.5 X 11 in. (216 X 279 mm)	16 to 28 lb Bond (60 to 105 g/m²)	550 sheets of 20 lb Bond (75 g/m²) paper
A4	210 X 297 mm (8.3 X 11.7 in.)		
Executive	7.3 X 10.5 in. (191 X 267 mm)		
Legal	8.5 X 14 in. (216 X 356 mm)		
B5 (JIS)	182 X 257 mm (7.2 X 10 in.)		
Folio	216 X 330 mm (8.5 X 13 in.)		
A5	148 X 210 mm		

Manual Tray	Dimensions[a]	Weight	Capacity[b]
Minimum Size (custom)	98 X 148 mm (3.9 X 5.83 in.)	60 to 163 g/m² Bond (16 to 43 lb)	1 sheets of paper
Maximum Size (custom)	216 X 356 mm (8.5 X 14 in.)		
Transparency	Same minimum and maximum paper sizes as listed above.	Thickness: .10 X .14 mm (0.0039 X 0.0055 in.)	
Labels[c]		Thickness: .10 X .14 mm (0.0039 X 0.0055 in.)	
Envelopes		up to 90 g/m² (16-24 lb)	

a. The printer supports a wide range of media sizes. See "Printing on Card Stock or Custom-Sized Media" on page 4.15.

b. Capacity may vary depending on media weight and thickness, and environmental conditions.

c. Smoothness - 100 to 250 (Sheffield)

Note: You may experience some paper jams when using any media with a length of less than 148 mm (5.83 in.). For optimum performance, make sure you are storing and handling the paper correctly. Please refer to "Printer and Paper Storage Environment" on page A.6.

Guidelines for Using Paper

For best results, use conventional 90 g/m^2 (24 lb) paper. Make sure the paper is of good quality, and free of cuts, nicks, tears, spots, loose particles, dust, wrinkles, voids, and curled or bent edges.

If you are unsure of what type of paper you are loading (such as bond or recycled), check the label on the package of the paper.

The following problems with paper can cause print quality deviations, jamming, or even damage to the printer.

Symptom	Problem with Paper	Solution
Poor print quality or toner adhesion Problems with feeding	Too moist, too rough, too smooth, or embossed; faulty paper lot	Try another kind of paper, between 100 ~ 250 Sheffield, 4 ~ 5 % moisture content.
Dropout, jamming, curl	Stored improperly	Store paper flat in its moisture-proof wrapping.
Increased gray background shading /printer wear	Too heavy	Use lighter paper, open the rear output tray.
Excessive curl problems with feeding	Too moist, wrong grain direction or short-grain construction	• Open the rear output tray. • Use long-grain paper.
Jamming, damage to printer	Cutouts or perforations	Do not use paper with cutouts or perforations.
Problems with feeding	Ragged edges	Use good quality paper

Notes:

- Do not use letterhead paper that is printed with low-temperature inks, such as those used in some types of thermography.
- Do not use raised or embossed letterhead.
- The printer uses heat and pressure to fuse toner to the paper. Make sure that any colored paper or preprinted forms use inks that are compatible with this fusing temperature (200 °C or 392 °F for 0.1 second).

Paper Specifications

Category	Specifications
Acid Content	5.5 ~ 8.0 pH
Caliper	.094 ~ .18 mm (3.0 ~ 7.0 mils)
Curl in Ream	Flat within 5 mm (.02 in.)
Cut Edge Conditions	Cut with sharp blades with no visible fray.
Fusing Compatibility	Must not scorch, melt, offset, or release hazardous emissions when heated to 200 °C (392 °F) for .1 second.
Grain	Long Grain
Moisture Content	4 % ~ 6 % by weight
Smoothness	100 ~ 250 Sheffield

Paper Output Capacity

Output Tray	Capacity
Top output (Face-down) tray	250 sheets of 20 lb bond (75 g/m^2) paper
Rear output (Face-up) tray	100 sheets of 20 lb bond (75 g/m^2) paper

Printer and Paper Storage Environment

Ideally, the printer and paper storage environment should be at or near room temperature, and not too dry or humid. Remember that paper absorbs and loses moisture rapidly.

Heat works with humidity to damage paper. Heat causes the moisture in paper to evaporate, while cold causes it to condense on the sheets. Heating systems and air conditioners remove most of the humidity from a room. As paper is opened and used, it loses moisture, causing streaks and smudging. Humid weather or water coolers can cause the humidity to increase in a room. As paper is opened and used it absorbs any excess moisture, causing light print and dropouts. Also, as paper loses and gains moisture it can distort. This can cause paper jams.

As a result, paper storage and handling are as important as the paper-making process itself. Paper storage environmental conditions directly affect the feed operation.

Care should be taken not to purchase more paper than can be easily used in a short time (about 3 months). Paper stored for long periods may experience heat and moisture extremes, which can cause damage. Planning is important to prevent damage to a large supply of paper.

Unopened paper in sealed reams can remain stable for several months before use. Opened packages of paper have more potential for environment damage, especially if they are not wrapped with a moisture-proof barrier.

The paper storage environment should be properly maintained to ensure optimum printer performance. The required condition is 20 ° to 24 °C (68° to 75 °F), with a relative humidity of 45 % to 55 %. The following guidelines should be helpful when evaluating the paper's storage environment:

- Paper should be stored at or near room temperature.
- The air should not be too dry or too humid (due to the hygroscopic properties of paper).
- The best way to store an opened ream of paper is to rewrap it tightly in its moisture-proof wrapping. If the printer environment is subject to extremes, unwrap only the amount of paper to be used during the day's operation to prevent unwanted moisture changes.

Envelopes

Envelope construction is critical. Envelope fold lines can vary considerably, not only between manufacturers, but also within a box from the same manufacturer. Successful printing on envelopes depends upon the quality of the envelopes. When selecting envelopes, consider the following components:

- **Weight:** The weight of the envelope paper should not exceed 90 g/m^2 (24 lb) or jamming may occur.
- **Construction:** Prior to printing, envelopes should lie flat with less than 6 mm (0.25 in.) curl, and should not contain air.
- **Condition:** Envelopes should not be wrinkled, nicked, or otherwise damaged.
- **Temperature:** You should use envelopes that are compatible with the heat and pressure of the printer.
- **Size:** You should only use envelopes within the following size ranges.

	Minimum	Maximum
Manual Tray	98 X 148 mm (3.9 X 5.83 in.)	216 X 356 mm (8.5 X 14 in.)
Optional Tray 2	148 X 210 mm (5.82 X 8.25 in.)	216 X 356 mm (8.5 X 14 in.)

Note: You may experience some paper jams when using any media with a length less than 148 mm (5.83 in.). This may be caused by paper that has been affected by environmental conditions. For optimum performance, make sure you are storing and handling the paper correctly. Please refer to “Printer and Paper Storage Environment” on page A.6.

Envelopes with Double Side Seams

Double side-seams construction has vertical seams at both ends of the envelope rather than diagonal seams. This style may be more likely to wrinkle. Be sure the seam extends all the way to the corner of the envelope as illustrated below.

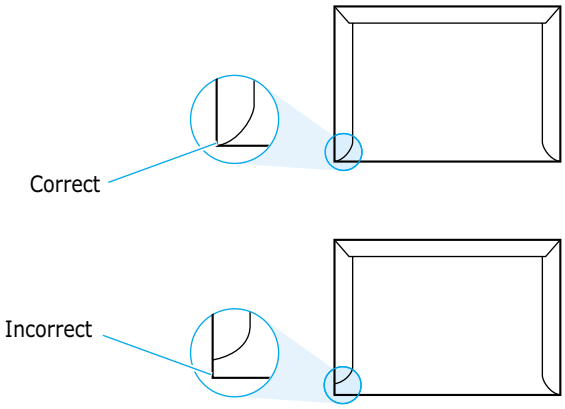

Envelopes with Adhesive Strips or Flaps

Envelopes with a peel-off adhesive strip or with more than one flap that folds over to seal must use adhesives compatible with the heat and pressure in the printer. The extra flaps and strips might cause wrinkling, creasing, or even jams and may even damage the fuser.

Envelope Margins

The following gives typical address margins for a commercial #10 or DL envelope.

Type of Address	Minimum	Maximum
Return address	15 mm (0.6 in.)	51 mm (2 in.)
Delivery address	51 mm (2 in.)	89 mm (3.5 in.)

Notes:

- For best print quality, position margins no closer than 15 mm (0.6 in.) from the edges of the envelope.
- Avoid printing over the area where the envelope's seams meet.

Envelope Storage

Proper storage of envelopes helps contribute to print quality. Envelopes should be stored flat. If air is trapped in an envelope, creating an air bubble, then the envelope may wrinkle during printing. See "Printing on Envelopes" on page 4.9.

Labels

CAUTIONS:

- To avoid damaging the printer, use only labels recommended for laser printers.
- To prevent serious jams, always use the Manual Tray to print labels and always use the rear output tray.
- Never print on the same sheet of labels more than once and never print on a partial sheet of labels.

When selecting labels, consider the quality of each component:

- **Adhesives:** The adhesive material should be stable at 200 °C (392 °F), the printer's fusing temperature.
- **Arrangement:** Only use labels with no exposed backing between them. Labels can peel off sheets with spaces between the labels, causing serious jams.
- **Curl:** Prior to printing, labels must lie flat with no more than 16 mm (.61 in.) of curl in any direction.
- **Condition:** Do not use labels with wrinkles, bubbles, or other indications of separation.

See "Printing on Labels" on page 4.12.

Transparencies

Transparencies used in the printer must be able to withstand 200 °C (392 °F), the printer's fusing temperature.

CAUTION: To avoid damaging the printer, use only transparencies recommended for use in laser printers.

See "Printing on Transparencies" on page 4.13.

Using Your Printer with Macintosh

Your printer supports Macintosh systems with a built-in USB interface. When you print a file from Macintosh, you can use the SPL driver to support your printer's major printing features.

System Requirements

To use your ML-1440 printer and its software with a Macintosh, your system should have:

Macintosh Hardware Requirement:

- One of the following Macintosh models:
  -Power Macintosh series (for network connection only)
  -Power Macintosh G3, G4
  -iMac series
  -iBook series
  -Power Book series

- USB interface

Macintosh System Requirement:

System 8.6 or later

Installing Software for Macintosh

Connecting to Macintosh

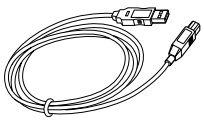

You can connect the printer to your Macintosh using the USB interface.

USB cable is not provided in your printer. Purchase a certified USB 1.0 or 1.1 compliant cable.

1 Turn off the printer and computer.

2 Hold the USB cable so the icon faces up and connect it to your printer's USB connector.

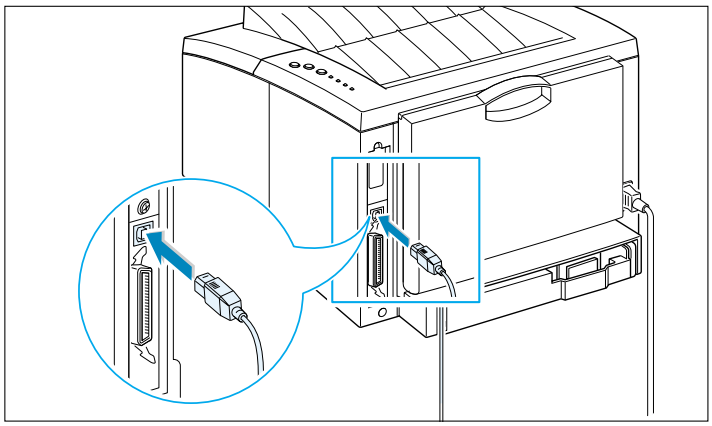

3 Connect the other end of the cable to an available USB port on your Macintosh computer. If you have any connecting problems, please refer to your computer documentation.

Note: If you are using a USB hub, connect the printer's cable to the first tier of the hub or the printer may malfunction. If the printer doesn't work with the hub, connect it directly to the USB port.

Installing Software

1 Turn on your computer and printer.

2 Insert the CD-ROM which came with your printer into the CD-ROM drive.

3 Double-click **ML-1440** on your Macintosh desktop.

4 Click the **Samsung Laser Printer Installer** icon next to the each language to select the correct one.
If you want to see the User Guide, click User's Guide.

5 Click **Continue**, then click **Continue**.

6 The Samsung Laser Printer Installer opens. Select installation type. The installer provides two options for software installation:

- **Easy Install** (recommended method): This option loads installs SPL driver.
- **Custom Install** : This option allows you to choose which components will be installed.
  If you want to use the SPL driver, you must install it.
  If you want to use Adobe Acrobat Reader program, you must install it.

7 Click **Install**.

8 After installation is complete, click **Quit**.

Choosing SPL Driver

1 From the **Apple** menu, select **Chooser**.

2 From the left pane of the Chooser window, click **SAMSUNG SPL**. Then the ML-1450 will appear in the right pane of the Chooser window.

3 Click the ML-1440, and close the Chooser window.

4 You see the message box indicating that you have changed your current printer. Click **OK**.

5 A ML-1440 printer icon will be created on your desktop.

Printing from a Macintosh

When you print with a Macintosh, you need to check the printer software setting in each application you use. Follow these steps to print from a Macintosh:

1 Open a Macintosh application and select a file you want to print.

2 Open the **File** menu, and click **Page Setup** (**Document Setup** in some applications). You will see the Page Setup dialog box.

3 Choose your paper size, orientation, paper type and other options and click **OK**.

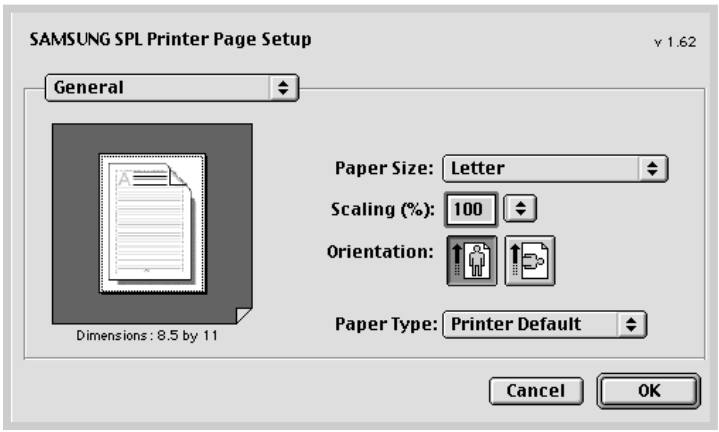

Choose **Watermark** if you want to add a watermark to each page in your document to emphasize its purpose or indicate how it should be handled. For details on the watermark option, see page 5.21.

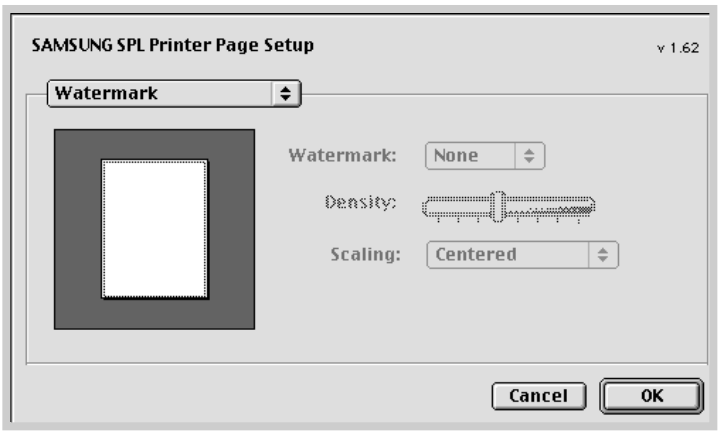

4 Now open the **File** menu and click **Print**. You see the main printer settings dialog box.

5 Choose the number of copies and indicate which pages you want to print. For advanced printing features, select the desired option. For details, see page A.15.

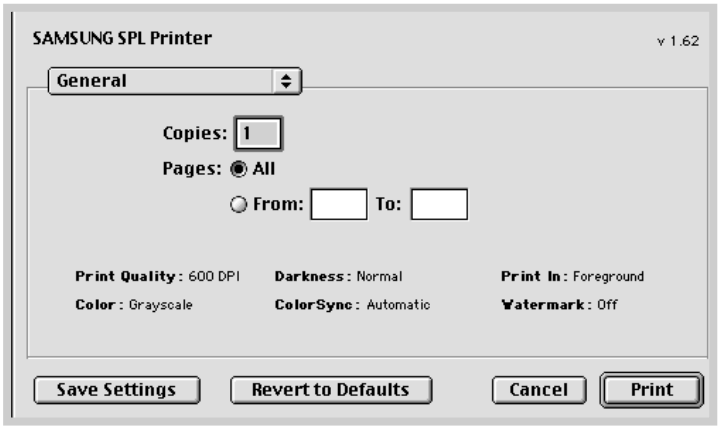

Select the desired option for advanced printing features.

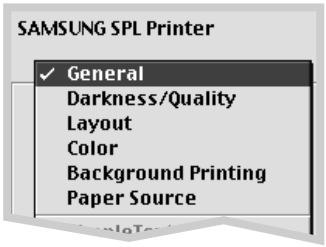

6 Click **Print** when you are finished checking your settings.

Advanced Printing

The Page Setup dialog box contains five categories of page setup properties. Listed below is the name of each property.
-Darkness/Quality
-Layout
-Color
-Background Printing
-Paper Source

Figures below display each property in the Page Setup dialog box.

Darkness/Quality

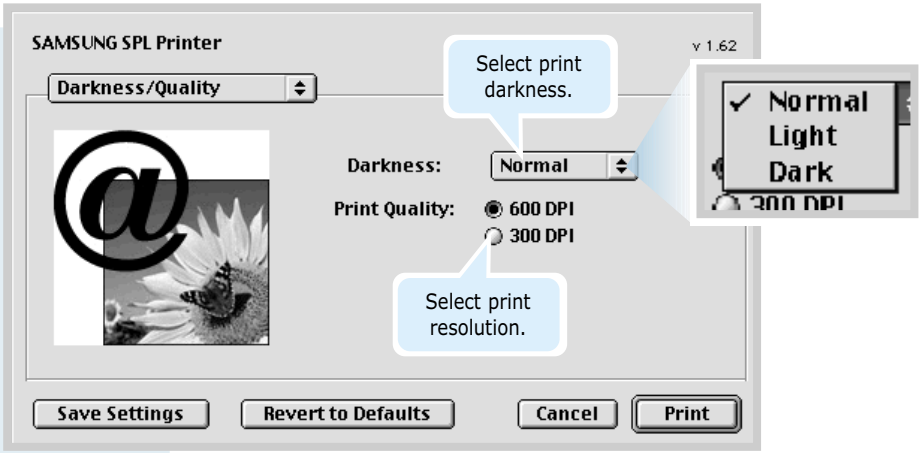

Layout

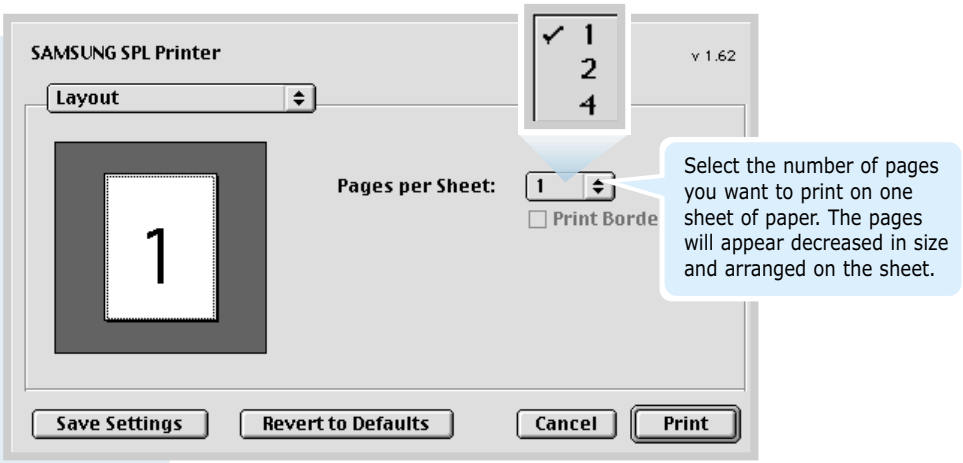

Color

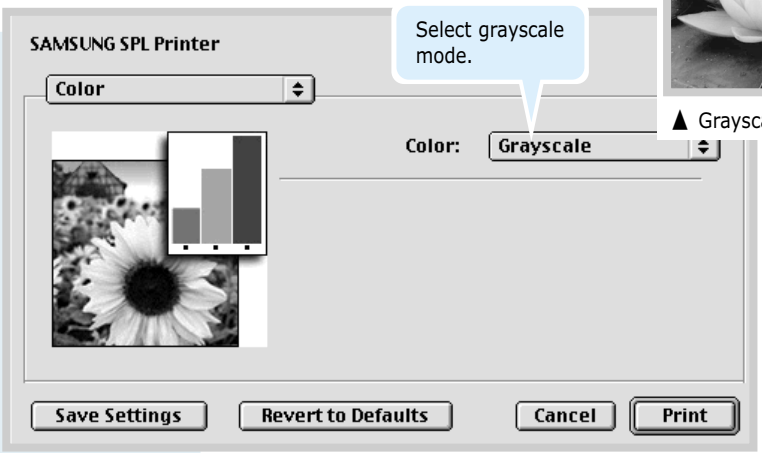

Select grayscale mode.

▲ Grayscale

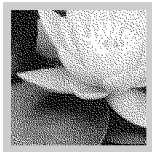

▲ Black&White

Background Printing

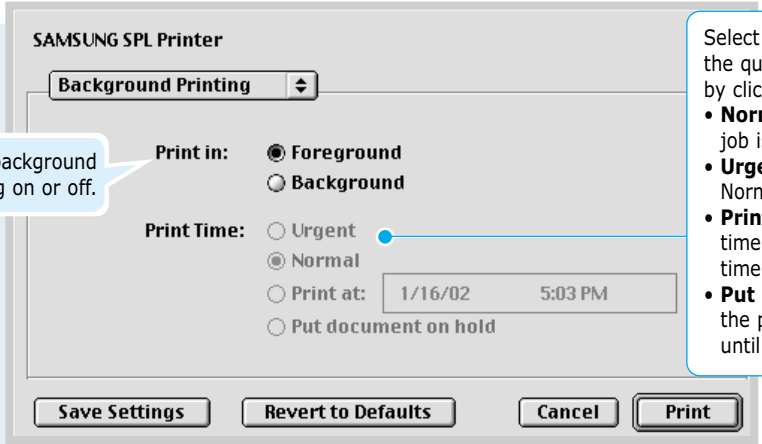

Turns background printing on or off.

Select a priority for your print job in the queue of jobs waiting to print, by clicking one of the following:

- **Normal** to print in the order the job is received.
- **Urgent** to print before any Normal priority job.
- **Print at:** to print at the specific time you enter in the day and time in the fields to the right.
- **Put document on hold** to hold the print job in the print queue until you are ready to release it.

Paper Source

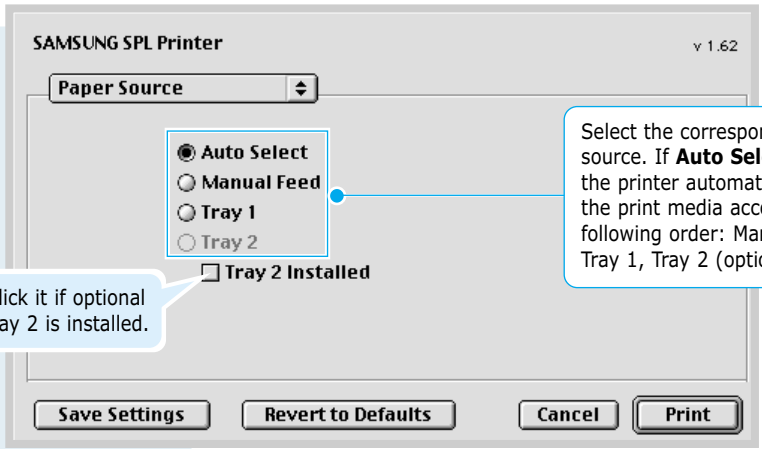

Select the corresponding paper source. If **Auto Select** is set, the printer automatically selects the print media according to the following order: Manual Feed, Tray 1, Tray 2 (option).

Click it if optional Tray 2 is installed.

Linux SPL Driver Installation

To use your printer in linux, you must update ghostscript package. Fortunately, our ghostscript package was made by RPM package manager. So, you can easily install and uninstall the package in linux versions that support RPM. But if your linux version doesn't support rpm package, you directly must install the source package in the driver CD. After you update your ghostscript package, you must configure your linux printing environment. For it, you must configure your printer filter.

Unfortunately, all linux versions are different from each other in their filter. So we didn't account filter configuration for all linux versions in here. Installation procedure for each linux version we support was descripted in below.

Configuration Setup Procedure

Directories

gs5.10 : ghostscript 5.10 version package.
gs5.10k : ghostscript 5.10 Korean Language version package.
gs5.50k : ghostscript 5.50 Korean Language version package.
gs5.50 : ghostscript 5.50 version package.
cups :ppd file for CUPS printing system.
redhat : setup script for Redhat Linux.
redhat71 : configuration file for Redhat 7.1 lpd-o-matric printing system.

Redhat 6.0 ~ 7.0 Linux

1. Transfer into super user mode.

2. Update your pre-installed ghostscript package.
   #rpm -q ghostscript (check version to install.)
   #cd/mnt/cdrom/linux/gs5.XX (**XX** is pre-installed ghostscript version.)
   #rpm -e --nodeps ghostscript (uninstall pre-installed ghostscript '--nodeps' option skips dependency check.)
   #rpm -ivh --nodeps gs5XX.rpm (install our ghostscript.)

3. Insert your printer driver CD-ROM to CD-ROM drive.

4 Mount your CD-ROM drive and run script file.
#mount -t iso9660 /dev/cdrom/mnt/cdrom
#cd /mnt/cdrom/linux/redhat/
#install.sh

5 Set up your printer driver.
a. Run **printtool** program.
#printtool
b. Click **Add** button and select the **proper printer type** and click **OK** button.
c. Set proper setting values in "Edit XXXXXXXX Entry" window and click **Select** button of Input Filter (XXXXXXXX is the printer type you select).
d. Add the needed printer driver for the emulation that your printer supports.
Select **SAMSUNG Printer SPL compatible** and click **OK** button. If you don't update ghostscript, this item is not visible.

6 Run lpr program to print your document or configure the printer setup of your application.
ex> **#lpr -Plp1 sample.ps** (**lp1** is the printer device name you install.)

Redjat 7.1 Linux

1 Transfer into super user mode.

2 Insert your printer driver CD-ROM to CD-ROM drive.

3 Mount your CD-ROM drive and copy the configuration file.
#mount -t iso9660 /dev/cdrom/mnt/cdrom
#cp /mnt/cdrom/linux/redhat71/sec-spl.foo/usr/share/printconf/foomatic/data

4 Update your pre-installed ghostscript package.
#rpm -q ghostscript (check version to install.)
#cd/mnt/cdrom/linux/gs5.XX (XX is pre-installed ghostscript '--nodeps' option skips dependency check.)
#rpm -ivh --nodeps gs5XX.rpm (install our ghostscript.)

5 Delete any previous content of the **printcap.local** file located in the **/etc directory** and copy only the below mentioned lines from the **printcap.sam** file located under the linux/Redhat71 directory of the installation CD.

SPL :
:if=usr/share/printconf/foomatic/lpdomatic:
:filter_options= --lprng $Z
/usr/share/printconf/foomatic/data/sec-spl.foo:

6 Run Printtool to add a new queue. The driver name will not be shown in the available driver list. Apply the following settings.

a. Queue Name : Say SPL
b. Alias Name : Say SPL
c. Queue Type : /dev/lp0 (If you want to print using lpt1:) Or
/dev/usb/lp0 (If you want to print using USB)
d. Printer driver : Text Only Printer.

Save the queue and restart lpd. You will get a message that lpd restarted successfully.

Note: Redhat 7.1 changed 'printtool' to 'printconf', so install.sh in CD/linux/ redhat doesn't work any more. You can downgrade the printconf to the printtool of Redhat 7.0, or manually configure your printer setting by above description.
For detail documentations, refer to the following web site.
"http://www.linuxprinting.org/lpd-doc.html"

Mandrake 7.2 or Linux version that use CUPS printer manager

1 Transfer into super user mode.

2 Update your pre-installed ghostcsript package.
#rpm -q ghostscript (check version to install.)
#cd /mnt/cdrom/linux/gs5.XX (XX is pre-installed ghostscript version.)
#rpm -e --nodeps ghostscript (uninstall pre-installed ghostscript '--nodeps' option skips dependency check.)
#rpm -ivh --nodeps gs5XX.rpm (install our ghostscript.)

3 Copy PPD file to your mandrake linux.
 # cd/usr/mnt/cdrom/linux/cups/sec-spl.ppd /usr/share/cups/model/samsung <Enter>
 # cd/etc/init/d/cups restart <Enter>

4 Run **cupsWebAdmin**(accordingly, you can use qtcups or printtool.).
a. Select **Printer** menu.
b. Add **printer**.
c. Select **proper port** (maybe, parallel port)
d. Select your printer SPL as your printer filter PPD.
e. Configure printer (select proper DPI, paper size...).

SuSE Linux

1 Transfer into super user mode.

2 Update ghostscript package.

a. Uninstall(Erase) the pre-installed ghostscript package.
#rpm -e --nodeps gs_X11 (or gs_both)
#rpm -e --nodeps gs_lib

b. Install the ghostscript package in Driver CD.
#rpm -ivh --nodeps gs550.rpm

c. Modify font dirctory.
 # cd/usr/share/fonts
 # mkdir default
 # cd default
 # mkdir ghostscript
 # cp/usr/share/ghostscript/fonts/*/usr/share/fonts/default/ghostscript

3 Set up aps-filter.

a. **#/var/lib/apsfilter/SETUP**
b. Choose **ENTRY** and **DEVICE**.
c. Choose the **correct port** (ex. /dev/lp0).
d. Choose **PRINTER -> ENTRY -> FREEDEF -> YOUR**, and type qpdl as device name.
e. Choose the **resolution** (ex, 600).
f. Choose the correct values into **PAPER** (ex, A4) and **COLOR** (ex, mono).
e. Then choose **ADD**.

Linux USB Driver Configuration Procedure

You must follow this sequences in super user mode. Linux kernel 2.2.12 or later version only supports USB printer driver. If you run "uname -r", you'll see your linux kernel verion. And if your version is lower than the required version, you must patch or upgrade your linux kernel.
And then, you must make the device file for USB printer port by following command. If you want to know whether the device file already exists, check lp0 file in **/dev/usb** directory. If there is no file, you can make it by this method.
 # mknod/dev/usb/lp0 c 180 0

The following command detect your USB port and load the required module.
 # modprobe printer

But, you can either manually configure **/etc/conf.modules** (or **/etc/modules.conf** with 2.4-ready versions of modutils) to load the modules you require like this on boot time;
alias usb-controller usb-uhci (or "alias usb uhci ")
post-install usb-uhci (or "uhci" like above) modprobe printer
Finally, you must **modify/etc/printcap** file for using the port you configure.
For more details, please refer to the web site, "http://www.linux-usb.org".

Using Paper Tray 2 (Option)

You can increase the paper handling capacity of your printer by installing the optional Tray 2. The optional paper tray consists of two components; the **support unit** and **paper tray**.

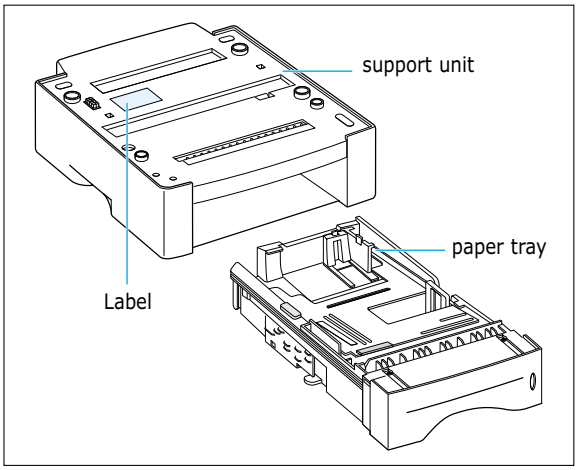

Note: Be sure you check the **label** before using the optional Tray 2. (For use with ML-1440 only)

1 Turn off the printer and unplug all cables from the printer.

2 Observe the location of the support unit's connector and tabs.

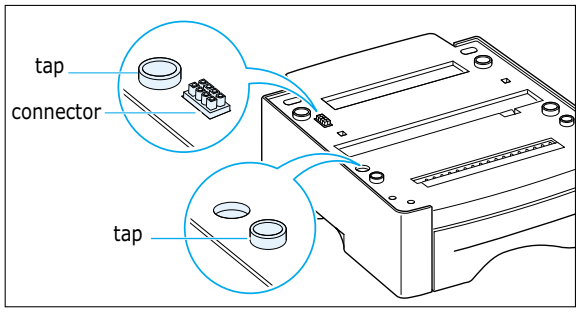

3 Align the printer with the support unit and lower it into place on the tabs and connector.

4 Load paper in Tray 2. For information on loading paper in the tray, see next page.

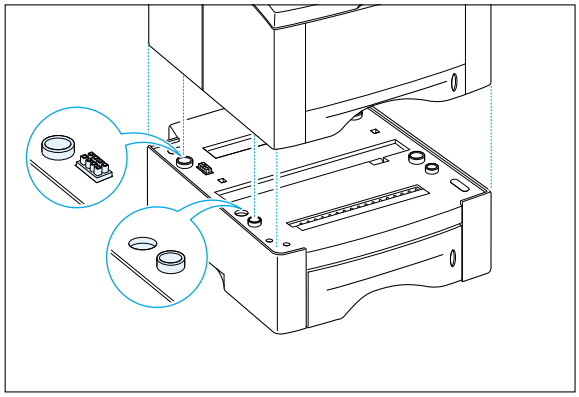

5 Reconnect the cables, then turn the printer on.

Note: To print from Tray 2, you must configure the printer driver from your application prior to printing. To access the printer driver, see page 5.2.

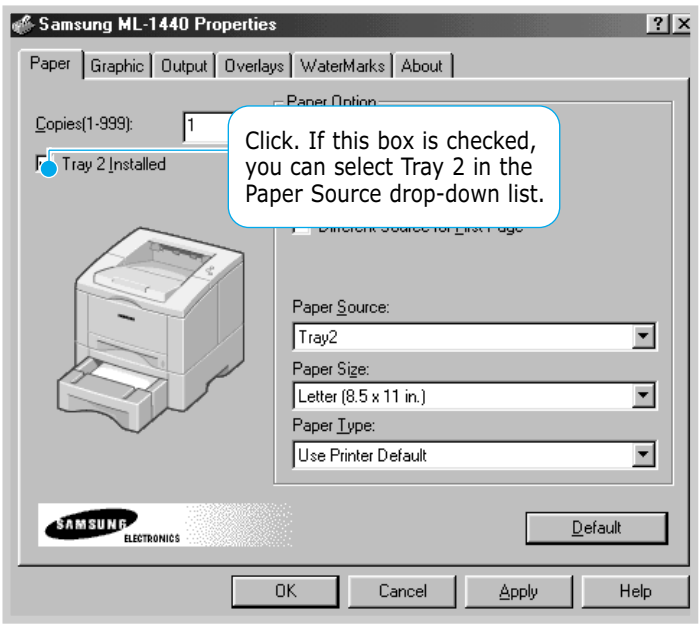

Load Paper

1 Pull the paper tray out of the printer.

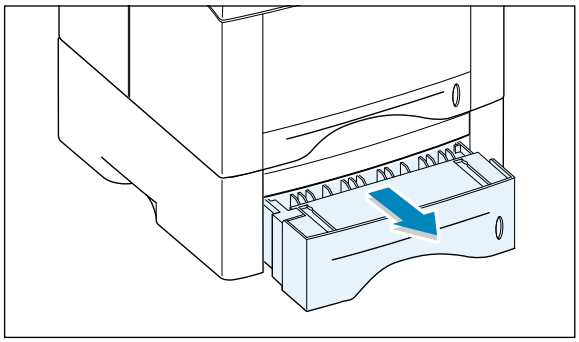

2 Push down on the metal paper lift plate to lock it in place.

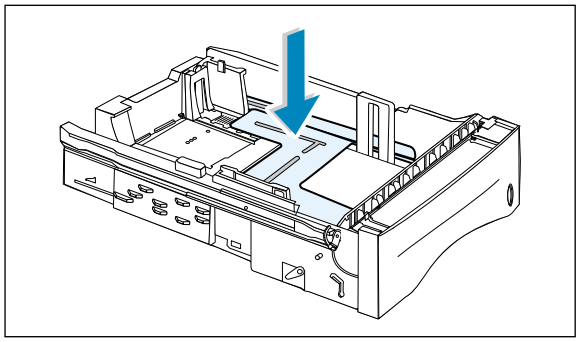

3 Load paper **with the print side facing down**.

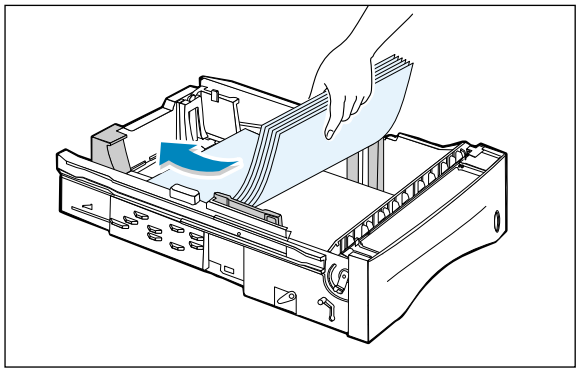

Make sure it is flat in the tray at all four corners.

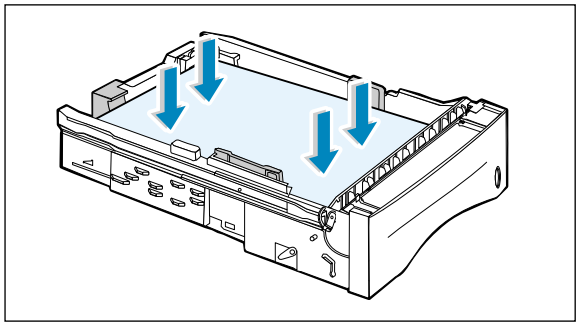

4 Slide the tray back into the printer.

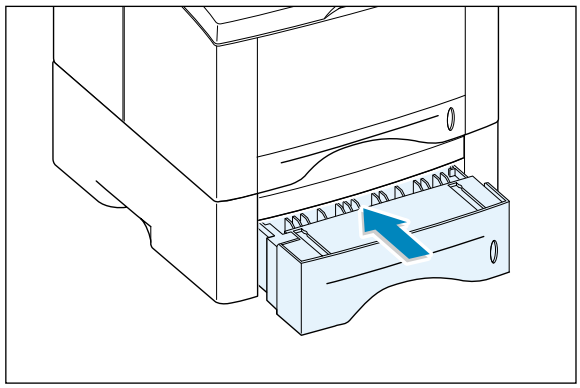

To Change Paper Size in Tray

1 For legal, folio or A4 paper, squeeze the release on the reverse side of the rear wall to adjust the tray length.

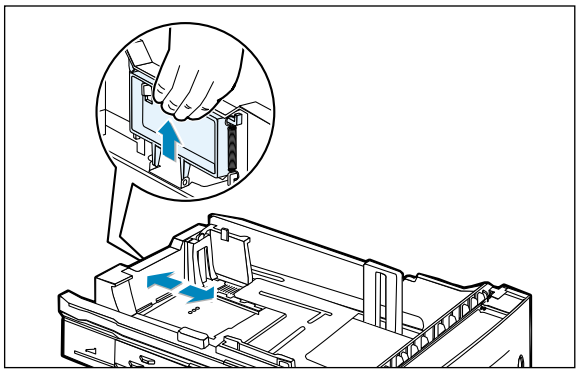

2 Adjust the side guide to lightly touch the print media. If necessary, adjust the rear side guide by pulling up on the tab and sliding the guide to the left.

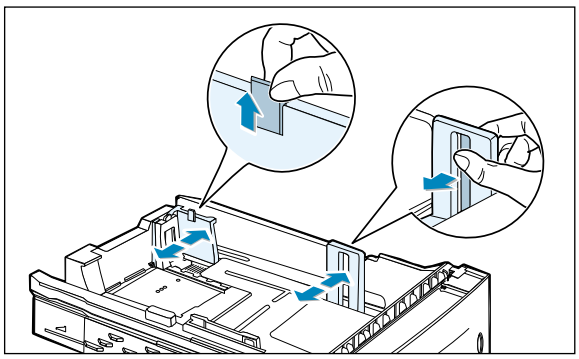

3 If necessary, Pinch the rear width guide and slide it forward until it lightly touches the print media.

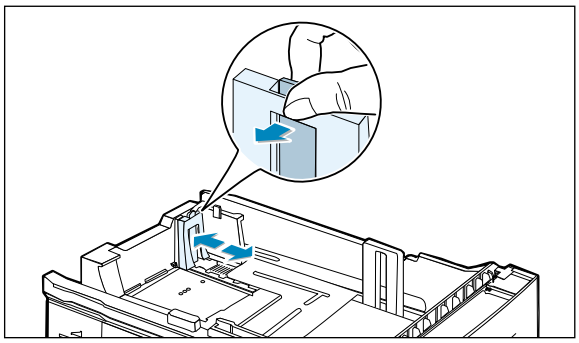

Notes:

- Do not push the width guide far enough to cause the media to warp.
- If you do not adjust the width guide, it may cause a paper jam.

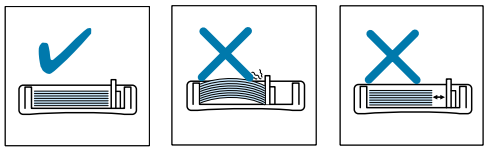

INDEX

Numeric

2-sided printing 5.7

A

auto tray, loading 2.5
all text to black 5.19

B

booklet printing 5.13

C

cancel, print job 5.5
Cancel/Reprint button 3.1
cardstock, print 4.15
clean, printer 6.4
cleaning sheet 6.5
components 1.3
control panel
  buttons 3.1
  lights 3.3
custom-sized media, print 4.15

D

darkness, setting 5.19
Data light 3.3
Demo button 3.2
demo page, print 2.9
dark text 5.19
different paper for the first page 5.28
driver
  access 5.1
  in Macintosh A.10
  install 2.11
  Linux driver A.17
  remove 2.14
  USB driver 2.16

E

envelopes, print 4.9
error messages 7.21

F

face-down tray 4.4
face-up tray 4.4
features 1.1
fitting to a selected paper size 5.12

G

graphic properties 5.18

H

heavy paper, print 4.11

I

install
  Linux driver A.17
  printer software, parallel cable 2.11
  printer software, USB cable 2.16
  toner cartridge 2.3
  tray 2 option A.23

J

jam see *paper jam*

L

labels, print 4.12
last page, printing 5.29
letterhead, print 4.14
Linux driver A.17
load, paper
  in the tray 1 2.5
  in the optional tray 2 A.24
  using the manual tray 4.7

M

Macintosh
  installing software A.10
  printing A.12
  system requirements A.10
manual duplexing 5.7
Manual light 3.4
manual tray
  loading paper 4.7
  paper source setting 5.3
multiple pages on one sheet, print 5.10

N

network printing 5.30
n-up printing 5.10

O

orientation 5.3
output tray, select 4.4
  rear 4.4
  top 4.4
overlay, print 5.24

P

paper
  acceptable size and capacities 4.2, A.2
  choose 4.1
  guidelines 4.3, A.4
  load 2.5, 4.6
  specifications A.2
  storage environment A.6
paper jam, clear 7.6
  input area 7.9
  inside the printer 7.10
  optional tray 2 7.12
  output area 7.6
  tips for avoiding paper jams 7.14
paper level indicator 4.6
Paper light 3.4
paper orientation, setting 5.3
paper out, indicator 7.21
paper source, setting 5.3
paper tray
  change paper size in tray 2.6
  load paper 2.4
paper type, setting 5.3
parallel, connection 2.8
poster, print 5.16
power, connection 2.8

P (continued)

power save mode 5.20
print media see *paper*
print quality problem, solving
  back of printouts dirty 7.19
  background scatter 7.18
  black pages 7.19
  character voids 7.20
  checklist 7.15
  curl or wave 7.19
  dropouts 7.16
  gray background 7.17
  horizontal stripes 7.20
  light or faded print 7.15
  loose toner 7.20
  misformed characters 7.18
  page skew 7.18
  Repetitive vertical defects 7.17
  toner smear 7.17
  toner specks 7.16
  vertical lines 7.16
  wrinkles or creases 7.19
printer light patterns 7.21
printer driver see *driver*
printer software, install 2.11
printing
  booklets 5.13
  cancel 5.5
  cleaning sheet 6.5
  demo page 2.9
  different paper for the first page 5.28
  fitting to a selected paper size 5.12
  from Macintosh A.12
  from Windows application 5.1
  general problems, solving 7.2
  help 5.5
  multiple pages on one sheet 5.10
  on a network 5.30
  on both sides of the paper 5.7
  poster 5.16
  quality problems, solving 7.15
  reprinting last page 5.29
  scaling document 5.11
  using page overlay 5.24
  watermarks 5.21
problem, solving
  common macinosh problems 7.25
  common windows problems 7.24
  error messages 7.21
  general 7.2
  paper jam 7.6
  print quality 7.15
  troubleshooting checklist 7.1

Q

quality, problems 7.15

R

read mode 3.3
rear output tray 4.4
remove, driver 2.14
reprint, last page 5.29
reprint when jam 5.20
resolution 5.18

S

scaling document 5.11
setup printer chapter 2
specifications
  paper A.2
  printer A.1
system error 7.22

T

tray 1, loading 2.5
tray 2 option, loading A.24
toner cartridge
  cleaning sheet 6.5
  install 2.3
  life expectancy 6.1
  recycle 6.1
  redistribute toner 6.2
  save toner 5.6, 6.1
  storage 6.1
Toner Save button 3.2. 5.6
top output tray 4.4
transparency, print 4.13
troubleshooting see *problem, solving*

U

unpacking 2.1
USB cable 2.16

W

watermark, print 5.21

Home

Visit us at:
http://www.samsungprinter.com