CHAPTER 7

# Problem Solving

This chapter gives helpful information for what to do if you encounter a printer error. It provides information on the following topics:

- Troubleshooting Checklist
- Solving General Printing Problems
- Printing Special Pages
- Clearing Paper Jams
- Solving Print Quality Problems
- Troubleshooting Error Messages
- Common Windows Problems
- Common Macintosh Problems
- Troubleshooting PS Errors

# Troubleshooting Checklist

If the printer is not working properly, complete the following checklist in order. If the printer does not pass a step, follow the corresponding troubleshooting suggestions.

| Check | Solution |
|---|---|
| Make sure that the **Data** light on the control panel is on. | • If no lights are on, check the power cord connection. Check the power switch. Check the power source by plugging into another outlet.<br>• If other lights are on, go to "Troubleshooting Error Messages" on page 7.22. |
| Press the **Demo** button to print a demo page to verify that the printer is feeding paper correctly. See page 7.6. | • If a demo page does not print, check the paper supply in the paper tray.<br>• If the paper jams in the printer, go to " Clearing Paper Jams" on page 7.7.<br>• If the **Error** indicator light is illuminated on the control panel, go to "Troubleshooting Error Messages" on page 7.22. |
| Check the demo page to see if it is printed correctly. | If there is a print quality problem, go to "Solving Print Quality Problems" on page 7.16. |
| Print a short document from a software application to verify that the computer and printer are connected and are communicating correctly. | • If the page does not print, check the cable connection between the printer and computer.<br>• Check the print queue or print spooler (print monitor in Mac) to see if the printer has been paused.<br>• Check the software application to make sure you are using the proper printer driver and communication port. If the page is interrupted during printing, go to "Solving General Printing Problems" on page 7.2. |
| If completing the checklist did not diagnose the problem with the printer, check the following troubleshooting sections. | • "Solving General Printing Problems" on page 7.2.<br>• "Troubleshooting Error Messages" on page 7.22.<br>• "Common Windows Problems" on page 7.25.<br>• "Common Macintosh Problems" on page 7.26.<br>• "Troubleshooting PS Errors" on page 7.28. |

# Solving General Printing Problems

If you have any problems with the operation of your ML-1450 series printer, refer to the table for suggested solutions.

| Problem | Possible Cause | Solution |
|---|---|---|
| The printer does not print. | The printer is not receiving power. | If no lights are on, check the power cord connections. Check the power switch and the power source. |
| | Your printer is not selected as the default printer. | Select **Samsung ML-1450 Series** or **Samsung ML-1450 Series PS** as your default printer. |
| | Check the printer for the following: | • The printer cover is not closed.<br>• Paper is jammed.<br>• No paper is loaded.<br>• Toner cartridge is not installed.<br>• Printer system error occurs. Contact a service representative. |
| | The printer may be in manual feed mode and out of paper. (The **Manual** and the **Data** lights are blinking.) | Add paper to the Multi-Purpose tray, and press the **Demo** button on the printer's control panel. |
| | The connection cable between the computer and the printer is not connected properly. | Disconnect the printer cable and reconnect it. |
| | The connection cable between the computer and the printer is defective. | If possible, attach the cable to another computer that is working properly and print a job. You may also try using a different printer cable. |
| | The port setting is incorrect. | Check the Windows printer setting to make sure that the print job is sent to the correct port (for example, LPT1). If the computer has more than one port, make sure the printer is attached to the correct one. |

| Problem | Possible Cause | Solution |
|---|---|---|
| The printer does not print. (continued) | The printer may be configured incorrectly. | Check the printer properties to make sure that all print settings are correct. |
| | The printer driver may be incorrectly installed. | Uninstall the printer driver, then reinstall the printer driver. Try printing a demo page. |
| | The printer is malfunctioning. | Check the lights on the control panel to determine if the printer is indicating a system error. |
| Printer selects media from the wrong paper source. | The paper source selection in the printer properties may be incorrect. | For many software applications the paper source selection is found under the **Paper** tab within the printer properties. Select the correct paper source. |
| Paper does not feed into the printer. | Paper has not been loaded correctly. | Remove paper from the paper tray and reload it correctly. |
| | There is too much paper in the paper tray. | Remove excess paper from the tray . |
| | The paper is too thick. | Use only paper that meets the specifications required by the printer. |
| Print job is extremely slow. | The job may be very complex.<br><br>The maximum speed of 14 pages per minute cannot be exceeded even when more memory is added. | Reduce the complexity of the page or try adjusting the print quality settings. If this problem occurs frequently, add memory to the printer. |
| | If using Windows 9x/Me, the Spooling Setting may be set incorrectly. | From the **Start** menu, choose **Settings** and **Printers**. Right-click the Samsung ML-1450 series printer icon, choose **Properties**, click the **Details** tab, and then choose the **Spool Settings** button. Select the desired spool setting from the available choices. |

| Problem | Possible Cause | Solution |
|---|---|---|
| Print job is extremely slow. (continued) | The computer may have insufficient random-access memory (RAM). | Install more random-access memory (RAM) in your computer. See "Memory and PostScript SIMMs" on page F.2. |
| Half of the page is blank. | The page layout is too complex. | Simplify the page layout and remove any unnecessary graphics from the document, if possible. Install more memory. See "Memory and PostScript SIMMs" on page F.2. |
| | The page orientation setting may be incorrect. | Change the page orientation in your application. |
| | The paper size and the paper size settings do not match. | Make sure that the paper size in the print settings matches the paper in the paper tray. |
| The paper keeps jamming. | There is too much paper in the paper tray. | Remove excess paper from the tray. If printing special media, use the Multi-Purpose Tray. |
| | An incorrect type of paper is being used. | Use only paper that meets the specifications required by the printer. |
| | An incorrect output method is being used. | Media such as thick paper should not be printed using the standard face-down stacker. Use the rear face-up output tray instead. |
| | There may be debris inside the machine. | Open the top cover and remove the debris. |

| Problem | Possible Cause | Solution |
|---|---|---|
| The printer prints, but the text is wrong, garbled, or incomplete. | The printer cable is loose or defective. | Disconnect the printer cable and reconnect it. Try a print job that you know works. If possible, attach the cable and printer to another computer and try a print job that you know works. Finally, try a new printer cable. |
| | The wrong printer driver was selected. | Check the application's printer selection menu to make sure that your printer is selected. |
| | The software application is malfunctioning. | Try printing a job from another application. |
| | The operating system is malfunctioning. | If printing from Windows (any version), exit to a Dos prompt and verify functionality with the following command: At a **C:** prompt, type **Dir LPT1**, then press **Enter**. (This assumes you are connected to LPT1.) Exit Windows and reboot the computer. Turn the printer off and then back on again. |
| Pages print, but are totally blank. | The toner cartridge is defective or out of toner. | Replace the toner cartridge. |
| | The sealing tape may still be in the toner cartridge. | Remove the toner cartridge and pull out the sealing tape. Reinstall the toner cartridge, and check by printing a demo page. |
| | The file may have blank pages. | Check the file to make sure that it does not contain blank pages. |
| | Some parts, such as the controller or the board may be defective. | Contact a service representative. |

# Printing Special Pages

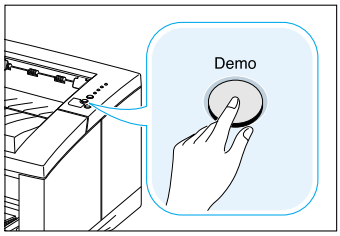


There are special pages within the memory of the printer that will help you to diagnose and learn about problems with your printer.

Use the **Demo** button on the printer control panel to print these special pages. The printer must be in the ready mode.

## Demo Page

Printing the demo page will help you check if the printer is properly working.

Press and hold **Demo** for about 2 seconds until the control panel lights blink slowly.

## Configuration Sheet

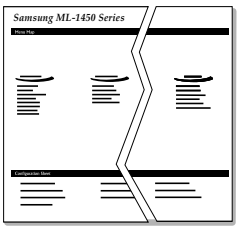


The configuration sheet lists many of the current settings and properties of the printer.

To print the configuration sheet, press and hold **Demo** for about 6 seconds until the control panel lights blink rapidly.

## Cleaning Sheet

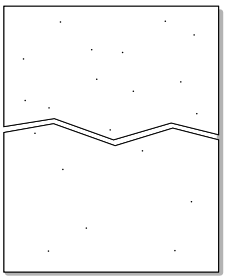

This printing cleans the drum of the toner cartridge. Use this process if you are experiencing blurred, faded or smeared printouts.

Press and hold **Demo** for about 10 seconds until the control panel lights remain illuminated. Discard the blank page produced from the cleaning process.

**Note:** The cartridge cleaning process takes some time. To stop the printing, **turn the power off**.

# Clearing Paper Jams

Occasionally, paper can become jammed during a print job. Some of the causes include:

- The paper tray is loaded improperly or overfilled.
- The paper tray has been pulled out during a print job.
- The top cover has been opened during a print job.
- Paper that does not meet paper specifications has been used. See "Paper Specifications" on page A.2.
- Paper that is outside of the supported size range has been used. See "Paper Specifications" on page A.2.

If a paper jam occurs, the **Paper** and the **Error** lights remain lit on the control panel. Find and remove the jammed paper. If the location of the paper jam is not obvious, look inside the printer.

## Output Area

7

**Note:** Paper jams in this area may result in loose toner on the page. If you get any toner on your clothes, wash them in cold water because hot water will set the toner into the fabric.

1 If the paper is almost completely visible from the top output tray, pull the remaining paper carefully out of the printer.

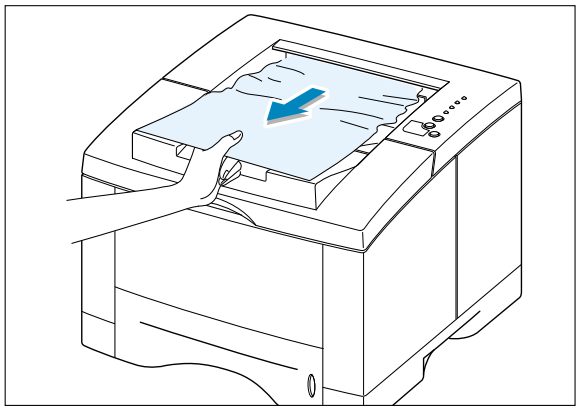

**2** If the jammed paper is not visible or there is resistance when you pull the paper, open the rear output tray.

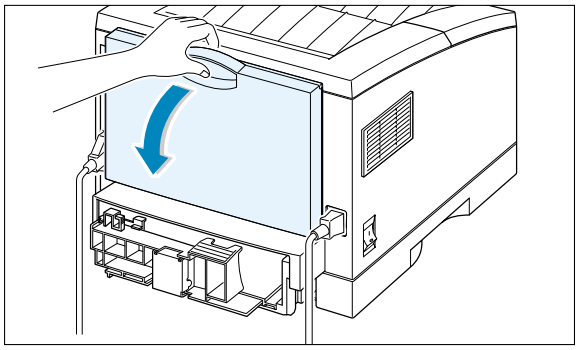

**3** Remove the stopper fastening the rear output tray, and push the tray down so that it is open at 90 degrees angle.

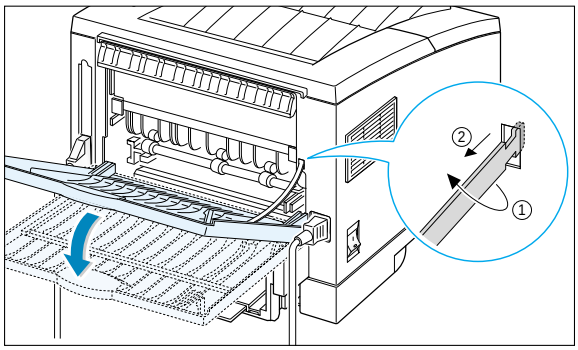


**4** If there is resistance when you pull the paper, squeeze the handle on the right end of the exit roller ❶, then pull the roller in the direction of arrow ❷ .

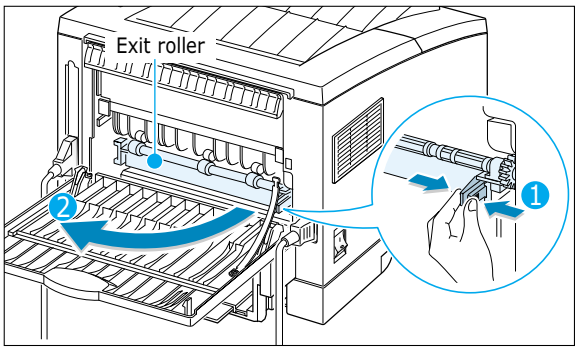


**5** Remove the jammed paper.

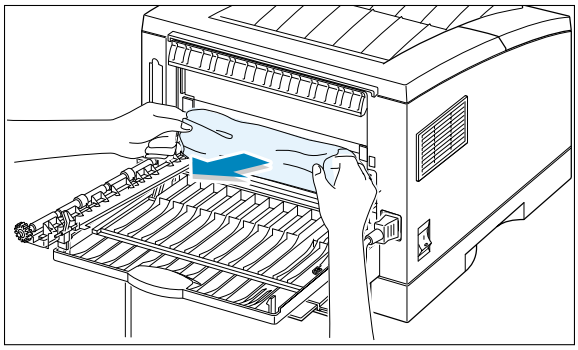

**6** Replace the exit roller.

**Make sure that you click the right end of the roller back in place.** If you fail to do so, the printer system will recognizes that the printer cover is open or that a system fuser error has occurred, and the **Error** light on the control panel will turn on.

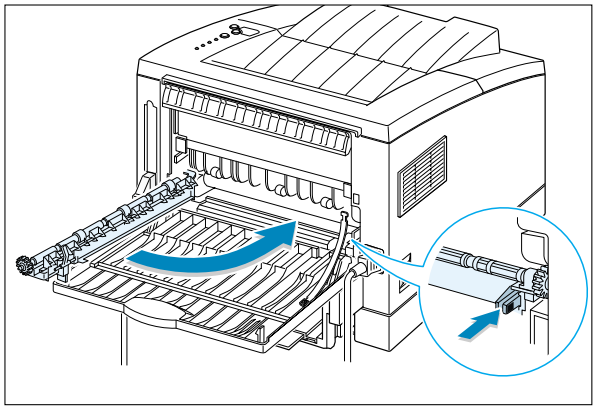

**7** Replace the stopper and close the rear output tray.

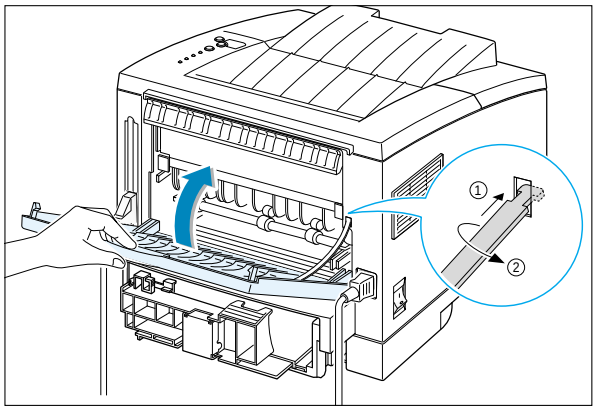


**8** To resume printing, open the top cover, and then close it close it again.

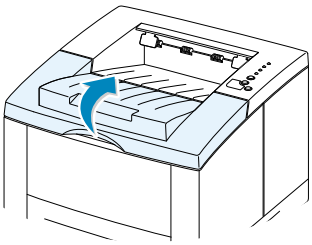

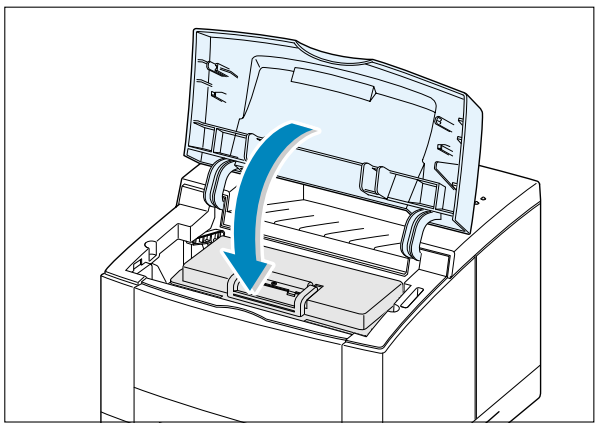

**Note:** If the **Paper** and the **Error** lights do not turn off, there is still jammed paper inside the printer. Check the input area and the inside of the printer.

# Input Area

**Note:** If paper has entered the toner cartridge area, follow the instructions on page 7.12. It is easier to remove such jams from the inside of the printer than the paper input area.

1 Slide out Tray 1 to expose the jammed paper.

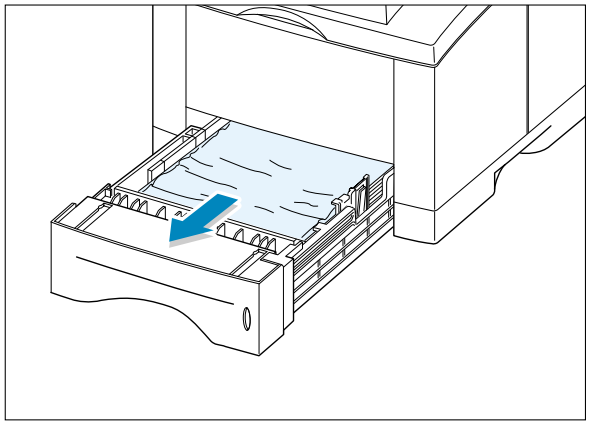

2 Remove any misfed paper by pulling it out by the visible edge from the tray. Make sure that all of the paper is properly aligned in the tray.

**Note:** If the paper is jammed in the paper feed area and cannot be accessed from inside the printer, remove Tray 1 from the printer and carefully pull the jammed paper free from the printer.

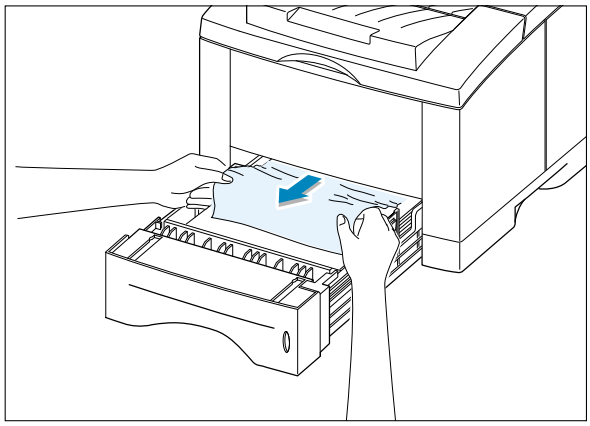

**3** Slide the tray back into the printer.

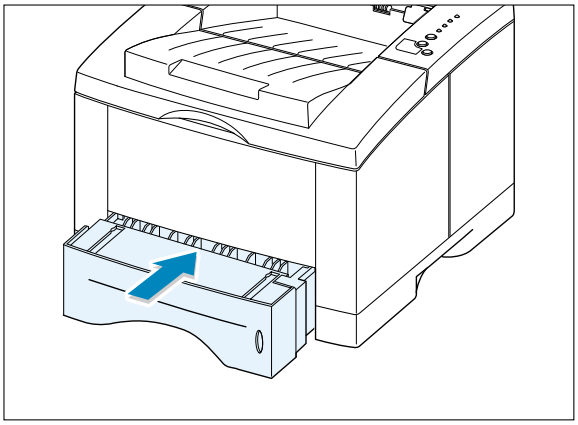

**4** To resume printing, open the top cover, and then close in again.

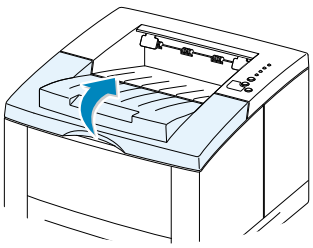

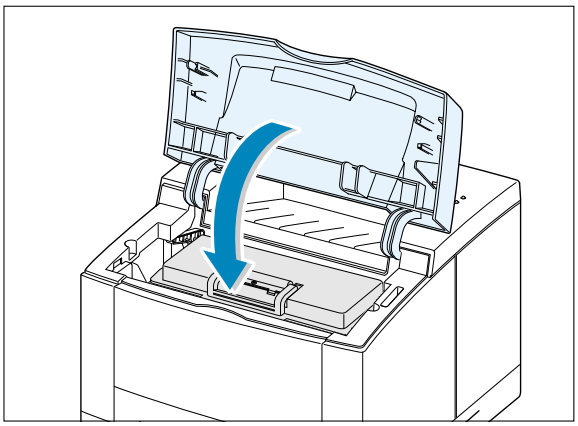

**Note:** If the **Paper** and the **Error** lights do not turn off, there is still jammed paper inside the printer. Check the inside of the printer.

# Inside the Printer

**Note:** Paper jams in this area may result in loose toner on the page. If you get any toner on your clothes, wash them in cold water because hot water will set the toner into the fabric.

1 Open the top cover and remove the toner cartridge.

**CAUTION:** To prevent damage to the toner cartridge, do not expose it to light for more than a few minutes. Place a piece of paper over the top of the toner cartridge to shield it while it is out of the printer.

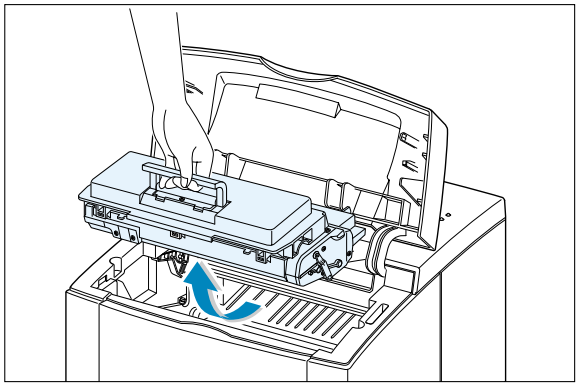

2 Carefully lift up the guide feed.

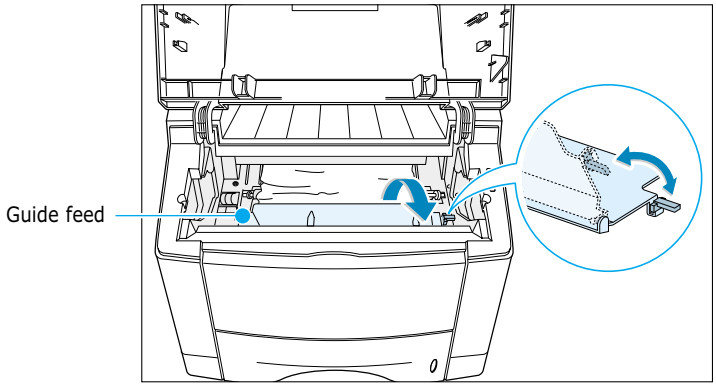


3 Gently pull the paper toward you to remove it from the printer.

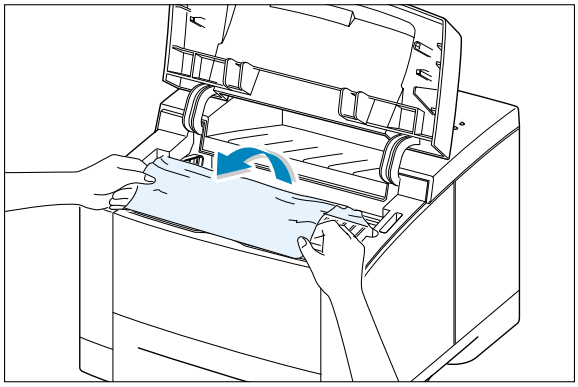

**4** Flip down the guide feed, and reinstall the toner cartridge.

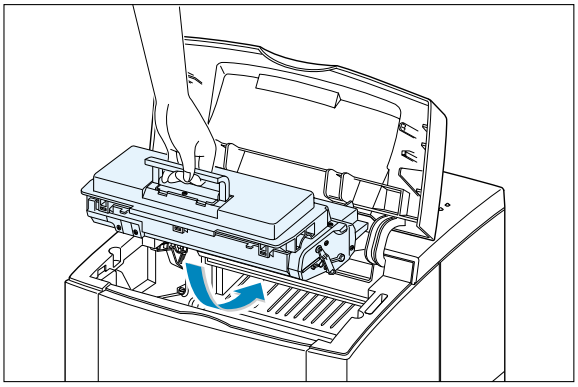

**Note:** If the toner cartridge is difficult to reinstall, make sure the guide feed has been flipped back down into position.

**5** Close the top cover. Printing can be resumed.

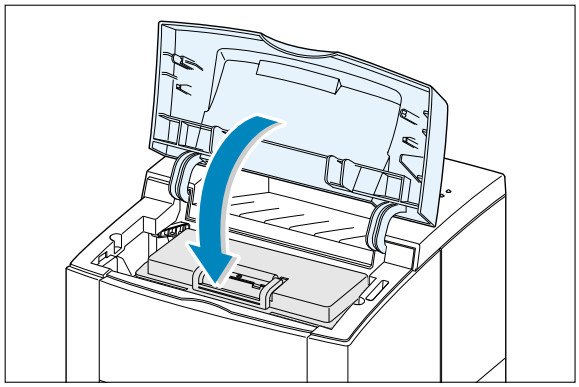

**Note:** If you have the optional Tray 2 installed, and cannot find the jammed paper in the output or input area, or inside the printer, the paper jam may have occurred in the optional Tray 2. See the next page to clear the jammed paper in the optional tray.

# In the Optional Tray 2

1 Pull the option Tray 2 out of the printer.

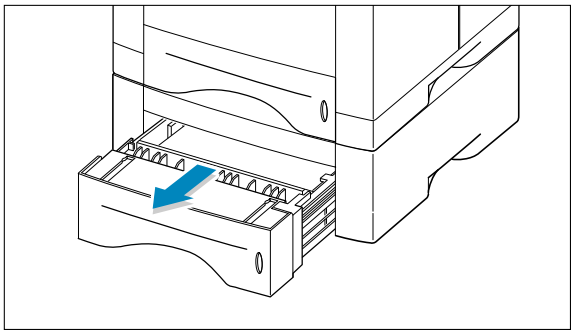

2 If you see the jammed paper, remove the paper from the tray.

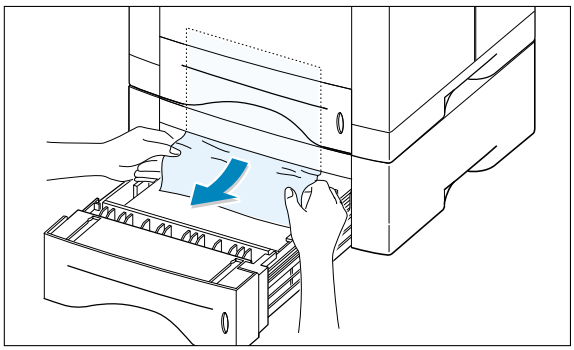

3 If you cannot find the jammed paper in the Tray 2, pull the upper Tray 1 half way out of the printer, and remove the paper as shown in the figure at right.

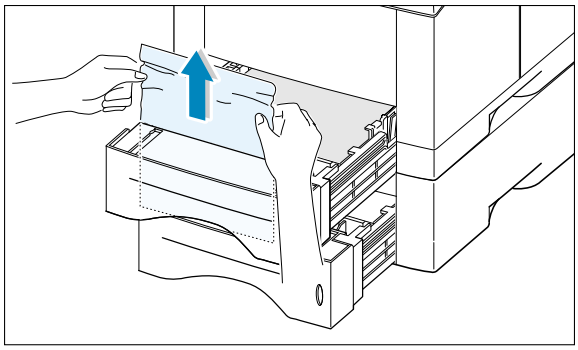

4 Slide the trays back into the printer. Open the top cover, then close it again. Printing can be resumed.

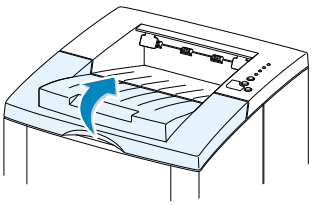

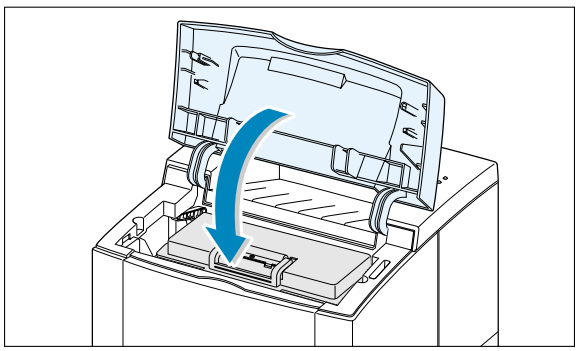

# Tips for Avoiding Paper Jams

By selecting correct paper types and loading them properly, you should be able to avoid most paper jams. If paper jams occur, follow the steps outlined in "Clearing Paper Jams" on page 7.7. If jams occur frequently, make sure you are following these tips to avoid jams.

- Follow the procedures in "**Load Paper**" on page 2.5 to load the paper properly. Make sure the adjustable guides are positioned correctly.
- Do not overload the paper tray. Make sure the paper is under the paper capacity mark on the inside of the paper tray.
- Do not pull out the paper tray while print jobs are in process.
- Flex, fan and straighten the paper before loading it.
- Do not load stacks of labels or transparencies in Tray 1. Labels or transparencies must be fed using the Multi-Purpose Tray.
- Do not load wrinkled, creased, damp or highly curled paper.
- Do not mix paper types in the paper tray.
- Use only recommended print media. See "Paper Specifications" on page A.2.
- Make sure that the recommended print side is facing down when loading the paper into Tray 1 or optional Tray 2 and facing up when loading into the Multi-Purpose Tray.
- Keep print media stored in an acceptable environment.

# Solving Print Quality Problems

## Print Quality Checklist

General print quality problems can be solved by following the checklist below.

- Check the printer properties to make sure that you are using the best available print quality option (see page 5.18).
- Redistribute the toner in the toner cartridge (see page 6.2).
- Clean the inside of the printer (see page 6.4).
- Adjust the print resolution from the printer properties (see page 5.19).
- Check to make sure that Toner Save Mode is off (see page 5.6).
- Troubleshoot general printing problems (see page 7.2).
- Install a new toner cartridge, then check print quality again (see page 2.3).

## Solving Print Quality Problems

| Problem | Solution |
|---|---|
| **Light or faded print**<br> 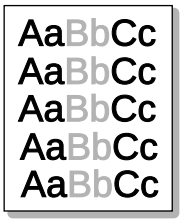 <br> | If a vertical white streak or faded area appears on the page:<br>• The toner supply is low. You may be able to temporarily extend the toner cartridge life. See "Redistributing Toner" on page 6.2. If this does not improve the print quality, install a new toner cartridge.<br>• The paper may not meet paper specifications (for example, the paper is too moist or too rough). See "Paper Specifications" on page A.2.<br>• If the whole page is light, the print resolution setting is too light or Toner Save Mode may be on. Adjust the print resolution and Toner Save Mode within the printer properties. See page 5.18.<br>• A combination of faded and smeared defects may indicate that the toner cartridge needs cleaning. See "Cleaning the Printer" on page 6.4.<br>• The surface of the LSU part inside the printer may be dirty. Clean the LSU (see page 6.5). |

| Problem | Solution |
|---|---|
| **Toner specks**<br> 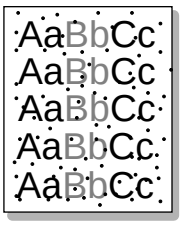 | • The paper may not meet paper specifications (for example, the paper is too moist or too rough). See "Paper Specifications" on page A.2.<br>• The transfer roller may be dirty. See "Cleaning the Inside" on page 6.4.<br>• The paper path may need cleaning. See "Cleaning the Inside"on page 6.4. |
| **Dropouts**<br> 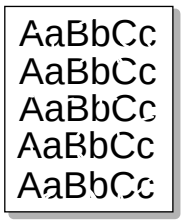 | If faded areas, generally rounded, occur randomly on the page:<br>• A single sheet of paper may be defective. Try reprinting the job.<br>• The moisture content of the paper is uneven or the paper has moist spots on its surface. Try a different kind or brand of paper. See "Paper Specifications" on page A.2.<br>• The paper lot is bad. The manufacturing processes can cause some areas to reject toner. Try a different kind or brand of paper.<br>• The toner cartridge may be defective. See Repetitive vertical defects" on page 7.18.<br>• If these steps do not correct the problems, contact a service representative. |
| **Vertical lines**<br> 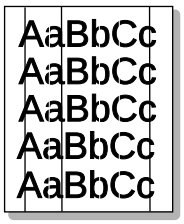 | If black vertical streaks appear on the page:<br>• The photosensitive drum inside the toner cartridge has probably been scratched. Install a new toner cartridge.<br>If white vertical streaks appear on the page:<br>• The surface of the LSU part inside the printer may be dirty. Clean the LSU (see page 6.5). |

| Problem | Solution |
|---|---|
| **Gray background**<br> 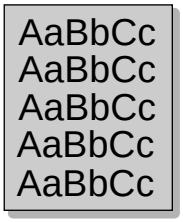 <br> | If the amount of background toner shading becomes unacceptable, the procedures below may help to clear the condition:<br>• Change the paper to a lighter basis weight. See "Paper Specifications" on page A.2.<br>• Check the printer's environment; very dry (low humidity) or high humidity (higher than 80 % RH) conditions can increase the amount of background shading.<br>• Install a new toner cartridge. |
| **Toner smear**<br> 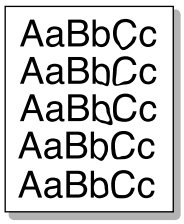 <br> | • Clean the inside of the printer. See "Cleaning the Inside" on page 6.4.<br>• Check the paper type and quality. See "Paper Specifications" on page A.2.<br>• Try installing a new toner cartridge. |
| **Repetitive vertical defects**<br> 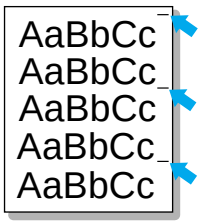 <br> | If marks repeatedly appear on the printed side of the page at even intervals:<br>• The toner cartridge may be damaged. If a repetitive mark occurs every 95 mm or 38 mm on the page, print the cleaning sheet several times to clean the cartridge (see page 6.5). If you still have the same problems, install a new toner cartridge.<br>• Parts in the printer may have toner on them. If the defects occur on the back of the page, the problem will likely correct itself after a few more pages.<br>• The fusing assembly may be damaged. Contact a service representative. |

| Problem | Solution |
|---|---|
| **Background scatter**<br> 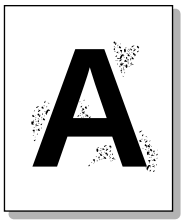 | Background scatter results from bits of toner distributed on the printed page.<br>• The paper may be too damp. Try printing with a different batch of paper. Do not open packages of paper until necessary so that the paper does not absorb too much moisture from the air.<br>• If background scatter occurs on an envelope, change your printing layout to avoid printing over areas that have overlapping seams on the reverse side. Printing on seams can cause this problem.<br>• If background scatter covers the entire surface of a printed page, adjust the print resolution through your software application or the printer properties. |
| **Misformed characters**<br> 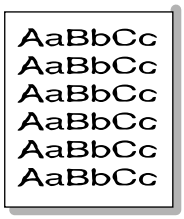 | • If characters are improperly formed, producing hollow images, the paper stock may be too slick. Try a different paper. See "Paper Specifications" on page A.2.<br>• If characters are improperly formed, producing a wavy effect, the scanner unit may need service. Check to see if it also occurs on a demo page by pressing the **Demo** button on the control panel when the printer is ready. If you need service, contact a service representative. |
| **Page skew**<br> 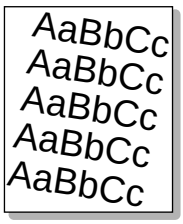 | • Check the paper type and quality. See "Paper Specifications" on page A.2.<br>• Make sure that the paper or other media is loaded correctly and the guides are not too tight or too loose against the paper stack. |

| Problem | Solution |
|---|---|
| **Curl or wave** | • Check the paper type and quality. Both high temperature and humidity will cause paper curl. See "Paper Specifications" on page A.2.<br>• Turn over the stack of paper in the paper tray. Also try rotating the paper 180° in the paper tray.<br>• Open the rear output tray and try printing to the face up output tray. |
| **Wrinkles or creases** | • Make sure that paper is loaded properly.<br>• Check the paper type and quality. See "Paper Specifications" on page A.2.<br>• Open the rear output tray and try printing to the face up output tray.<br>• Turn over the stack of paper in the paper tray. Also try rotating the paper 180° in the tray. |
| **Back of printouts dirty** | • The transfer roller may be dirty. See "Cleaning the Inside" on page 6.4.<br>• Check if the toner is leaking. Clean inside the printer. |
| **Black pages** | • The toner cartridge may not be installed properly. Remove the cartridge and reinsert it.<br>• The toner cartridge may be defective and need replacing. Install a new toner cartridge.<br>• The printer may require repairs. Contact a service representative. |

| Problem | Solution |
|---|---|
| **Loose toner** 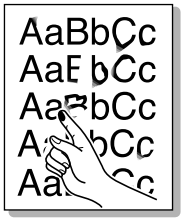 | • Clean the inside of the printer.<br>• Check the paper type and quality. See "Paper Specifications" on page A.2.<br>• Try installing a new toner cartridge.<br>• If the problem persists, the printer may require repairs. Contact a service representative. |
| **Character Voids** 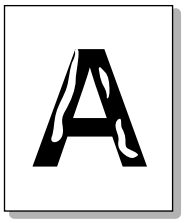 | Character voids are white areas within the parts of characters that should be solid black:<br>• If you are using transparencies when you experience this problem, try another type of transparency. (Because of the composition of transparency media, some character voids are normal.)<br>• You may be printing on the wrong surface of the paper. Remove the paper and turn it around.<br>• The paper may not meet paper specifications. See "Paper Specifications" on page A.2. |
| **Horizontal stripes** 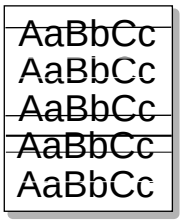 | If horizontally aligned black streaks or smears appear:<br>• The toner cartridge may be installed improperly. Remove the cartridge and reinsert it.<br>• The toner cartridge may be defective. Install a new toner cartridge.<br>• If the problem persists, the printer may require repairs. Contact a service representative. |

# Troubleshooting Error Messages

When the printer detects an error, the control panel indicator lights will indicate error messages. Find the light pattern below that matches the printer light pattern and follow the solutions to clear the error.

## Printer Light Patterns

**Light status legend**

symbol for "light off"

symbol for "light on"

symbol for "light blinking"

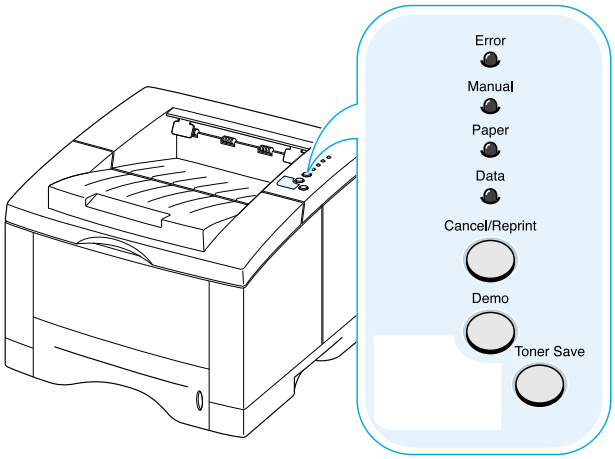


Error
Manual
Paper
Data

### Power off

- Check the power cord and the power switch if your printer does not generate a response.
- Make sure that the printer is powered with the specified AC voltage.

Error
Manual
Paper
Data

### Paper out

The printer is out of paper in the paper tray. The **Paper** light blinks until paper is added.

- Loading paper into the tray will cancel this message and allow you to continue with the print job.

### Paper out in the manual feed mode

While printing in the manual feed mode, the printer is out of paper in the Multi-Purpose Tray.

- Load the correct paper into the Multi-Purpose Tray and press the **Demo** button on the control panel to print each page.

### Paper jam

Paper is jammed inside the printer.

- Clear the paper jam. See "Clearing Paper Jams" on page 7.7.

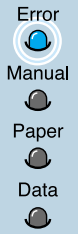


### Door open, no toner cartridge

The printer top cover may be opened or the toner cartridge is not installed.

- Check that the printer top cover door and rear door (face-up output tray) are closed properly.
- Make sure that the toner cartridge is correctly installed in the printer.

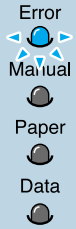


**Memory out** (Insufficient Memory)

The printer ran out of memory in the middle of a print job. The page being printed may have been too complex for the memory capacity of the printer. Press the **Cancel/Reprint** button to cancel the current job.

- Turn the printer power off and back on to remove any unnecessary fonts, macros, or any data currently in printer memory.
- Add more printer memory. See "Memory and PostScript SIMMs" on page F.2.
- For a temporary solution, simplify the image or print at a lower resolution.

**System error**

- Reset the printer by briefly turning the printer off and back on again.
- If the error persists, contact the service representative.

# Common Windows Problems

| Problem | Possible Cause and Solution |
|---|---|
| "File in Use" message appears during installation. | Quit all software applications. Remove all software from the StartUp Group, then restart Windows. Reinstall the printer driver. |
| "Error Writing to LPTx" message appears. | • Make sure that the cables are connected correctly, the printer is on, and the **Data** light on the control panel is on.<br>• If bi-directional communication is not turned on in the driver, it will also cause this message. |
| "General Protection Fault", "Exception OE", "Spool32", or "Illegal Operation" messages appears. | Close all other applications, reboot Windows, and try printing again. |

**Note:** Refer to Microsoft Windows 9x, Me, NT 4.0, 2000 or XP documentation that came with your PC for further information on Windows error messages.

# Common Macintosh Problems

## Problems in the Chooser

| Problem | Possible Cause and Solution |
|---|---|
| The printer driver icon does not appear in the **Chooser**. | Software is not installed correctly.<br>• The LaserWriter driver should be present as a part of the Macintosh OS. Make sure that the LaserWriter driver is in the **Extensions** folder within the **Systems** folder. If not, install the LaserWriter driver component from the Macintosh OS CD.<br>• Make sure that you are using a high-quality cable.<br>• Make sure that the printer is on the correct network. Select **Network** or **AppleTalk Control Panel** from **Control Panels** in the **Apple** menu and then choose the correct network. |
| The printer name does not appear in the **Select a PostScript Printer** box in the **Chooser**. | • Make sure that the cables are connected correctly, the printer is on, and the **Data** light is on.<br>• Make sure that the correct printer driver has been selected in the **Chooser**.<br>• If the printer resides on a network with multiple zones, make sure that the correct zone is selected in the **AppleTalk Zones** box in the **Chooser**.<br>• Make sure **AppleTalk** is on. (The button next to **Active** is selected in the **Chooser**.) You may need to restart the computer to activate the change. |

## Printing Errors

| Problem | Possible Cause and Solution |
|---|---|
| You cannot use the computer while the printer is printing. | Background Printing has not been selected.<br>• For LaserWriter 8.3, turn **Background Printing** on in the **Chooser**. Status messages will now be redirected to the **Print Monitor** allowing you to continue working while the computer is processing data to be sent to the printer.<br>• For LaserWriter 8.4 or higher, turn **Background Printing** on at the Print dialog box. |

# Troubleshooting PS Errors

The following situations are PS language specific and may occur when several printer languages are being used.

**Note:** To receive a printed or screen displayed message when PS errors occur, open the Print Options dialog box and click the desired selection next to the **PostScript errors** section.

| Problem | Possible Cause | Solution |
|---|---|---|
| PostScript file can not be printed. | The PostScript option may not be installed. | • Print a configuration page and verify that the PS version is available for printing.<br>• If PostScript is not available, install the PostScript option. See "Memory and PostScript SIMMs" on page F.2. |
| "This job contains binary data..." message appears. | The pure binary data option is not supported by the PostScript driver. | Open the Properties of the PostScript driver, click on **PostScript**, and click on **Advanced** button. The pure binary data option is not supported. Choose another. |
| A PS error page prints. | Print job may not be PS. | Make sure that the print job is a PS job. Check to see whether the software application expected a setup or PS header file to be sent to the printer. |
| The optional Tray 2 is not selected in the driver. | The printer driver has not been configured to recognize the optional Tray 2. | Open the PostScript driver properties and set the Option Tray item of Device option to **Installed**. |

# Memo

APPENDIX A

# Specifications

This appendix provides information on the following topics:

- ♦ Printer Specifications
- ♦ Paper Specifications

# Printer Specifications

| Item | Specification and Description |
|---|---|
| Print Speed | 14 PPM (A4), 15 PPM (Letter) |
| Resolution | 1200 dpi (ML-1451N, Memory expansion recommended in ML-1450) |
| First Printing Time | Less than 15 seconds |
| WarmUp Time | Less than 40 seconds |
| Power Rating | AC 100 ~ 120 V (USA, Canada) / 220 ~ 240 V (Others), 50 / 60 Hz |
| Power Consumption | 350 W average during operation / Less than 12 W in power-save mode |
| Acoustic Noise | Stand by: Less than 35 dB; Operating: Less than 48 dB |
| Toner Supply | Single cartridge |
| Toner Cartridge Life | 6,000 pages (for starter, 3,000 pages), 5% area coverage |
| Duty Cycle | Monthly: 12,000 pages maximum |
| Weight | 12.4 Kg / 27.3 lb. |
| Package Weight | Paper: 1.83 Kg<br>Plastic: 0.33 Kg |
| External Dimensions | 361 (W) x 409 (D) x 294.5 (H) mm (without options) |
| Operating Environment | Temperature:10 ~ 32 °C / 50 ~ 90 °F; Humidity: 20 ~ 80 % RH |
| Emulation | SPL, PostScript 3 optional |
| Random Access Memory (RAM) | Standard 4 MB (16 MB standard on ML-1451N)<br>Expandable to 68 MB (80 MB on ML-1451N)<br>: 72 pin, EDO, non-parity, 60ns;<br>4 MB, 8 MB, 16 MB, 32 MB, or 64 MB available |
| Fonts | 1 bitmap, 45 scalable (136 PS fonts) |
| Interface Switching | Automatic (Parallel, USB, Network) |
| Interface | • 14PPM (A4) Bidirectional Parallel Standard<br>- Modes supported: Compatible, Nibble, Byte, ECP<br>• USB Interface Standard<br>- USB 1.1 compliant<br>- 12Mbps 1 port<br>• Network Optional (standard for ML-1451N)<br>- Ethernet 10/100M Base T<br>- Novell<br>- TCP/IP and AppleTalk<br>- LPD |

A

# Paper Specifications

## Overview

This printer accepts a variety of media, such as cut-sheet paper (including up to 100 % recycled fiber content paper), envelopes, labels, transparencies and custom-size paper. Properties such as weight, composition, grain and moisture content are important factors affecting printer performance and output quality. Paper that does not meet the guidelines outlined in this manual can cause the following problems:

- Poor print quality
- Increased paper jams
- Premature wear on the printer, requiring repairs.

**Notes:**

- Some paper may meet all of the guidelines in this manual and still not produce satisfactory results. This might be the result of improper handling, unacceptable temperature and humidity levels, or other variables over which Samsung has no control.
- Before purchasing large quantities of paper, make sure that the paper meets the requirements specified in this user guide. Always test paper before buying large quantities.

**CAUTION:** Using paper that does not meet that stated specifications may cause problems for the printer, requiring repairs. Repairs made necessary by the use of paper not specified in this manual are not covered by the Samsung warranty or service agreements.

# Supported Sizes of Paper

| Tray 1 or Optional Tray 2 | Dimensions[a] | Weight | Capacity[b] |
|---|---|---|---|
| Letter | 8.5 X 11 in. (216 X 279 mm) | 16 to 28 lb Bond (60 to 105 g/m²) | 550 sheets of 20 lb Bond (75 g/m²) paper |
| A4 | 210 X 297 mm (8.3 X 11.7 in.) | | |
| Executive | 7.3 X 10.5 in. (191 X 267 mm) | | |
| Legal | 8.5 X 14 in. (216 X 356 mm) | | |
| B5 (JIS) | 182 X 257 mm (7.2 X 10 in.) | | |
| Folio | 216 X 330 mm (8.5 X 13 in.) | | |

a. The printer supports a wide range of media sizes. See "Printing on Card Stock or Custom-sized Media" on page 4.17.

b. Capacity may vary depending on media weight and thickness, and environmental conditions.

| Multi-Purpose Tray | Dimensions[a] | Weight | Capacity[b] |
|---|---|---|---|
| Minimum Size (custom) | 90 X 148 mm (3.5 X 5.83 in.) | 60 to 163 g/m² Bond (16 to 43 lb ) | 100 sheets of 75 g/m² Bond (20 lb) paper |
| Maximum Size (custom) | 216 X 356 mm (8.5 X 14 in.) | | |
| Transparency | Same minimum and maximum paper sizes as listed above. | Thickness: .10 X .14 mm (0.0039 X 0.0055 in.) | 20 typical |
| Labels[c] | | Thickness: .10 X .14 mm (0.0039 X 0.0055 in.) | 25 typical |
| Envelopes | | up to 90 g/m² (16-24 lb) | up to 10 |

a. The printer supports a wide range of media sizes. See "Printing on Card Stock or Custom-sized Media" on page 4.17.

b. Capacity may vary depending on media weight and thickness, and environmental conditions.

c. Smoothness - 100 to 250 (Sheffield)

**Note:** You may experience some paper jams when using any media with a length of less than 148 mm (5.83 in.). For optimum performance, make sure you are storing and handling the paper correctly. Please refer to "Printer and Paper Storage Environment" on page A.6.

# Guidelines for Using Paper

For best results, use conventional 90 g/m$^2$ (24 lb) paper. Make sure the paper is of good quality, and free of cuts, nicks, tears, spots, loose particles, dust, wrinkles, voids, and curled or bent edges.

If you are unsure of what type of paper you are loading (such as bond or recycled), check the label on the package of the paper.

The following problems with paper can cause print quality deviations, jamming, or even damage to the printer.

| Symptom | Problem with Paper | Solution |
|---|---|---|
| Poor print quality or toner adhesion Problems with feeding | Too moist, too rough, too smooth, or embossed; faulty paper lot | Try another kind of paper, between 100 ~ 250 Sheffield, 4 ~ 5 % moisture content. |
| Dropout, jamming, curl | Stored improperly | Store paper flat in its moisture-proof wrapping. |
| Increased gray background shading /printer wear | Too heavy | Use lighter paper, open the rear output tray. |
| Excessive curl problems with feeding | Too moist, wrong grain direction or short-grain construction | • Open the rear output tray.<br>• Use long-grain paper. |
| Jamming, damage to printer | Cutouts or perforations | Do not use paper with cutouts or perforations. |
| Problems with feeding | Ragged edges | Use good quality paper |

**Notes:**

- Do not use letterhead paper that is printed with low-temperature inks, such as those used in some types of thermography.
- Do not use raised or embossed letterhead.
- The printer uses heat and pressure to fuse toner to the paper. Make sure that any colored paper or preprinted forms use inks that are compatible with this fusing temperature (200 °C or 392 °F for 0.1 second).

## Paper Specifications

| Category | Specifications |
|---|---|
| Acid Content | 5.5 ~ 8.0 pH |
| Caliper | .094 ~ .18 mm (3.0 ~ 7.0 mils) |
| Curl in Ream | Flat within 5 mm (.02 in.) |
| Cut Edge Conditions | Cut with sharp blades with no visible fray. |
| Fusing Compatibility | Must not scorch, melt, offset, or release hazardous emissions when heated to 200 °C (392 °F) for .1 second. |
| Grain | Long Grain |
| Moisture Content | 4 % ~ 6 % by weight |
| Smoothness | 100 ~ 250 Sheffield |



# Paper Output Capacity

| Output Tray | Capacity |
|---|---|
| Top output (Face-down) tray | 250 sheets of 20 lb bond (75 g/m$^2$) paper |
| Rear output (Face-up) tray | 100 sheets of 20 lb bond (75 g/m$^2$) paper |

# Printer and Paper Storage Environment

Ideally, the printer and paper storage environment should be at or near room temperature, and not too dry or humid. Remember that paper absorbs and loses moisture rapidly.

Heat works with humidity to damage paper. Heat causes the moisture in paper to evaporate, while cold causes it to condense on the sheets. Heating systems and air conditioners remove most of the humidity from a room. As paper is opened and used, it loses moisture, causing streaks and smudging. Humid weather or water coolers can cause the humidity to increase in a room. As paper is opened and used it absorbs any excess moisture, causing light print and dropouts. Also, as paper loses and gains moisture it can distort. This can cause paper jams.

As a result, paper storage and handling are as important as the paper-making process itself. Paper storage environmental conditions directly affect the feed operation.

Care should be taken not to purchase more paper than can be easily used in a short time (about 3 months). Paper stored for long periods may experience heat and moisture extremes, which can cause damage. Planning is important to prevent damage to a large supply of paper.

Unopened paper in sealed reams can remain stable for several months before use. Opened packages of paper have more potential for environment damage, especially if they are not wrapped with a moisture-proof barrier.

The paper storage environment should be properly maintained to ensure optimum printer performance. The required condition is 20 ° to 24 °C (68° to 75 °F), with a relative humidity of 45 % to 55 %. The following guidelines should be helpful when evaluating the paper's storage environment:

- Paper should be stored at or near room temperature.
- The air should not be too dry or too humid (due to the hygroscopic properties of paper).
- The best way to store an opened ream of paper is to rewrap it tightly in its moisture-proof wrapping. If the printer environment is subject to extremes, unwrap only the amount of paper to be used during the day's operation to prevent unwanted moisture changes.

# Envelopes

Envelope construction is critical. Envelope fold lines can vary considerably, not only between manufacturers, but also within a box from the same manufacturer. Successful printing on envelopes depends upon the quality of the envelopes. When selecting envelopes, consider the following components:

- **Weight:** The weight of the envelope paper should not exceed 90 g/m$^2$ (24 lb) or jamming may occur.
- **Construction:** Prior to printing, envelopes should lie flat with less than 6 mm (0.25 in.) curl, and should not contain air.
- **Condition:** Envelopes should not be wrinkled, nicked, or otherwise damaged.
- **Temperature:** You should use envelopes that are compatible with the heat and pressure of the printer.
- **Size:** You should only use envelopes within the following size ranges.

| | Minimum | Maximum |
|---|---|---|
| Multi-Purpose Tray | 90 X 148 mm (3.5 X 5.83 in.) | 216 X 356 mm (8.5 X 14 in.) |
| Optional Tray 2 | 148 X 210 mm (5.83 X 8.3 in.) | 216 X 356 mm (8.5 X 14 in.) |

**Notes:**

- Use only the Multi-Purpose Tray to print envelopes.
- You may experience some paper jams when using any media with a length less than 148 mm (5.83 in.). This may be caused by paper that has been affected by environmental conditions. For optimum performance, make sure you are storing and handling the paper correctly. Please refer to “Printer and Paper Storage Environment” on page A.6.

## Envelopes with Double Side Seams

Double side-seams construction has vertical seams at both ends of the envelope rather than diagonal seams. This style may be more likely to wrinkle. Be sure the seam extends all the way to the corner of the envelope as illustrated below.

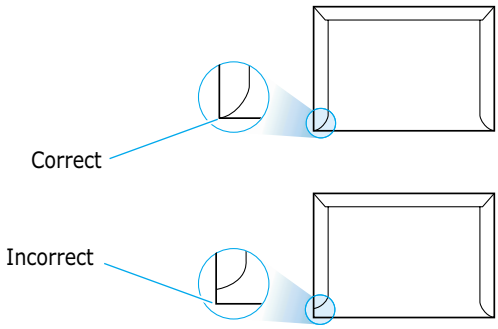


## Envelopes with Adhesive Strips or Flaps

Envelopes with a peel-off adhesive strip or with more than one flap that folds over to seal must use adhesives compatible with the heat and pressure in the printer. The extra flaps and strips might cause wrinkling, creasing, or even jams and may even damage the fuser.

## Envelope Margins

The following gives typical address margins for a commercial #10 or DL envelope.

| Type of Address | Minimum | Maximum |
|---|---|---|
| Return address | 15 mm (0.6 in.) | 51 mm (2 in.) |
| Delivery address | 51 mm (2 in.) | 89 mm (3.5 in.) |

**Notes:**

- For best print quality, position margins no closer than 15 mm (0.6 in.) from the edges of the envelope.
- Avoid printing over the area where the envelope's seams meet.

## Envelope Storage

Proper storage of envelopes helps contribute to print quality. Envelopes should be stored flat. If air is trapped in an envelope, creating an air bubble, then the envelope may wrinkle during printing. See "Printing on Envelopes" on page 4.12.

# Labels

**CAUTIONS:**

- To avoid damaging the printer, use only labels recommended for laser printers.
- To prevent serious jams, always use the Multi-Purpose Tray to print labels and always use the rear output tray.
- Never print on the same sheet of labels more than once and never print on a partial sheet of labels.

When selecting labels, consider the quality of each component:

- **Adhesives:** The adhesive material should be stable at 200 °C (392 °F), the printer's fusing temperature.
- **Arrangement:** Only use labels with no exposed backing between them. Labels can peel off sheets with spaces between the labels, causing serious jams.
- **Curl:** Prior to printing, labels must lie flat with no more than 13 mm (.5 in.) of curl in any direction.
- **Condition:** Do not use labels with wrinkles, bubbles, or other indications of separation.

See "Printing on Labels" on page 4.14.

# Transparencies

Transparencies used in the printer must be able to withstand 200 °C (392 °F), the printer's fusing temperature.

**CAUTION:** To avoid damaging the printer, use only transparencies recommended for use in laser printers.

See "Printing on Transparencies" on page 4.15.

APPENDIX B

# Using Your Printer with a Macintosh

Your printer supports Macintosh systems with a built-in USB interface or 10/100 Base-TX network interface card (option for ML-1450, standard for ML-1451N). When you print a file from Macintosh, you can use the QPDL driver to support your printer's major printing features. You can also use PostScript driver by installing the PPD file.

Topics included in this appendix are:

- Macintosh Installation
- Using QPDL Driver
- Using PS Driver

# Macintosh Installation

## System Requirements

To use your ML-1450 series printer and its software with a Macintosh, your system should have:

**Macintosh Hardware Requirement**

- One of the following Macintosh models:
  -Power Macintosh series (for network connection only)
  -Power Macintosh G3, G4
  -iMac series
  -iBook series
  -Power Book series
- USB interface or network interface (for network connection only)

**Macintosh System Requirement**

- For network connection: System 7.6 or later
- For USB connection: System 8.0 or later

**Printer Hardware Requirement**

- PS SIMM (for PS driver user only. PS SIMM is option)
- Network interface (for network connection only. Network interface is option for ML-1450. ML-1451N came with a built-in network interface.)

B

# Connecting To Macintosh

You can connect the printer to your Macintosh using the USB interface or network interface.

## USB Connection

USB cable is not provided in your printer. Purchase a certified USB 1.0 or 1.1 compliant cable.

1 Turn off the printer and computer.

2 Hold the USB cable so the icon faces up and connect it to your printer's USB connector.

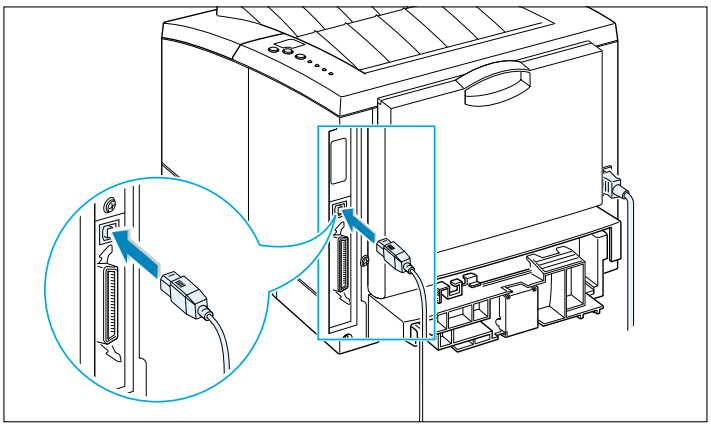

3 Connect the other end of the cable to an available USB port on your Macintosh computer. If you have any connecting problems, please refer to your computer documentation.

**Note:** If you are using a USB hub, connect the printer's cable to the first tier of the hub or the printer may malfunction. If the printer doesn't work with the hub, connect it directly to the USB port.

## Network Connection

If you have a printer with 10/100Base-TX network interface card installed (standard for ML-1451N, option for ML-1450), you can connect to an Ethernet network. Use a Category 5 twisted pair cable with RJ-45 connectors for 10/100Base-T Ethernet.

1 Plug one end of the network cable into the twisted-pair connector on the back of the printer.

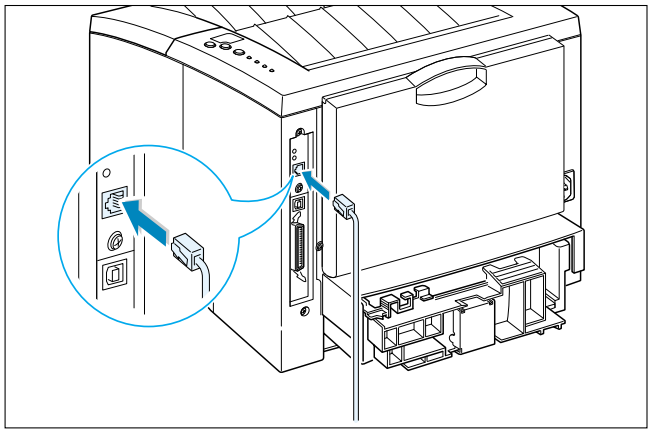

2 Connect the other end to the network hub.

**Note:** You must configure your printer for the network. For information about configuring your printer, refer to the Network User's Guide.

## Installing Software for Macintosh

1 Turn on your computer and printer.

2 Insert the CD-ROM which came with your printer into the CD-ROM drive.

3 Double-click **ML-1450** on your Macintosh desktop.

4 Click the **Samsung Laser Printer Installer** icon next to the each language to select the correct one.
If you want to see the User Guide, click User's Guide.

5 Click **Continue**, then click **Continue**.

6 The Samsung Laser Printer Installer opens. Select installation type. The installer provides two options for software installation:

- **Easy Install** (recommended method): This option loads PPD and installs QPDL driver.
- **Custom Install** : This option allows you to choose which components will be installed.
  If you want to use the QPDL driver, you must install it.
  If you want to use PostScript driver, you must install the PPD file.
  If you want to use Adobe Acrobat Reader program, you must install it.

7 Click **Install**.

8 After installation is complete, click **Quit**.

# Using QPDL Driver

If you want to use your printer's QPDL driver on your Macintosh computer, take the following steps:

QPDL Driver installation method is different for USB connection and the network connection.

## Installing QPDL Driver on the USB-connected Macintosh

1 From the **Apple** menu, select **Chooser**.

2 From the left pane of the Chooser window, click **SAMSUNG QPDL**. Then the ML-1450 will appear in the right pane of the Chooser window.

3 Click the ML-1450, and close the Chooser window.

4 You see the message box indicating that you have changed your current printer. Click **OK**.

5 A ML-1450 printer icon will be created on your desktop.

B

## Installing QPDL Driver on the network-connected Macintosh

1 From the **Apple** menu, select **Chooser**.

2 Click **SAMSUNG QPDL**. The name of your printer appears in the list. Select **SEC000xxxxxxxxx** from the printer box (where the **xxxxxxxxx** varies depending on each of the products.), and close the Chooser window.

3 When the setup is completed, you can see your printer icon is created on the desktop window.

# Printing from a Macintosh

When you print with a Macintosh, you need to check the printer software setting in each application you use. Follow these steps to print from a Macintosh:

1 Open a Macintosh application and select a file you want to print.

2 Open the **File** menu, and click **Page Setup** (**Document Setup** in some applications). You will see the Page Setup dialog box.

3 Choose your paper size, orientation, paper type and other options and click **OK**.

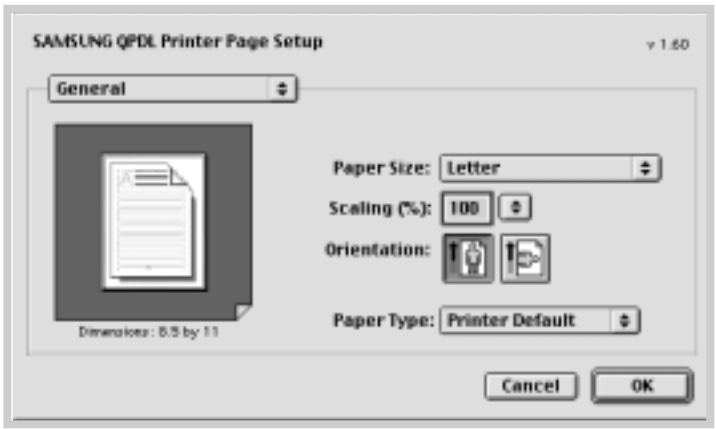

Choose **Watermark** if you want to add a watermark to each page in your document to emphasize its purpose or indicate how it should be handled. For details on the watermark option, see page 5.21.

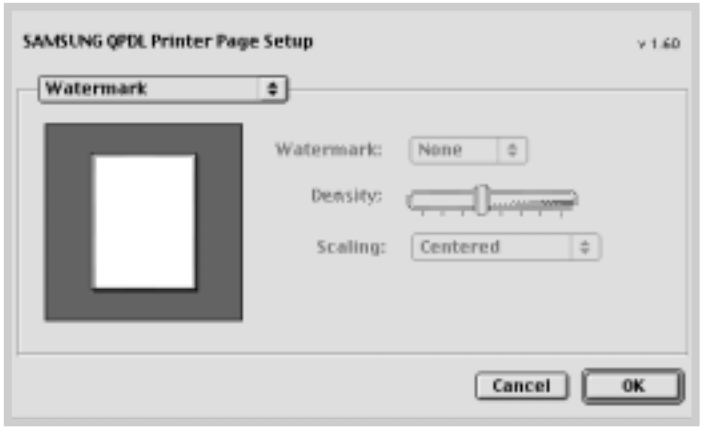


4 Now open the **File** menu and click **Print**. You see the main printer settings dialog box.

B

5 Choose the number of copies and indicate which pages you want to print. For advanced printing features, select the desired option. For details, see page B.9.

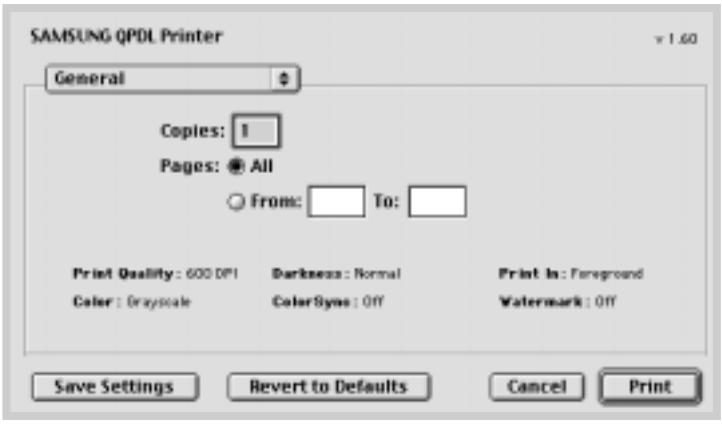


Select the desired option for advanced printing features.

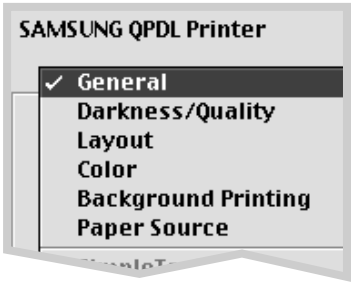


6 Click **Print** when you are finished checking your settings.

# Advanced Printing

The Page Setup dialog box contains five categories of page setup properties. Listed below is the name of each property.
-Darkness/Quality
-Layout
-Color
-Background Printing
-Paper Source

Figures below display each property in the Page Setup dialog box.

## Darkness/Quality

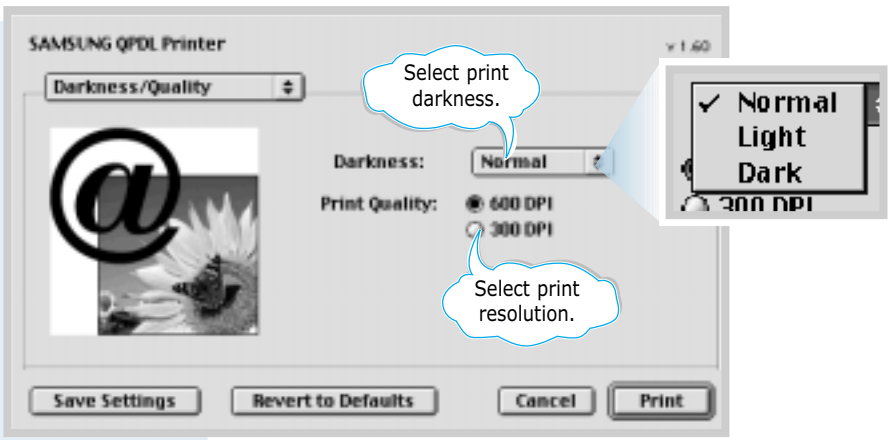


## Layout

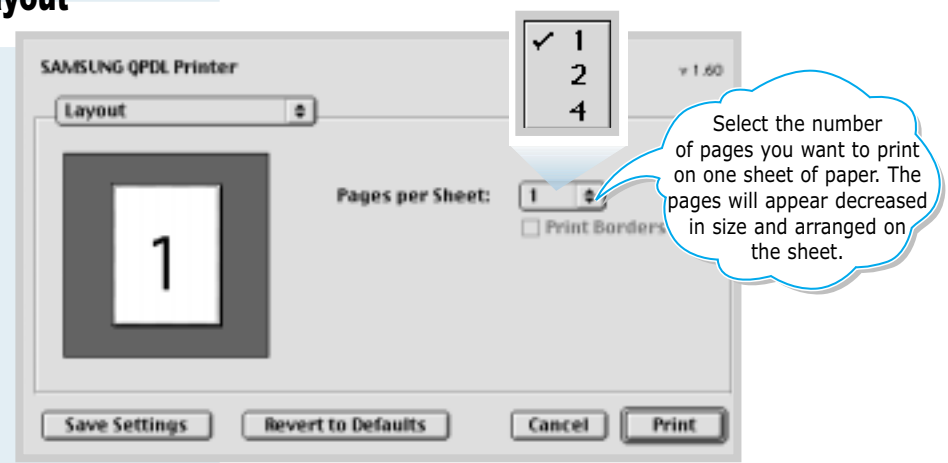

## Color

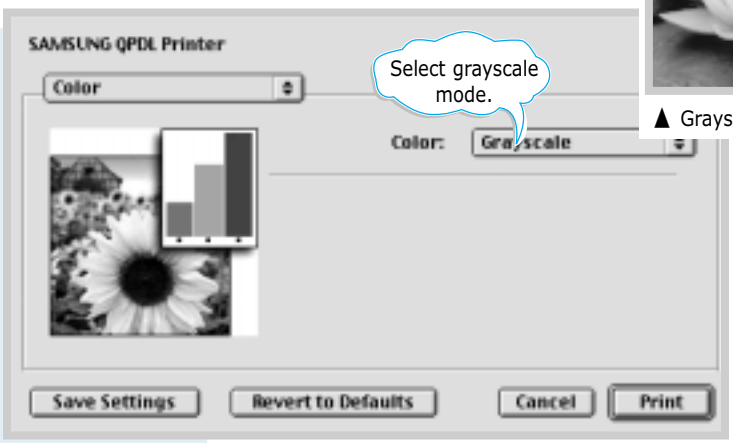


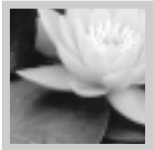

▲ Grayscale

▲ Black&White

## Background Printing

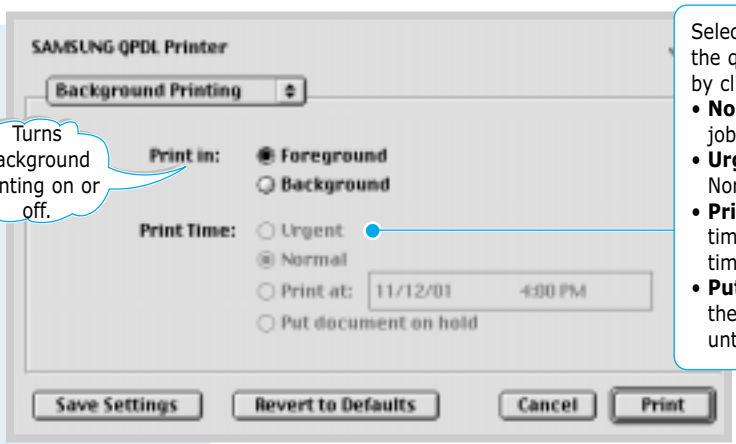


Select a priority for your print job in the queue of jobs waiting to print, by clicking one of the following:

- **Normal** to print in the order the job is received.
- **Urgent** to print before any Normal priority job.
- **Print at:** to print at the specific time you enter in the day and time in the fields to the right.
- **Put document on hold** to hold the print job in the print queue until you are ready to release it.

## Paper Source

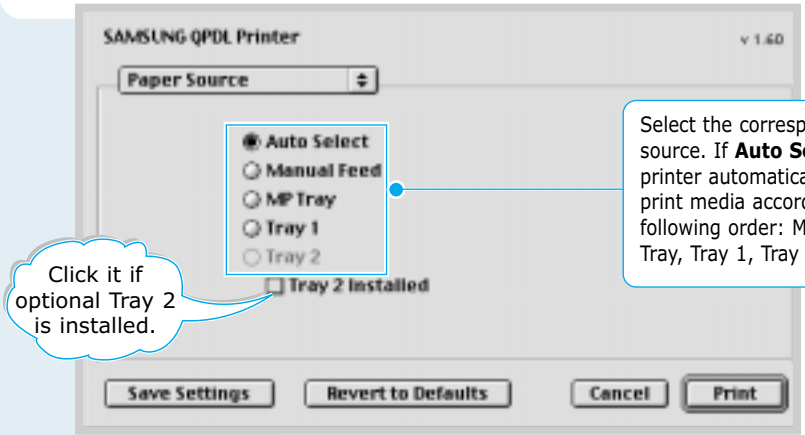


Select the corresponding paper source. If **Auto Select** is set, the printer automatically selects the print media according to the following order: Multi-Purpose Tray, Tray 1, Tray 2 (option).

# Using PS Driver

If you want to use the PS driver which were installed on your Macintosh computer, you must install the PPD file to access your printer features and allow the computer to communicate with your printer.

PPD file installation method is different for USB connection and the network connection.

## Installing PPD file on the USB-connected Macintosh

**Note:** The position of **Desktop Printer Utility** may vary depending to the MAC OS.

1. Follow the instruction as described on page B.4 to install the PPD file on your computer.
2. Open the **Macintosh HD** and double-click **Application**.
3. Double-click **Utilities**.
4. Double-click **Desktop Printer Utility**.
5. Select **LaserWriter 8**, and select **Printer (USB)** in the list box. Then click **OK**.
6. Click the **Change** button in the USB Printer Selection section. The name of your printer appears in the list.
7. Click **ML-1450**, then click **OK**.
8. Click the **Auto Setup** button in the PostScript Printer Description (PPD) File section.

   If Auto Setup does not work properly, click **Select PPD** and choose **Samsung ML-1450 Series**.
9. When the setup is completed, click the **Create** button.
10. Click the **Save** button to save ML-1450 as a desktop printer.

# Installing PPD file on the network-connected Macintosh

1 Follow the instruction as described on page B.4 to install the PPD file on your computer.

2 From the **Apple** menu, select **Chooser**.

3 Click **LaserWriter 8** (the PostScript driver provided with your Macintosh). The name of your printer appears in the list. Select **SEC000xxxxxxxxx** from the printer box (where the **xxxxxxxxx** varies depending on each of the products.).

4 When the setup is completed, you see your printer icon is created as a desktop printer.

If Auto Setup does not work properly, click **Select PPD** and choose **Samsung ML-1450 Series**, then click **OK**.

# Printing from a Macintosh

Follow these steps to print from a Macintosh:

1. Open a Macintosh application and select a file you want to print.

2. Open the **File** menu, and click **Print**. You see the main printer settings dialog box.

3. Choose the number of copies and indicate which pages you want to print. For advanced printing features, select the desired option.

4. Click **Print** when you are finished checking your settings.

APPENDIX C

# Printing from DOS Applications

While your printer is primarily a Windows printer, you can also print from a DOS software program using the Remote Control Panel utility provided in the ML-1450 series CD-ROM.

Topics included in this Appendix are:

- About Remote Control Panel for DOS
- Installing the Remote Control Panel for DOS Users
- Selecting Print Settings

# About Remote Control Panel for DOS

DOS users have access to many printer features through specific DOS printer drivers; however, many software manufactures do not develop printer drivers for their software programs. The Samsung ML-1450 series printer provides the DOS software control panel for improved printer control when DOS printer drivers are not available or when certain print settings are not available through DOS software programs.

**Note:** The ML-1450 series printer's Remote Control Panel is not a printer driver. It should be used to set print settings that are not available through DOS software programs. Printer drivers are supplied by the manufacturers of your DOS software programs. If your DOS software program does not include a printer driver for your Samsung printer, contact the manufacturer of the software program or use one of the alternate printer drivers.

# Installing the Remote Control Panel

The Remote Control Panel utility is provided on the printer software CD-ROM.

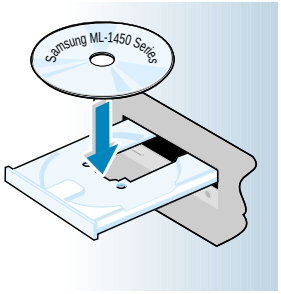


1 Place the CD-ROM in the CD-ROM drive. Installation will start automatically.

**If the CD-ROM drive does not automatically run:**

Select **Run** from the **Start** menu, and type **x:\cdsetup.exe** in the Open box (where **x** is the drive letter for the CD-ROM drive), then click **OK**.

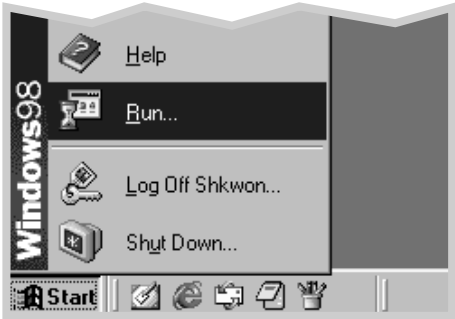


2 When the opening screen appears, select the appropriate language.

3 Click **Install the Samsung Software-III on your PC (WinRCP)**.

4 Click **Next**.

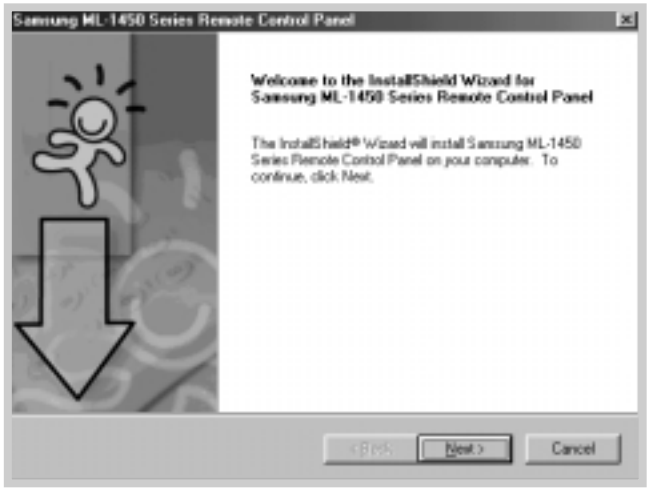

5 The files are copied into the appropriate directory.

6 Click **Finish**.

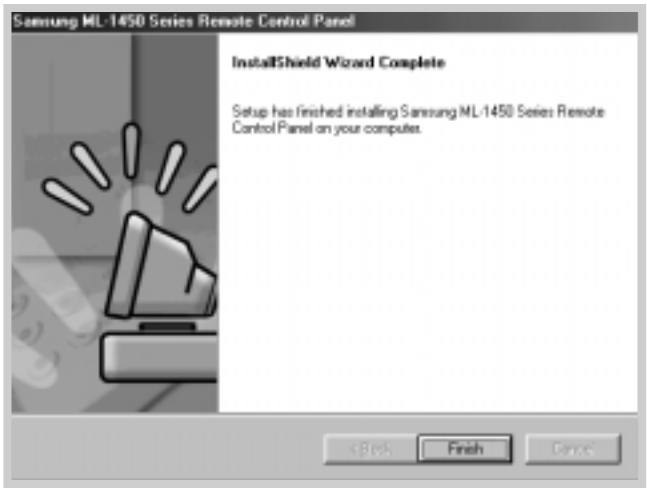


# Uninstall Remote Control Panel

The Uninstall icon in the ML-1450 series program group allows you to select and remove any or all of the Windows ML-1450 printing system components.

1 From the **Start** menu, select **Programs**.

2 Select **Samsung ML-1450 Series**, and then **Uninstall Remote Control Panel.**

3 Click **OK**.

4 The Samsung ML-1450 Series Remote Control Panel and all of its components are removed from your computer.

5 Click **Finish**.

# Selecting Print Settings

When you are running DOS, you can use this Remote Control Panel to select print settings that may not be available on some DOS programs. Typically, duplicate print settings that are selected from a DOS software program override the ones that are selected in the ML-1450 series Remote Control Panel.

### Starting Remote Control Panel

1 From the **Start** menu, select **Programs**.

2 Select **Samsung ML-1450 Series**, and then **Remote Control Panel.**

3 The Dialog box allows you to access all the information you need when using your printer. If necessary, click other tabs on the top of the dialog box to access other features.

4 When you complete the print settings, click **Send** until the Print dialog box is displayed.

The Remote Control Panel allows you to access the following features:

## PRINTING

- **Size** sets the paper size.
- **Paper Tray** sets the default paper source.
- **Copies** sets the number of copies printed for each page.
- **Orientation** determines how the output is printed on the page.
- **Top Margin** sets the top margin of the print material.
- **Left Margin** sets the left margin of the print material.
- **AUTO CR** sets how the printer performs a carriage return.
- **Lines Per Page** sets the number of lines that print on each page. The setting can range from 5 to 128 lines per page.

## CONFIG

- **Emulation** You can select the emulation for printing a document between **AUTO** and **PCL**. The factory default is **AUTO**.
- **Power Save** determines the length of time the printer waits after a job is printed before it goes to a reduced power state. If the printer is used frequently, select **Off** which keeps the printer ready to print with the minimum warm-up time. This uses more electricity to keep the printer warm and ready to print.
- **Auto Continue** determines what action the printer should take when a manual feed print job is sent to the printer and there is no paper in the Multi-Purpose Tray. If it is checked, the printer will pick up the paper from the standard Tray 1 or optional Tray 2 after fifteen seconds. Otherwise, the printer will wait for you to load paper in the Multi-Purpose Tray.
- **Jam Recovery** determines what action the printer should take when a paper jam occurs. If it is unchecked, the printer does not reprint a page that has jammed. If it is checked, the printer keeps the image in memory for a printed page until the printer signals that the page has successfully printed. The printer reprints all jammed pages.
- **Econo Mode** determines the toner quantity the printer should use when printing. If it is checked, the printer conserves toner when printing. The default value is unchecked, which provides 100% usage.

## JOB

- **Toner Density** determines the toner density of page. The default value is **Medium**.
- **Paper Type** provides the printer with information about the type of paper to be used for a print job. For the best result, set this to the paper type you loaded in the paper tray of the printer. When using the plain paper, set this to **Printer default**.
- **Image Quality** improves the print quality of your text and image and make the characters and images appear smoother. It is preset to **Text Enhancement** at the factory.
- **Timeout** determines the amount of time (in seconds) the printer will wait before printing the last page of a print job that does not end with a command to print the page or a formfeed character. You can set from 0 to 300 seconds.

## TEST

- **Self Test** prints the configuration sheet. A list of the user default settings, the installed options, and the amount of printer memory available prints.
- **Demo Page** prints the demonstration page. It shows the printer features and specifications.

## PCL

- **Typeface** allows you to select the desired typeface. This setting is ignored when the software application specifies a font.
- **Symbol set** determines the symbol set. A symbol set is a set of alphabetic and numeric characters, punctuation, and special symbols used when printing with a selected font.
- **Pitch** sets the font pitch (only if you have selected a scalable monospaced font). Pitch refers to the number of fixed-space characters in a horizontal inch of type.
- **Point Size** sets the font point size (only if you have selected a scalable typographic font). Point size refers to the height of the characters in the font. One point equals approximately 1/72 of an inch. You can select point sizes from 4.0 to 999.75 in increments of 0.25 points.
- **Courier** determines the courier font type: Regular or Dark.
- **Font List** prints the font list showing all the fonts available for PCL emulation.

## PS 3

- **Font List** prints the font list showing all the fonts available for PostScript (only available when the PostScript option is installed).
- **Print error information** determines what action the printer should take when an error occurs in PS interpreter. When set to **Off**, the printer does not print error information when error occurs in PS interpreter. When set to **On**, the printer prints error information when error occurs in PS interpreter.

APPENDIX D

# Using Windows PostScript Driver

If you want to use the PostScript driver provided with your system CD-ROM or diskettes to print a document, use the information on this Appendix.

Topics included in this Appendix are:

- Setting Your Printer with PS Option
- Installing PPD Files
- Accessing the PS Printer Driver Features

# Setting Your Printer with the PS Option

If you want to use the PostScript driver to print a document, your printer should have:

- PS SIMM (Option)
- 12 MB or more RAM. ML-1450 comes with 4 MB RAM, so additional 8 MB or more RAM should be added. (ML-1451N come with 16 MB RAM, so additional RAM is not required.)

For instructions on installing the printer options, see Appendix F, "Printer Options."

# Installing PPD Files

PPDs, in combination with the PostScript driver, access the printer features and allow the computer to communicate with the printer. An installation program for the PPDs is provided on the ML-1450 CD-ROM.

**Notes:**

- Installing the PostScript printer driver may require the use of the operating system files on the original CD-ROM or diskette that came with your system.
- If you have a PostScript 3 driver and want to use it, you must install the PostScript 3 PPD which is also provided on the ML-1450 series CD-ROM.

D

Before installing PPD files, make sure that the printer and the PC are properly connected with parallel, USB, or optional network interface. For information on:

- Connecting with parallel interface, see page 2.8.
- Connecting with an USB interface, see page 2.17, "Installing USB Driver." To use the USB interface, you must also install the USB port driver.
- Connecting with an optional network interface, see page F.5, "Network Interface Card."

# Installing PS driver in Windows 98/Me

1 Insert the CD-ROM shipped with your printer into your CD-ROM drive.

If the CD-ROM drive does not automatically run:

Select **Run** from the **Start** menu, and type **x:\cdsetup.exe** in the Open box (where **x** is the drive letter for the CD-ROM drive), then click **OK**.

2 When the opening screen appears, select the appropriate language.

3 Click **Install the Samsung Software-II on your PC (PostScript)**.

4 The Welcome window opens. Click **Next**.

5 Select **Local printer**. Click **Next**.

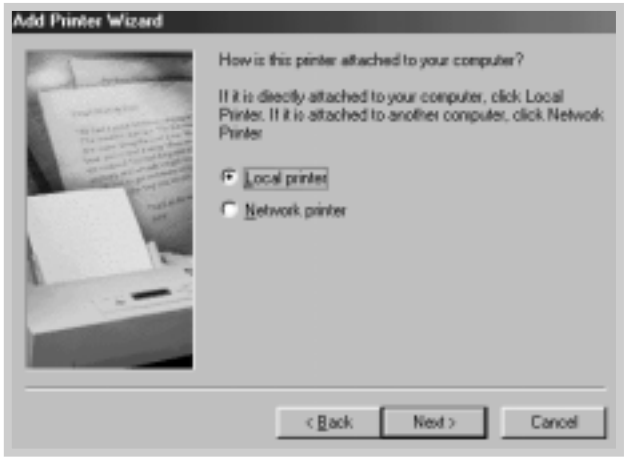


**Language Codes**

| Code | Language |
|---|---|
| DEU | German |
| ENG | English |
| ESN | Spanish |
| FRN | French |
| ITA | Italian |
| CHS | Chinese |

6 Click on **Have Disk**, click **Browse**, then choose:

- for Windows 9x, Me, **x:\1450\Eng**(or the desired language code.)**\ps\Win95_98\level 2**
- for Windows NT 4.0, **x:\1450\Eng**(or the desired language code.)**\ps\WinNT\level 2**

where **x** is the drive letter for the CD-ROM drive, then click **OK**.

7 The files are copied into the appropriate directory.

**Note:** When you install the driver, if the dialog box prompting you to insert the Windows CD appears, insert the Windows CD-ROM shipped with your printer into your CD-ROM drive. Click **Browse**, and then select CD-ROM drive or click **OK**.

8 Click **Next**.

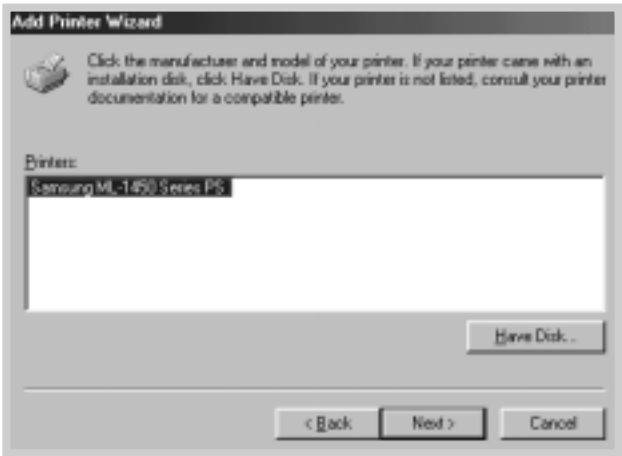


9 Click **Next**.

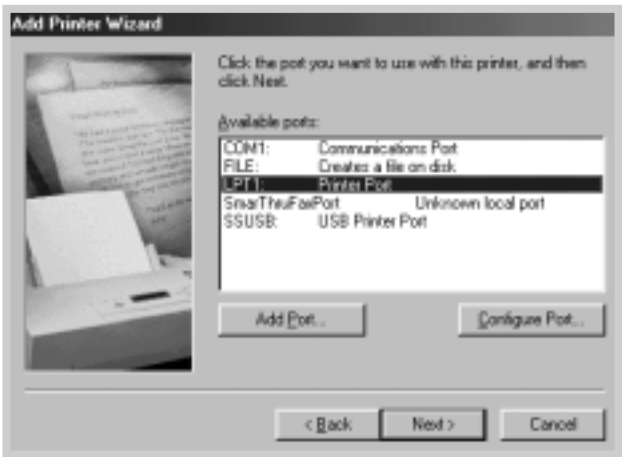

10 Click **Next**.

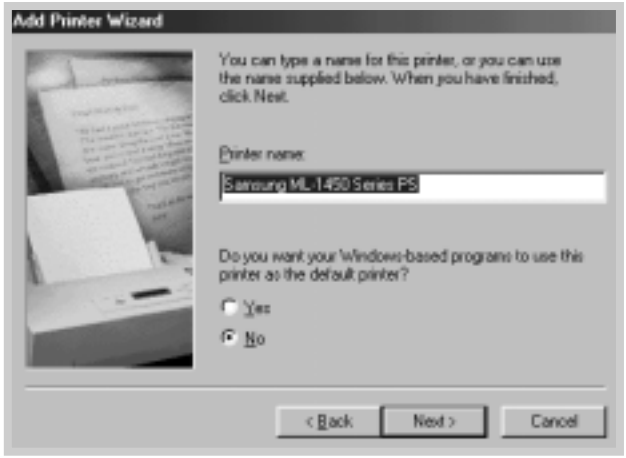


11 Click **Finish**.

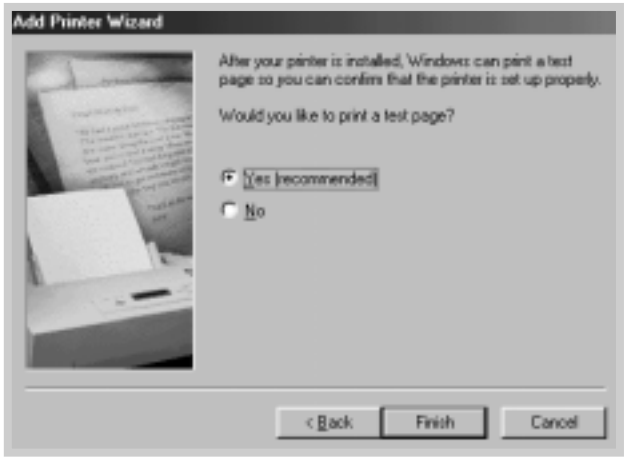


D

12 Click **Finish**.

# Installing PS driver in Windows 2000/XP/NT

1 Insert the CD-ROM shipped with your printer into your CD-ROM drive.

If the CD-ROM drive does not automatically run:

Select **Run** from the **Start** menu, and type **x:\cdsetup.exe** in the Open box (where **x** is the drive letter for the CD-ROM drive), then click **OK**.

2 When the opening screen appears, select the appropriate language.

3 Click **Install the Samsung Software-II on your PC (PostScript)**.

4 The Welcome window opens. Click **Next**.

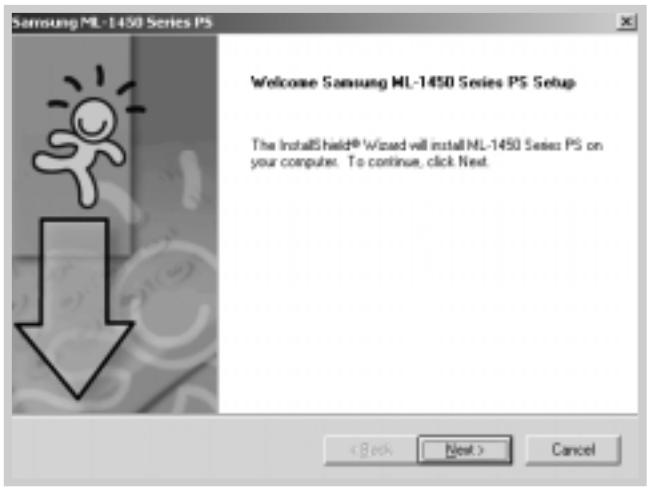


D

5 The files are copied into the appropriate directory.

6 Click **Finish**.

# Uninstall PS Driver

1 From the **Start** menu, select **Programs**.

2 Select **Samsung ML-1450 Series**, and then **Samsung ML-1450 Series PS Driver Maintenance.**

3 The Samsung ML-1450 Series PS Maintenance dialog box appears. Check **Remove** and then click **Next**.

4 When you are asked to confirm your selection, click **OK**.

5 The Samsung ML-1450 Series PS driver and all of its components are removed from your computer.

6 Click **Finish**.

# Accessing the PS Printer Driver Features

Certain printer features are not available in this PS driver. Refer to "Printer Driver Features" on page 2.15.

The printer automatically switches between PS and SPL printer languages depending on the driver you have selected.

## Opening the Printer Properties Window

The properties window for the Windows PostScript printer driver can be opened from the Printers folder or an application.

**To open the properties window from the Printer folder:**

1. Click the Windows **Start** button.
2. Select **Settings** then **Printers** to open the Printers window.
3. Select **Samsung ML-1450 Series PS**.
4. Click the right mouse button and select **Properties** to open the properties window.

**To open the properties window from inside an application:**

1. From the **File** menu, select **Print** to open the Print dialog box.
2. Make sure that **Samsung ML-1450 Series PS** is selected in the **Name** drop-down list.
3. Click **Properties** to open the properties window.

APPENDIX E

# Using Your Printer on a Network

If you work in a networked environment, the printer can be shared by other users on the network. ML-1451N printer are network printers and can be connected to the network via direct attachment to an external print server.

This appendix provides information on the following topics:

- About sharing the Printer on a Network
- Setting Up a Locally Shared Printer
- Setting Up a Network-Connected Printer

# About Sharing the Printer on a Network

If you work in a networked environment, you can connect the ML-1450 series printer to your network.

## Locally Shared

You can connect the printer directly to a selected computer (called the "host computer") on the network. The printer can then be shared by other users on the network through a Windows 9x, Me, 2000, XP or NT 4.0 network printer connection.

## Network-Connect

If an option network card was installed on your printer (see page F.5 for information on installing the option network card in your printer) or if you have a ML-1451N printer, the printer can be connected to the network via direct attachment to an external print server.

## Printing Across a Network

Whether the printer is locally connected or network connected, you need to install the ML-1450 series printer software on each computer that will print documents to the ML-1450 series printer.

# Setting Up a Locally Shared Printer

## Windows 98/Me

### Setting Up Host Computer

1 Start Windows.

2 From the **Start** menu, select **Control Panel**, and double-click on the **Network** icon.

3 Check the **File and Print Sharing** box, then click **OK**. Close the window.

4 Click **Start** and select **Printers** from **Settings**, then double-click your printer name.

5 Select **Properties** in the **Printers** menu.

6 Click the **Sharing** tab, then check the **Shared As** box. Fill in the Shared Name field, then click **OK**.

### Setting Up Client PC

1 Right-click **Start**, and select **Explorer.**

2 Open your network folder in the left column.

3 Right-click the shared name, and select **Capture Printer Port**.

4 Select the port you want, check the **Reconnect at log on** box, then click **OK**.

5 From the **Start** menu, select **Settings**, then **Printers**.

6 Double-click your printer icon.

7 From the **Printers** menu, select **Properties.**

8 Press the **Details** tab, select the printer port, then click **OK**.

# Windows 2000/XP/NT

## Setting Up Host Computer

1 Start Windows.

2 From the **Start** menu, select **Settings**, then **Printers**. (Windows 2000)
From the **Start** menu, select **Printers and Faxes**. (Windows XP)

3 Double-click your printer icon.

4 From the **Printers** menu, select **Sharing.**

5 Check the **Shared As** box. (Windows 2000)
Check the **Share this printer** box. (Windows XP)

Fill in the Shared Name field, then click **OK**.

## Setting Up Client PC

1 Double-click desktup network icon**.** (Windows 2000)
Double-click desktup Explorer icon**.** (Windows XP)

2 Open your network folder.

3 Click your printer icon, and check the printer course.

4 From the **Start** menu, select **Settings**, then **Printers**. (Windows 2000)
From the **Start** menu, select **Printers and Faxes**. (Windows XP)

5 Double-click your printer icon.

6 From the **Printers** menu, select **Properties.**

7 Press the **Ports** tab, click **Add Port**.

8 Select **Local port**, and click **New Port**.

9 Fill in the Enter a port name field, enter the printer course **3**.

10 Click **OK**, and click **Close** .

11 Click **Apply**, and click **OK** .

# Setting Up a Network-Connected Printer

To use ML-1450 series printer as a network printer, you must install an optional network card in your printer. See page F.5 for information on installing network card. If you have ML-1451N printer, you do not need to install the network card. The Samsung ML-1451N printer are shipped with the network card.

After the network card is installed, you must set up your printer as a network printer using the documentation and Samsung SyncThru software provided with the network card.

APPENDIX F

# Printer Options

Your printer is a full-featured laser printer that has been optimized to meet most of your printing needs. Recognizing that each user may have different requirements, however, Samsung makes several options available to enhance the printer's capabilities.

This appendix provides information on the following topics:

- Precautions
- Memory and PostScript SIMMs
- Network Interface Card
- Paper Tray 2

# Precautions

## DISCONNECT THE POWER CORD:

Never remove the printer control board while the printer is plugged in.

To avoid the possibility of electrical shock, always disconnect the power cord when installing or removing ANY internal or external printer option.

## DISCHARGE STATIC ELECTRICITY:

The control board and internal printer options (Memory SIMM, PS SIMM, Network interface) are sensitive to static electricity. Before installing or removing an internal option, discharge static electricity from your body by touching something metal, such as the metal back plate on any device plugged into a grounded power source. If you walk round before finishing the installation, discharge any static electricity once again.

# Memory and PostScript SIMMs

Additional printer memory and the PostScript option are provided on SIMMs (single in-line memory modules). This procedure is applicable to either option.

**Notes:**

- Since PostScript setting requires 12 MB of printer memory and the ML-1450 comes with 4 MB standard, installation of the PS SIMM requires installation of a 8 MB SIMM memory as well.
- ML-1451N has 16 MB RAM standard, so additional memory is not required to install option PS SIMM.

**1** Turn the printer power off and unplug all cables from the printer.

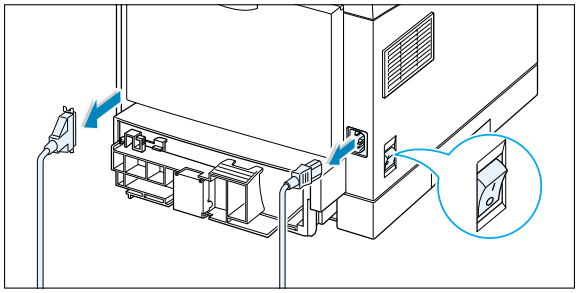

**2** Remove the two screws on the rear of the printer, then remove the control board cover.

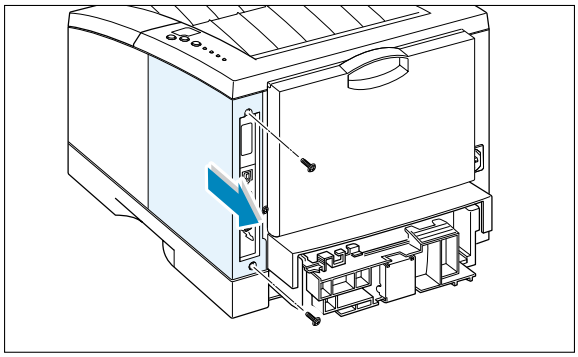

**3** Locate the PS SIMM slot (the lower slot on the left as shown) and the memory SIMM slot (the upper slot) on the control board. They are not interchangeable.

- To install the memory SIMM, continue with Step 4.
- To install the PS SIMM, go to Step 6.

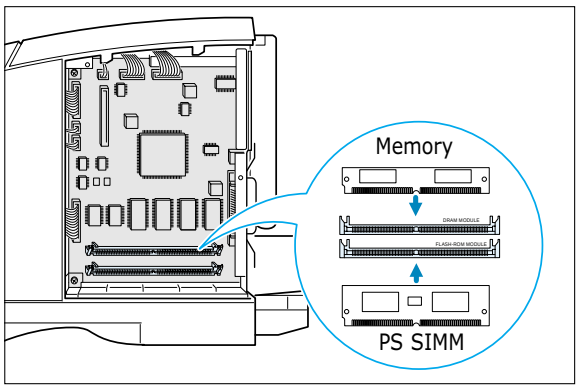

**4** Hold the memory SIMM so that the notch ❶ and the connection point ❷ are aligned with the slot as shown, and insert the SIMM all the way into the upper slot labeled **DRAM MODULE** at a 45 degrees angle.

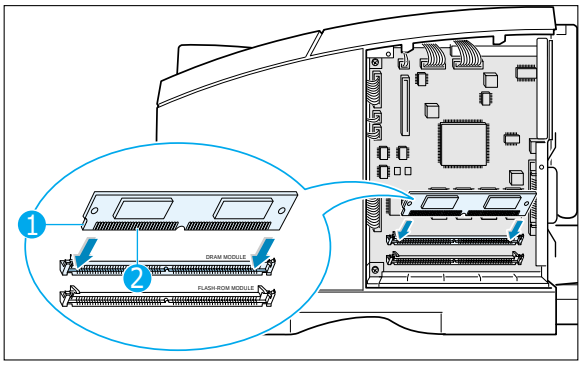


**5** Rotate it up until it snaps into place.

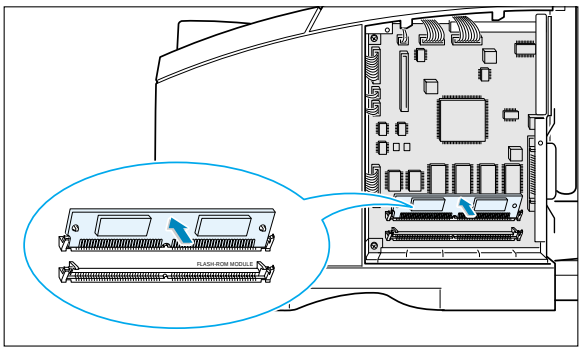


**6** Hold the PS SIMM so that the notch ❶ and the connection point ❷ are aligned with the slot as shown, and insert the SIMM all the way into the lower slot labeled **FLASH-ROM MODULE** at a 45 degrees angle.

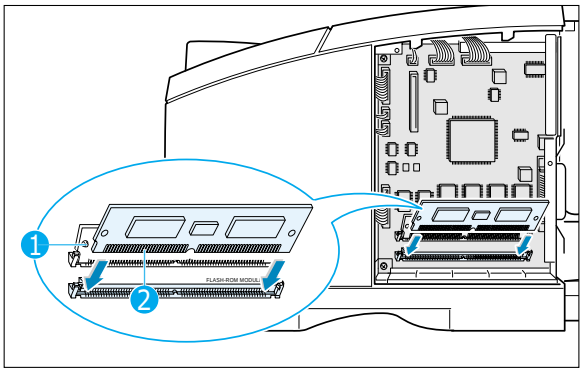


**7** Rotate it up until it snaps into place.

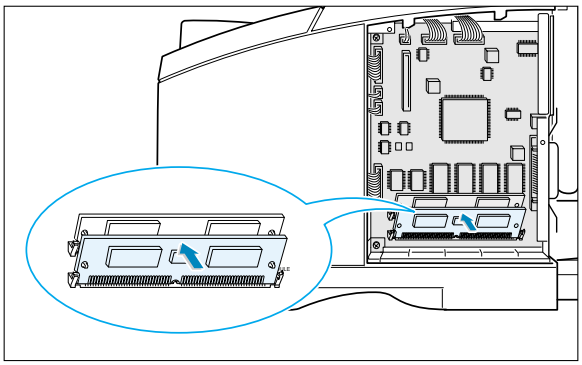

**8** Make sure that the SIMMs are secured in place by the metal clips and pins on both sides of the connectors.

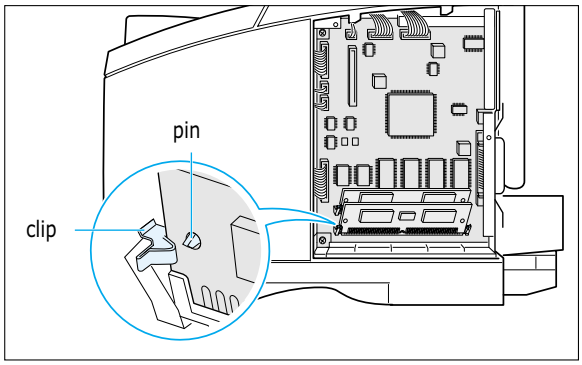


**9** Reconnect the power cord and printer cable, then turn the printer on.

**Note:** For PostScript driver installation and usage information on a Macintosh system, refer to Appendix B, “Using Your Printer with Macintosh.” For PS printing on a Windows system, refer to Appendix D, “Using Windows PostScript Driver.”

# Network Interface Card

Review the precautions on page F.1 and then follow this procedure to install the Network card option in your printer.

**1** Unpack the network printer card. You should find the following items.

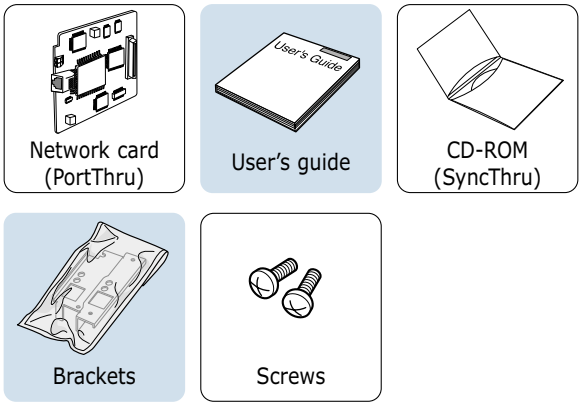


**2** Two brackets come with the network card. Select the long bracket and attach it to the network card with two screws provided.

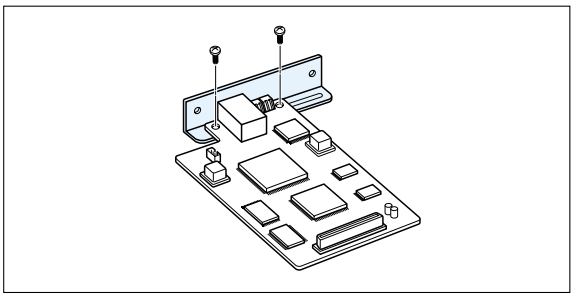

**3** Turn the printer power off and unplug all cables from the printer.

**4** Remove the two screws on the back of the printer, then remove the control board cover. See the figure on page F.2.

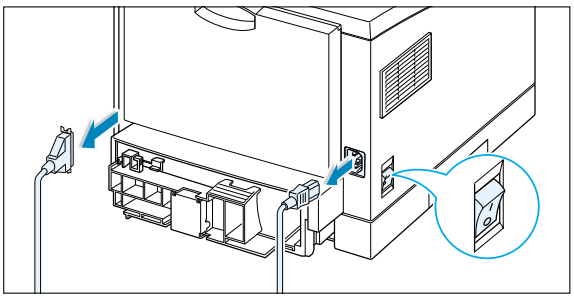

**5** Remove the two screws, then remove the plate.

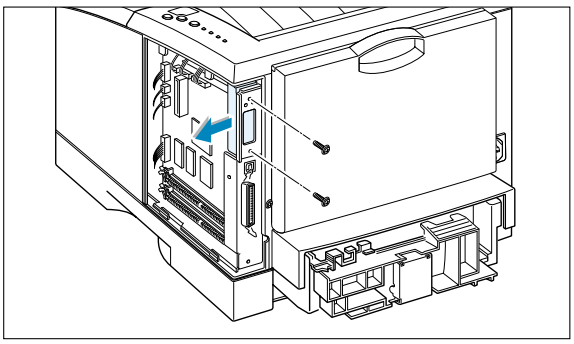

**6** Align the connector on the network card with the connector on the control board. Push the card firmly into the connector until it is completely inserted in place.

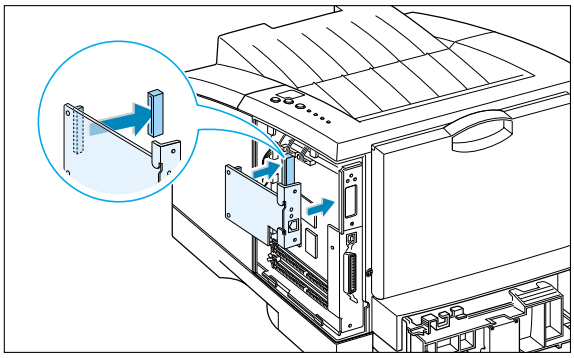

**7** Tighten the two screws as shown.

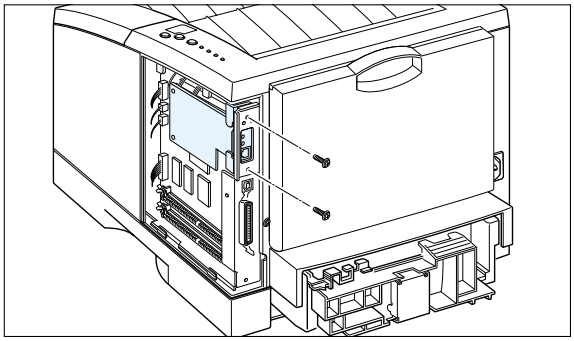

**8** Tighten the two screws, then replace the plate.

**9** Reconnect the power cord and network cable, then turn the printer on.

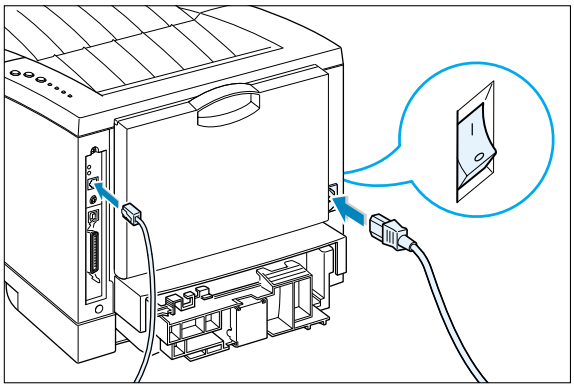

**Note:** For information on configuring and using the printer on a network environment, refer to the documentation provided with the network card option.

# Paper Tray 2

You can increase the paper handling capacity of your printer by installing the optional Tray 2. The optional paper tray consists of two components; the **support unit** and **paper tray**.

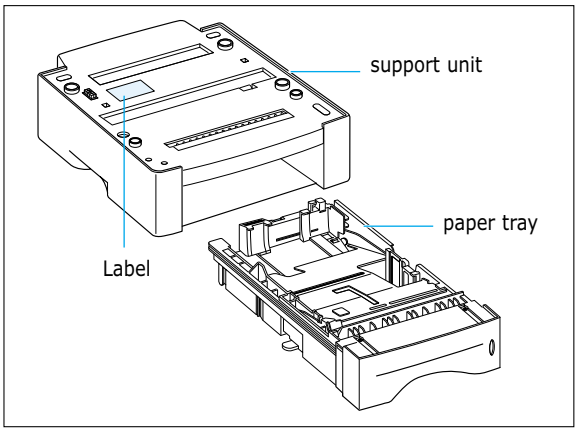


**Note:** Be sure you check the **label** before using the optional Tray 2. (For use with ML-1450 Series only)

**1** Turn off the printer and unplug all cables from the printer.

**2** Observe the location of the support unit's connector and tabs.

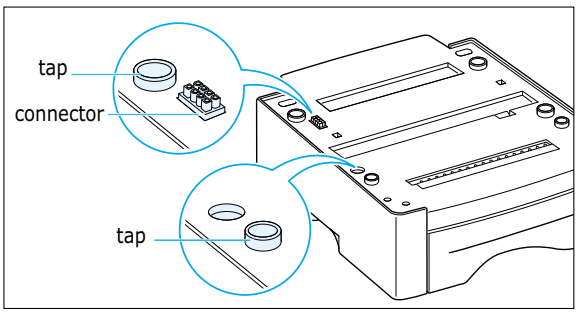


**3** Align the printer with the support unit and lower it into place on the tabs and connector.

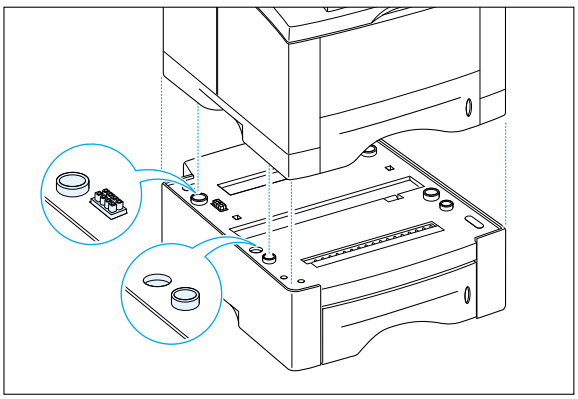

**4** Load paper in Tray 2. For information on loading paper in the tray, see page 2.5.

**5** Reconnect the cables, then turn the printer on.

**Note:** To print from Tray 2, you must configure the printer driver from your application prior to printing. To access the printer driver, see page 5.2.

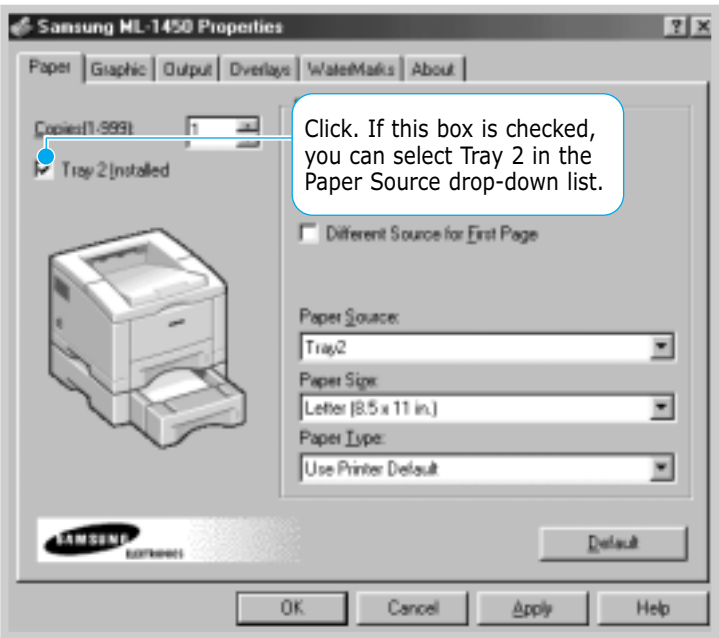

# Memo

APPENDIX G

# Using Your Printer in Linux

You can use Samsung ML-1450 Series printer in Linux environment.

This appendix provides information on the following topic:

◆ Linux Driver Installation

# Linux Driver Installation

This Linux driver is designed for the Samsung ML-1450 Series printer and supports Linux Red Hat 6.0 or higher and Intel Linux. If your Linux version is not included, this driver might not work properly.

- Install Setup Script file configuration
  a. /cdrom/linux/install.sh
  b. /cdrom/linux/ssprt.db
  c. /cdrom/linux/readme.txt

## Installation

To install the driver, open the x terminal screen and take the following steps:

### 1. Mount the CD-ROM drive.

**Note:** To mount the CD-ROM drive, you must be a super user or must be authorized to mount the CD-ROM by the super user. If you fail to mount the CD-ROM drive, ask the system administrator.

To mount the CD-ROM drive:

1. Insert the Samsung ML-1450 Series CD-ROM into the CD-ROM drive.

2. Mount the CD-ROM drive under a directory like **/mnt** in order to access the files on the CD-ROM:
   **>mount -t iso9660 /dev/cdrom /mnt/cdrom**

### 2. Install setup script.

For details on installing the setup script, refer to the **/cdrom/linux/readme.txt** file.

Add the driver to the printer list by typing in:
**/cdrom/linux>install.sh** (or)
**/cdrom/linux>./install.sh** (if the path of the current working directory is not determined.)

## 3. Set up the printer filter.

To set up:

1. Run **printtool** at x terminal.
2. To add the printer driver, click the **Add** button.
3. In the Add a Printer Entry window, decide the printer type you will use. Select **Local Printer** if you have a PC-connected printer.
4. Click the **OK** button.
5. If the **Info** button appears, ignore it, then click the **OK** button.
6. The Edit xxxx Entry window opens (where xxxx is the printer type you have selected at step 3).

   If you are not an advanced user, do not change the **Names/Spool Directory/File Limit in Kb/Printer Device** option.
7. Click the **Select** button in the **Input Filter** to access filter setup.
8. Select **Samsung Printer PCL5e Compatible** for the Printer Type item. Then select the default resolution and paper size.
9. To save the setting, press the **OK** button.
10. In the Edit xxxx Entry window, press the **OK** button to complete the printer driver installation.
11. You can find that the printer driver is added to the driver window. Select **Quit** from the **PrintTool** menu.

# INDEX

## Numeric

2-sided printing 5.7

## A

All text to Black 5.19

## B

booklet printing 5.13

## C

cancel, print job 5.5
Cancel/Reprint button 3.2
card stock, print 4.17
clean, printer 6.4
clean sheet, print 7.6
components 1.4
configuration page, print 7.6
control panel
  buttons 3.1
  lights 3.4
custom-sized media, print 4.17

## D

Darkness 5.19
Dark text 5.19
Data light 3.4
Demo button 3.3
demo page, print 2.9, 7.6
driver
  access 5.1
  features 2.15
  install 2.12
  remove 2.16
  repair 2.16

## E

envelopes, print 4.12
error messages 7.22

## F

face-down tray 4.4
face-up tray 4.4
features 1.1

## G

graphic properties 5.18
  all text to black 5.19
  darkness 5.19
  dark text 5.19
  power save mode 5.19
  reprint 5.20
  reprint when jam 5.20
  resolution 5.18
  SRT mode 5.19

install
Linux driver G.1
PPD file for windows D.1
PPD file for macintosh B.10
printer software, parallel cable 2.12
printer software, USB cable 2.17
remote control panel for DOS C.2
toner cartridge 2.3

## J

jam see *paper jam*

## L

labels, print 4.14
letterhead, print 4.16
load, paper
in the multi-purpose tray 4.8
in tray 1 or the optional tray 2 2.5
using the manual feed 4.10
Linux driver G.1

## M

Macintosh
connecting network interface B.3
connecting USB interface B.2
install PCL driver B.4
install PPD file B.10
solving common problems 7.16
system requirements B.1
manual 2-sided printing 5.7
manual duplexing 5.7
manual feed
loading paper 4.10
paper source setting 5.3
Manual light 3.5
memory, option F.2
multi-purpose tray
loading paper 4.8
paper source setting 5.3
multiple pages on one sheet, print 5.10

## N

network interface
install network card F.5
set up a locally shared printer E.2
sharing the printer on a network E.1
n-up printing 5.10

## O

option
memory SIMM F.2
network interface card F.5
paper tray 2 F.7
PS SIMM F.2
orientation 5.3
output tray, select 4.4
rear 4.4
top 4.4
overlay, print 5.24

## P


paper
  acceptable size and capacities 4.2, A.3
  choose 4.1
  guidelines 4.3, A.4
  load 2.5, 4.6
  specifications A.2
  storage environment A.6
paper jam, clear 7.7
  in the optional Tray 2 7.14
  input area 7.10
  inside the printer 7.12
  output area 7.7
  tips for avoiding paper jams 7.15
paper level indicator 4.6
Paper light 3.5
paper orientation, setting 5.3
paper out, indicator 7.22
paper source, setting 5.3
paper tray
  change paper size in tray 2.6
  load paper 2.5
  optional Tray 2 F.7
paper type, setting 5.3
parallel, connection 2.8
poster, print 5.16
postscript 3 emulation 1.2
  access windows PS driver D.3
  install PPD file for Macintosh B.4, B.10
  install PPD file for windows D.1
  problem solving 7.27
print media see *paper*
print quality problem, solving
  back of printouts dirty 7.20
  background scatter 7.19
  black pages 7.20
  character voids 7.21
  checklist 7.16
  curl or wave 7.20
  dropouts 7.17
  grey background 7.18
  horizontal stripes 7.21
  light or feded print 7.16
  loose toner 7.21
  misformed characters 7.19
  page skew 7.19
  toner smear 7.18
  toner specks 7.17
  vertical lines 7.17
  vertical repetitive defects 7.18
  wrinkles or creases 7.20
printer light patterns 7.22
printer driver see *driver*
printer software, install 2.12
printing
  booklets 5.11
  cancel 5.5
  cleaning sheet 7.6
  configuration page 7.6
  demo page 7.6
  fitting to a selected paper size 5.12
  from windows application 5.1
  from DOS applications C.1
  general problems, solving 7.2
  help 5.5
  multiple pages on one sheet 5.10
  on both sides of the paper 5.7
  on different paper for first page 5.28
  poster 5.16
  quality problems, solving 7.16
  reprinting 5.29
  scaling 5.11
  using page overlay 5.24
  watermarks 5.21
  with macintosh B.5

## P (continued)

problem, solving
  common macintosh problems 7.26
  common windows problems 7.25
  error messages 7.22
  general 7.2
  paper jam 7.7
  print quality 7.16
  PS errors 7.27
  Troubleshooting checklist 7.1
PS see *postscript 3 emulation*

## Q

quality, problems 7.16

## R

Ready Mode 3.4
rear output tray 4.4
remote control panel
  install C.2
  use C.5
  remove C.4
remove
  printer driver 2.16
  PS driver D.4
  Remote control panel C.4
reprint 5.20
  reprinting the last page 5.29
  reprint when jam 5.20
resolution 5.18

## S

scaling your document 5.11
setup printer chapter 2
specifications
  paper A.2
  printer A.1
SRT mode 5.19
system error 7.24

## T

toner cartridge
  cleaning sheet 6.5
  install 2.3
  life expectancy 6.1
  recycle 6.1
  redistribute toner 6.2
  save toner 5.6, 6.1
  storage 6.1
Toner Save button 3.1. 5.6
top output tray 4.4
transparency, print 4.15
troubleshooting see *problem, solving*
tray 1 see *paper tray*

## U

uninstall, driver 2.16
unpacking 2.1
USB cable
  setup in windows 2.17
  setup in macintosh B.2

## W

watermark, print 5.21
WIN RCP see *remote control panel*

Home

Visit us at:
**http://www.samsungprinter.com**