SAMSUNG

SAMSUNG DIGITall
everyone's invited™

LASER PRINTER

ML-1650 Series

SAMSUNG LASER PRINTER

User's Guide

Home Visit us at:
http://www.samsungprinter.com

P/N. JC68-00xxxA Rev.1.00

This manual is provided for information purposes only. All information included herein is subject to change without notice. Samsung Electronics is not responsible for any damages, direct or indirect, arising from or related to use of this manual.

© 2001 Samsung Electronics Co., Ltd. All rights reserved.

- ML-1650, ML-1651N and Samsung logo are trademarks of Samsung Electronics Co., Ltd.
- Centronics is a trademark of Centronics Data Computer Corporation.
- PCL and PCL6 are trademarks of Hewlett-Packard Company.
- IBM and IBM PC are trademarks of International Business Machines Corporation.
- Apple, AppleTalk, TrueType, Laser Writer and Macintosh are trademarks of Apple Computer, Inc.
- Microsoft, Windows, Windows 9x, Windows Me, Windows 2000, Windows NT and MS-DOS are registered trademarks of Microsoft Corporation.
- PostScript and PostScript 3 are a trademark of Adobe Systems Inc.
- All other brand or product names are trademarks of their respective companies or organizations.

Contents

Chapter 1 Introduction

Special Features — 1.1
Printer Components — 1.3

Chapter 2 Setting Up Your Printer

STEP 1: Unpack Your Printer — 2.1
STEP 2: Install the Toner Cartridge — 2.2
STEP 3: Load Paper — 2.4
STEP 4: Connect to the Computer with a Parallel Cable — 2.7
STEP 5: Turn on the Printer — 2.8
STEP 6: Print a Demo Page! — 2.8
STEP 7: Install the Printer Software — 2.9

Chapter 3 Using the Control Panel

Control Panel Buttons — 3.1
Control Panel Lights — 3.4

Chapter 4 Print Media

Choosing Paper and Other Media — 4.1
Selecting the Output Tray — 4.4
Loading Paper — 4.6
- Using Tray 1 or the Optional Tray 2 — 4.6
- Using the Multi-Purpose Tray — 4.7
- Using the Manual Feed — 4.10

Printing on Envelopes — 4.12
Printing on Labels — 4.14
Printing on Transparencies — 4.15
Printing on Preprinted Paper — 4.16
Printing on Card Stock or Custom-sized Media — 4.17

Chapter 5 Printing Tasks

Printing a Document — 5.1
Using Toner Save Mode — 5.6
Printing on Both Sides of the Paper (Manual Duplexing) — 5.7
Printing Multiple Pages on One Sheet of Paper (N-Up Printing) – 5.10
Printing Booklets — 5.11
Printing on Different Paper for the First Page — 5.14
Fitting Your Document To a Selected Paper Size — 5.15
Printing Posters — 5.16
Setting Graphic Properties — 5.18
Printing Watermarks — 5.21
Using Page Overlay — 5.24

Chapter 6 Maintaining Your Printer

Maintaining Toner Cartridge — 6.1
Cleaning the Printer — 6.4

Chapter 7 Problem Solving

Troubleshooting Checklist — 7.1
Solving General Printing Problems — 7.2
Printing Special Pages — 7.6
Clearing Paper Jams — 7.7
Solving Print Quality Problems — 7.16
Troubleshooting Error Messages — 7.22
Common Windows Problems — 7.24
Common Macintosh Problems — 7.25
Troubleshooting PS Errors — 7.27

Contents (continued)

Appendix A Specifications

Printer Specifications — A.1
Paper Specifications — A.2

Appendix B Using Your Printer with a USB Cable

Installing the Printer Software — B.1
Frequently Asked Questions About USB — B.4

Appendix C Using Your Printer with Macintosh

Macintosh Installation — C.1
Using PCL Driver — C.5
Using PS Driver — C.10

Appendix D Printing from DOS Applications

About Remote Control Panel for DOS — D.1
Installing the Remote Control Panel for DOS Users — D.2
Selecting Print Settings — D.2

Appendix E Using Windows PostScript Driver

Setting Your Printer with the PS Option — E.1
Installing PPD Files — E.1
Accessing the PS Printer Driver Features — E.3

Appendix F Using Your Printer on Network

About Sharing the Printer on a Network ——— F.1
Setting Up a Locally Shared Printer ——— F.2
Setting Up a Network-Connected Printer ——— F.3

Appendix G Installing Software from Diskettes

Making Installation Diskettes ——— G.1
Installing Software from Diskette ——— G.3

Appendix H Printer Options

Precautions ——— H.1
Memory and PostScript DIMMs ——— H.2
Network Interface Card ——— H.5
Paper Tray 2 ——— H.7

Appendix I Using Your Printer in Linux

Linux Driver Installation ——— I.1

INDEX

Environmental and Safety Consideration

Laser Safety Statement

The printer is certified in the U.S. to conform to the requirements of DHHS 21 CFR, chapter 1 Subchapter J for Class I(1) laser products, and elsewhere, is certified as a Class I laser product conforming to the requirements of IEC 825.

Class I laser products are not considered to be hazardous. The laser system and printer are designed so there is never any human access to laser radiation above a Class I level during normal operation, user maintenance, or prescribed service condition.

WARNING

Never operate or service the printer with the protective cover removed from Laser/Scanner assembly. The reflected beam, although invisible, can damage your eyes.

CAUTION - INVISIBLE LASER RADIATION WHEN THIS COVER OPEN. DO NOT OPEN THIS COVER.

VORSICHT - UNSICHTBARE LASERSTRAHLUNG, WENN ABDECKUNG GEÖFFNET. NICHT DEM STRAHL AUSSETZEN.

ATTENTION - RAYONNEMENT LASER INVISIBLE EN CAS D'OUVERTURE.EXPOSITION DAN GEREUSE AU FAISCEAU.

ATTENZIONE -RADIAZIONE LASER INVISIBILE IN CASO DI APERTURA. EVITARE L'ESPOSIZIONE AL FASCIO.

PRECAUCION -RADIACION LASER IVISIBLE CUANDO SE ABRE. EVITAR EXPONERSE AL RAYO.

ADVARSEL. - USYNLIG LASERSTRÅLNING VED ÅBNING NÅR SIKKERHEDSBRYDERE ER UDE AF FUNKTION. UNDGÅ UDSAETTELSE FOR STRÅLNING.

ADVARSEL. - USYNLIG LASERSTRÅLNING NÅR DEKSEL ÅPNES. STIRR IKKE INN I STRÅLEN. UNNGÅ EKSPONERING FOR STRÅLEN.

VARNING - OSYNLIG LASERSTRÅLNING NÄR DENNA DEL ÄR ÖPPAND OCH SPÄRREN ÄR URKOPPLAD. BETRAKTA EJ STRÅLEN. STRÅLEN ÄR FARLIG.

VARO! - AVATTAESSA JA SUOJALUKITUS OHITETTAESSA OLET ALTTIINA NÄKYMÄTTÖMÄLLE LASERSÄTEILYLLE ÄLÄ KATSO SÄTEESEEN.

Ozone Safety

During normal operation, the ML-1650 Series printer produces ozone. The ozone produced does not present a hazard to the operator. However, it is advisable that the machine be operated in a well ventilated area.

If you need additional information about ozone, please contact your nearest Samsung dealer.

Power Saver

This printer contains advanced energy conservation technology that reduces power consumption when it is not in active use.

When the printer does not receive data for an extended period of time, power consumption is automatically lowered.

The energy star emblem does not represent EPA endorsement of any product or service.

Radio Frequency Emissions

FCC regulations

This device has been tested and found to comply with the limits for a Class B digital device, pursuant to Part 15 of the FCC rules. These limits are designed to provide reasonable protection against harmful interference in a residential installation. This equipment generates, uses and can radiate radio frequency energy and, if not installed and used in accordance with the instructions, may cause harmful interference to radio communications. However, there is no guarantee that interference will not occur in a particular installation. If this equipment does cause harmful interference to radio or television reception, which can be determined by turning the equipment off and on, the user is encouraged to try to correct the interference by one or more of the following measures:

(1) Reorient or relocate the receiving antenna.
(2) Increase the separation between the equipment and receiver.
(3) Connect the equipment into an outlet on a circuit different from that to which the receiver is connected.
(4) Consult the dealer or an experienced radio/TV technician for help.

CAUTION: Changes or modifications not expressly approved by the manufacturer responsible for compliance could void the user's authority to operate the equipment.

Canadian Radio Interference Regulations

This digital apparatus does not exceed the Class B limits for radio noise emissions from digital apparatus as set out in the interference-causing equipment standard entitled "Digital Apparatus", ICES-003 of the Industry and Science Canada.

Cet appareil numérique respecte les limites de bruits radioélectriques applicables aux appareils numériques de Classe B prescrites dans la norme sur le matériel brouilleur: "Appareils Numériques", ICES-003 édictée par l'Industrie et Sciences Canada.

Declaration of Conformity (European Countries)

Approvals and Certifications

The CE marking applied to this product symbolises Samsung Electronics Co., Ltd. Declaration of Conformity with the following applicable 93/68/EEC Directives of the European Union as of the dates indicated:

January 1, 1995: Council Directive 73/23/EEC Approximation of the laws of the member states related to low voltage equipment.

January 1, 1996: Council Directive 89/336/EEC (92/31/EEC), approximation of the laws of the Member States related to electromagnetic compatibility.

March 9, 1999: Council Directive 1999/5/EC on radio equipment and telecommunications terminal equipment and the mutual recognition of their conformity.

A full declaration, defining the relevant Directives and referenced standards can be obtained from your Samsung Electronics Co., Ltd. representative.

EC Certification

Certification to 1999/5/EC Radio Equipment & Telecommunications Terminal Equipment Directive (FAX)

This Samsung product has been self-certified by Samsung for pan-European single terminal connection to the analogue public switched telephone network (PSTN) in accordance with Directive 1999/5/EC. The product has been designed to work with the national PSTNs and compatible PBXs of the European countries:

In the event of problems, you should contact the Euro QA Lab of Samsung Electronics Co., Ltd. in the first instance.

The product has been tested against TBR21 and TBR 38. To assist in the use and application of terminal equipment which complies with this standard, the European Telecommunication Standards Institute (ETSI) has issued an advisory document (EG 201 121) which contains notes and additional requirements to ensure network compatibility of TBR21 terminals. The product has been designed against, and is fully compliant with, all of the relevant advisory notes contained in this document.

chapter 1

Introduction

Congratulations on the purchase of your ML-1650 series printer! This chapter provides information on the following topics:

- ◆ Special Features
- ◆ Printer Components

Special Features

1

Your new Samsung ML-1650 series printer is equipped with special features that improve print quality, giving you a competitive edge. You can:

Print with excellent quality and high speed

- Prints at **1200 dots per inch** (dpi). See page 5.19.
- Prints **16 pages-per-minute(A4 size), 17 pages-per-minute(Letter size)**.
- The **PCL 6** printer language enables fast printing performance.

Flexible paper handling

- A 100-sheet **Multi-Purpose Tray** supports letterheads, envelopes, labels, transparencies, custom-sized media, postcards, and heavy paper.
- Standard **550-sheet input tray** (Tray 1) and **optional 550-sheet input tray** (Tray 2) supports all standard sizes of paper.
- Two output tray: Select either **the top face-down output** or **the rear face-up output tray** for the most convenient access.
- **Straight-through paper path** capability from the Multi-Purpose Tray to the rear output tray.

Create professional documents

- Customizes your documents by using **Watermarks** such as "Confidential."
- Prints **Booklets**. This feature enables you to easily print the pages required to create books. Once printed, all you have to do is fold and staple the pages.
- Prints **Posters**. The text and pictures of each page of your document are magnified and printed across the selected sheet of paper. After the document has printed, trim off the white edges of each sheet. Tape the sheets together to form a poster.

Save time and money

- Allows you to use the **Toner Save** mode to save toner. See page 5.6.
- Allows you to print on both sides of the paper to save paper (**Manual Duplexing**). See page 5.7.
- Allows you to print multiple pages on one single sheet of paper to save paper (**N-Up printing**). See page 5.10.
- Preprinted forms and letterheads can be printed on plain paper. See 'Using Page Overlay' on page 5.24.
- One-touch **last page printing** is available when the printer is in ready mode.
- This printer automatically **conserves electricity** by substantially reducing power consumption when not printing.
- This printer meets **Energy Star** guidelines for energy efficiency.

Expand the printer capacity

- The ML-1650 series printer has 16 MB of memory which can be expanded to **144 MB**.
- **PostScript 3 Emulation*** (PS) DIMM adds PS printing.
- Optional **network interface** enables network printing.

OAK TECHNOLOGY

*PostScript 3 Emulation
IPS-PRINT_Printer language Emulation© Copyright 1995-2001, Oak Technology, Inc., All rights reserved

Print in various environments

- Prints in **Windows**, **DOS**, and **Macintosh**.
- Supports **Linux**.
- ML-1650 series printer comes with **Parallel, USB** and **network interface**.

Printer Features

Table below lists a general overview of features supported by the ML-1650 series printer.

	Network Card	PostScript DIMMs
ML-1650	N	N
ML-1651N	Y	N
ML-1652P	N	Y
ML-1653S	Y	Y

Printer Components

Front View

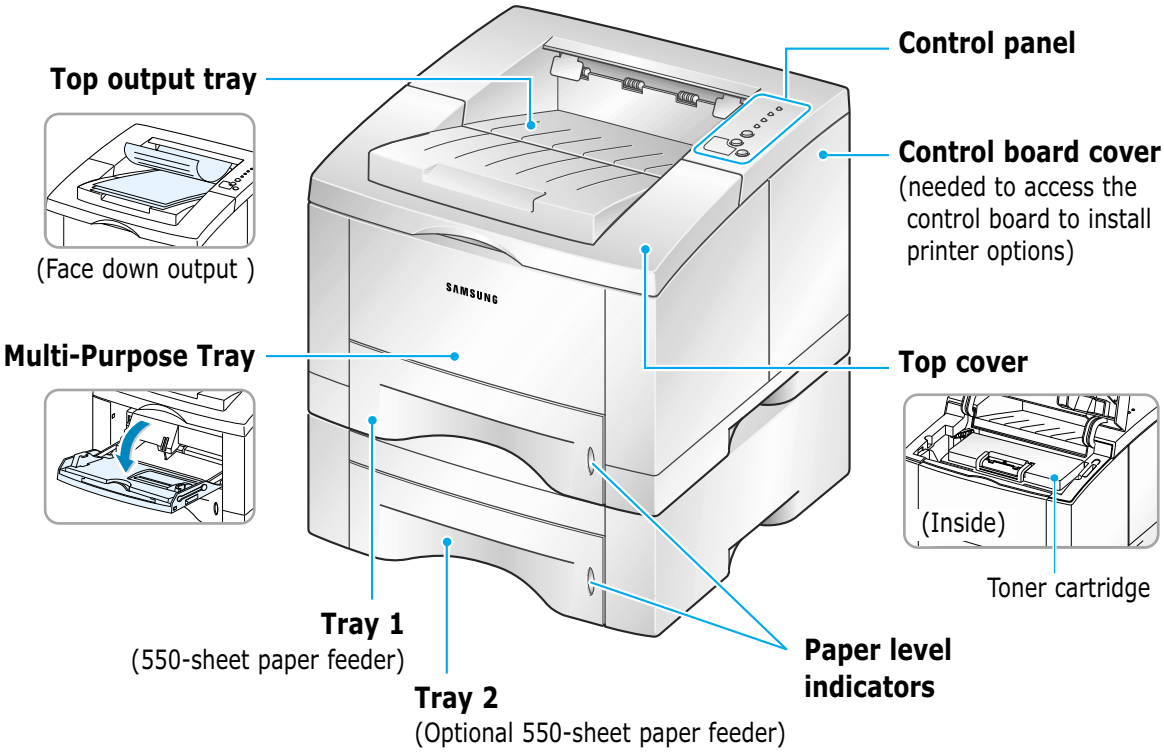

Rear View

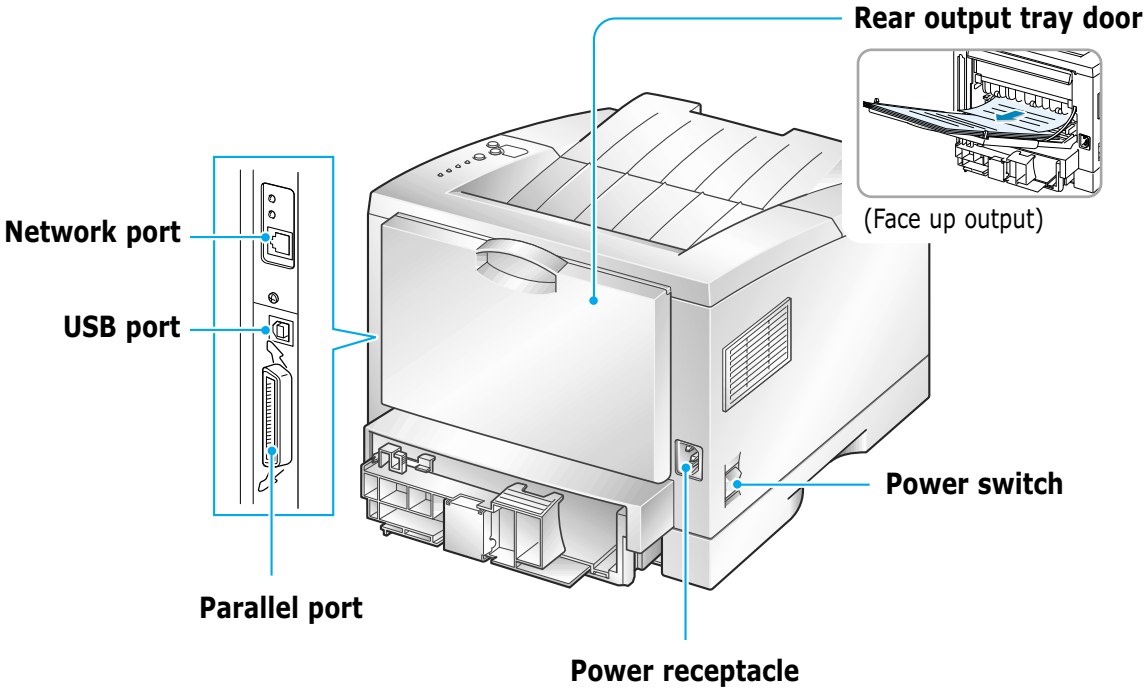
Rear output tray door
(Face up output)
Network port
USB port
Parallel port
Power switch
Power receptacle

chapter 2

Setting Up Your Printer

This chapter provides step by step information on setting up your printer. Topics included in this chapter are:

- ***STEP 1***: Unpack Your Printer
- ***STEP 2***: Install the Toner Cartridge
- ***STEP 3***: Load Paper
- ***STEP 4***: Connect to the Computer with a Parallel Cable
- ***STEP 5***: Turn on the Printer
- ***STEP 6***: Print a Demo Page!
- ***STEP 7***: Install the Printer Software

STEP 1 Unpack Your Printer

1 Remove the printer and all accessories from the packing carton. Make sure that your printer has been packed with the following items:

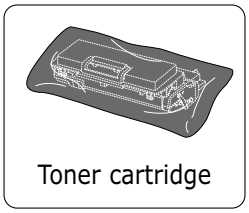
Toner cartridge

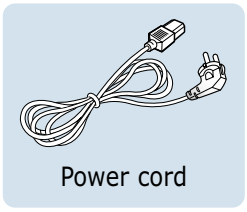
Power cord

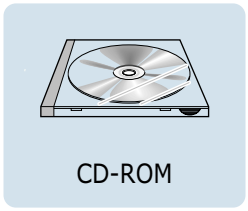
CD-ROM

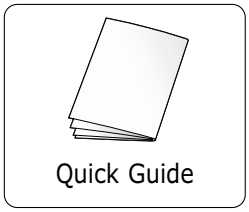
Quick Guide

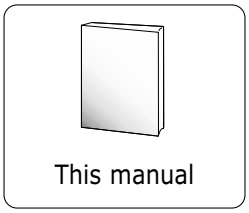
This manual

Notes:

- **If any items are missing or damaged, notify your dealer immediately.**
- **Components may differ from one country to another.**

2 Carefully remove all packing tapes from the printer.

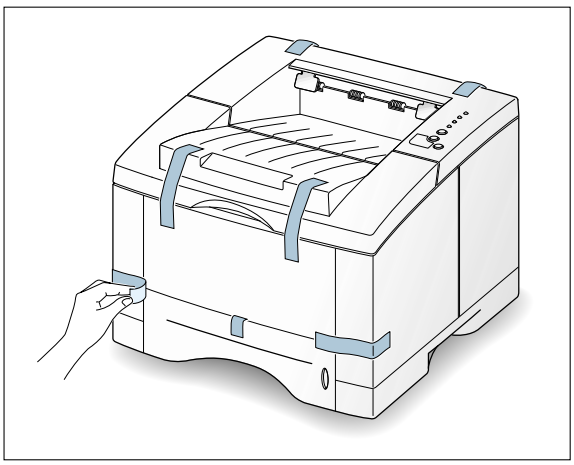

Selecting a Location

Select a level, stable place with adequate space for air circulation. Allow extra space for opening covers and trays. The area should be well-ventilated and away from direct sunlight or sources of heat, cold, and humidity. See the image below for clearance space. Do not set the printer close to the edge of your desk or table!

Clearance Space

Front: 482.6 mm(enough space so that trays can be removed)
Back: 320 mm(enough space to allow opening of the Back Cover)
Right: 100 mm
Left: 100 mm(enough space for ventilation)

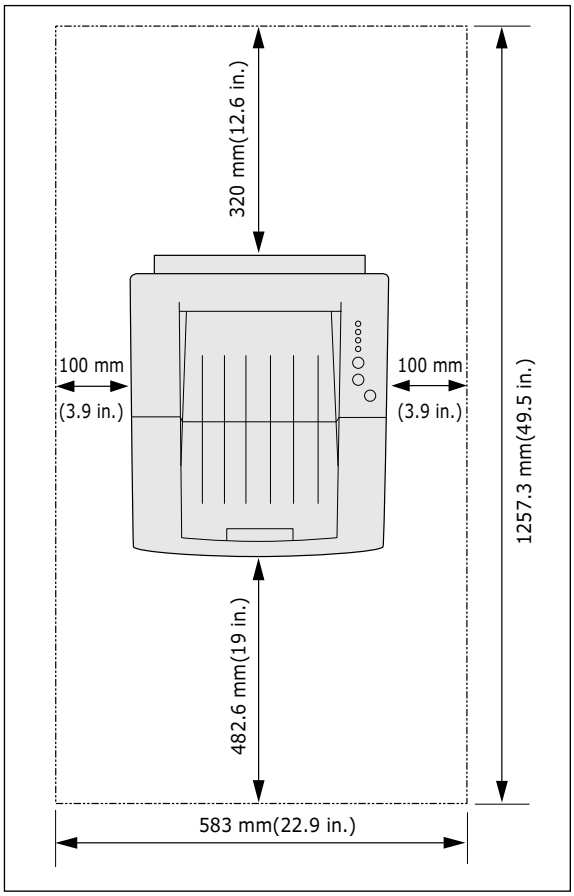

Install the Toner Cartridge

1 Open the top cover lid. Pull up on the handle to open the lid.

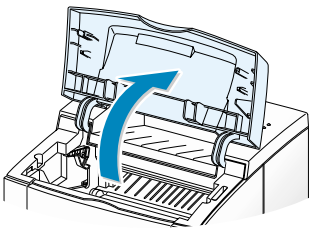

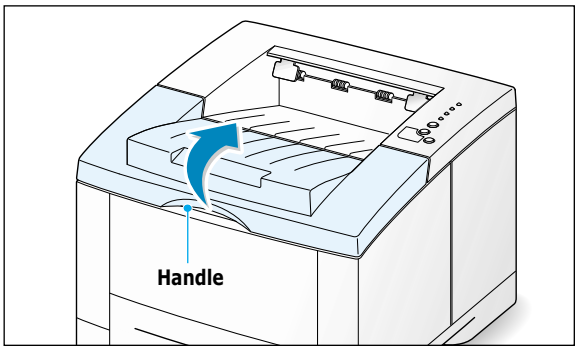

2 Carefully tear one end of the plastic bag.

Don't use a knife or other sharp objects as they might scratch the drum of the cartridge.

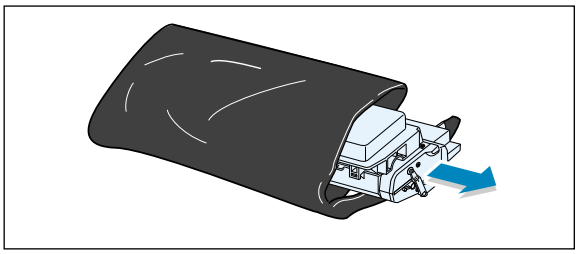

3 Locate the sealing tape at the end of the toner cartridge. Carefully pull the tape completely out of the cartridge. Discard the tape.

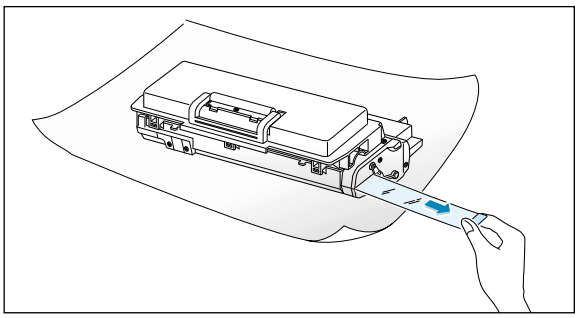

4 Gently shake the cartridge from side to side to distribute the toner evenly inside the cartridge.

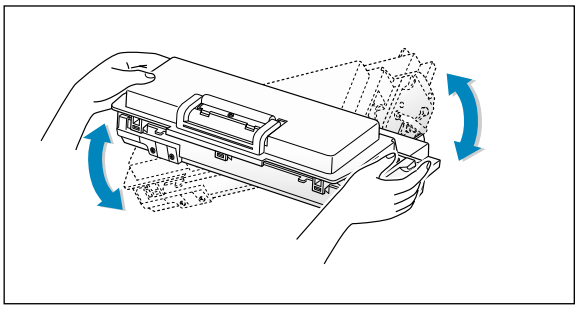

CAUTION:
To prevent damage, do not expose the toner cartridge to light for more than a few minutes. Cover it with a piece of paper if left exposed for more than a few minutes.

If toner gets on your clothing, wipe it off with a dry cloth and wash clothing in cold water. Hot water sets toner into fabric.

Install the Toner Cartridge

5 Locate the cartridge slots inside the printer, one on each side.

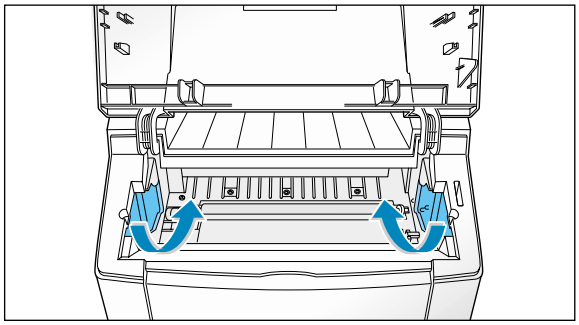

6 Grasp the handle and insert the cartridge in the printer until it drops into place.

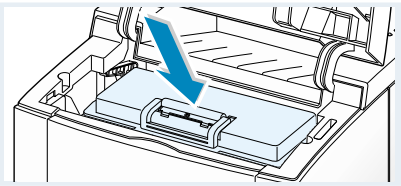

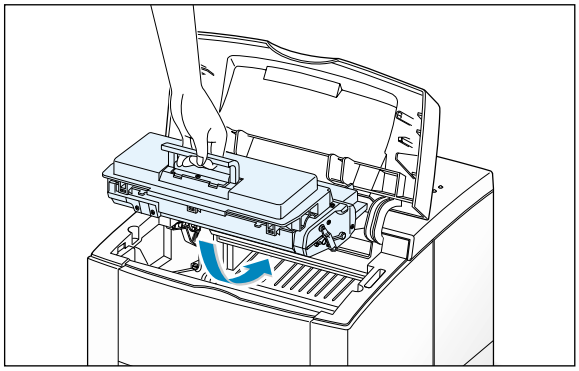

7 Close the top cover. Make sure that the cover is securely closed.

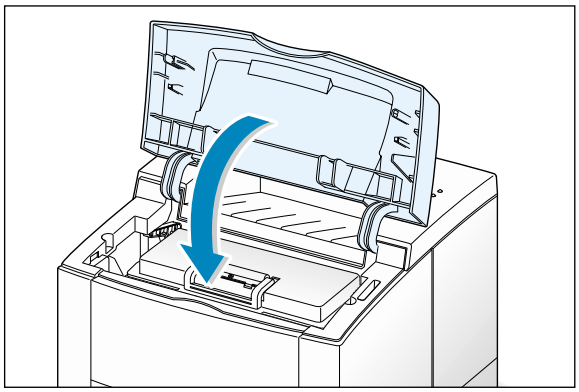

Note: **When printing text at 5% coverage, you can expect a toner cartridge life of approximately 8,000 pages (4,000 pages for the toner cartridge that is shipped with the printer).**

Load Paper

1 Pull the paper tray out of the printer.

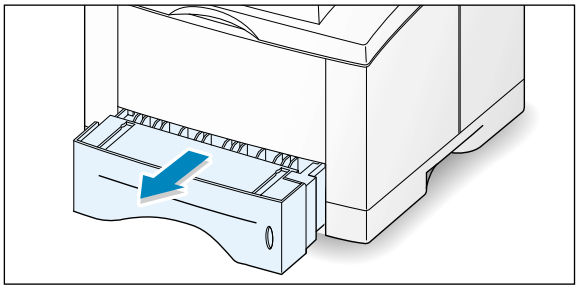

2 Push down on the metal paper lift plate to lock it in place.

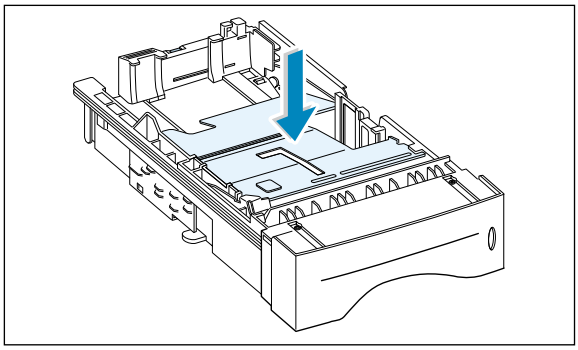

3 Load paper **with the print side facing down**.

Note: **You can load letterheads, or other print media using the same method.**

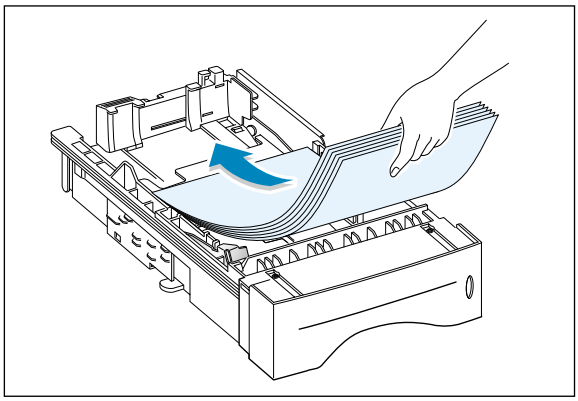

Make sure that all four corners are flat in the tray.

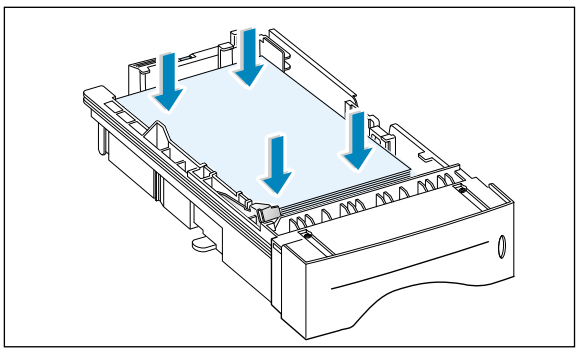

4 Make sure that the stack goes under the metal retaining clip Ⓐ and the plastic tabs on the end guides.
Pay attention to the paper limit make on the left inside wall of the tray.
Paper overloading may cause paper jams.

Note: If you want to change the paper size in the tray, refer to: "To Change Paper Size in Tray below."

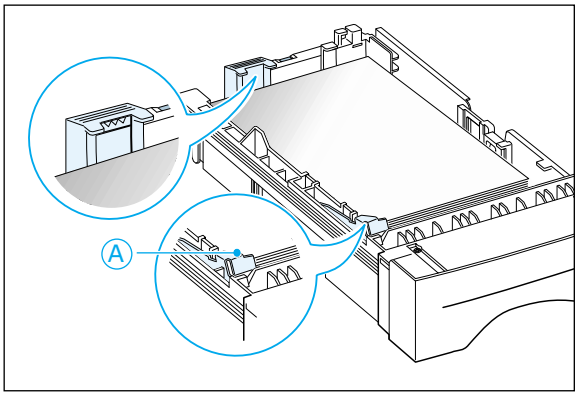

5 Slide the tray back into the printer.

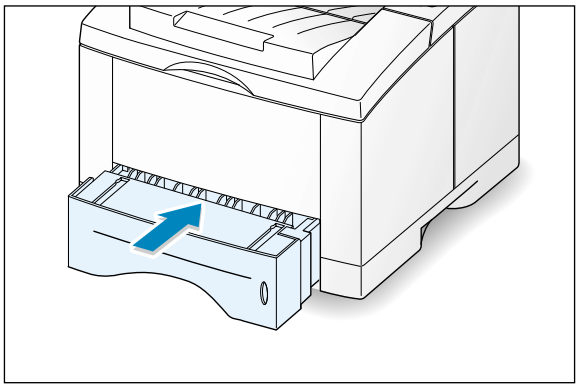

To Change Paper Size in Tray

1 Squeeze the metal tab on the rear paper guide to adjust for the paper length.

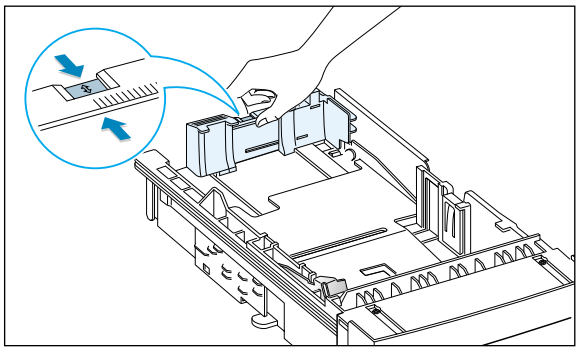

2 Adjust the paper length guide so the pointer matches the desired paper size.

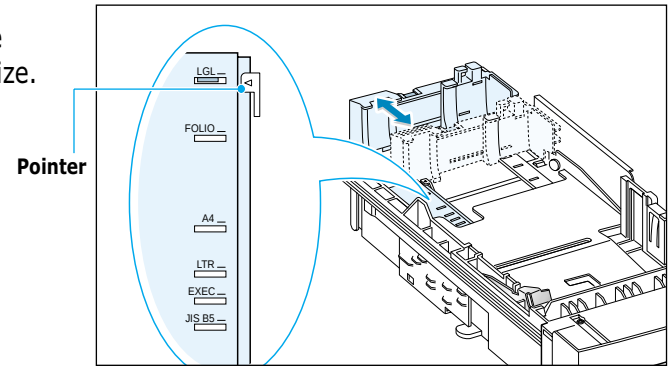

3 After loading paper, squeeze the side guide as shown and slide it to the left flush against the paper.

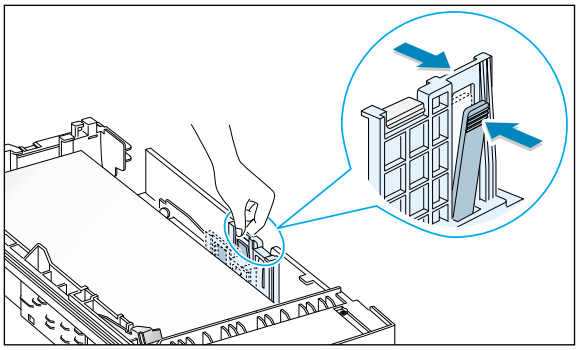

4 If necessary, use the rear width guide. Squeeze the rear width guide as shown and slide it to the left.

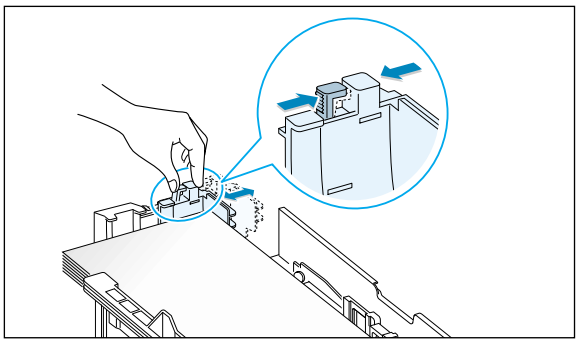

Notes:

- **Do not push the width guide far enough to cause the media to warp.**
- **If you do not adjust the width guide, it may cause a paper jam.**

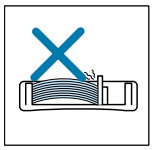
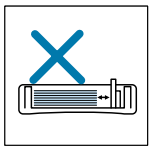

STEP 4

Connect to the Computer with a Parallel Cable

1 Make sure that both the printer and the computer are turned off.

2 Plug the parallel printer cable into the connector on the back of the printer.

Push the metal clips down to fit inside the notches on the cable plug.

3 Connect the other end of the cable to the parallel interface port on your computer, and tighten the screws.

See your computer documentation if you need help.

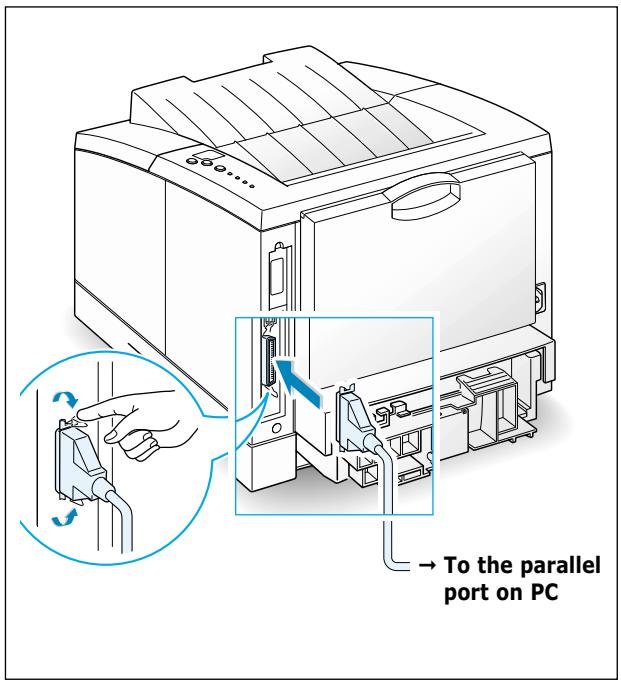

If you are using a USB interface

Go to Appendix B, "Using Your Printer with a USB Cable."

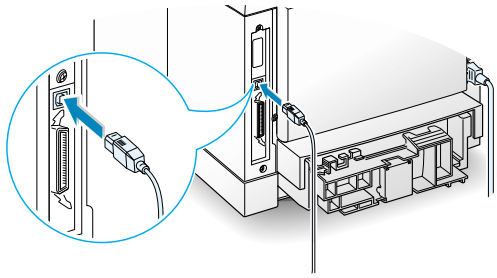

If you are using a network interface

Go to Appendix F, "Using Your Printer on Network."

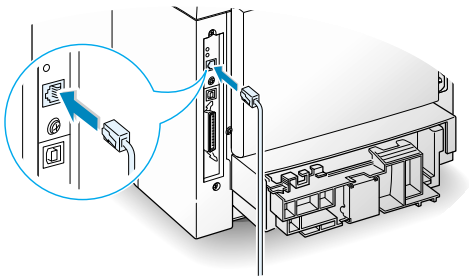

STEP 5 Turn on the Printer

1. Plug the power cord into the power receptacle on the back of the printer.
2. Plug the other end into a properly grounded AC outlet.
3. Turn on the power.

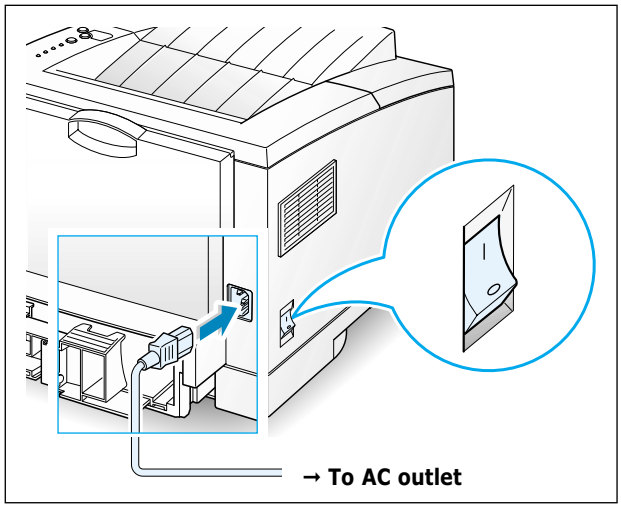

STEP 6 Print a Demo Page!

As the printer powers up, all the printer control panel lights turn on briefly. When only the **Data** light remains on, press and hold the **Demo** button.

Hold the **Demo** button down until all the lights blink (for about 2 seconds) and then release. The demo page will print.

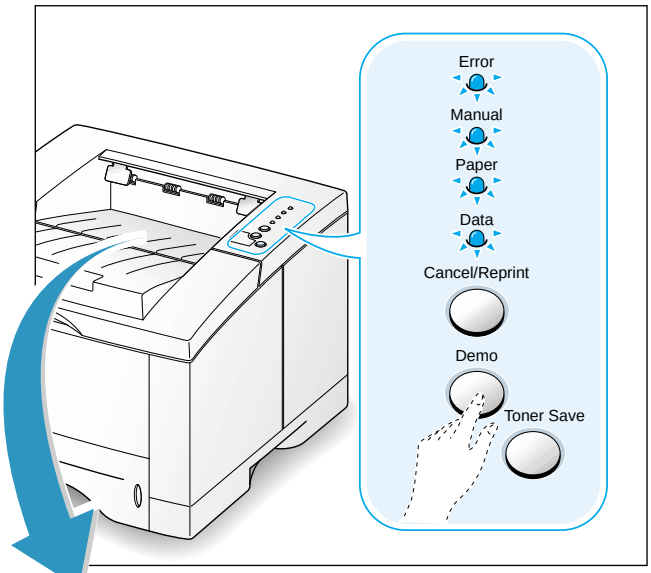

The demo page provides a sample of the print quality to help you verify that the printer is printing correctly.

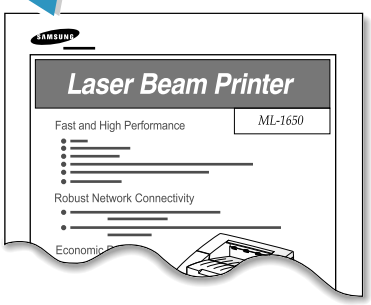

STEP 7

Install the Printer Software

Included with your printer is a CD-ROM containing the printer drivers for some of the most popular Windows software applications. To operate your printer, you must install a printer driver, which translates data from your application into data that the printer understands.

The CD-ROM shipped with your printer contains the following:

- **PCL 6 printer driver** for Windows. Use this driver to take full advantage of your printer's features.
- **PostScript Printer Description (PPD) file** for Windows and Macintosh to allow installation of the PostScript driver.

If you are printing from a computer with a parallel cable

Go to page 2.10 for information on installing the printing software on a computer that is attached directly to the printer with a parallel cable.

If you are printing with a USB

Go to Appendix B, "Using Your Printer with a USB Cable", for information on installing the print software on a USB-enabled computer.

If you are printing from a Macintosh

Go to Appendix C, "Using Your Printer with Macintosh", for information on installing the PostScript for Macintosh.

If you are printing from DOS

Go to Appendix D, "Printing from DOS Applications", for information on installing the DOS print software and printing from DOS application.

If you are printing with PostScript driver

Go to Appendix E, "Using Windows PostScript Driver", for information on installing the PPD file.

If you are using Linux

Go to Appendix I, "Using Your Printer in Linux", for information on installing the Linux driver.

Before Installing the Printer Software

Verify the following:

- At least **16 MB or more of RAM** is installed on your PC.
- There is at least **30 MB of free disk space** on your PC.
- All applications are closed on your PC before beginning installation.
- Windows 95, Windows 98, Windows Me, Windows NT 4.0 or Windows 2000.

Installing the Printer Software from the CD-ROM

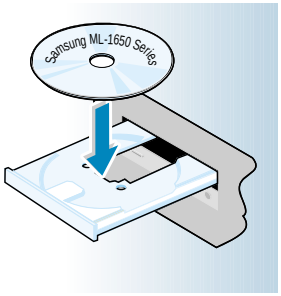

1 Place the CD-ROM in the CD-ROM drive. Installation will start automatically.

If the CD-ROM drive does not automatically run:

Select **Run** from the **Start** menu, and type **x:\cdsetup.exe** in the Open box (where **x** is the drive letter for the CD-ROM drive), then click **OK**.

Note: If the New Hardware Found box appears during the installation procedure, click the [x] in the upper right corner of the box, or click **Cancel**.

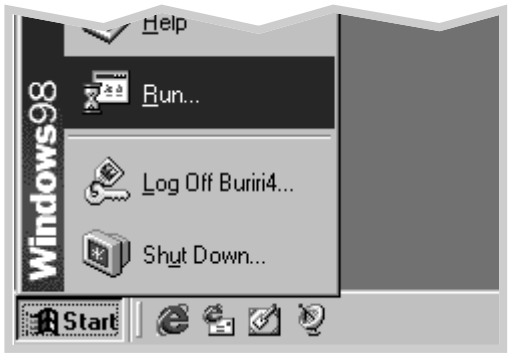

2 When the opening screen appears, select the appropriate language.

3 Click **Install the Samsung Software-I on your PC (PCL/USB)**.

4 The Welcome window opens. Click **Next**.

5 Follow the instructions on the screen to complete the installation.

Printer Driver Features

ML-1650 series printer drivers will support the following standard features:

- Input tray selection
- paper size, orientation and media type
- number of copies

Table below lists a general overview of features supported by the ML-1650 series printer drivers.

Features \ Driver	PCL				PostScript			
	Win2000	Win9x	NT4.0	Macintosh	Win2000	Win9x	NT4.0	Macintosh
Toner save	Y	Y	Y	N	Y	Y	Y	N
Print quality option	Y	Y	Y	Y	Y	Y	Y	Y
Graphic mode	Y	Y	Y	N	N	N	N	N
Halftoning	Y	Y	Y	N	N	Y	Y	N
Manual duplex	Y	Y	Y	N	N	N	N	N
Booklet printing	Y	Y	Y	N	N	N	N	N
Poster printing	Y	Y	Y	N	N	N	N	N
Multiple pages per sheet (N-up)	Y	Y	Y	Y	Y	Y	N	Y
Fit to page printing	Y	Y	Y	Y	Y	Y	Y	Y
Different source for first page	Y	Y	Y	N	N	N	N	Y
Watermark	Y	Y	Y	Y	N	N	N	N
Overlay	Y	Y	Y	N	N	N	N	N
TrueType fonts option	Y	Y	Y	N	Y	Y	Y	Y
Error reporting	Y	Y	Y	N	Y	Y	Y	Y

Software Installation Tips

I do not have a CD-ROM drive

If you have access to another computer with a CD-ROM drive, you can use the make diskette utility in Windows to create the disks you need for the installation. Go to Appendix G, "Installing Software from Diskettes".

How do I remove the printing software ?

In Windows, after installation, the Uninstall icon in the ML-1650 series program group allows you to select and remove any or all of the Windows ML-1650 printing system components.

Starting the Uninstaller:

1. In the **Samsung ML-1650 Series** Program group, select **Samsung ML-1650 Driver Uninstall.**
2. Click **Next**.
3. Select the ML-1650 printing system components you want to uninstall.
4. Click **OK**.
5. Follow the on-screen instructions.

How do I access printer features ?

Some printer features, such as paper size and page orientation, may be available through your application settings. Use application settings, if available, because they override printer driver settings.

Access advanced printer features through your printer driver. See Chapter 5, "Printing Tasks" for instructions on using your printer driver features.

If you have problems installing

- Exit your software programs. Then turn off the computer and the printer. Turn on the printer, then turn on the computer.
- Close any virus protection programs that are running on your computer.
- Uninstall the printer software following the instructions above, then repeat the installation procedure.

chapter 3

Using the Control Panel

This chapter describes how to use the printer's control panel. It provides information on the following topics:

- Control Panel Buttons
- Control Panel Lights

Control Panel Buttons

The printer has three buttons: **Cancel/Reprint**, **Demo** and **Toner Save**.

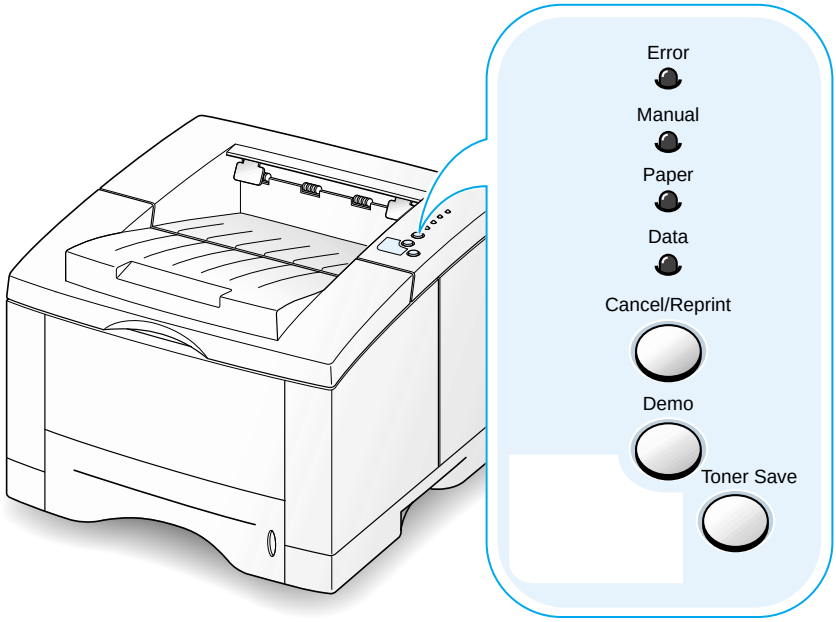

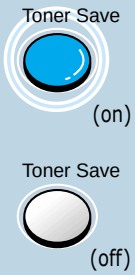

Toner Save

Press **Toner Save** to turn the toner save mode on or off. The printer must be in the ready mode.

- If the button backlight is on, toner save mode activates and the printer uses less toner to print a document.
- If the button backlight is off, toner save mode is disabled and you will print in normal quality. For further information on Toner Save mode, see page 5.6.

Cancel/Reprint

Cancel job

Press **Cancel/Reprint** and hold until the control panel lights blink to cancel a job the printer is currently printing. The **Error** light will blink while the print job is cleared from both the printer and the computer, and the printer will then return to the ready mode. This may take some time, depending on the size of the print job.

Note: If the Cancel/Reprint button is accidentally pushed, the job must be reprinted. There is no undo function.

Reprint last page of the job

If you press **Cancel/Reprint** in the ready mode, the printer prints the last page of the last print job.

Note: If you want to prevent somebody from reprinting your document, you can turn the Reprinting feature off in the printer's properties dialog box. When you turn the feature off in the printer's properties, the Cancel/Reprint button on the control panel does not perform the reprinting operation.

To disable this feature:

1. From the **Start** menu, select **Settings** and then **Printers**.

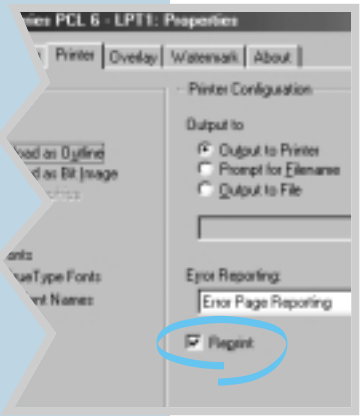

2. Click the right mouse button on the **Samsung ML-1650 Series PCL 6** printer icon and select **Properties** to open the properties window.
3. From the **Printer** tab, click **Reprint** to empty the checkbox.

   With the box empty, you cannot reprint the last page from the control panel.

   When you want to reprint the last page on the control panel, you must put a check mark on this check box.
4. Click **OK**.

Demo

Print demo page and configuration sheet

Press and hold **Demo** for about 2 seconds until the control panel lights blink slowly to print a demo page. The printer must be in the ready mode.

Press and hold **Demo** for about 6 seconds until the control panel lights blink rapidly to print a configuration sheet. The printer must be in the ready mode. For further information, see page 7.6.

Start manual feeding

When you select **Manual Feed** for **Paper Source** from your software application, you should press **Demo** each time you feed a sheet of paper manually. For further information, see page 4.10.

Cleaning the inside of the printer

Press and hold **Demo** for about 10 seconds until the control panel lights remain illuminated to automatically clean the inside of the printer. After cleaning the printer, one cleaning sheet prints. For further information, see page 7.6.

Ignoring Mismatched Paper

When the size of paper you're using is different from the one you have set in the printer's properties, press the **Demo** button to ignore the message and feed paper from the corresponding input tray.

Control Panel Lights

The control panel lights indicate the status of your printer. If the **Error** light is on, the printer is experiencing an error. See "Troubleshooting Error Messages" on page 7.22.

Control Panel Light Message

Light status legend

symbol for "light off"

symbol for "light on"

symbol for "light blinking"

Error
Manual
Paper
Data

Ready Mode

The **Data** light is on and the printer is ready to print.

No action is needed. If you press and hold the **Demo** button for about 2 seconds, a demo page will print. If you press and hold the button for about 6 seconds, a configuration sheet will print.

Manual
Paper
Data

Processing

The printer is receiving or processing data. Wait for the job to print.

Pressing the **Cancel/Reprint** button cancels the current job. One or two pages may print as the printer clears the print job. The printer will return to the ready mode after the job has been canceled.

Data

The **Data** light blinks rapidly. Data is in the printer memory waiting to be printed.

Pressing the **Cancel/Reprint** button cancels the current job and the printer returns to the ready mode.

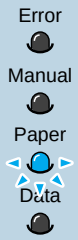

Paper out

The printer is out of paper. The **Paper** light blinks until paper is added.

Load paper into the printer. There is no need to press any button to reset.

Manual feed mode

The printer is set to **Manual Feed** mode. You have to feed paper manually through the Multi-Purpose Tray. If you do not want to be in the Manual Feed mode, change the setting from your printer properties. For details on the Manual Feed mode, see page 4.10.

Paper out in the manual feed mode

In the Manual Feed mode, the printer picks up paper from the Multi-Purpose Tray, one sheet at a time.

Feed the correct paper in the Multi-Purpose Tray, and press the **Demo** button to start printing.

Printing in the manual feed mode

The printer is processing data in the Manual Feed mode. Wait for the job to print.

Paper Mismatch

The size of the paper in the input tray is mismatched to the Paper Size setting in printer's properties. Remove the paper from the tray and load the paper of the same size as you have set in the properties.

chapter 4

Print Media

This chapter will help you understand what kind of paper you can use with the ML-1650 series printer and how to properly load paper in the different paper trays for the best print quality.

Topics included in this chapter are:

- Choosing Paper and Other Media
- Selecting Output Tray
- Loading Paper
- Printing on Envelopes
- Printing on Labels
- Printing on Transparencies
- Printing on Preprinted Paper
- Printing on Card Stock or Custom-sized Media

Choosing Paper and Other Media

You can print on a variety of print media, such as plain paper, envelopes, labels, transparencies, card stocks and so on. See "Paper Specifications" on page A.2. To get the best possible print quality, use only high-quality copier-grade paper.

When you choose print media, consider the following:

- **Desired outcome**: The paper you choose should be appropriate for the project.
- **Size**: You can use any size paper that fits easily within the paper adjusters of the paper tray.
- **Weight** : Your printer supports paper weight as follows:
  - 16~28 lbs bond for Tray 1 or optional Tray 2
  - 16~43 lbs bond for Multi-Purpose Tray
- **Brightness**: Some papers are whiter than others and produce sharper, more vibrant images.
- **Surface smoothness**: The smoothness of the paper affects how crisp the printing looks on the paper.
- **Opacity**: Opacity refers to the degree to which printing on one side of the paper shows through the other side. Use paper high in opacity (or thicker paper) for two-sided (duplex) printing.

Always test a sample of paper before purchasing large quantities.

CAUTION: Using media that does not confirm to the specification listed in the paper specification can cause problems that may require service. This service is not covered by the warranty or service agreements.

Media Sizes and Capacities

Media Size	Input Source/Capacity*1		
	Tray 1 or Optional Tray 2	Multi-Purpose Tray	Manual Feed
Plain Paper			
Letter (8.5 x 11 in.)	550	100	1
Legal (8.5 x 14 in.)	550	100	1
Executive (7.25 x 10.5 in.)	550	100	1
Folio (8.5 x 13 in.)	550	100	1
A4 (210 x 297 mm)	550	100	1
B5 (182 x 257 mm)	550	100	1
A5 (148 x 210 mm)	–	100	1
Envelopes			
No. 10 (4.12 x 9.5 in.)	–	10	1
Monarch (3.87 x 7.5 in.)	–	10	1
C5 (162 x 229 mm)	–	10	1
DL (110 x 220 mm)	–	10	1
B5 (176 x 250 mm)	–	10	1
Labels*2			
Letter (8.5 x 11 in.)	–	25	1
A4 (210 x 297 mm)	–	25	1
Transparency films*2			
Letter (8.5 x 11 in.)	–	20	1
A4 (210 x 297 mm)	–	20	1
Card stocks*2	–	10	1
Bond*2			1

*1 Depending on paper thickness, maximum capacity may be reduced.
*2 If you are experiencing excessive jamming, feed one sheet at a time through the Multi-Purpose Tray.

Paper Guidelines

When selecting or loading paper, envelopes, or other special media, keep these guidelines in mind:

- Attempting to print on damp, curled, wrinkled, or torn paper can **cause paper jams** and poor print quality.
- **Use** cut-sheet paper **only**. You cannot use multi-part paper.
- **Use only** high-quality, copier grade paper.
- **Do not** use paper that has been already printed on or that has been fed through a photocopier.
- **Do not** use paper with irregularities, such as tabs or staples.
- **Do not** attempt to load any tray during printing and never overfill the tray. This could cause a paper jam.
- **Avoid** paper with embossed lettering, perforations, or texture that is too smooth or too rough.
- Colored paper should be of the same high quality as white photocopy paper. The pigments must withstand the printer's fusing temperature of 400°F (205°C) for 0.1 second without deterioration. **Do not** use paper with a colored coating that was added after the paper was produced.
- Preprinted forms must be printed with nonflammable, heat-resistant ink that will not melt, vaporize, or release hazardous emissions when subjected to the printer's approximately 400°F (205°C) fusing temperature for 0.1 second.
- Store paper in its ream wrapper until it is ready to use. Place cartons on pallets or shelves, not on the floor.
- **Do not** place heavy objects on top of the paper, whether it is packaged or unpackaged.
- **Keep** paper away from moisture, direct sunlight or other conditions that can cause it to wrinkle or curl.

Selecting the Output Tray

The printer has two output locations: the **rear output tray** and the **top output tray**. To use the top output tray, be sure the rear output tray is closed. To use the rear output tray, open it.

- If paper coming out of the top output tray has problems, such as excessive curl, **try printing to the rear output tray.**
- To avoid paper jams, **do not open or close the rear output tray** while the printer is printing.

Printing to the Top Output Tray (Face down)

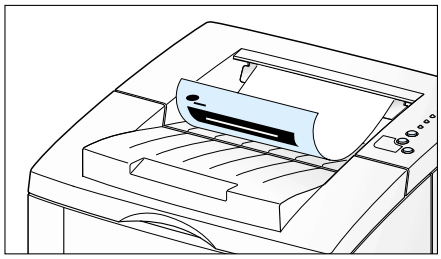

▲ Top output tray

The top output tray collects paper **face-down**, **in correct order**. The top output tray should be used for most print jobs and is recommended for printing the following:

- over 250 sheets of paper, continuously

Printing to the Rear Output Tray (Face up)

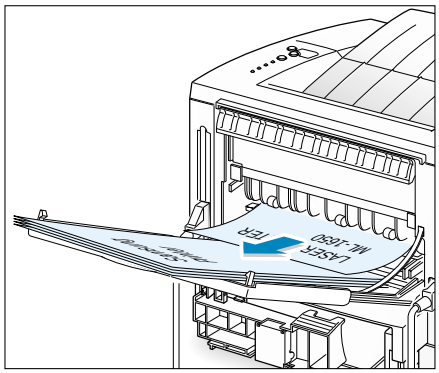

▲ Rear output tray

The printer always prints to the rear output tray if it is open. Paper comes out of the printer **face-up**, **with the last page on top**.

Printing from the Multi-Purpose Tray to the rear output tray provides the **straight paper path**. Opening the rear output tray might improve output quality with the following:

- over 100 sheets of paper, continuously
- envelopes
- labels
- small custom-size paper
- postcards
- paper lighter than 16 lb (60 g/m^2) or heavier than 28 lb (105 g/m^2)
- transparencies:

Note: Some special transparencies may have stacking problem by curl. In that case, please use the face down tray.

To open the rear output tray:

1 Open the rear door by pulling it down. The cover functions as the output tray.

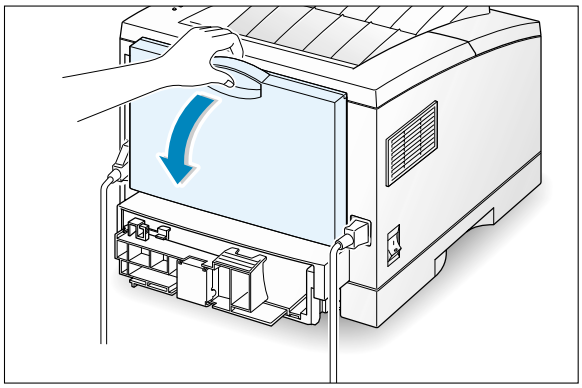

2 Pull the extender to extend the output tray to its full-length position. This will allow the tray to hold longer paper.

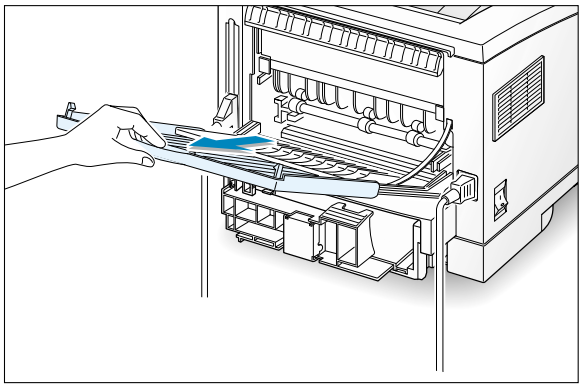

3 If you do not want to stack the printed pages on the rear output tray, slide the extender back into place and close the tray. The pages will then stack on the top output tray.

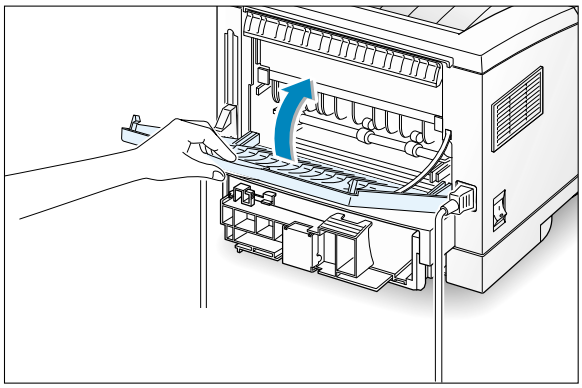

Note: The capacity of the rear output tray is the same as that of the Multi-Purpose Tray. If the tray is overloaded with printed pages, it may fall from the printer. Remove the pages so that the tray is not overloaded.

Loading Paper

Proper paper loading helps to prevent paper jams and ensure trouble-free printing. **Do not** remove paper tray(s) while a job is printing. Doing so may cause a paper jam.

The paper level indicator on the front of the paper tray(s) shows the amount of paper currently left in the tray. When the tray is empty, the indicator turns red.

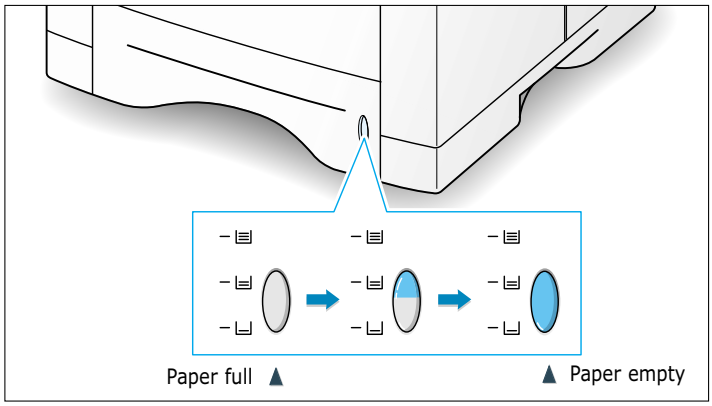

Using Tray 1 or the Optional Tray 2

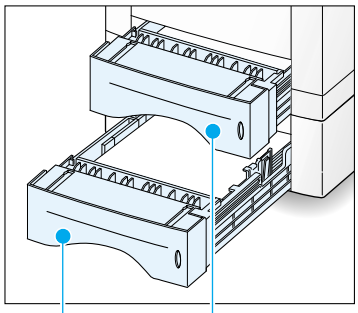

Tray 1 holds 550 sheets of paper. See "Media Sizes and Capacities" on page 4.2 for acceptable paper size and capacities of each trays.

Load a stack of paper into the Tray 1 or optional Tray 2 and print. For details on loading paper in the Tray 1 or optional Tray 2, see "Load Paper" on page 2.4.

Using the Multi-Purpose Tray

The Multi-Purpose Tray is located in the front of your printer. It can be closed when you are not using it, making the printer more compact. The Multi-Purpose Tray can hold several sizes and types of paper, such as transparencies, cards, and envelopes. You may also want to use the Multi-Purpose Tray for single page print jobs on letterheads, colored paper for use as separator sheets, or other special paper that you do not normally keep in the paper tray.

You can load approximately 100 sheets of paper, 10 envelopes, 20 transparencies, 10 card stocks or 25 labels at a time.

When you print from the Multi-Purpose Tray, you must select **Multi-Purpose Tray** for **Paper Source** from your software application, and then select the paper size and type from the software application for the paper you have loaded. See page 5.3.

- Load only one size of print media at a time in the Multi-Purpose Tray.
- To prevent paper jams, do not add paper when there is still paper in the Multi-Purpose Tray. This also applies to other types of print materials.
- Print media should be loaded face up with the top of the print media going into the Multi-Purpose Tray first and be placed against the left edge of the tray.
- Do not place objects on the Multi-Purpose Tray. Also avoid pressing down or applying excessive force on it.

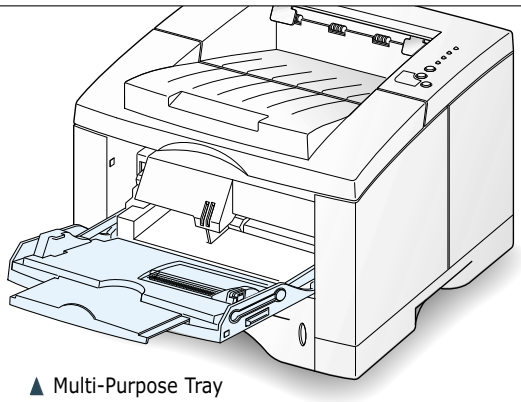

▲ Multi-Purpose Tray

To load paper in the Multi-Purpose Tray:

1 Pull the Multi-Purpose Tray down towards you.

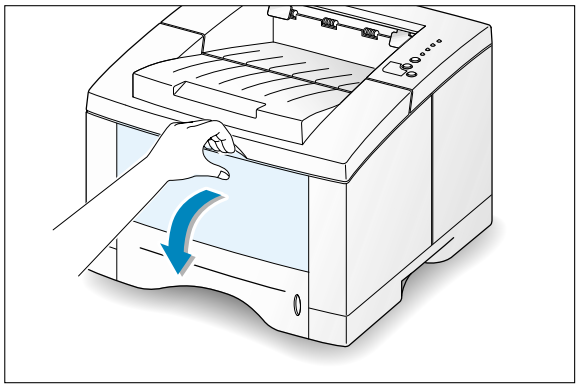

2 Slide the extender to extend the tray to its full-length position to hold longer paper.

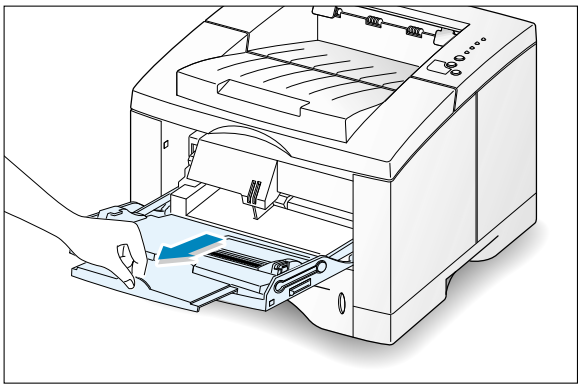

3 Prepare a stack of paper for loading by flexing or fanning them back and forth. Straighten the edges on a level surface.

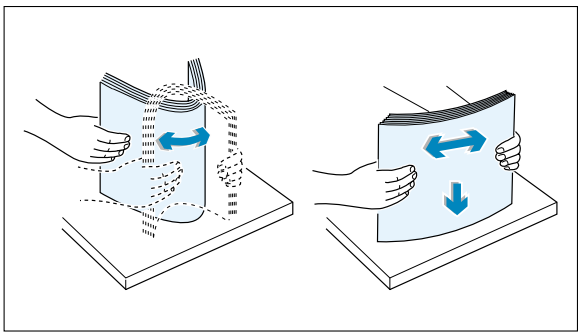

4 Place paper **with the print side face up**, and against the left edge of the tray.

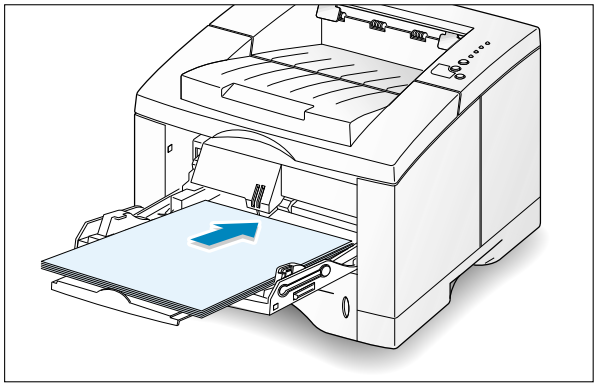

Note: Make sure that you have not loaded too much print media. The stack should be under the stack height limit mark. The print media buckles if you load a stack that is too deep, or push it in too far.

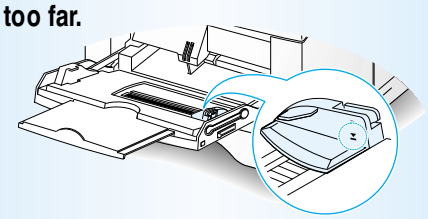

Stack height limit mark

5 Slide the paper width guide to the left flush against the stack of print material without bending.

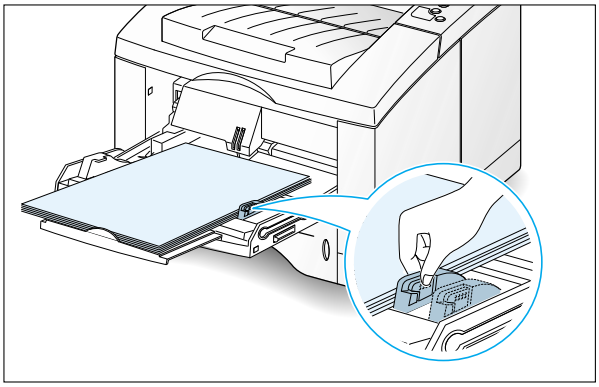

6 After printing, push the extender back to its place and close the Multi-Purpose Tray.

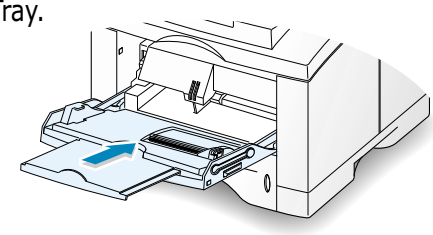

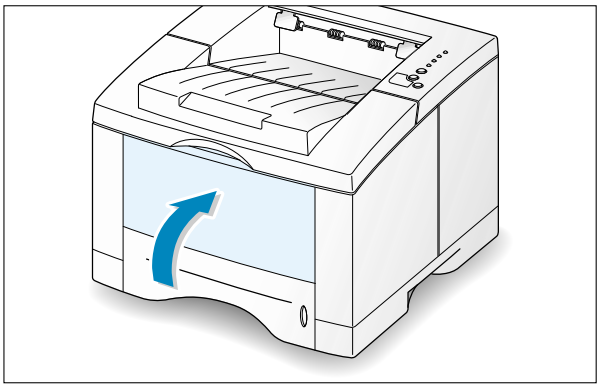

Using the Manual Feed

When you change the print settigs, if you select **Manual Feed** in the **Paper Source** option, you can manually load paper in the Multi-Purpose Tray. Manually loading paper can be helpful when you want to check the print quality after each page is printed.

This loading procedure is almost the same as the procedure for loading in the Multi-Purpose Tray except you load paper sheet-by-sheet in the Multi-Purpose Tray, send print data to print the first page, and press the **Demo** button to print each following page.

1 Load the paper in the Multi-Purpose Tray **with the print side up**.

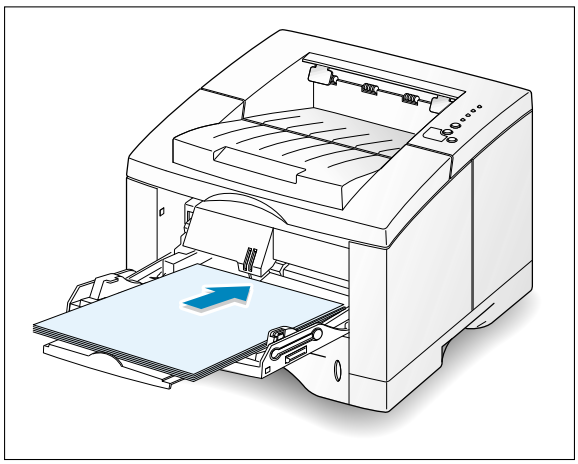

2 Slide the paper width guide to the left flush against the stack of print media without bending.

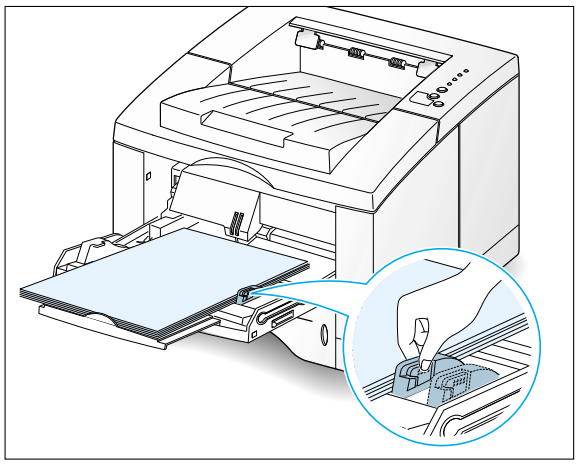

3 When you print a document, you must select **Manual Feed** for **Paper Source** from the software application, and then select the correct paper size and type. For details, see page 5.3.

4 Print the document.

5 The **Manual** light on the control panel blinks. Press the **Demo** button on the control panel.

The sheet of paper is loaded and printed.

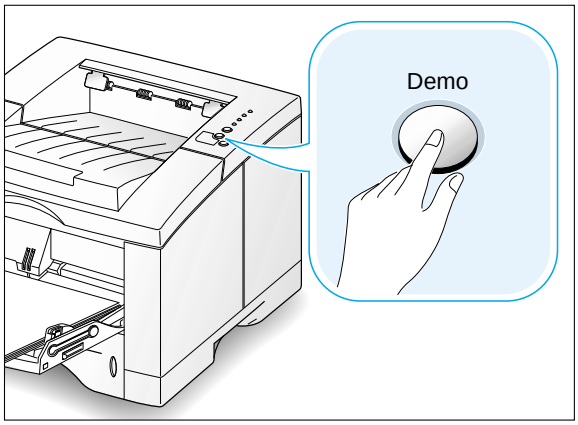

6 After one page is printed, the **Manual** light on the control panel blinks again.

Feed the next sheet into the Multi-Purpose Tray and press **Demo**.

Repeat this step for every page to be printed.

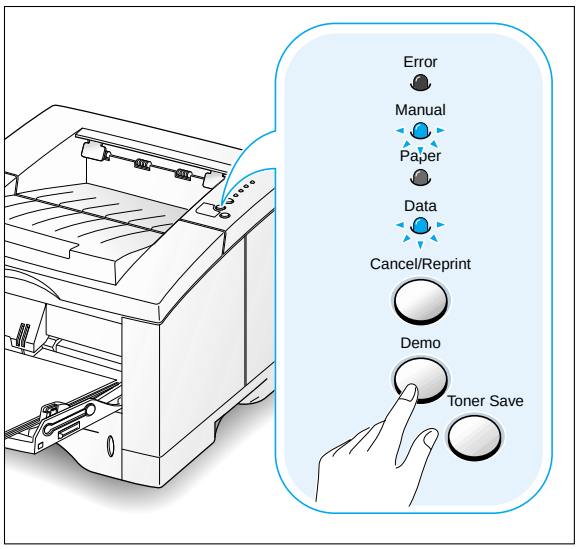

Printing on Envelopes

Guidelines

- Only use envelopes recommended for laser printers. Before you load envelopes in the Multi-Purpose Tray, make sure that they are undamaged and are not stuck together.
- Do not load more than 10 envelopes into the Multi-Purpose Tray.
- Do not feed stamped envelopes.
- Never use envelopes with clasps, snaps, windows, coated lining, or self-stick adhesives. These envelopes may severely damage the printer.

1 Open the Multi-Purpose Tray and slide the extender to its full-length position.

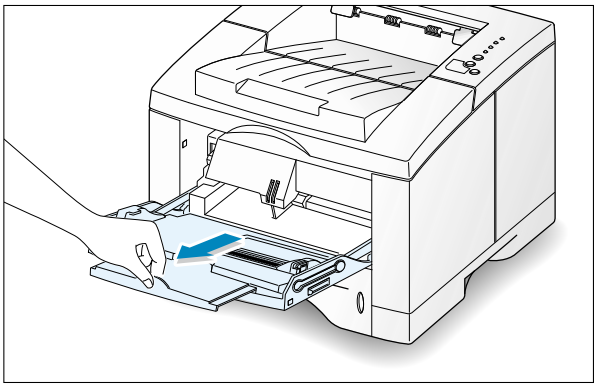

2 Open the rear output tray and pull the extender.

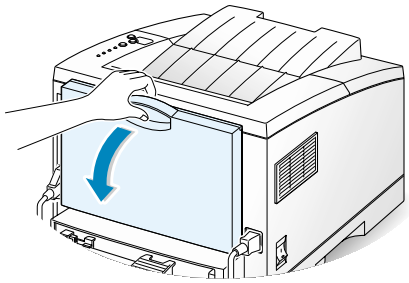

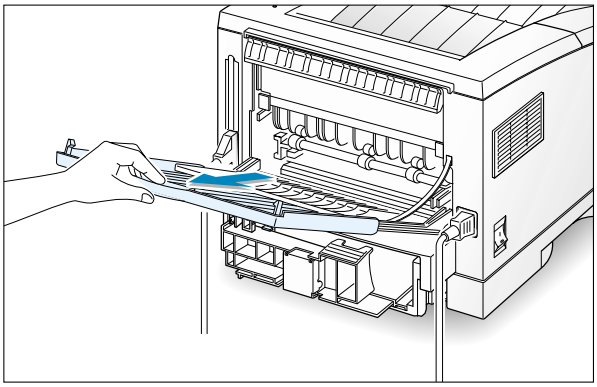

3 Flex or fan the envelopes to supply air through them for loading.

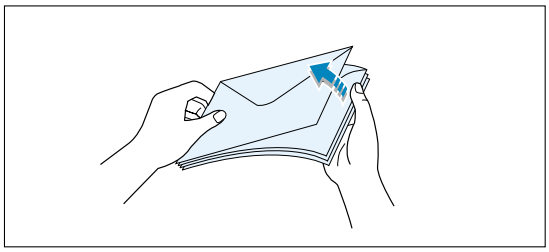

4 Load the envelopes **with the flap side down**, and against the left edge of the tray.

The stamp area is **on the left side** and the end of the envelope **with the stamp area enters the Multi-Purpose Tray first**.

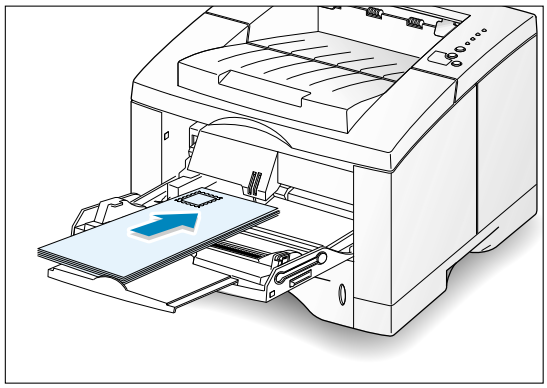

5 Adjust the guide to the left edge of the envelope stack.

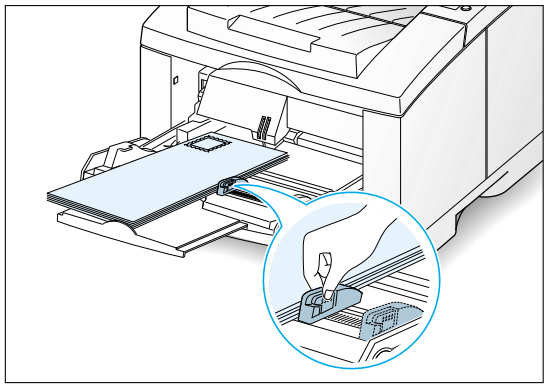

6 When you print on envelopes, configure the paper source, type and size properly in the software application. For details, see page 5.3.

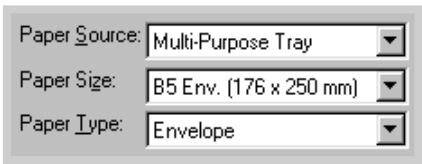

7 After printing, close the Multi-Purpose Tray and the rear output tray.

Printing on Labels

Guidelines

- Only use labels recommended for laser printers.
- Do not load more than 25 labels into the Multi-Purpose Tray at a time.
- Verify that the labels' adhesive material can tolerate fusing temperature of 200°C (392°F) for 0.1 second.
- Make sure that there is no exposed adhesive material between the labels. Exposed areas can cause labels to peel off during printing, which can cause paper jams. Exposed adhesive can also cause damage to printer components.
- Do not feed a sheet of labels through the printer more than once. The adhesive backing is designed for one pass through the printer.
- Do not use labels that are wrinkled, bubbled, separated from the backing sheet, or damaged in any way.

1 Open the Multi-Purpose Tray and the rear output tray.

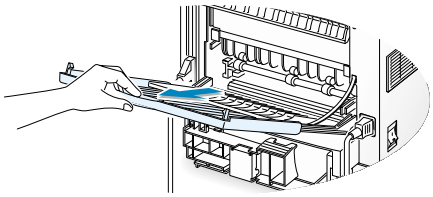

2 Load labels **with print side up**, and against the left edge of the tray. Adjust the guide to fit the width of the labels.

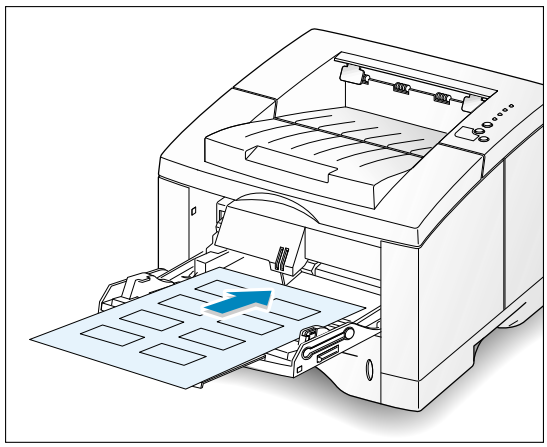

3 When you print on labels, configure the paper source, type and size in the software application. For details, see page 5.3.

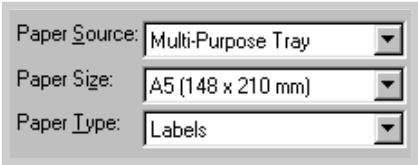

Note: To prevent them from sticking together, remove label sheet from the output tray as they are printed out.

Printing on Transparencies

Guidelines

- Only use transparencies recommended for use in laser printers.
- Do not load more than 20 transparencies into the Multi-Purpose Tray at a time.
- Make sure that the transparencies are not wrinkled or curled, and that they do not have any torn edge.
- Hold the transparencies by the edges and avoid touching the print side. Oils from your fingers that are deposited on the transparency can cause print quality problems.
- Be careful not to scratch or leave fingerprints on the print side.

4

1 Open the Multi-Purpose Tray and pull the extender out ot its full-length position.

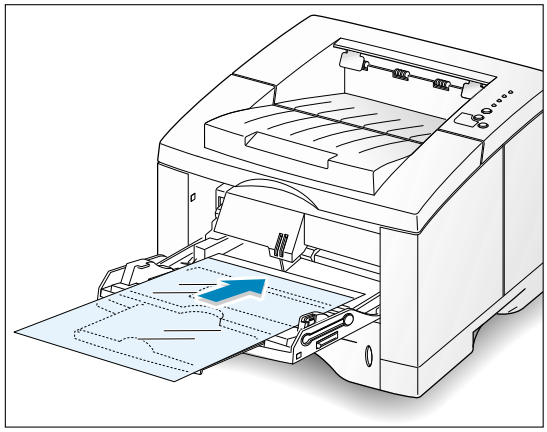

2 Load transparencies **with print side up**, and **the top with the adhesive strip entering the printer first**. Adjust the guide to fit the width of the transparencies.

3 When you print on transparencies, configure the paper source, type and size in the software application. For details, see page 5.3.

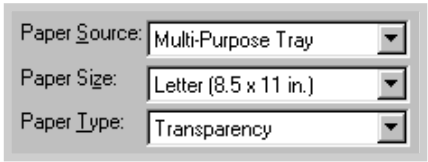

Notes:

- **To prevent transparencies from sticking together, remove them from the output tray as they are printed.**
- **Place transparencies on a flat surface after removing them from the printer.**

Printing on Preprinted Paper

Preprinted paper is paper that has some type of printing placed on it before it is sent through the printer (paper that has a preprinted logo at the top of the page, for exsample).

Guidelines

- Letterheads must be printed with heat-resistant ink that will not melt, vaporize, or release hazardous emissions when subjected to the printer's fusing temperature of 400°F (205°C) for 0.1 second.
- Ink on letterheads must be non-flammable and should not adversely affect any printer rollers.
- Forms and letterheads should be sealed in a moisture-proof wrapping to prevent changes during storage.
- Before you load preprinted paper as forms and letterheads, verify that the ink on the paper is dry. During the fusing process, wet ink can come off preprinted paper.

1 Load letterheads into the tray you want to use as shown in the figures. Adjust the guide to fit the width of the paper stack.

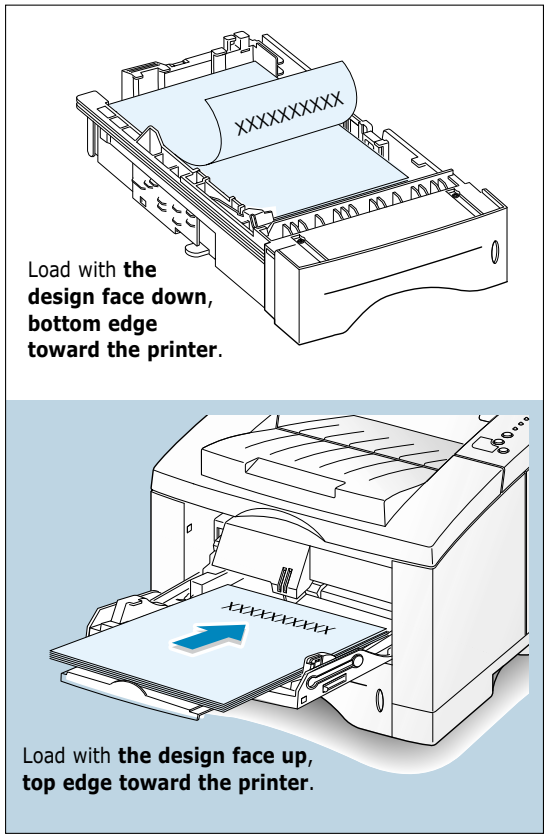

Load with **the design face down, bottom edge toward the printer**.

Load with **the design face up, top edge toward the printer**.

2 When you print a document on the paper, configure the paper source, type and size in the software application. For details, see page 5.3.

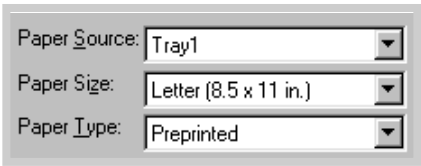

Printing on Card Stock or Custom-sized Media

Postcards, 3.5 by 5.83 in.(index) cards and other custom-sized media can be printed with the ML-1650 series printer. The minimum size is 90 by 148 mm (3.5 by 5.83 in.) and the maximum size is 216 by 356 mm (8.5 by 14 in.).

Guidelines

- Always insert the short-edge into the Multi-Purpose Tray first. If you want to print in landscape mode, make this selection through your software. Inserting paper long-edge first may cause a paper jam.
- Do not load more than 10 cards into the Multi-Purpose Tray at a time.
- Do not print on media smaller than 90 mm (3.5 in.) wide or 148 mm(5.83 in.) long.
- Set margins at least 6.4 mm (0.25 in.) away from the edges of the media in the software application.

4

1 Open the Multi-Purpose Tray and the rear output tray and pull the extenders out to its full-length position.

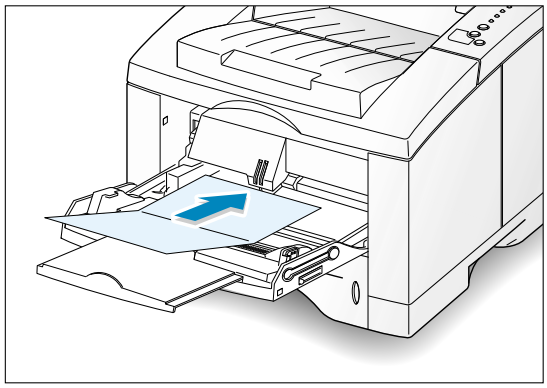

2 Load print media **with print side up**, **short edge first** and against the left edge of the tray.

Adjust the guide to fit the width of the media.

3 Configure the paper source, type and size in the printer driver's properties (see page 5.3) and print.

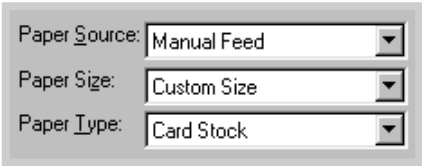

Note: If the size of your print media is not listed in the Paper Size box in the Paper tab of the printer driver properties, select Custom Size and set the paper size manually.

chapter 5

Printing Tasks

This chapter explains your printing options and covers common printing tasks.

Topics included in this chapter are:

- Printing a Document
- Using Toner Save Mode
- Printing on Both Sides of the Paper (Manual Duplexing)
- Printing Multiple Pages on One Sheet of Paper (N-Up Printing)
- Printing Booklets
- Printing on Different Paper for the First Page
- Fitting Your Document To a Selected Paper Size
- Printing Posters
- Setting Graphic Properties
- Printing Watermarks
- Using Page Overlay

Printing a Document

The following procedure describes the general steps required for printing from various Windows applications. The exact steps for printing a document may vary depending on the application program you are using. Refer to your software application's documentation for the exact printing procedure.

1 Open the document you want to print.

2 Select **Print** from the **File** menu. The Print dialog box for your application will be displayed (the Print dialog box for your application may look slightly different).

The basic print settings you will need are usually selected within this Print dialog box. These settings include the number of copies, paper size, and page orientation.

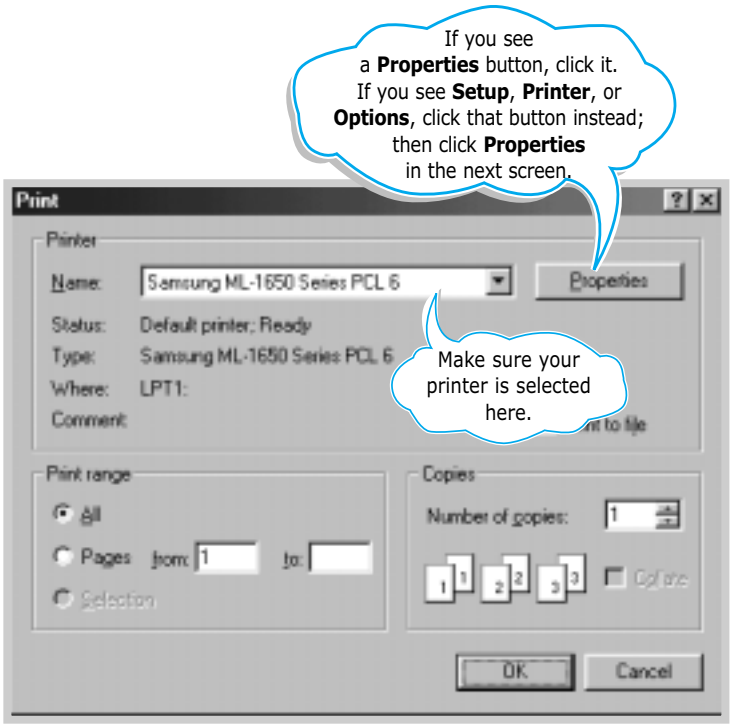

3 To take full advantage of the printer features provided by your ML-1650 series printer, click **Properties** in the application's Print dialog box and go to step 4.

If you see **Setup**, **Printer**, or **Options**, click that button instead. Then click **Properties** in the next screen.

4 Now you see the Samsung ML-1650 Series printer's Properties dialog box. The Properties dialog box allows you to access all the information you will need when using your printer.

If necessary, click the **Paper** tab to display the settings shown below. The **Paper** tab contains the options for setting the basic paper handling.

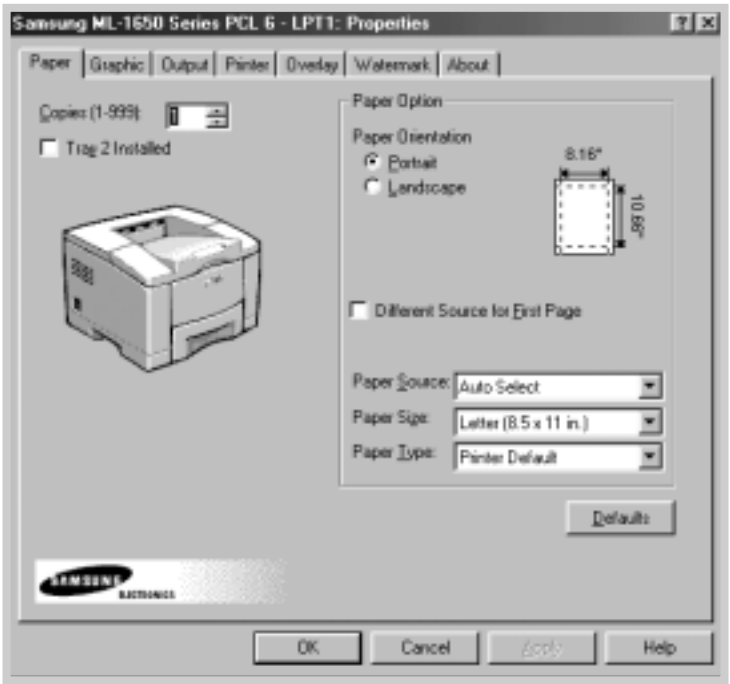

Make sure the **Paper Source** is set to **Tray 1**. If you use paper in the Multi-Purpose Tray or optional Tray 2, select the corresponding paper source.
Manual Feed source is used when printing to special media. You have to feed one sheet at a time into the printer. See page 4.10.
If the paper source is set to **Auto Select**, the printer automatically selects the print media according to the following order: Multi-Purpose Tray, Tray 1, Tray 2 (option).

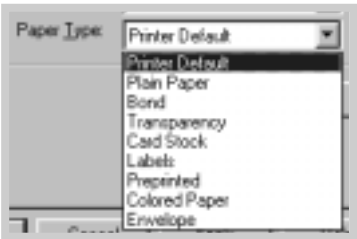

Make sure the **Paper Type** is set to **Plain Paper**. If you load a different type of print media, select the corresponding paper type. For further information on print media, refer to chapter 4 'Print Media'.
Also, select the paper size you have loaded in your printer.

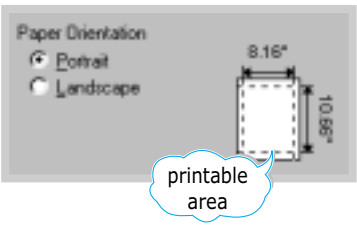

The **Paper Orientation** option allows you to select the direction in which information is printed on a page. **Portrait** prints across the width of the page, letter style. **Landscape** prints across the length of the page, spreadsheet style.

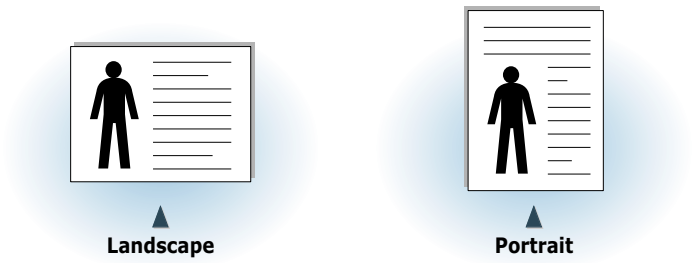

You can also see the printable area.