5 Click other tabs on the top of the Properties dialog box to access other features, if needed.

6 When you complete the print settings, click **OK** until the Print dialog box is displayed.

7 Click **OK** to start printing.

Notes:

- **Most Windows applications will override settings you specify in the printer driver. Change all print settings available in the software application first, and change any remaining settings using the printer driver.**
- **The settings you change remain in effect only while you are using the current program. To make your changes permanent, make them in the Printers folder. Follows this procedure:**

1. **Click the Windows Start button.**
2. **Select Settings, then Printers to open the Printers window.**

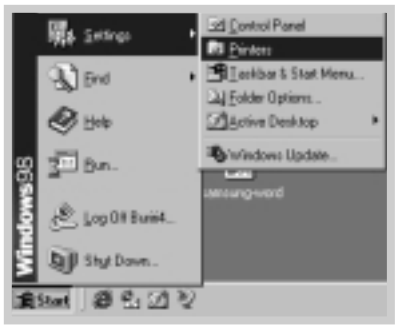

3. **Select the Samsung ML-1650 Series PCL 6.**
4. **Click the right mouse button and select Properties to open the properties window.**

Canceling a Print Job

There are two ways to stop a print job.

To stop a print job from the ML-1650 series printer

Press the **Cancel/Reprint** button on the control panel.

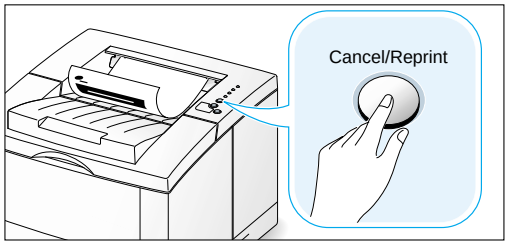

The printer will finish printing the page that is moving through the printer and delete the rest of the print job. Pressing **Cancel/Reprint** cancels only the current job in the printer. If more than one print job is in printer memory, **Cancel/Reprint** must be pressed once for each job.

To stop a print job from the Printers folder

1. From the **Start** menu, select **Settings**.
2. Select **Printers** to open the Printers window, then double-click the **Samsung ML-1650 Series PCL 6**.
3. From the **Document** menu, select **Cancel Printing** (Windows 9x) or **Cancel** (Windows NT 4.0).

Printing Help

The Samsung ML-1650 series printer has a help screen that can be activated by the **Help** button in the printer Properties dialog box. These help screens give detailed information about the printer features provided by the ML-1650 series printer driver.

From the upper right hand corner, click ? then click on a setting for more information.

If you want to restore the default printer properties settings when you change the print settings, click **Defaults** in the Properties dialog box.

Using Toner Save Mode

Toner Save mode allows the printer to use less toner on each page. Selecting this option will extend the life of your toner cartridge and reduce your cost per page, but will reduce print quality. This setting is not available with 1200 dpi settings.

There are two ways to enable the Toner Save mode.

To enable this feature from the ML-1650 series printer

Press the **Toner Save** button on the control panel. The printer must be in the ready mode (**Data** light is on).

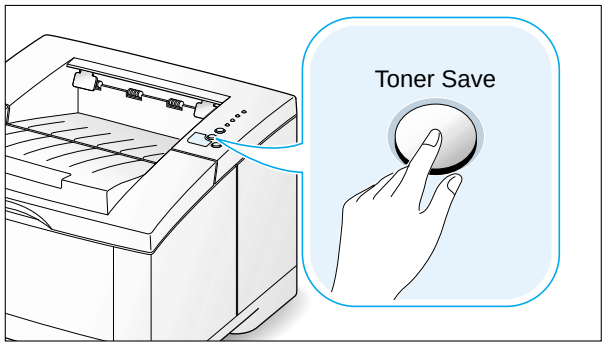

- If the button backlight is on, toner save mode activates and the printer uses less toner to print a page.
- If the button backlight is off, toner save mode is disabled and the printer prints in the normal mode.

To enable this feature from the software application

1. When you change the print settings from your software application, access the printer properties. See page 5.2 to access the printer properties.

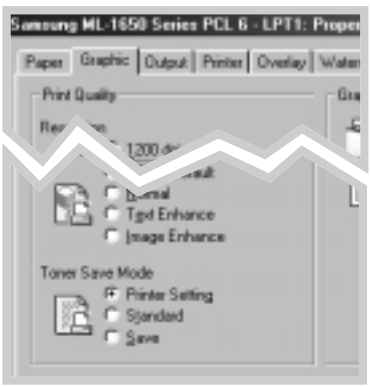

2. Click the **Graphic** tab, and select the **Toner Save Mode** option. You can select from:
   - **Printer Setting**: If you select this option, this feature is determined by the setting you've made on the control panel of the printer.
   - **Standard**: If you don't need to save toner to print a document, select this option.
   - **Save**: Select this option to allow the printer to use less toner on each page.
3. Click **OK**.

Printing on Both Sides of the Paper (Manual Duplexing)

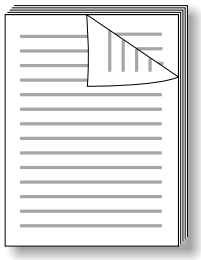

To print on both sides of the paper (manual duplexing), you must run the paper through the printer twice. You can print using the top output tray (face down tray) or the rear output tray (face up tray). Samsung recommends using the top output tray for light-weight paper. Use the rear output tray for any heavy media or media that tends to curl when printed, such as envelopes and card stock.

Note: To print on both sides of the paper, you must use the Multi-Purpose Tray for the paper input source. Load paper in the Multi-Purpose Tray.

5

1 When you change the print settings from your software application, access the printer properties. See page 5.2 to access the printer properties.

From the **Paper** tab, select the paper orientation, source, size and type.

2 Click the **Output** tab, then choose **Long Edge** or **Short Edge** from the **Type** drop-down list in the **Manual 2 Sided Printing** section.

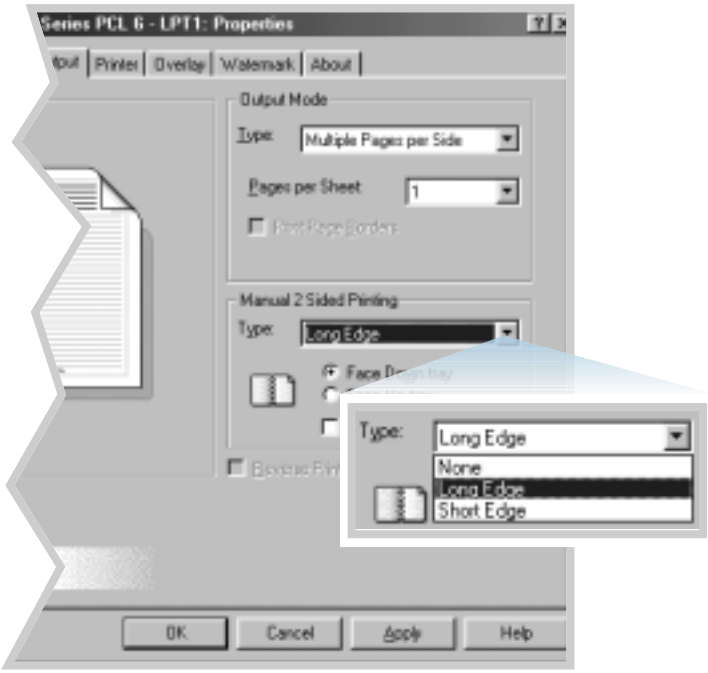

Note: If you can not see Long Edge in the Type drop-down list, set the Type box in the Output Mode section to Multiple Pages per Side or Fit to Page.

Choosing **Long Edge** lets you place the binding orientation along the long edge of the paper as in a magazine.

Choosing **Short Edge** lets you place the binding orientation along the short edge of the paper, as in a calendar.

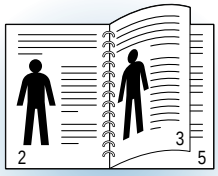

Long Edge in the **Portrait** orientation

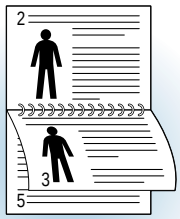

Long Edge in the **Landscape** orientation

Short Edge in the **Portrait** orientation

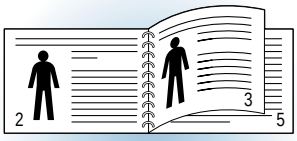

Short Edge in the **Landscape** orientation

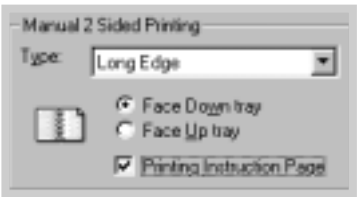

3 Select **Face Down Tray** (top output tray) or **Face Up Tray** (rear output tray) in which the printed media is to be stacked. According to this option, the printer will determine the print page order when the second sides are printed.

4 If you want to print the instruction page which tells you how to load the paper, click **Printing Instruction Page**. If the box is checked, the printer prints the instruction page before the duplexing job is printed. If the box is empty, this feature is disabled.

5 Start printing. The printer automatically prints only the odd-numbered pages.

6 After the first side has been printed, remove the remaining paper from the Multi-Purpose Tray and set it aside until after you finish your manual duplexing job.

7 Gather up the printed pages, flip the stack, and then straighten the stack before placing it back in the Multi-Purpose Tray.

Note: If you have selected the Face Up Tray option in Step 3, the last page is placed on the top of the stack. Do not rearrange the pages before reloading them to print the second side. Your printer knows the stacked page order and will print the corresponding second side for each page.

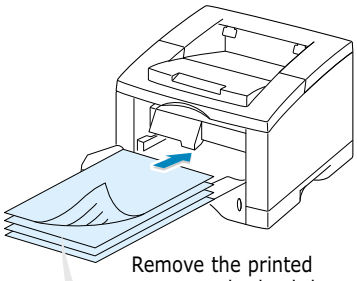

Remove the printed pages, and reload them into the Multi-Purpose Tray with the **printed side face down**.

The following illustrations show you how to put the printed pages back into the printer.

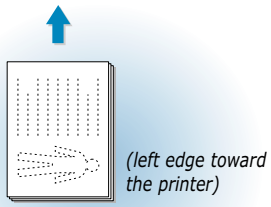

(left edge toward the printer)

Long Edge in the **Landscape** orientation

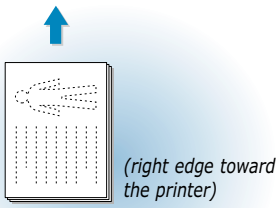

(right edge toward the printer)

Short Edge in the **Landscape** orientation

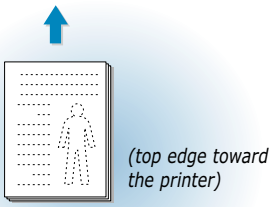

(top edge toward the printer)

Long Edge in the **Portrait** orientation

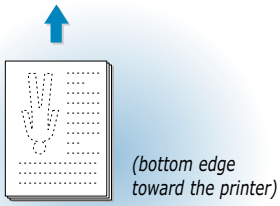

(bottom edge toward the printer)

Short Edge in the **Portrait** orientation

Note: Manual duplexing can cause the printer to become dirty more quickly and can therefore reduce print quality. See "Cleaning the Printer" on page 6.4 if the printer becomes dirty.

8 You are prompted to reinsert the paper into the Multi-Purpose Tray. Click **OK** on the screen to start printing the second side. The printer automatically prints only the even-numbered pages.

Printing Multiple Pages on One Sheet of Paper (N-Up Printing)

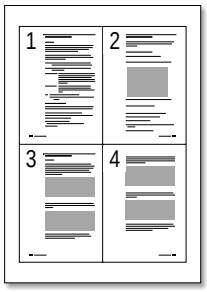

▲ 4 pages per sheet

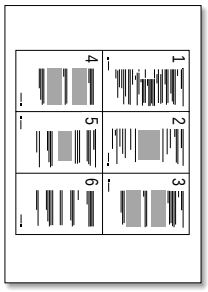

▲ 6 pages per sheet

You can select the number of pages that you want to print on a single sheet of paper. If you choose to print more than one page per sheet, the pages will appear decreased in size and arranged on the sheet. You can specify up to 16 pages.

1 When you change the print settings from your software application, access the printer properties. See page 5.2 to access the printer properties.

From the **Paper** tab, select the paper orientation, source, size and type.

2 Click the **Output** tab, and choose **Multiple Pages per Side** in the **Type** drop-down list. Then select the number of pages you want to print per sheet (1, 2, 4, 6, 9 or 16) in the **Pages per Sheet** drop-down list.

3 Click **Print Page Borders** if you want to print a border around each page on the sheet. **Print Page Borders** is enabled only if **Pages per Sheet** is 2, 4, 6, 9, or 16.

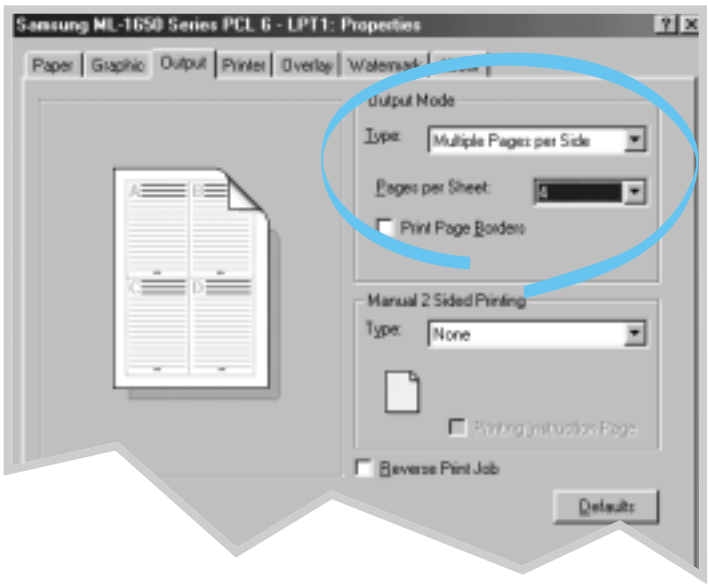

4 Click **OK**, then start printing.

Printing Booklets

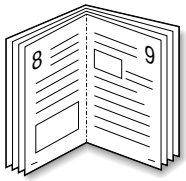

Portrait orientation

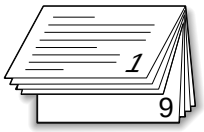

Landscape orientation

The Booklet printing feature allows you to print your document as a 2-sided (duplex) job and to arrange the pages so that the paper can be folded in half after printing to produce a booklet.

Note: To print booklet, you must use the Multi-Purpose Tray for the paper input source. Load paper in the Multi-Purpose Tray.

1 When you change the print settings from your software application, access the printer properties. See page 5.2 to access the printer properties.

From the **Paper** tab, select the paper orientation, source, size and type.

Note: For booklet printing, only four paper sizes are supported: Letter, A4, Legal, and Executive.

2 Click the **Output** tab, then choose **Booklet Printing** from the **Type** drop-down list.

When you select **Booklet Printing**, the **Manual 2 Sided Printing** option automatically changes to **Short Edge**. This setting is required to format the printed pages correctly.

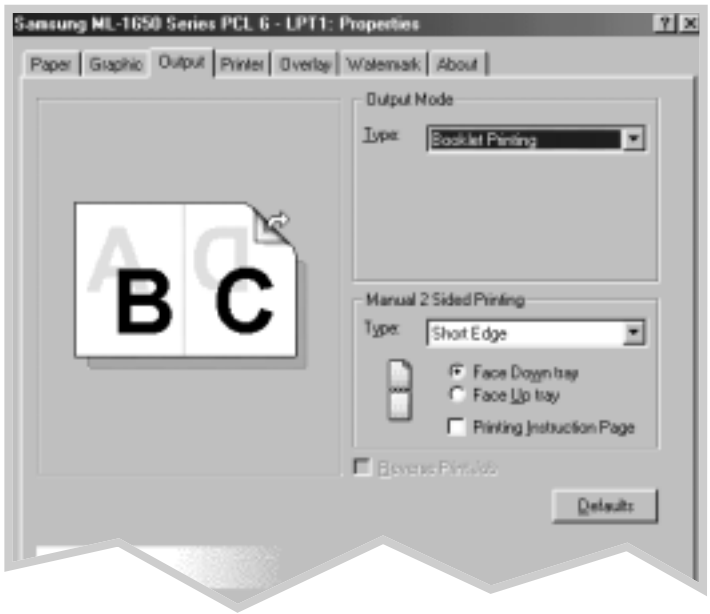

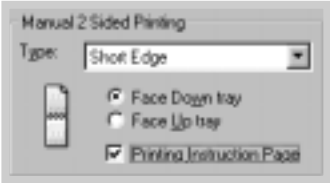

3 Select **Face Down Tray** (top output tray) or **Face Up Tray** (rear output tray) in which the printed media will be stacked. According to this option, the printer will determine the print page order when the second sides are printed.

4 If you want the instruction page which tells you how to load the paper, click **Printing Instruction Page**. If the box is checked, the printer prints the instruction page before the duplexing job is printed. If the box is empty, this feature is disabled.

5 Print the document.

6 After side one has been printed, remove the remaining paper from the Multi-Purpose Tray and set it aside until your booklet job is complete.

The printer prints side one as shown below for an 8-page document.

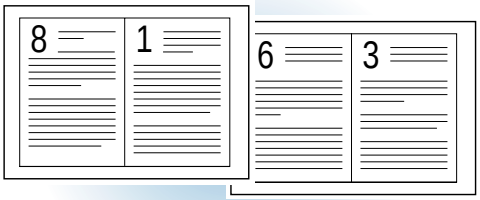

▲ 8 page document

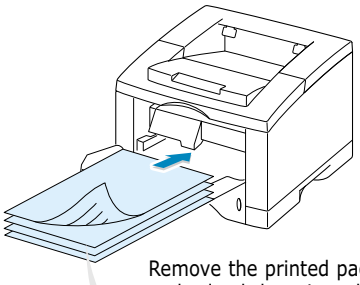

Remove the printed pages, and reload them into the Multi-Purpose Tray with **printed side face down**.

7 Gather up the printed pages, flip the stack, and then straighten the stack before placing it back in the multi-purpose tray. The following illustrations show how to put the paper back into the printer.

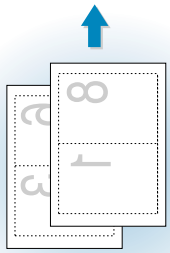

▲ **Face Up Tray** output

In **Portrait** orientation, insert the pages with **left edge** toward the printer.

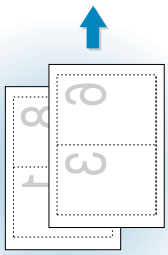

▲ **Face Down Tray** output

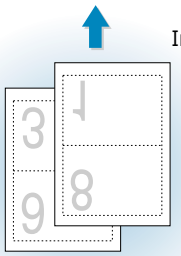

▲ **Face Up Tray** output

In **Landscape** orientation, insert the pages with **bottom edge** toward the printer.

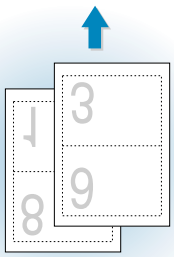

▲ **Face Down Tray** output

Note: If you have selected the **Face Up tray** option at Step 3, the last page is placed on the top of the stack. **Do not** rearrange the pages before reloading the pages. Your printer knows the stacked page order and will print the corresponding second side for each page.

8 You are prompted to reinsert the paper into the Multi-Purpose Tray. Click **OK** on the screen. The printer will finish printing.

9 Fold and staple the pages.

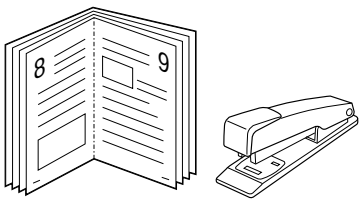

Printing on Different Paper for the First Page

1 When you change the print settings from your software application, access the printer properties. See page 5.2 to access the printer properties.

2 Click the **Paper** tab, and click **Different Source for First Page**.

If the box is checked, this feature is enabled and the dialog box allows you to select the desired paper source for the **First Page** and **Other Pages** independently. If the box is empty, this feature is disabled.

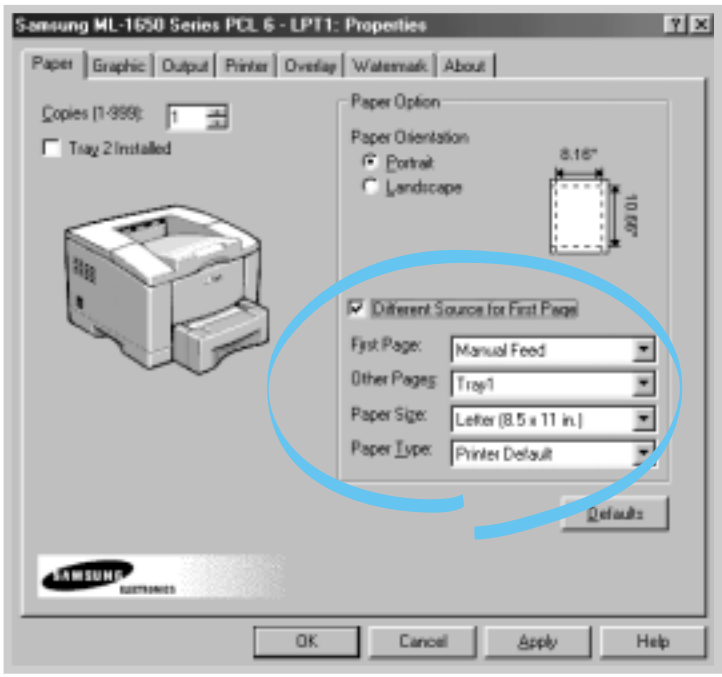

3 Click **OK**, then start printing.

Note: The paper size for all pages of the print job must be the same.

Fitting Your Document To a Selected Paper Size

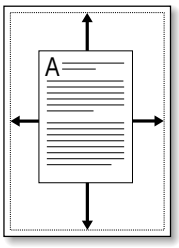

This printer feature allows you to scale your print job to any selected paper size regardless of the digital document size. This can be useful when you want to check fine details on a small document.

1 When you change the print settings from your software application, access the printer properties. See page 5.2 to access the printer properties.

2 Click the **Output** tab, and select **Fit to Page** in the **Type** drop-down list.

3 You'll see the **Application page size** and then you will be prompted to select the **Fit to Paper Size**. Select the correct size from the drop-down list.

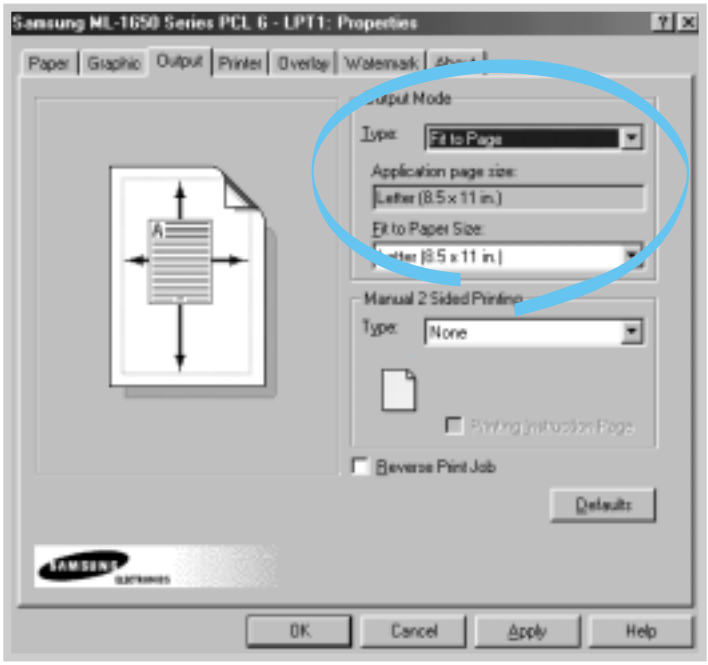

4 Click **OK**, then start printing.

Printing Posters

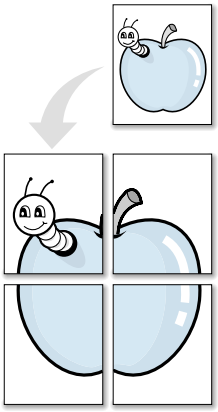

Poster printing
with 2x2 style

This feature allows you to print a single-page document onto 4, 9, or 16 sheets of paper, for the purpose of pasting the sheets together to form one poster-size document.

1 When you change the print settings from your software application, access the printer properties. See page 5.2 for more information on accessing printer properties.

From the **Paper** tab, select the paper orientation, source, size and type.

2 Click the **Output** tab, and select **Poster** in the **Type** drop-down list.

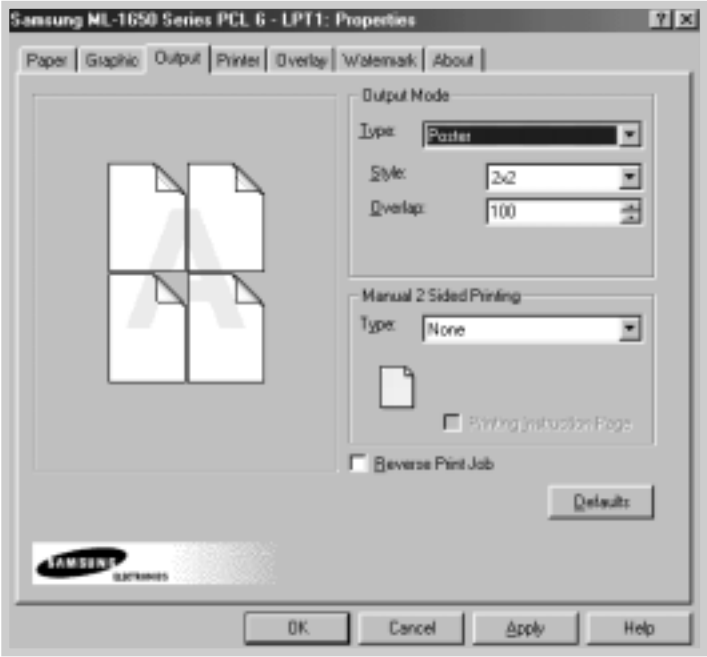

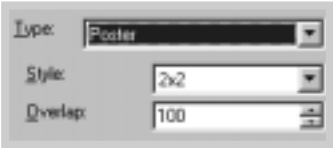

3 To determine the scaling factor, select the **Style**; **2x2**, **3x3**, **4x4** or **Custom**.

For example, if you select **2x2**, the output will be automatically stretched to cover 4 physical pages.

If you select **Custom**, you can adjust the scaling factor manually. For example, if you specify 150%, the image will be printed across 4 pages with 150% scaled.

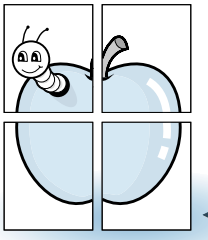

◀ 2 x 2

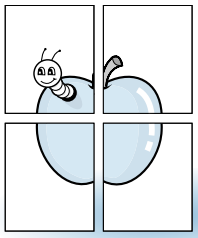

◀ Custom (150%)

4 You may specify an overlap in pixel to make it easier to reconstruct the resulting poster.

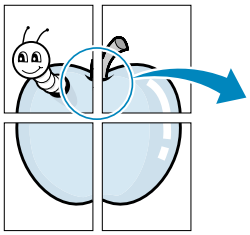

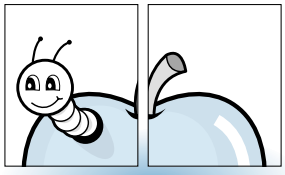

▲ Overlap=0

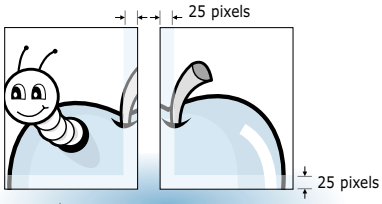

▲ Overlap=25

5 Click **OK**, then start printing.

Setting Graphic Properties

Use the following options to adjust the print quality for your specific printing needs when you access the printer properties. See page 5.2 for mor infomation on accessing printer properties.

If necessary, click the **Graphic** tab to display the settings shown below.

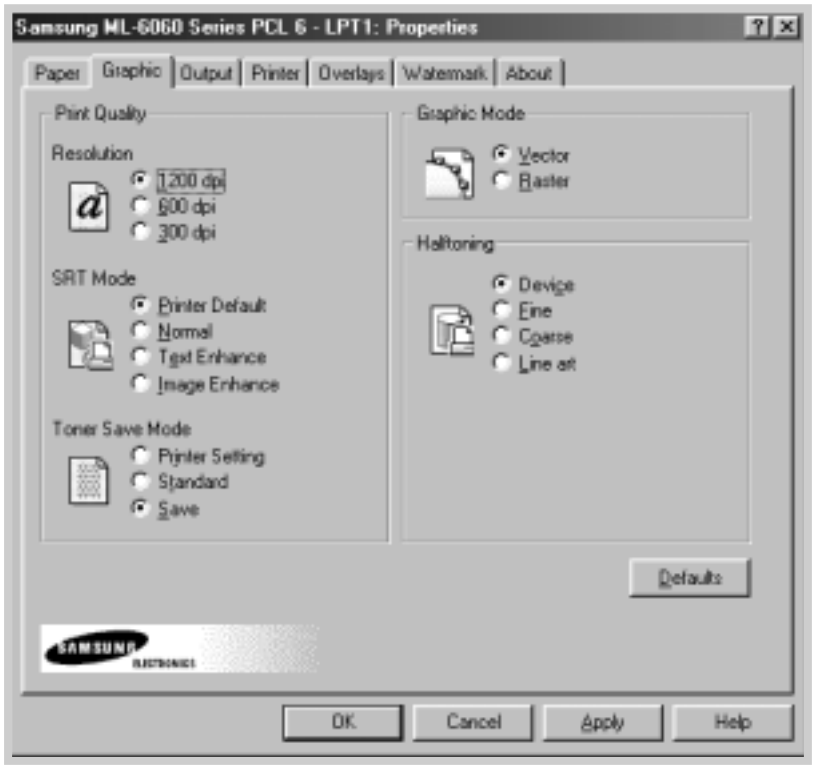

Resolution

You can select the printing resolution; **1200 dpi**, **600 dpi**, **300 dpi**. The higher the setting, the sharper the clarity of printed characters and graphics. Higher settings may increase the time it takes to print a document.

SRT Mode

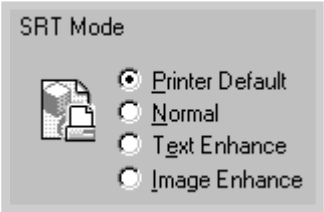

Some printed characters or images can appear to have jagged or uneven edges. Set this Samsung Resolution enhancement Technology (SRT) option to improve the print quality of your text and image and make the characters and images appear smoother.

Note: SRT Mode is disabled when the 1200 dpi settings are selected.

- **Printer Default** – Choose this setting to use SRT that your printer provides.
- **Normal** – SRT mode is disabled. Choose this setting if graphics, particularly scanned images, are not printing clearly.
- **Text Enhance** – This setting refines the print quality of characters by smoothing out jagged edges that can occur on the angles and curves of each character.
- **Image Enhance** – This setting refines the print quality of photo images using SRT.

Graphic Mode

This option can be used for configuring the printer to process graphics as raster or vector images. Setting this option tells Windows how to send graphic images to the printer. All graphics can be printed as raster images, however some geometric shapes or patterns print faster if they are printed as vector graphics.

- **Vector** – If you select the **Vector** setting, Windows will send graphics to the printer as a mixture of vector and bitmap images.
- **Raster** – When you select the **Raster** setting, Windows will send all graphics to the printer as bit map images.

Note: Not all graphic images can print using the Vector setting. If you are using the Vector setting, and your graphic images do not print as they appear on your computer screen, select the Raster setting and reprint your graphic.

Halftoning

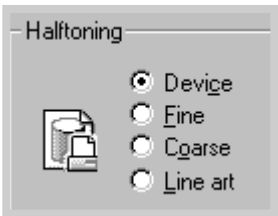

This option can be used for configuring the halftone of the printed illustration. The best way to choose a Halftoning setting for your graphic image is to experiment. Print a graphic image at each setting and choose the one you like best.

- **Device** – Choose this setting for printed graphic image that printer provides.
- **Fine** – Choose this setting for printed images that you want to have a smooth, realistic and photographic appearance. This setting provides soft contrasts between various shades of gray. This setting also works well for images originally designed with color.
- **Coarse** – Choose this setting if your graphic images were originally scanned in through a scanner.
- **Line art** – Choose this setting for graphic images with intricate lines and fine detail, like clip art graphics. This setting provides solid lines and sharp contrasts between shaded areas.

Printing Watermarks

The Watermark option allows you to print text over an existing document. For example, you may want to have large gray letters reading "Draft" or "Confidential" printed diagonally across the first page or all pages of a document.

There are several predefined watermarks that come with the ML-1650 series printer, and they can be modified or you can add new ones to the list.

5

To use an existing watermark

1 When you change the print settings from your software application, access the printer properties. See page 5.2 for more information on accessing printer properties.

2 Click the **Watermark** tab, and select the desired watermark in the **Message** drop-down list. You will see the selected watermark in the preview window.

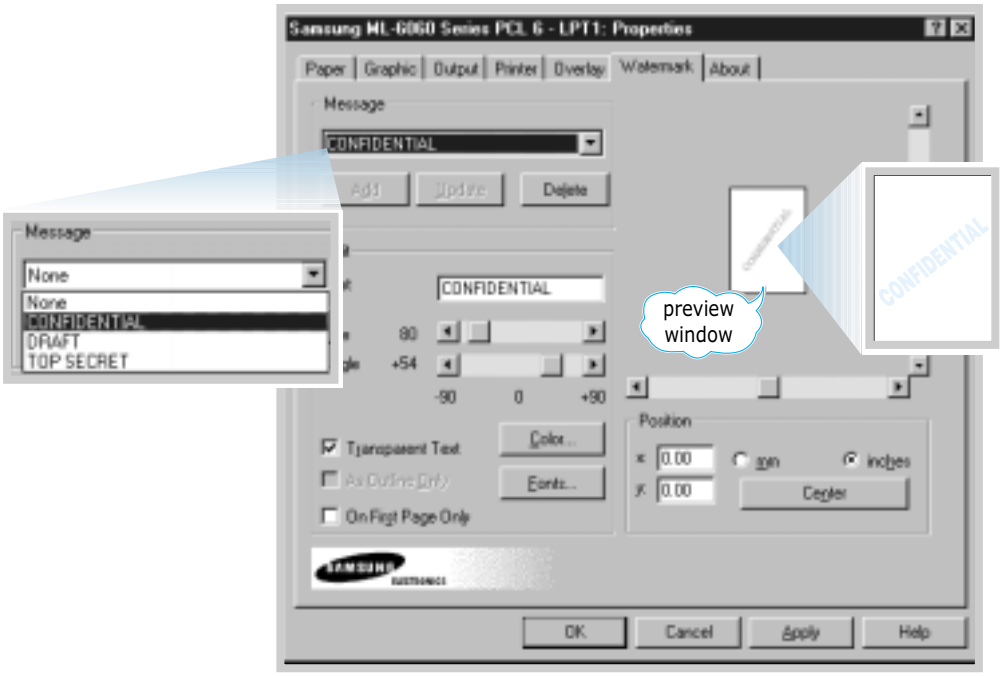

3 Click **OK**, then start printing.

To create or edit a watermark

1 When you change the print settings from your software application, access the printer properties. See page 5.2 for more information on accessing the printer properties.

2 Click the **Watermark** tab, and enter the desired text message in the **Text** field. This will be displayed in the preview window. The preview window is provided so that you can see how the watermark will appear on the printed page.

3 Select the desired watermark options. You can select the font type and size, color and angle. There are three checkboxes at the bottom of the dialog box:

- **Transparent Text** – Allows the document to show through the watermark.
- **As Outline Only** – Prints the text outline of the watermark. This setting globally effects all watermarks in the list.
- **On First Page Only** – Prints the watermark only on the first page.

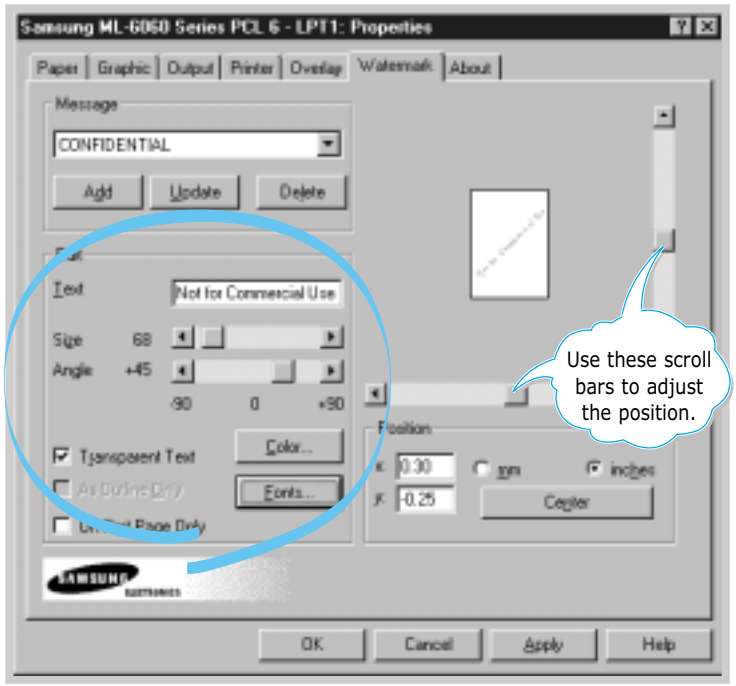

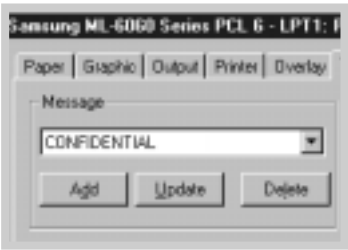

4 If you have created a new or edited an existing watermark, the **Add** and **Update** button is enabled.

To add a new watermark to the list, click **Add**.

5 If you want to edit, select the desired watermark from the list, edit, then click **Update**.

6 When you complete the edit, click **OK**, then start printing.

To stop printing the watermark, select **None** in the Message drop-down list.

To delete a watermark

1 When you change the print settings from your software application, access the printer properties. See page 5.2 for more information on accessing the printer properties.

2 From the **Watermark** tab, select the watermark you want to delete in the **Messages** drop-down list.

3 Click **Delete**.

4 Click **OK**.

Using Page Overlay

What is an Overlay?

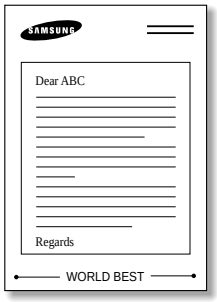

An overlay is text and/or images stored in the computer HDD as a special file format that can be printed on any document you choose. Overlays are often used to take the place of preprinted forms and letterhead paper. Rather than using preprinted letterhead, for example, you can create an overlay containing the exact same information that is currently on your letterhead. Then when you want to print a letter with your company's letterhead, you do not need to load preprinted letterhead paper in the printer. You need only to tell the printer to print the letterhead overlay on your document.

Creating a New Page Overlay

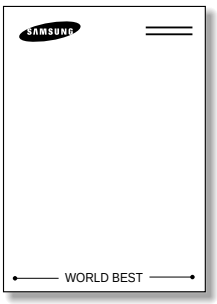

To use a page overlay, you must create a new page overlay containing your logo or image.

1. Create or open a document containing a text or image you want to use for page overlay. Position the items exactly as you wish them to appear when printed as an overlay. If needed, save the file for later use.

2. Select **Print** from the **File** menu. Then click **Properties** in the application's Print dialog box to access the printer properties. For details, see page 5.2.

3. Click the **Overlays** tab, and click **Create Overlay**.

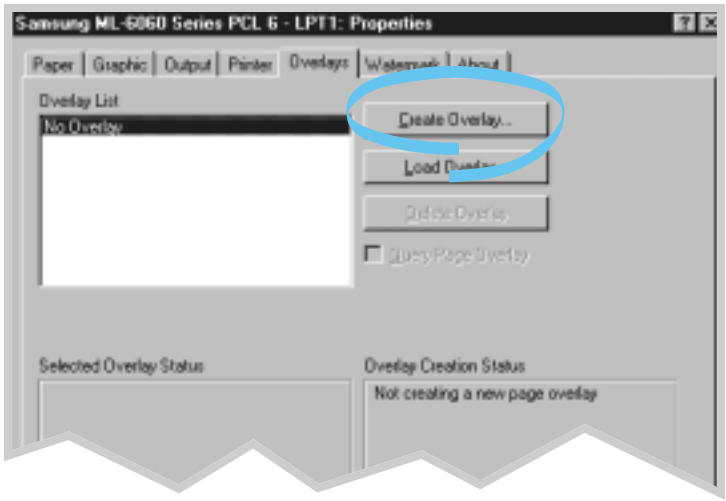

4 In the Create Overlay dialog box, type a name of up to eight characters in the **File name** box. Select the destination path if necessary. (The default is C:\FORMOVER).

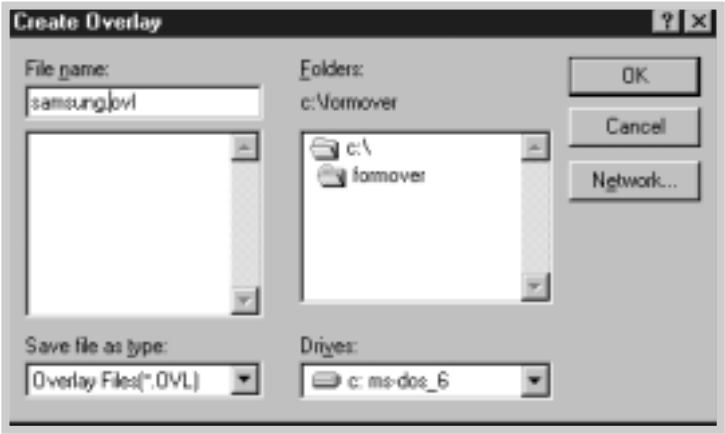

5 Click **OK**. You will see the name in the **Overlay List** box.

6 Click **OK** or **Yes** until you complete the creation.

The file is not printed out. Instead it will be stored on your computer HDD disk.

Note: The overlay document size must be the same as documents you will print with the overlay.

Using Page Overlay

After an overlay has been created, it is ready to be printed with your document. To print an overlay with a document:

1 Create or open the document you want to print.

2 When you change the print settings from your software application, access the printer properties. See page 5.2 to access the printer properties.

3 Click the **Overlays** tab, and select the desired overlay from the **Overlay List** box.

4 If the desired overlay file does not appear in the **Overlay List** box, click **Load Overlay**, and select the overlay file.

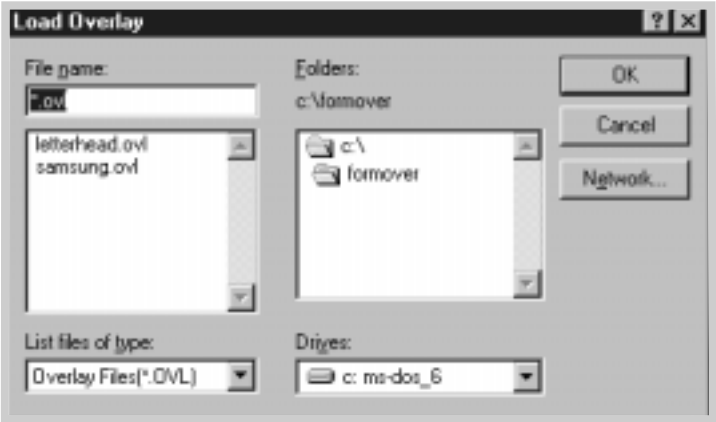

If you have stored the overlay file you want to use into an external source, you can also load the file when you access this Load Overlay window.

After you select the file, click **OK**. The file is now shown in the **Overlay List** box and is available for printing. Select the overlay from the **Overlay List** box.

5 If necessary, click **Query Page Overlay**. If this box is checked, a message box will appear each time you submit a document for printing, asking you to confirm your wish to print an overlay on your document.

Answering **Yes** to the message box means that the selected overlay will be printed with your document.
Answering **No** to the message box cancels overlay printing.

If this box is empty, and an overlay has been selected, the overlay will be automatically printed with your document.

6 Click **OK** or **Yes** until the printing starts.

The selected overlay will be downloaded with your print job and printed on your document.

Deleting a Page Overlay

You can delete page overlays that are no longer used.

1 In the printer properties dialog box, click the **Overlays** tab.

2 Select the overlay you want to delete from the **Overlay List** box.

3 Click **Delete Overlay**.

4 Click **OK** until you exit the Print dialog box.

chapter 6

Maintaining Your Printer

This chapter provides suggestions for high-quality and economical printing and information for maintaining the toner cartridge and the printer.

Topics included in this chapter are:

- Maintaining Toner Cartridge
- Cleaning the Printer

Maintaining Toner Cartridge

Toner cartridge storage

To get the most from the toner cartridge, keep the following guidelines in your mind.

- Do not remove the toner cartridge from its package until you are ready to use it. The shelf life of a cartridge in an unopened package is approximately 2 years. The shelf life of a cartridge in an opened package is approximately 6 months.
- Do not refill toner cartridges. **The printer warranty does not cover damage caused by using a refilled cartridge.**
- Store toner cartridges in the same environment as the printer.
- Do not remove a toner cartridge from the printer except to replace it, clean it or clear a paper jam. Replace the cartridge immediately.
- To prevent damage to the toner cartridge, do not expose it to light for more than a few minutes.

Toner cartridge life expectancy

The life of the toner cartridge depends on the amount of toner that print jobs require. When printing text at 5 % coverage, a new toner cartridge lasts an average of 8,000 pages. (But, the toner cartridge supplied with the printer lasts an average of 4,000 pages.)

Recycling toner cartridge

After you install a new toner cartridge (see page 2.2), follow the instructions included in the toner cartridge box to recycle the old cartridge.

Saving toner

To save toner, press the **Toner Save** button on the printer control panel. The button will be lit. You can also enable the **Toner Save Mode** in your printer properties. Refer to "Using Toner Save Mode" on page 5.6. Selecting this option will expand the life of the toner cartridge and reduce your cost per page, but will reduce print quality.

Redistributing Toner

When toner is low, faded or light areas may appear on a printed page. You may be able to temporarily improve print quality by redistributing the toner. The following procedures may allow you to finish the current print job before replacing the toner cartridge.

1 Open the top cover.

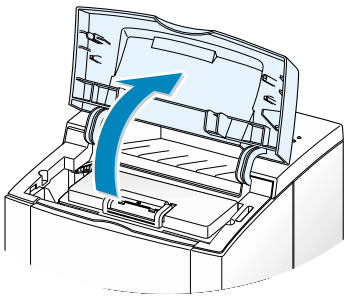

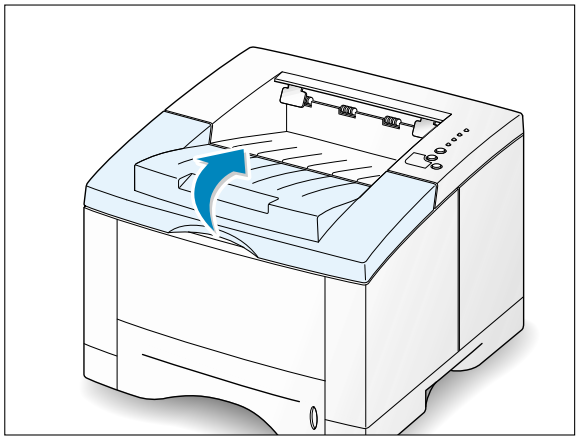

2 Remove the toner cartridge from the printer.

CAUTIONS:

- **Avoid reaching too far into the printer. The fusing area may be hot.**
- **To prevent damage to the toner cartridge, do not expose it to light for more than a few minutes.**

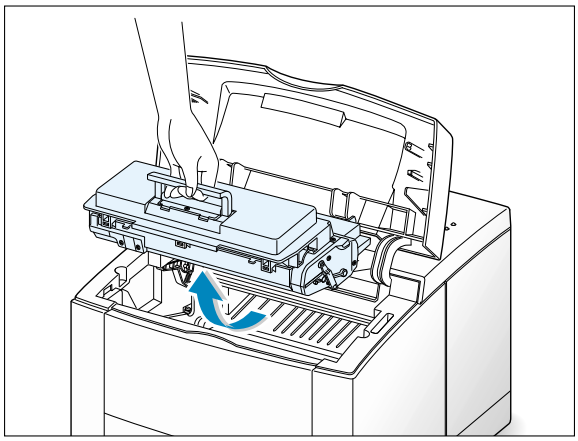

3 Gently shake the toner cartridge from side to side 5 or 6 times to redistribute the toner.

Note: If the toner gets on your clothing, wipe it off with a dry cloth and wash clothing in cold water. Hot water sets toner into fabric.

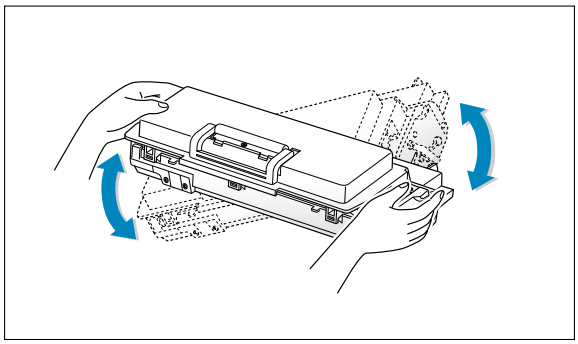

4 Reinsert the toner cartridge into the printer. Be sure that the toner cartridge is firmly in its place.

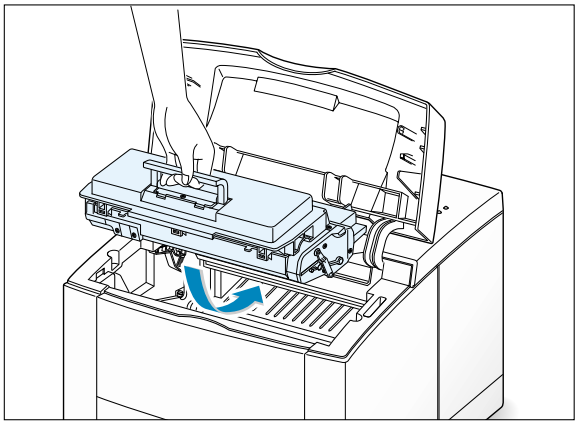

5 Firmly close the cover.

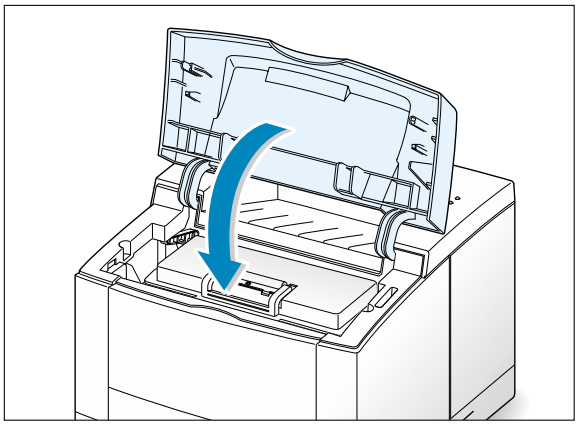

If the print remains light

Remove the old cartridge and install a new toner cartridge. See "Install the Toner Cartridge" on page 2.2.

Cleaning the Printer

To maintain print quality, follow the cleaning procedures below every time the toner cartridge is replaced or whenever print quality problems occur. As much as possible, keep the printer free from dust and debris.

Notes:

- **Do not use ammonia-based cleaners or volatile solvents such as thinner, on or around the printer. These can damage the printer.**
- **While cleaning the inside of the printer, be careful not to touch the transfer roller (located underneath the toner cartridge). The oil from your hands on the roller can cause print quality problems.**

Cleaning the Outside

Wipe the outside surface of the printer with a soft, clean, lint-free cloth. You can dampen the cloth slightly with water, but be careful not to be let any water drip onto the printer or inside of it.

Cleaning the Inside

During the printing process, paper, toner, and dust particles can accumulate inside the printer. Over time, this buildup can cause print quality problems such as toner specks or smearing. Cleaning inside the printer will eliminate or reduce these problems.

Cleaning inside the printer

1. **Turn the printer off** and unplug the power cord, then wait for the printer to cool.
2. Open the top cover and remove the toner cartridge.
3. With a dry, lint-free cloth, wipe away any dust and spilled toner from the toner cartridge area and the toner cartridge cavity.

Note: To prevent damage to the toner cartridge, do not expose it to light for more than a few minutes. Cover it with a piece of paper, if necessary. Also, do not touch the black transfer roller inside the printer. By doing so, you can damage the printer.

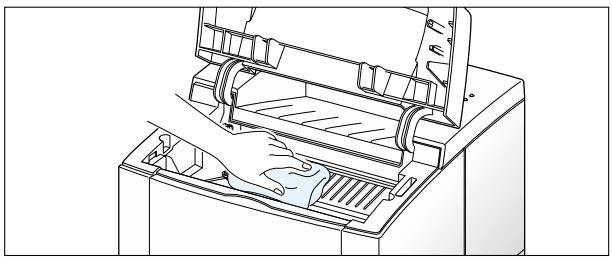

4 Locate the long strip of glass (LSU) inside the top of the cartridge compartment, and gently swab the glass to see if dirt turns the white cottom black.

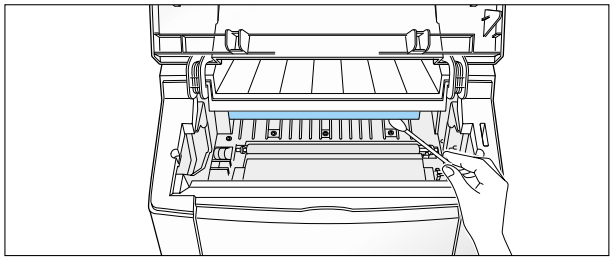

5 Reinsert the toner cartridge and close the top cover. Then, turn the printer on.

Printing a cleaning sheet

Printing a cleaning sheet cleans the drum inside the toner cartridge. Use this process if you are experiencing blurred, faded or smeared printouts. This process will produce a page with toner debris, which should be discarded.

1 Make sure the printer is turned on and in the ready state and that there is paper loaded in the paper tray.

2 Press and hold **Demo** on the control panel for about 10 seconds until all control panel lights remain steadily lit, then release.

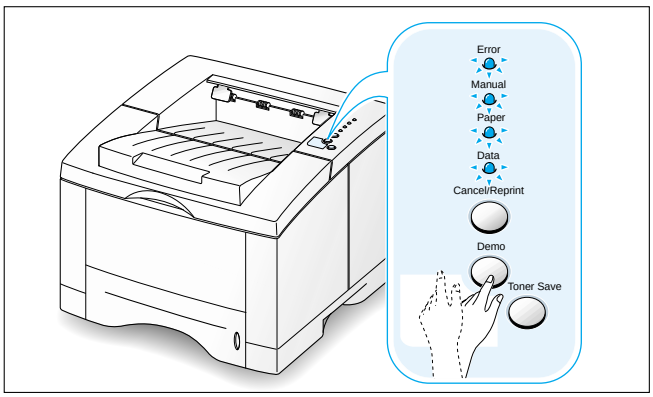

3 Your printer automatically picks up a sheet of paper from the paper tray and prints out a cleaning sheet with the dust or toner particles on it.

chapter 7

Problem Solving

This chapter gives helpful information for what to do if you encounter a printer error. It provides information on the following topics:

- Troubleshooting Checklist
- Solving General Printing Problems
- Printing Special Pages
- Clearing Paper Jams
- Solving Print Quality Problems
- Troubleshooting Error Messages
- Common Windows Problems
- Common Macintosh Problems
- Troubleshooting PS Errors

Troubleshooting Checklist

If the printer is not working properly, complete the following checklist in order. If the printer does not pass a step, follow the corresponding troubleshooting suggestions.

Check	Solution
Make sure that the **Data** light on the control panel is on.	• If no lights are on, check the power cord connection. Check the power switch. Check the power source by plugging into another outlet. • If other lights are on, go to "Troubleshooting Error Messages" on page 7.22.
Press the **Demo** button to print a demo page to verify that the printer is feeding paper correctly. See page 7.6.	• If a demo page does not print, check the paper supply in the paper tray. • If the paper jams in the printer, go to " Clearing Paper Jams" on page 7.7. • If the **Error** indicator light is illuminated on the control panel, go to "Troubleshooting Error Messages" on page 7.22.
Check the demo page to see if it is printed correctly.	If there is a print quality problem, go to "Solving Print Quality Problems" on page 7.16.
Print a short document from a software application to verify that the computer and printer are connected and are communicating correctly.	• If the page does not print, check the cable connection between the printer and computer. • Check the print queue or print spooler (print monitor in Mac) to see if the printer has been paused. • Check the software application to make sure you are using the proper printer driver and communication port. If the page is interrupted during printing, go to "Solving General Printing Problems" on page 7.2.
If completing the checklist did not diagnose the problem with the printer, check the following troubleshooting sections.	• "Solving General Printing Problems" on page 7.2. • "Troubleshooting Error Messages" on page 7.22. • "Common Windows Problems" on page 7.24. • "Common Macintosh Problems" on page 7.25. • "Troubleshooting PS Errors" on page 7.27.

Solving General Printing Problems

If you have any problems with the operation of your ML-1650 series printer, refer to the table for suggested solutions.

Problem	Possible Cause	Solution
The printer does not print.	The printer is not receiving power.	If no lights are on, check the power cord connections. Check the power switch and the power source.
	Your printer is not selected as the default printer.	Select **Samsung ML-1650 Series PCL 6** or **Samsung ML-1650 Series PS** as your default printer.
	Check the printer for the following:	• The printer cover is not closed. • Paper is jammed. • No paper is loaded. • Toner cartridge is not installed. • Printer system error occurs. Contact a service representative.
	The printer may be in manual feed mode and out of paper. (The **Manual** and the **Data** lights are blinking.)	Add paper to the Multi-Purpose tray, and press the **Demo** button on the printer's control panel.
	The connection cable between the computer and the printer is not connected properly.	Disconnect the printer cable and reconnect it.
	The connection cable between the computer and the printer is defective.	If possible, attach the cable to another computer that is working properly and print a job. You may also try using a different printer cable.
	The port setting is incorrect.	Check the Windows printer setting to make sure that the print job is sent to the correct port (for example, LPT1). If the computer has more than one port, make sure the printer is attached to the correct one.

Problem	Possible Cause	Solution
The printer does not print. (continued)	The printer may be configured incorrectly.	Check the printer properties to make sure that all print settings are correct.
	The printer driver may be incorrectly installed.	Uninstall the printer driver, then reinstall the printer driver. Try printing a demo page.
	The printer is malfunctioning.	Check the lights on the control panel to determine if the printer is indicating a system error.
Printer selects media from the wrong paper source.	The paper source selection in the printer properties may be incorrect.	For many software applications the paper source selection is found under the **Paper** tab within the printer properties. Select the correct paper source.
Paper does not feed into the printer.	Paper has not been loaded correctly.	Remove paper from the paper tray and reload it correctly.
	There is too much paper in the paper tray.	Remove excess paper from the tray .
	The paper is too thick.	Use only paper that meets the specifications required by the printer.
Print job is extremely slow.	The job may be very complex. The maximum speed of 16 pages per minute cannot be exceeded even when more memory is added.	Reduce the complexity of the page or try adjusting the print quality settings. If this problem occurs frequently, add memory to the printer.
	If using Windows 95, the Spooling Setting may be set incorrectly.	From the **Start** menu, choose **Settings** and **Printers**. Right-click the Samsung ML-1650 series printer icon, choose **Properties**, click the **Details** tab, and then choose the **Spool Settings** button. Select the desired spool setting from the available choices.

Problem	Possible Cause	Solution
Print job is extremely slow. (continued)	The computer may have insufficient random-access memory (RAM).	Install more random-access memory (RAM) in your computer. See "Memory and PostScript DIMMs" on page H.2.
Half of the page is blank.	The page layout is too complex.	Simplify the page layout and remove any unnecessary graphics from the document, if possible. Install more memory. See "Memory and PostScript DIMMs" on page H.2.
	The page orientation setting may be incorrect.	Change the page orientation in your application.
	The paper size and the paper size settings do not match.	Make sure that the paper size in the print settings matches the paper in the paper tray.
The paper keeps jamming.	There is too much paper in the paper tray.	Remove excess paper from the tray. If printing special media, use the Multi-Purpose Tray.
	An incorrect type of paper is being used.	Use only paper that meets the specifications required by the printer.
	An incorrect output method is being used.	Media such as thick paper should not be printed using the standard face-down stacker. Use the rear face-up output tray instead.
	There may be debris inside the machine.	Open the top cover and remove the debris.

Problem	Possible Cause	Solution
The printer prints, but the text is wrong, garbled, or incomplete.	The printer cable is loose or defective.	Disconnect the printer cable and reconnect it. Try a print job that you know works. If possible, attach the cable and printer to another computer and try a print job that you know works. Finally, try a new printer cable.
	The wrong printer driver was selected.	Check the application's printer selection menu to make sure that your printer is selected.
	The software application is malfunctioning.	Try printing a job from another application.
	The operating system is malfunctioning.	If printing from Windows (any version), exit to a Dos prompt and verify functionality with the following command: At a **C:** prompt, type **Dir LPT1**, then press **Enter**. (This assumes you are connected to LPT1.) Exit Windows and reboot the computer. Turn the printer off and then back on again.
Pages print, but are totally blank.	The toner cartridge is defective or out of toner.	Replace the toner cartridge.
	The sealing tape may still be in the toner cartridge.	Remove the toner cartridge and pull out the sealing tape. Reinstall the toner cartridge, and check by printing a demo page.
	The file may have blank pages.	Check the file to make sure that it does not contain blank pages.
	Some parts, such as the controller or the board may be defective.	Contact a service representative.

Printing Special Pages

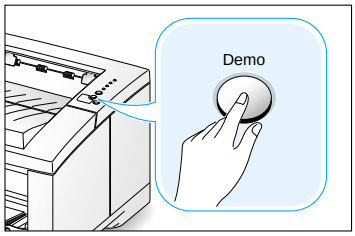

There are special pages within the memory of the printer that will help you to diagnose and learn about problems with your printer.

Use the **Demo** button on the printer control panel to print these special pages. The printer must be in the ready mode.

Demo Page

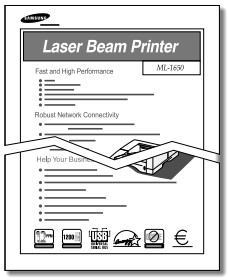

Printing the demo page will help you check if the printer is properly working.

Press and hold **Demo** for about 2 seconds until the control panel lights blink slowly.

Configuration Sheet

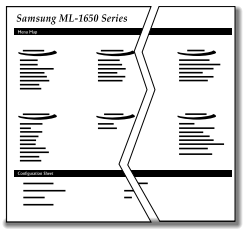

The configuration sheet lists many of the current settings and properties of the printer.

To print the configuration sheet, press and hold **Demo** for about 6 seconds until the control panel lights blink rapidly.

Cleaning Sheet

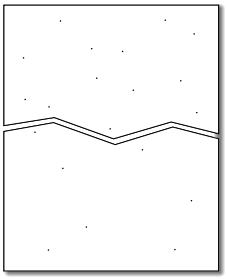

This printing cleans the drum of the toner cartridge. Use this process if you are experiencing blurred, faded or smeared printouts.

Press and hold **Demo** for about 10 seconds until the control panel lights remain illuminated. Discard the blank page produced from the cleaning process.

Note: The cartridge cleaning process takes some time. To stop the printing, turn the power off.

Clearing Paper Jams

Occasionally, paper can become jammed during a print job. Some of the causes include:

- The paper tray is loaded improperly or overfilled.
- The paper tray has been pulled out during a print job.
- The top cover has been opened during a print job.
- Paper that does not meet paper specifications has been used. See "Paper Specifications" on page A.2.
- Paper that is outside of the supported size range has been used. See "Paper Specifications" on page A.2.

If a paper jam occurs, the **Paper** and the **Error** lights remain lit on the control panel. Find and remove the jammed paper. If the location of the paper jam is not obvious, look inside the printer.

Output Area

7

Note: Paper jams in this area may result in loose toner on the page. If you get any toner on your clothes, wash them in cold water because hot water will set the toner into the fabric.

1 If the paper is almost completely visible from the top output tray, pull the remaining paper carefully out of the printer.

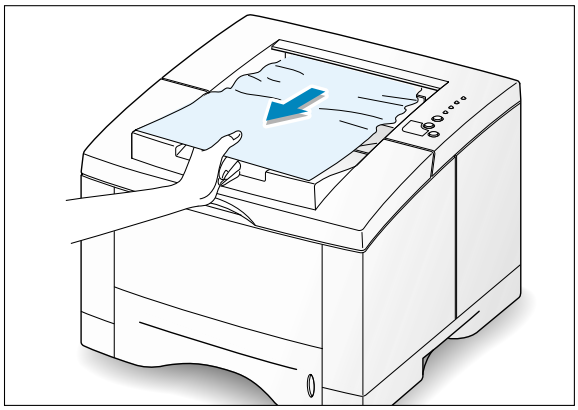

2 If the jammed paper is not visible or there is resistance when you pull the paper, open the rear output tray.

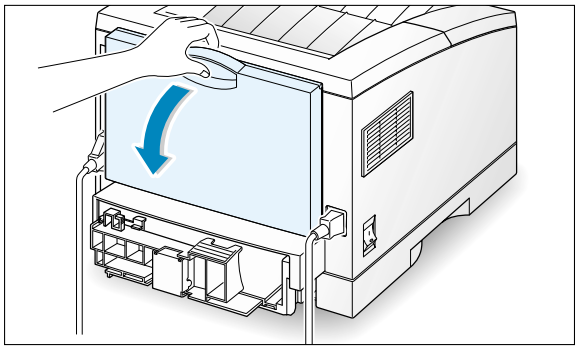

3 Remove the stopper fastening the rear output tray, and push the tray down so that it is open at 90 degrees angle.

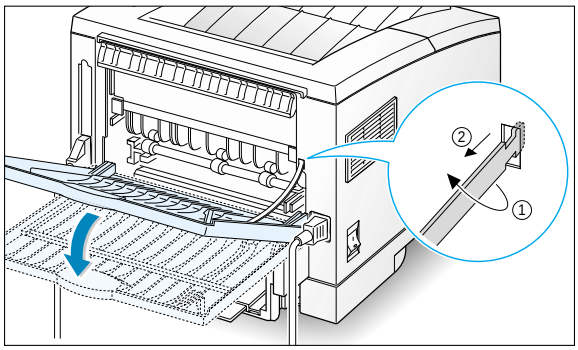

4 If there is resistance when you pull the paper, squeeze the handle on the right end of the exit roller ❶, then pull the roller in the direction of arrow ❷.

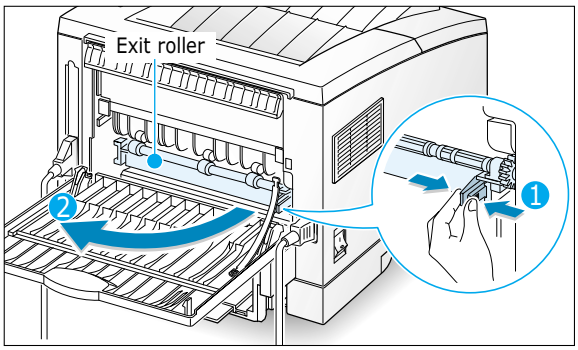

5 Remove the jammed paper.

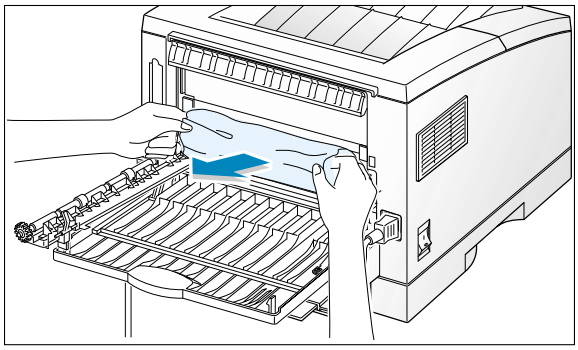

6 Replace the exit roller.

Make sure that you click the right end of the roller back in place. If you fail to do so, the printer system will recognizes that the printer cover is open or that a system fuser error has occurred, and the **Error** light on the control panel will turn on.

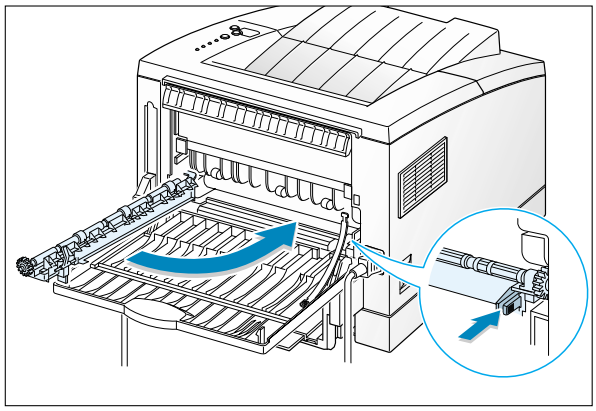

7 Replace the stopper and close the rear output tray.

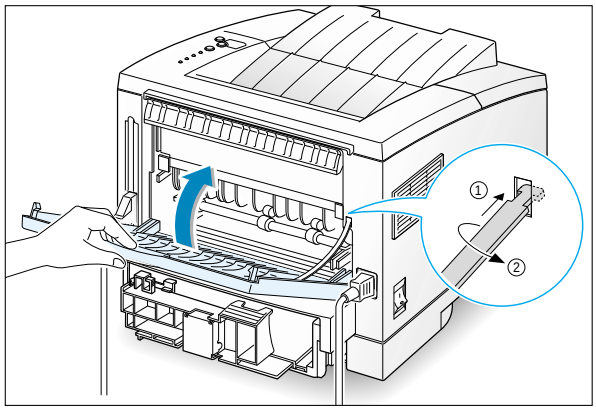

8 To resume printing, open the top cover, and then close it close it again.

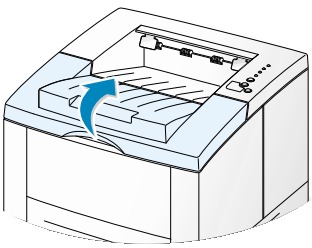

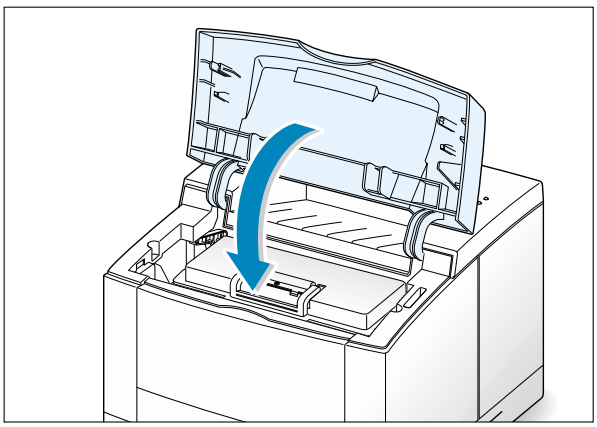

Note: If the Paper and the Error lights do not turn off, there is still jammed paper inside the printer. Check the input area and the inside of the printer.

Input Area

Note: **If paper has entered the toner cartridge area, follow the instructions on page 7.12. It is easier to remove such jams from the inside of the printer than the paper input area.**

1 Slide out Tray 1 to expose the jammed paper.

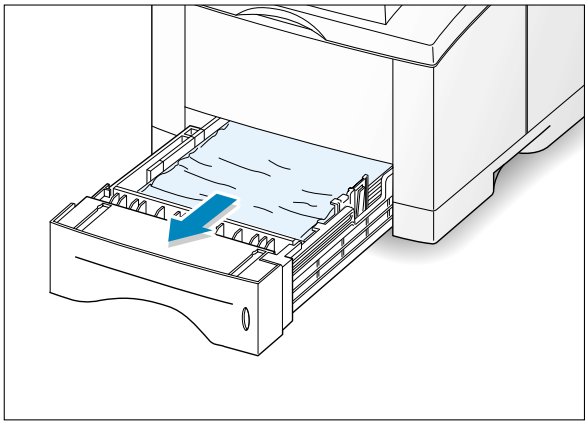

2 Remove any misfed paper by pulling it out by the visible edge from the tray. Make sure that all of the paper is properly aligned in the tray.

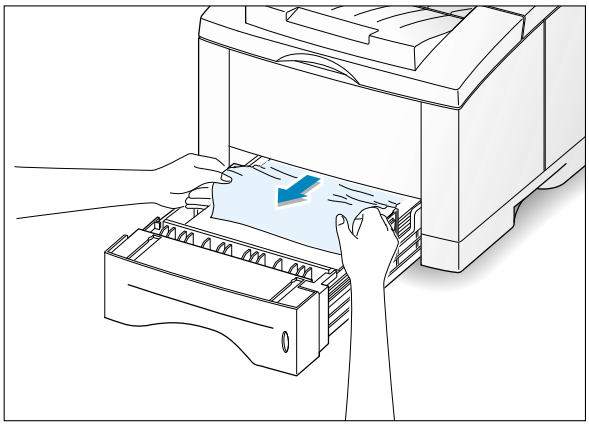

Note: **If the paper is jammed in the paper feed area and cannot be accessed from inside the printer, remove Tray 1 from the printer and carefully pull the jammed paper free from the printer.**

3 Slide the tray back into the printer.

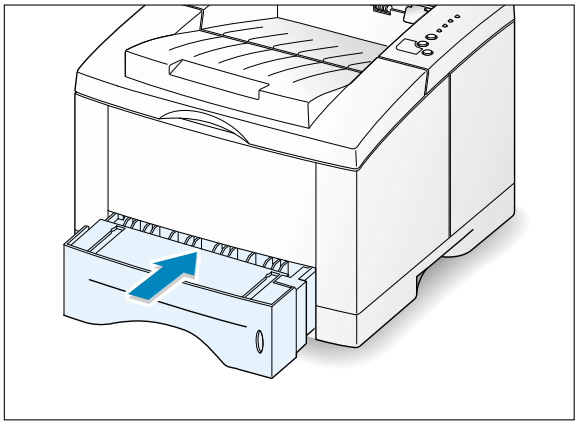

4 To resume printing, open the top cover, and then close in again.

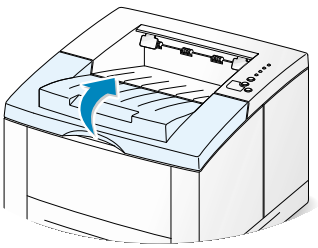

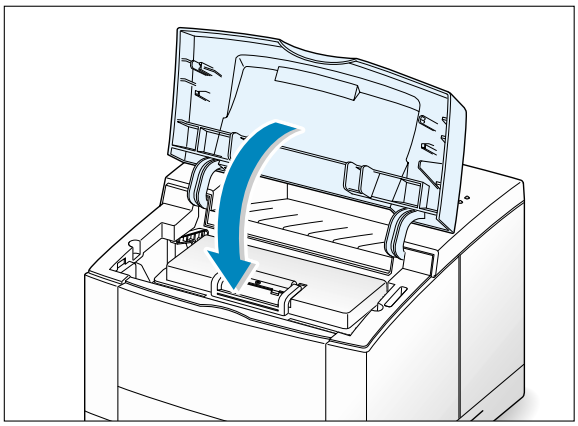

Note: If the **Paper** and the **Error** lights do not turn off, there is still jammed paper inside the printer. Check the inside of the printer.

Inside the Printer

Note: Paper jams in this area may result in loose toner on the page. If you get any toner on your clothes, wash them in cold water because hot water will set the toner into the fabric.

1 Open the top cover and remove the toner cartridge.

CAUTION: To prevent damage to the toner cartridge, do not expose it to light for more than a few minutes. Place a piece of paper over the top of the toner cartridge to shield it while it is out of the printer.

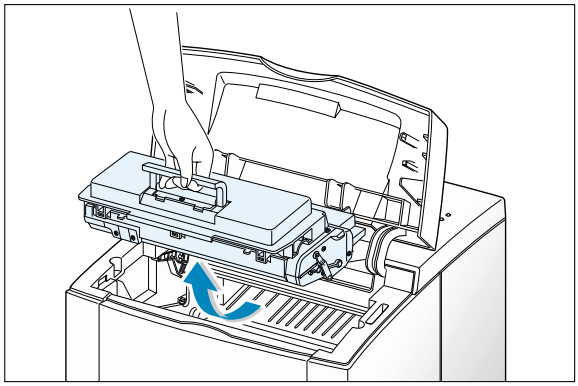

2 Carefully lift up the guide feed.

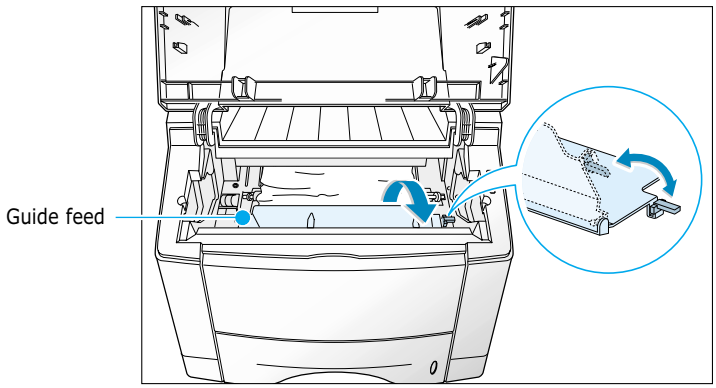

3 Gently pull the paper toward you to remove it from the printer.

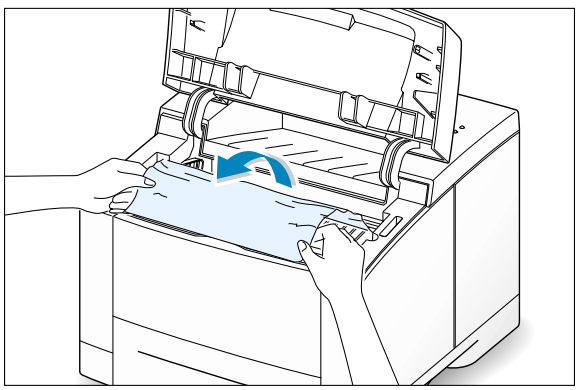

4 Flip down the guide feed, and reinstall the toner cartridge.

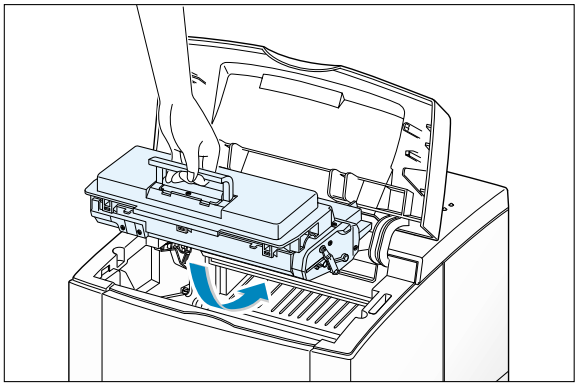

Note: If the toner cartridge is difficult to reinstall, make sure the guide feed has been flipped back down into position.

5 Close the top cover. Printing can be resumed.

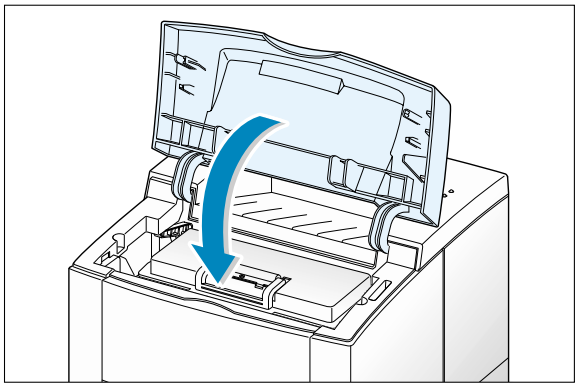

Note: If you have the optional Tray 2 installed, and cannot find the jammed paper in the output or input area, or inside the printer, the paper jam may have occurred in the optional Tray 2. See the next page to clear the jammed paper in the optional tray.

In the Optional Tray 2

1 Pull the option Tray 2 out of the printer.

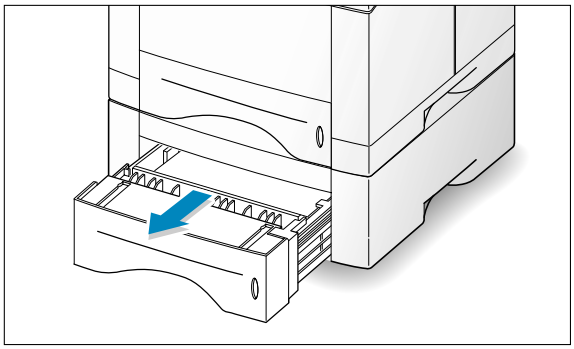

2 If you see the jammed paper, remove the paper from the tray.

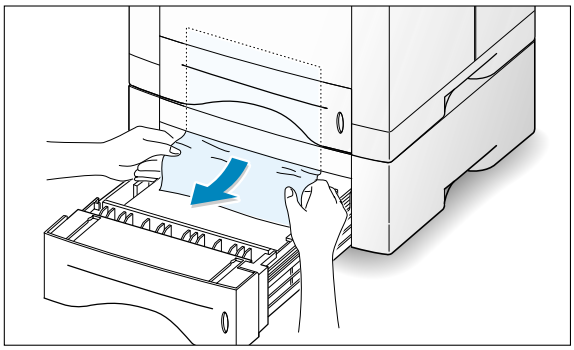

3 If you cannot find the jammed paper in the Tray 2, pull the upper Tray 1 half way out of the printer, and remove the paper as shown in the figure at right.

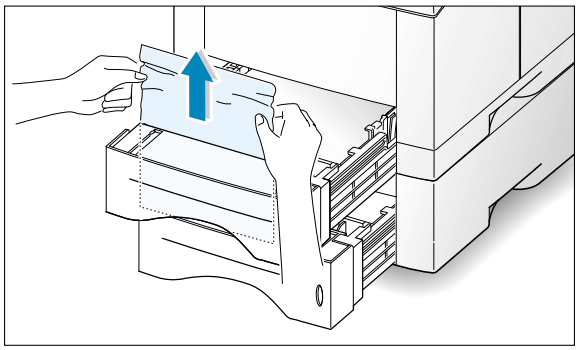

4 Slide the trays back into the printer. Open the top cover, then close it again. Printing can be resumed.

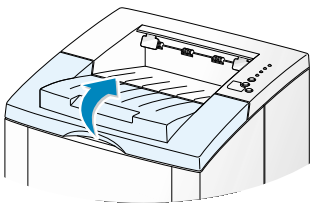

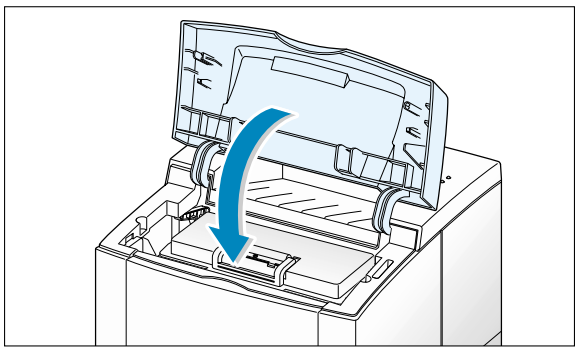

Tips for Avoiding Paper Jams

By selecting correct paper types and loading them properly, you should be able to avoid most paper jams. If paper jams occur, follow the steps outlined in "Clearing Paper Jams" on page 7.7. If jams occur frequently, make sure you are following these tips to avoid jams.

- Follow the procedures in "**Load Paper**" on page 2.4 to load the paper properly. Make sure the adjustable guides are positioned correctly.
- Do not overload the paper tray. Make sure the paper is under the paper capacity mark on the inside of the paper tray.
- Do not pull out the paper tray while print jobs are in process.
- Flex, fan and straighten the paper before loading it.
- Do not load stacks of labels or transparencies in Tray 1. Labels or transparencies must be fed using the Multi-Purpose Tray.
- Do not load wrinkled, creased, damp or highly curled paper.
- Do not mix paper types in the paper tray.
- Use only recommended print media. See "Paper Specifications" on page A.2.
- Make sure that the recommended print side is facing down when loading the paper into Tray 1 or optional Tray 2 and facing up when loading into the Multi-Purpose Tray.
- Keep print media stored in an acceptable environment.

Solving Print Quality Problems

Print Quality Checklist

General print quality problems can be solved by following the checklist below.

- Check the printer properties to make sure that you are using the best available print quality option (see page 5.18).
- Redistribute the toner in the toner cartridge (see page 6.2).
- Clean the inside of the printer (see page 6.4).
- Adjust the print resolution from the printer properties (see page 5.19).
- Check to make sure that Toner Save Mode is off (see page 5.6).
- Troubleshoot general printing problems (see page 7.2).
- Install a new toner cartridge, then check print quality again (see page 2.2).

Solving Print Quality Problems

Problem	Solution
Light or feded print 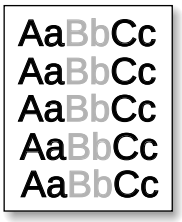 	If a vertical white streak or faded area appears on the page: • The toner supply is low. You may be able to temporarily extend the toner cartridge life. See "Redistributing Toner" on page 6.2. If this does not improve the print quality, install a new toner cartridge. • The paper may not meet paper specifications (for example, the paper is too moist or too rough). See "Paper Specifications" on page A.2. • If the whole page is light, the print resolution setting is too light or Toner Save Mode may be on. Adjust the print resolution and Toner Save Mode within the printer properties. See page 5.18. • A combination of faded and smeared defects may indicate that the toner cartridge needs cleaning. See "Cleaning the Printer" on page 6.4. • The surface of the LSU part inside the printer may be dirty. Clean the LSU (see page 6.5).

Problem	Solution
Toner specks 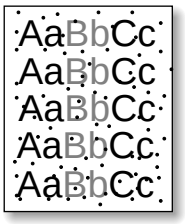	• The paper may not meet paper specifications (for example, the paper is too moist or too rough). See "Paper Specifications" on page A.2. • The transfer roller may be dirty. See "Cleaning the Inside" on page 6.4. • The paper path may need cleaning. See "Cleaning the Inside".
Dropouts 	If faded areas, generally rounded, occur randomly on the page: • A single sheet of paper may be defective. Try reprinting the job. • The moisture content of the paper is uneven or the paper has moist spots on its surface. Try a different kind or brand of paper. See "Paper Specifications" on page A.2. • The paper lot is bad. The manufacturing processes can cause some areas to reject toner. Try a different kind or brand of paper. • The toner cartridge may be defective. See Repetitive vertical defects" on page 7.18. • If these steps do not correct the problems, contact a service representative.
Vertical lines 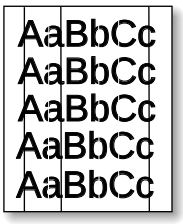	If black vertical streaks appear on the page: • The photosensitive drum inside the toner cartridge has probably been scratched. Install a new toner cartridge. If white vertical streaks appear on the page: • The surface of the LSU part inside the printer may be dirty. Clean the LSU (see page 6.5).

Problem	Solution
Gray background 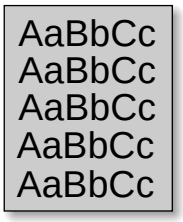 	If the amount of background toner shading becomes unacceptable, the procedures below may help to clear the condition: • Change the paper to a lighter basis weight. See "Paper Specifications" on page A.2. • Check the printer's environment; very dry (low humidity) or high humidity (higher than 80 % RH) conditions can increase the amount of background shading. • Install a new toner cartridge.
Toner smear 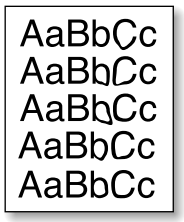 	• Clean the inside of the printer. See "Cleaning the Inside" on page 6.4. • Check the paper type and quality. See "Paper Specifications" on page A.2. • Try installing a new toner cartridge.
Repetitive vertical defects 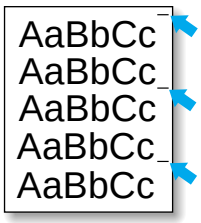 	If marks repeatedly appear on the printed side of the page at even intervals: • The toner cartridge may be damaged. If a repetitive mark occurs every 95 mm or 38 mm on the page, print the cleaning sheet several times to clean the cartridge (see page 6.5). If you still have the same problems, install a new toner cartridge. • Parts in the printer may have toner on them. If the defects occur on the back of the page, the problem will likely correct itself after a few more pages. • The fusing assembly may be damaged. Contact a service representative.

Problem	Solution
Background scatter 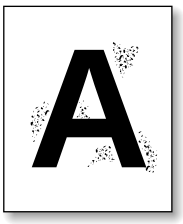	Background scatter results from bits of toner distributed on the printed page. • The paper may be too damp. Try printing with a different batch of paper. Do not open packages of paper until necessary so that the paper does not absorb too much moisture from the air. • If background scatter occurs on an envelope, change your printing layout to avoid printing over areas that have overlapping seams on the reverse side. Printing on seams can cause this problem. • If background scatter covers the entire surface of a printed page, adjust the print resolution through your software application or the printer properties.
Misformed characters 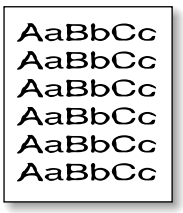	• If characters are improperly formed, producing hollow images, the paper stock may be too slick. Try a different paper. See "Paper Specifications" on page A.2. • If characters are improperly formed, producing a wavy effect, the scanner unit may need service. Check to see if it also occurs on a demo page by pressing the **Demo** button on the control panel when the printer is ready. If you need service, contact a service representative.
Page skew 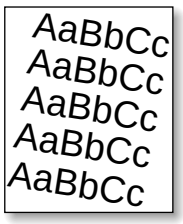	• Check the paper type and quality. See "Paper Specifications" on page A.2. • Make sure that the paper or other media is loaded correctly and the guides are not too tight or too loose against the paper stack.

Problem	Solution
Curl or wave	• Check the paper type and quality. Both high temperature and humidity will cause paper curl. See "Paper Specifications" on page A.2. • Turn over the stack of paper in the paper tray. Also try rotating the paper 180° in the paper tray. • Open the rear output tray and try printing to the face up output tray.
Wrinkles or creases	• Make sure that paper is loaded properly. • Check the paper type and quality. See "Paper Specifications" on page A.2. • Open the rear output tray and try printing to the face up output tray. • Turn over the stack of paper in the paper tray. Also try rotating the paper 180° in the tray.
Back of printouts dirty	• The transfer roller may be dirty. See "Cleaning the Inside" on page 6.4. • Check if the toner is leaking. Clean inside the printer.
Black pages	• The toner cartridge may not be installed properly. Remove the cartridge and reinsert it. • The toner cartridge may be defective and need replacing. Install a new toner cartridge. • The printer may require repairs. Contact a service representative.

Problem	Solution
Loose toner 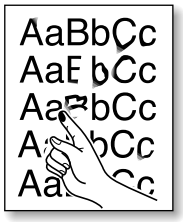	• Clean the inside of the printer. • Check the paper type and quality. See "Paper Specifications" on page A.2. • Try installing a new toner cartridge. • If the problem persists, the printer may require repairs. Contact a service representative.
Character Voids 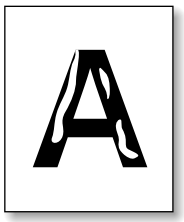	Character voids are white areas within the parts of characters that should be solid black: • If you are using transparencies when you experience this problem, try another type of transparency. (Because of the composition of transparency media, some character voids are normal.) • You may be printing on the wrong surface of the paper. Remove the paper and turn it around. • The paper may not meet paper specifications. See "Paper Specifications" on page A.2.
Horizontal stripes 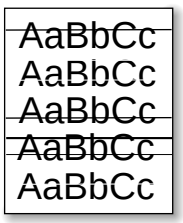	If horizontally aligned black streaks or smears appear: • The toner cartridge may be installed improperly. Remove the cartridge and reinsert it. • The toner cartridge may be defective. Install a new toner cartridge. • If the problem persists, the printer may require repairs. Contact a service representative.

Troubleshooting Error Messages

When the printer detects an error, the control panel indicator lights will indicate error messages. Find the light pattern below that matches the printer light pattern and follow the solutions to clear the error.

Printer Light Patterns

Light status legend

symbol for "light off"

symbol for "light on"

symbol for "light blinking"

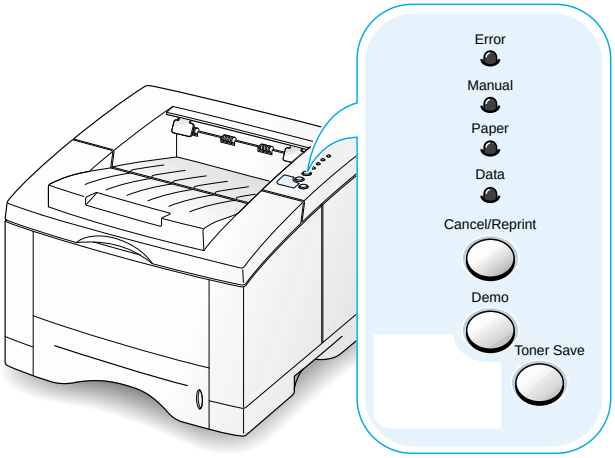

Error
Manual
Paper
Data

Power off

- Check the power cord and the power switch if your printer does not generate a response.
- Make sure that the printer is powered with the specified AC voltage.

Error
Manual
Paper
Data

Paper out

The printer is out of paper in the paper tray. The **Paper** light blinks until paper is added.

- Loading paper into the tray will cancel this message and allow you to continue with the print job.

Error
Manual
Paper
Data

Paper out in the manual feed mode

While printing in the manual feed mode, the printer is out of paper in the Multi-Purpose Tray.

- Load the correct paper into the Multi-Purpose Tray and press the **Demo** button on the control panel to print each page.

Error
Manual
Paper
Data

Paper jam

Paper is jammed inside the printer.

- Clear the paper jam. See "Clearing Paper Jams" on page 7.7.

Error
Manual
Paper
Data

Door open, no toner cartridge, or outputbin full

The printer top cover may be opened or the toner cartridge is not installed.

- Check that the printer top cover door and rear door (face-up output tray) are closed properly.
- Make sure that the toner cartridge is correctly installed in the printer.
- Remove the printed papers, if overstacked, from the top output tray.

Error
Manual
Paper
Data

Memory out (Insufficient Memory)

The printer ran out of memory in the middle of a print job. The page being printed may have been too complex for the memory capacity of the printer. Press the **Cancel/Reprint** button to cancel the current job.

- Turn the printer power off and back on to remove any unnecessary fonts, macros, or any data currently in printer memory.
- Add more printer memory. See "Memory and PostScript DIMMs" on page H.2.
- For a temporary solution, simplify the image or print at a lower resolution.

System error

- Reset the printer by briefly turning the printer off and back on again.
- If the error persists, contact the service representative.

Paper Mismatch

The size of the paper in the input tray is mismatched to the Paper Size setting in printer's properties. Remove the paper from the tray and load the paper of same size as you have set in the properties. Press the **Demo** button to ignore the message and feed paper from the corresponding input tray.

Common Windows Problems

Problem	Possible Cause and Solution
"File in Use" message appears during installation.	Quit all software applications. Remove all software from the StartUp Group, then restart Windows. Reinstall the printer driver.
"Error Writing to LPTx" message appears.	• Make sure that the cables are connected correctly, the printer is on, and the **Data** light on the control panel is on. • If bi-directional communication is not turned on in the driver, it will also cause this message. • From the **Start** menu, select **Settings**, then **Printers**. Right-click on the Samsung ML-1650 series printer icon and select **Properties**. From the **Details** tab, click on **Port Settings**. Remove check from **Check Port State before Printing** box and click **OK**. From **Spool Settings**, select **Print Directly to Printer** and click **OK**. Try printing again.
"General Protection Fault", "Exception OE", "Spool32", or "Illegal Operation" messages appears.	• Close all other applications, reboot Windows, and try printing again. • Delete all temp files from the Temp sub-directory. You can determine the name of the directory by editing the AUTOEXEC.BAT file and locking for the statement, "**Set Temp =**". The name after this statement is the temp directory. It is usually **C:\temp** by default, but can be redefined.

Note: Refer to Microsoft Windows 9x or NT 4.0 documentation that came with your PC for further information on Windows error messages.

Common Macintosh Problems

Problems in the Chooser

Problem	Possible Cause and Solution
The printer driver icon does not appear in the **Chooser**.	Software is not installed correctly. • The LaserWriter driver should be present as a part of the Macintosh OS. Make sure that the LaserWriter driver is in the **Extensions** folder within the **Systems** folder. If not, install the LaserWriter driver component from the Macintosh OS CD. • Make sure that you are using a high-quality cable. • Make sure that the printer is on the correct network. Select **Network** or **AppleTalk Control Panel** from **Control Panels** in the **Apple** menu and then choose the correct network.
The printer name does not appear in the **Select a PostScript Printer** box in the **Chooser**.	• Make sure that the cables are connected correctly, the printer is on, and the **Data** light is on. • Make sure that the correct printer driver has been selected in the **Chooser**. • If the printer resides on a network with multiple zones, make sure that the correct zone is selected in the **AppleTalk Zones** box in the **Chooser**. • Make sure **AppleTalk** is on. (The button next to **Active** is selected in the **Chooser**.) You may need to restart the computer to activate the change.

Printing Errors

Problem	Possible Cause and Solution
You cannot use the computer while the printer is printing.	Background Printing has not been selected. • For LaserWriter 8.3, turn **Background Printing** on in the **Chooser**. Status messages will now be redirected to the **Print Monitor** allowing you to continue working while the computer is processing data to be sent to the printer. • For LaserWriter 8.4 or higher, turn **Background Printing** on at the Print dialog box.

Troubleshooting PS Errors

The following situations are PS language specific and may occur when several printer languages are being used.

Note: To receive a printed or screen displayed message when PS errors occur, open the Print Options dialog box and click the desired selection next to the PostScript errors section.

Problem	Possible Cause	Solution
PostScript file can not be printed.	The PostScript option may not be installed.	• Print a configuration page and verify that the PS version is available for printing.
"This job contains binary data..." message appears.	The pure binary data option is not supported by the PostScript driver.	Open the Properties of the PostScript driver, click on **PostScript**, and click on **Advanced** button. The pure binary data option is not supported. Choose another.
A PS error page prints.	Print job may not be PS.	Make sure that the print job is a PS job. Check to see whether the software application expected a setup or PS header file to be sent to the printer.
The optional Tray 2 is not selected in the driver.	The printer driver has not been configured to recognize the optional Tray 2.	Open the PostScript driver properties and set the Option Tray item of Device option to **Installed**.

Appendix A

Specifications

This appendix provides information on the following topics:

- Printer Specifications
- Paper Specifications

Printer Specifications

Item	Specification and Description
Print Speed	16 PPM (A4), 17 PPM (Letter)
Resolution	1200 dpi
First Printing Time	Less than 14 seconds
WarmUp Time	Less than 40 seconds
Power Rating	AC 100 ~ 127 V (USA, Canada) / 220 ~ 240 V (Others), 50 / 60 Hz
Power Consumption	300 W average during operation / Less than 20 W in power-save mode
Acoustic Noise	Stand by: Less than 35 dB; Operating: Less than 49 dB
Toner Supply	Single cartridge
Toner Cartridge Life	8,000 pages (for starter, 4,000 pages), 5% area coverage
Duty Cycle	Monthly: 40,000 pages maximum
Weight	12.4 Kg / 27.3 lb.
Package Weight	Paper: 1.83 Kg Plastic: 0.33 Kg
External Dimensions	361 (W) x 409 (D) x 294.5 (H) mm (without options)
Operating Environment	Temperature:10 ~ 32 °C / 50 ~ 90 °F; Humidity: 20 ~ 80 % RH
Emulation	PCL6, PostScript Level 3 optional
Random Access Memory (RAM)	Standard 16 MB Expandable to 144 MB : 100 pin, SDRAM, 3.3V; 16 MB, 32 MB, 64 MB, or 128 MB available
Fonts	1 bitmap, 45 scalable (Type 1 136 PS fonts)
Interface Switching	Automatic (Parallel, USB, Network)
Interface	• 16PPM (A4) Bidirectional Parallel Standard - Modes supported: Compatible, Nibble, Byte, ECP • USB Interface Standard - USB 1.1 compliant - 12Mbps 1 port • Network Optional - Ethernet 10/100M Base T - Novell - TCP/IP and AppleTalk - LPD

A