SAMSUNG

SAMSUNG LASER PRINTER User's Guide

ML-2570 series

For UK customers:
To reorder your consumables
Call 0800 3164060
For Technical Assistance
Call 0870 2420303

This manual is provided for information purposes only. All information included herein is subject to change without notice. Samsung Electronics is not responsible for any direct or indirect damages, arising from or related to the use of this manual.

© 2006 Samsung Electronics Co., Ltd. All rights reserved.

- ML-2510, ML-2570, and ML-2571N are model names of Samsung Electronics Co., Ltd.
- Samsung and Samsung logo are trademarks of Samsung Electronics Co., Ltd.
- Centronics is a trademark of Centronics Data Computer Corporation.
- IBM and IBM PC are trademarks of International Business Machines Corporation.
- PCL and PCL 6 are trademarks of Hewlett-Packard company.
- Microsoft, Windows, Windows 98, Windows Me, Windows 2000, Windows NT 4.0, Windows XP, and Windows 2003 are registered trademarks of Microsoft Corporation.
- PostScript 3 is a trademark of Adobe System, Inc.
- UFST® and MicroType™ are registered trademarks of Monotype Imaging Inc.
- TrueType, LaserWriter, and Macintosh are trademarks of Apple Computer, Inc.
- All other brand or product names are trademarks of their respective companies or organizations.

Contact SAMSUNG WORLD WIDE

If you have any comments or questions regarding Samsung products, contact the SAMSUNG customer care center.

Country	Customer Care Center	Web Site
CANADA	1-800-SAMSUNG (7267864)	www.samsung.com/ca
MEXICO	01-800-SAMSUNG (7267864)	www.samsung.com/mx
U.S.A	1-800-SAMSUNG (7267864)	www.samsung.com
ARGENTINE	0800-333-3733	www.samsung.com/ar
BRAZIL	0800-124-421	www.samsung.com/br
CHILE	800-726-7864 (SAMSUNG)	www.samsung.com/cl
COSTA RICA	0-800-507-7267	www.samsung.com/latin
ECUADOR	1-800-10-7267	www.samsung.com/latin
EL SALVADOR	800-6225	www.samsung.com/latin
GUATEMALA	1-800-299-0013	www.samsung.com/latin
JAMAICA	1-800-234-7267	www.samsung.com/latin
PANAMA	800-7267	www.samsung.com/latin
PUERTO RICO	1-800-682-3180	www.samsung.com/latin
REP. DOMINICA	1-800-751-2676	www.samsung.com/latin
TRINIDAD & TOBAGO	1-800-7267-864	www.samsung.com/latin
VENEZUELA	1-800-100-5303	www.samsung.com/latin
BELGIUM	02 201 2418	www.samsung.com/be
CZECH REPUBLIC	844 000 844	www.samsung.com/cz
DENMARK	38 322 887	www.samsung.com/dk
FINLAND	09 693 79 554	www.samsung.com/fi
FRANCE	08 25 08 65 65 (€ 0,15/min)	www.samsung.com/fr
GERMANY	01805 - 121213 (€ 0,12/min)	www.samsung.de
HUNGARY	06 40 985 985	www.samsung.com/hu

Country	Customer Care Center	Web Site
ITALIA	199 153 153	www.samsung.com/it
LUXEMBURG	02 261 03 710	www.samsung.lu
NETHERLANDS	0900 20 200 88 (€ 0,10/min)	www.samsung.com/nl
NORWAY	231 627 22	www.samsung.com/no
POLAND	0 801 801 881	www.samsung.com/pl
PORTUGAL	80 8 200 128	www.samsung.com/pt
SLOVAKIA	0850 123 989	www.samsung.com/sk
SPAIN	902 10 11 30	www.samsung.com/es
SWEDEN	08 585 367 87	www.samsung.com/se
U.K	0870 242 0303	www.samsung.com/uk
RUSSIA	8-800-200-0400	www.samsung.ru
UKRAINE	8-800-502-0000	www.samsung.com/ur
AUSTRALIA	1300 362 603	www.samsung.com/au
CHINA	800-810-5858 010- 6475 1880	www.samsung.com.cn
HONG KONG	2862 6001	www.samsung.com/hk
INDIA	3030 8282 1600 1100 11	www.samsung.com/in
INDONESIA	0800-112-8888	www.samsung.com/id
JAPAN	0120-327-527	www.samsung.com/jp
MALAYSIA	1800-88-9999	www.samsung.com/my
PHILIPPINES	1800-10-SAMSUNG (7267864)	www.samsung.com/ph
SINGAPORE	1800-SAMSUNG (7267864)	www.samsung.com/sg
THAILAND	1800-29-3232 02-689-3232	www.samsung.com/th
TAIWAN	0800-329-999	www.samsung.com/tw
VIETNAM	1 800 588 889	www.samsung.com/vn
SOUTH AFRICA	0860 7267864 (SAMSUNG)	www.samsung.com/za
U.A.E	800SAMSUNG (7267864)	www.samsung.com/mea

CONTENTS

1. Introduction

Special features 1.1
Printer overview 1.2
Control panel overview 1.3
Finding more information 1.3
Selecting a location 1.4

2. Basic setup

Printing a demo page 2.1
Using toner save mode 2.1

3. Software overview

Supplied software 3.1
Printer driver features 3.2
System requirements 3.2

4. Network setup

Introduction 4.1
Supported operating systems 4.1
Installing an external wired network interface server 4.2

5. Loading print media

Selecting print media 5.1
Loading paper 5.4
Knowing an output location 5.6

6. Basic printing

Printing a document 6.1
Canceling a print job 6.1

7. Ordering supplies and accessories

Toner cartridge 7.1
Accessory 7.1
How to purchase 7.1

8. Maintenance

Cleaning the printer 8.1
Maintaining the toner cartridge 8.3
Printing a configuration page 8.5
Maintenance parts 8.5

9. Troubleshooting

Clearing paper jams 9.1
Troubleshooting checklist 9.4
Understanding the LEDs 9.4

Solving general printing problems 9.5
Solving print quality problems 9.7
Common Windows problems 9.9
Common PostScript problems 9.9
Common Linux problems 9.10
Common Macintosh problems 9.11

10. Specifications

Printer specifications 10.1

Important Precautions and Safety Information

When using this machine, these basic safety precautions should always be followed to reduce risk of fire, electric shock, and injury to people:

1 Read and understand all instructions.

2 Use common sense whenever operating electrical appliances.

3 Follow all warnings and instructions marked on the machine and in the literature accompanying the machine.

4 If an operating instruction appears to conflict with safety information, heed the safety information. You may have misunderstood the operating instruction. If you cannot resolve the conflict, contact your sales or service representative for assistance.

5 Unplug the machine from the AC wall socket before cleaning. Do not use liquid or aerosol cleaners. Use only a damp cloth for cleaning.

6 Do not place the machine on an unstable cart, stand or table. It may fall, causing serious damage.

7 Your machine should never be placed on, near or over a radiator, heater, air conditioner or ventilation duct.

8 Do not allow anything to rest on the power cable. Do not locate your machine where the cords will be abused by persons walking on them.

9 Do not overload wall outlets and extension cords. This can diminish performance, and may result in the risk of fire or electric shock.

10 Do not allow pets to chew on the AC power or PC interface cords.

11 Never push objects of any kind into the machine through case or cabinet openings. They may touch dangerous voltage points, creating a risk of fire or shock. Never spill liquid of any kind onto or into the machine.

12 To reduce the risk of electric shock, do not disassemble the machine. Take it to a qualified service technician when repair work is required. Opening or removing covers may expose you to dangerous voltages or other risks. Incorrect reassembly could cause electric shock when the unit is subsequently used.

13 Unplug the machine from the PC and AC wall outlet, and refer servicing to qualified service personnel under the following conditions:
- When any part of the power cord, plug, or connecting cable is damaged or frayed.
- If liquid has been spilled into the machine.
- If the machine has been exposed to rain or water.
- If the machine does not operate properly after instructions have been followed.
- If the machine has been dropped, or the cabinet appears damaged.
- If the machine exhibits a sudden and distinct change in performance.

14 Adjust only those controls covered by the operating instructions. Improper adjustment of other controls may result in damage, and may require extensive work by a qualified service technician to restore the machine to normal operation.

15 Avoid using this machine during a lightning storm. There may be a remote risk of electric shock from lightning. If possible, unplug the AC power for the duration of the lightning storm.

16 If you continuously print multiple pages, the surface of the output tray may become hot. Be careful not to touch the surface, and keep children away from the surface.

17 SAVE THESE INSTRUCTIONS.

Environmental and Safety Consideration

Laser Safety Statement

The printer is certified in the U.S. to conform to the requirements of DHHS 21 CFR, chapter 1 Subchapter J for Class I(1) laser products, and elsewhere, is certified as a Class I laser product conforming to the requirements of IEC 825.

Class I laser products are not considered to be hazardous. The laser system and printer are designed so there is never any human access to laser radiation above a Class I level during normal operation, user maintenance, or prescribed service condition.

Warning

Never operate or service the printer with the protective cover removed from Laser/Scanner assembly. The reflected beam, although invisible, can damage your eyes. When using this product, these basic safety precautions should always be followed to reduce risk of fire, electric shock, and injury to persons:

CAUTION - CLASS 3B LASER RADIATION WHEN OPEN AVOID EXPOSURE TO THE BEAM.

DANGER - LASER RADIATION AVOID DIRECT EXPOSURE TO BEAM.

DANGER - RADIATIONS INVISIBLES DU LASER EN CAS D'OUVERTURE. EVITER TOUTE EXPOSITION DIRECTE AU FAISCEAU.

VORSICHT - UNSICHTBARE LASERSTRAHLUNG, WENN ABDECKUNG GEÖFFNET. NICHT DEM STRAHL AUSSETZEN.

ATTENZIONE - RADIAZIONE LASER INVISIBILE IN CASO DI APERTURA. EVITARE L'ESPOSIZIONE AL FASCIO.

PRECAUCIÓN - RADIACIÓN LASER INVISIBLE CUANDO SE ABRE. EVITAR EXPONERSE AL RAYO.

PERIGO - RADIAÇÃO LASER INVISÍVEL AO ABRIR. EVITE EXPOSIÇÃO DIRECTA AO FEIXE.

GEVAAR - ONZICHTBARE LASERSTRALEN BIJ GEOPENDE KLEP. DEZE KLEP NIET OPENEN.

ADVARSEL - USYNLIG LASERSTRÅLNING VED ÅBNING. UNDGÅ UDSAETTELSE FOR STRÅLNING.

ADVARSEL. - USYNLIG LASERSTRÅLNING NÅR DEKSEL ÅPNES. UNNGÅ EKSPONERING FOR STRÅLEN.

VARNING - OSYNLIG LASERSTRÅLNING NÄR DENNA DEL ÄR ÖPPEN. STRÅLEN ÄR FARLIG.

VAROITUS - NÄKYMÄTÖNTÄ LASERSÄTEILYÄ AVATTAESSA. VARO SUORAA ALTISTUMISTA SÄTEELLE.

注 意 - 严禁揭开此盖, 以免激光泄露灼伤

주 의 - 이 덮개를 열면 레이저광에 노출될 수 있으므로 주의하십시오.

Ozone Safety

During normal operation, this machine produces ozone. The ozone produced does not present a hazard to the operator. However, it is advisable that the machine be operated in a well ventilated area.

If you need additional information about ozone, please contact your nearest Samsung dealer.

Power Saver

This printer contains advanced energy conservation technology that reduces power consumption when it is not in active use.

When the printer does not receive data for an extended period of time, power consumption is automatically lowered.

Recycling

Please recycle or dispose of packaging materials for this product in an environmentally responsible manner.

Correct Disposal of This Product (Waste Electrical & Electronic Equipment)

(Applicable in the European Union and other European countries with separate collection systems)

This marking shown on the product or its literature, indicates that it should not be disposed with other household wastes at the end of its working life. To prevent possible harm to the environment or human health from uncontrolled waste disposal, please separate this from other types of wastes and recycle it responsibly to promote the sustainable reuse of material resources.

Household users should contact either the retailer where they purchased this product, or their local government office, for details of where and how they can take this item for environmentally safe recycling.

Business users should contact their supplier and check the terms and conditions of the purchase contract. This product should not be mixed with other commercial wastes for disposal.

Radio Frequency Emissions

FCC Regulations

This device complies with Part 15 of the FCC Rules. Operation is subject to the following two conditions:

- This device may not cause harmful interference, and
- This device must accept any interference received, including interference that may cause undesired operation.

This device has been tested and found to comply with the limits for a Class B digital device, pursuant to Part 15 of the FCC rules. These limits are designed to provide reasonable protection against harmful interference in a residential installation. This equipment generates, uses and can radiate radio frequency energy and, if not installed and used in accordance with the instructions, may cause harmful interference to radio communications. However, there is no guarantee that interference will not occur in a particular installation. If this equipment does cause harmful interference to radio or television reception, which can be determined by turning the equipment off and on, the user is encouraged to try to correct the interference by one or more of the following measures:

- Reorient or relocate the receiving antenna.
- Increase the separation between the equipment and receiver.
- Connect the equipment into an outlet on a circuit different from that to which the receiver is connected.
- Consult the dealer or an experienced radio/TV technician for help.

CAUTION: Changes or modifications not expressly approved by the manufacturer responsible for compliance could void the user's authority to operate the equipment.

Canadian Radio Interference Regulations

This digital apparatus does not exceed the Class B limits for radio noise emissions from digital apparatus as set out in the interference-causing equipment standard entitled "Digital Apparatus", ICES-003 of the Industry and Science Canada.

Cet appareil numérique respecte les limites de bruits radioélectriques applicables aux appareils numériques de Classe B prescrites dans la norme sur le matériel brouilleur: "Appareils Numériques", ICES-003 édictée par l'Industrie et Sciences Canada.

United States of America

Federal Communications Commission (FCC)

Intentional emitter per FCC Part 15

Low power, Radio LAN type devices (radio frequency (RF) wireless communication devices), operating in the 2.4 GHz/5 GHz Band, may be present (embedded) in your printer system. This section is only applicable if these devices are present. Refer to the system label to verify the presence of wireless devices.

Wireless devices that may be in your system are only qualified for use in the United States of America if an FCC ID number is on the system label.

The FCC has set a general guideline of 20 cm (8 inches) separation between the device and the body, for use of a wireless device near the body (this does not include extremities). This device should be used more than 20 cm (8 inches) from the body when wireless devices are on. The power output of the wireless device (or devices), which may be embedded in your printer, is well below the RF exposure limits as set by the FCC.

This transmitter must not be collocated or operation in conjunction with any other antenna or transmitter.

Operation of this device is subject to the following two conditions:(1) This device may not cause harmful interference, and(2) this device must accept any interference received, including interference that may cause undesired operation of the device.

Wireless devices are not user serviceable. Do not modify them in any way. Modification to a wireless device will void the authorization to use it. Contact manufacturer for service.

FCC Statement for Wireless LAN use:

"While installing and operating this transmitter and antenna combination the radio frequency exposure limit of 1mW/cm2 may be exceeded at distances close to the antenna installed. Therefore, the user must maintain a minimum distance of 20cm from the antenna at all times. This device can not be colocated with another transmitter and transmitting antenna."

Declaration of Conformity (European Countries)

Approvals and Certifications

The CE marking applied to this product symbolises Samsung Electronics Co., Ltd. Declaration of Conformity with the following applicable 93/68/EEC Directives of the European Union as of the dates indicated:

January 1, 1995: Council Directive 73/23/EEC Approximation of the laws of the member states related to low voltage equipment.

January 1, 1996: Council Directive 89/336/EEC (92/31/EEC), approximation of the laws of the Member States related to electromagnetic compatibility.

March 9, 1999: Council Directive 1999/5/EC on radio equipment and telecommunications terminal equipment and the mutual recognition of their conformity.

A full declaration, defining the relevant Directives and referenced standards can be obtained from your Samsung Electronics Co., Ltd. representative.

EC Certification

Certification to 1999/5/EC Radio Equipment & Telecommunications Terminal Equipment Directive (FAX)

This Samsung product has been self-certified by Samsung for pan-European single terminal connection to the analogue public switched telephone network (PSTN) in accordance with Directive 1999/5/EC. The product has been designed to work with the national PSTNs and compatible PBXs of the European countries:

In the event of problems, you should contact the Euro QA Lab of Samsung Electronics Co., Ltd. in the first instance.

The product has been tested against TBR21 and/or TBR 38. To assist in the use and application of terminal equipment which complies with this standard, the European Telecommunication Standards Institute (ETSI) has issued an advisory document (EG 201 121) which contains notes and additional requirements to ensure network compatibility of TBR21 terminals. The product has been designed against, and is fully compliant with, all of the relevant advisory notes contained in this document.

European Radio Approval Information (for products fitted with EU-approved radio devices)

This Product is a printer; low power, Radio LAN type devices (radio frequency (RF) wireless communication devices), operating in the 2.4 GHz/5 GHz band, may be present (embedded) in your printer system which is intended for home or office use. This section is only applicable if these devices are present. Refer to the system label to verify the presence of wireless devices.

Wireless devices that may be in your system are only qualified for use in the European Union or associated areas if a CE mark with CE a Notified Body Registration Number and the Alert Symbol is on the system label.

The power output of the wireless device or devices that may be embedded in you printer is well below the RF exposure limits as set by the European Commission through the R&TTE directive.

European States qualified under wireless approvals:

EU	Austria, Belgium, Cyprus, Czech Republic, Denmark, Estonia, Finland, France (with frequency restrictions), Germany, Greece, Hungary, Ireland, Italy, Latvia, Lithuania, Luxembourg, Malta, The Netherlands, Poland, Portugal, Slovakia, Slovenia, Spain, Sweden and the U.K.
EEA/EFTA countries	Iceland, Liechtenstein, Norway and Switzerland

European States with restrictions on use:

EU	In France, the frequency range is restricted to 2446.5-2483.5 MHz for devices above 10 mW transmitting power such as wireless
EEA/EFTA countries	No limitations at this time.

Regulatory Compliance Statements

Wireless Guidance

Low power, Radio LAN type devices (radio frequency (RF) wireless communication devices), operating in the 2.4 GHz/5 GHz Band, may be present (embedded) in your printer system. The following section is a general overview of considerations while operating a wireless device.

Additional limitations, cautions, and concerns for specific countries are listed in the specific country sections (or country group sections). The wireless devices in your system are only qualified for use in the countries identified by the Radio Approval Marks on the system rating label. If the country you will be using the wireless device in, is not listed, please contact your local Radio Approval agency for requirements. Wireless devices are closely regulated and use may not be allowed.

The power output of the wireless device or devices that may be embedded in your printer is well below the RF exposure limits as known at this time. Because the wireless devices (which may be embedded into your printer) emit less energy than is allowed in radio frequency safety standards and recommendations, manufacturer believes these devices are safe for use. Regardless of the power levels, care should be taken to minimize human contact during normal operation.

As a general guideline, a separation of 20 cm (8 inches) between the wireless device and the body, for use of a wireless device near the body (this does not include extremities) is typical. This device should be used more than 20 cm (8 inches) from the body when wireless devices are on and transmitting.

This transmitter must not be collocated or operation in conjunction with any other antenna or transmitter.

Some circumstances require restrictions on wireless devices. Examples of common restrictions are listed below:

Radio frequency wireless communication can interfere with equipment on commercial aircraft. Current aviation regulations require wireless devices to be turned off while traveling in an airplane. IEEE 802.11 (also known as wireless Ethernet) and Bluetooth communication devices are examples of devices that provide wireless communication.

In environments where the risk of interference to other devices or services is harmful or perceived as harmful, the option to use a wireless device may be restricted or eliminated. Airports, Hospitals, and Oxygen or flammable gas laden atmospheres are limited examples where use of wireless devices may be restricted or eliminated. When in environments where you are uncertain of the sanction to use wireless devices, ask the applicable authority for authorization prior to use or turning on the wireless device.

Every country has different restrictions on the use of wireless devices. Since your system is equipped with a wireless device, when traveling between countries with your system, check with the local Radio Approval authorities prior to any move or trip for any restrictions on the use of a wireless device in the destination country.

If your system came equipped with an internal embedded wireless device, do not operate the wireless device unless all covers and shields are in place and the system is fully assembled.

Wireless devices are not user serviceable. Do not modify them in any way. Modification to a wireless device will void the authorization to use it. Please contact manufacturer for service.

Only use drivers approved for the country in which the device will be used. See the manufacturer System Restoration Kit, or contact manufacturer Technical Support for additional information.

Replacing the Fitted Plug (for UK Only)

IMPORTANT

The mains lead for this machine is fitted with a standard (BS 1363) 13 amp plug and has a 13 amp fuse. When you change or examine the fuse, you must re-fit the correct 13 amp fuse. You then need to replace the fuse cover. If you have lost the fuse cover, do not use the plug until you have another fuse cover.

Please contact the people from you purchased the machine.

The 13 amp plug is the most widely used type in the UK and should be suitable. However, some buildings (mainly old ones) do not have normal 13 amp plug sockets. You need to buy a suitable plug adaptor. Do not remove the moulded plug.

WARNING

If you cut off the moulded plug, get rid of it straight away.

You cannot rewire the plug and you may receive an electric shock if you plug it into a socket.

IMPORTANT WARNING: You must earth this machine.

The wires in the mains lead have the following color code:

- Green and Yellow: Earth
- Blue: Neutral
- Brown: Live

If the wires in the mains lead do not match the colors marked in your plug, do the following:

You must connect the green and yellow wire to the pin marked by the letter “E” or by the safety ‘Earth symbol’ or colored green and yellow or green.

You must connect the blue wire to the pin which is marked with the letter “N” or colored black.

You must connect the brown wire to the pin which is marked with the letter “L” or colored red.

You must have a 13 amp fuse in the plug, adaptor, or at the distribution board.

1 Introduction

Congratulations on the purchase of your printer!

This chapter includes:

- **Special features**
- **Printer overview**
- **Control panel overview**
- **Finding more information**
- **Selecting a location**

Special features

Your new printer is equipped with several special features that improve the print quality. You can:

Print with excellent quality and high speed

- You can print up to **1200 x 1200 dpi** effective output (ML-2570, ML-2571N) or **1200 x 600 dpi** effective output (ML-2510). See the **Software Section**.
- Your printer prints A4-sized paper at up to 24 ppm[a] and letter-sized paper at up to 25 ppm.

Handle paper flexibly

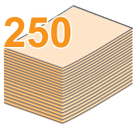

- Manual tray supports one sheet of envelopes, labels, transparencies, custom-sized materials, postcards and heavy paper.
- Standard 250-sheet tray supports plain paper.
- 100-sheet output tray supports convenient access.

Create professional documents

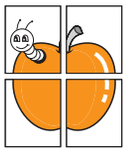

- Print **Watermarks**. You can customize your documents with words, such as “Confidential.” See the **Software Section**.
- Print **Posters**. The text and pictures of each page of your document are magnified and printed across the sheet of paper and can then be taped together to form a poster. See the **Software Section**.

Save time and money

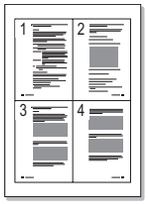

- Your printer allows you to use toner save mode to save toner. See the **Software Section**.
- You can print on both sides of the paper manually to save paper **[Double-side Printing (Manual)]**.
- You can print multiple pages on a single sheet of paper to save paper (**N-Up printing**). See the **Software Section**.
- You can use preprinted forms and letterhead with plain paper. See the **Software Section**.
- Your printer automatically **conserves electricity** by substantially reducing power consumption when not in use.

Expand the printer capacity

- A **Network interface** enables network printing. You can buy and add an external wired network interface server to the ML-2510 and ML-2570. The ML-2571N comes with a built-in network interface, 10/100 Base TX.

a. pages per minute

Print in various environments

- A PostScript 3 Emulation* (PS) enables PS printing in the ML-2570 and ML-2571N.

* Zoran IPS Emulation compatible with PostScript 3

- © Copyright 1995-2005, Zoran Corporation. All rights reserved. Zoran, the Zoran logo, IPS/PS3 and OneImage are trademarks of Zoran Corporation.

* 136 PS3 fonts

- Contains UFST and MicroType from Monotype Imaging Inc.

- You can print in **Windows 98/Me/NT 4.0/2000/XP/2003**.
- Your printer is compatible with **Linux** and **Macintosh**.
- Your printer comes with both **Parallel** and **USB** interfaces.
- You can also use a **Network interface**. The ML-2571N comes with a built-in network interface, 10/100 Base TX. However, you need to buy and install the external wired network interface server to the ML-2510 and ML-2570.

Printer features

The table below lists a general overview of features supported by your printer.
(I: Installed, O: Option, NA: Not Available)

Features	ML-2510	ML-2570	ML-2571N
IEEE 1284 Parallel	I	I	I
USB 2.0	I (USB 1.1)	I	I
Network Interface (Ethernet 10/100 Base TX)	O (External)	O (External)	I
PCL Emulation	NA	I	I
PostScript Emulation	NA	I	I

Printer overview

Front view

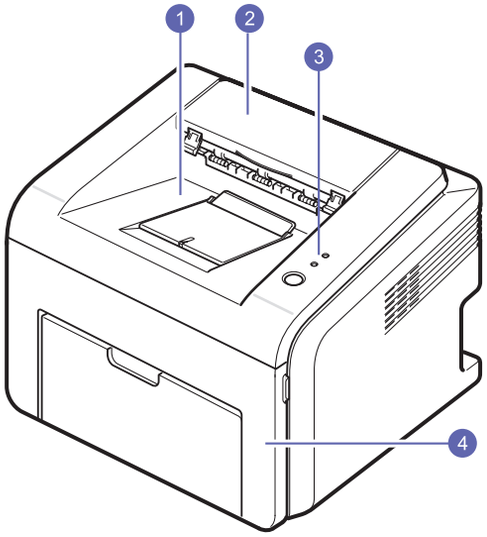

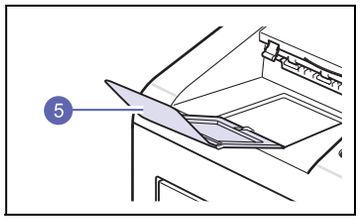

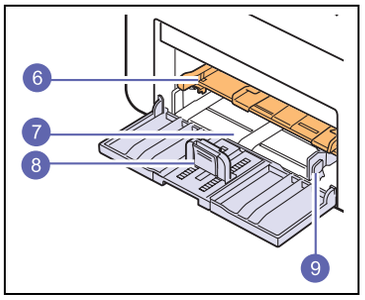

* The figure above shows an ML-2571N.

1	**output tray**	**6**	**manual tray**
2	**top cover**	**7**	**standard tray**
3	**control panel**	**8**	**paper length guide**
4	**front cover**	**9**	**paper width guide**
5	**output tray extension**		

Rear view

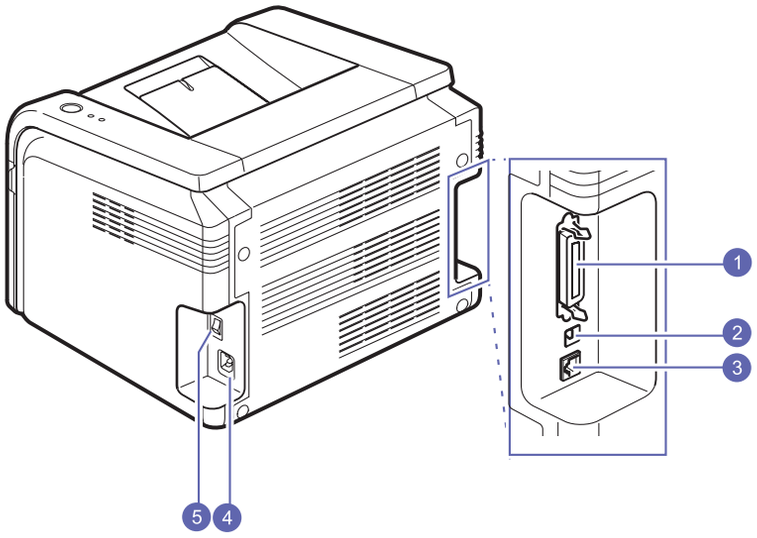

* The figure above shows an ML-2571N.

1	**parallel port**	4	**power receptacle**
2	**USB port**	5	**power switch**
3	**network port**		

Control panel overview

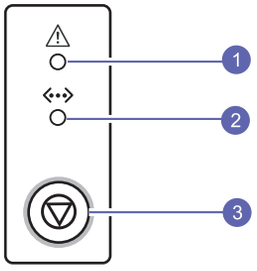

1	**Error**: Indicates the status of your printer. See page 9.4.
2	**Online**: Indicates the status of your printer. See page 9.4.
3	**Cancel**: Prints a demo page or configuration page. Cancels the print job. Makes the printer pick up the print media.

Finding more information

You can find information for setting up and using your printer from the following resources, either printed or onscreen.

Quick Install Guide 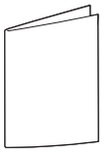	Provides information on setting up your printer, therefore, be sure to follow the instructions in the guide to get the printer ready.
Online User's Guide 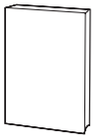	Provides you with step-by-step instructions for using your printer's full features, and contains information for maintaining your printer, troubleshooting, and installing accessories. This user's guide also contains a **Software Section** providing you with information on how to print documents with your printer on various operating systems, and how to use the supplied software utilities. **Note** • You can access the user's guides in other languages from the **Manual** folder on the printer driver CD.
Network Printer User's Guide 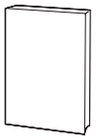	Contained on the network utilities CD, provides you with information on setting up and connecting your printer to a network.
Printer Driver Help 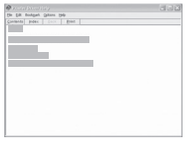	Provides you with help information on printer driver properties and instructions for setting up the properties for printing. To access a printer driver help screen, click **Help** from the printer properties dialog box.
Samsung Website	If you have Internet access, you can get help, support, printer drivers, manuals, and order information from the Samsung website, www.samsungprinter.com.

Selecting a location

Select a level, stable place with adequate space for air circulation. Allow extra space for opening covers and trays.

The area should be well-ventilated and away from direct sunlight or sources of heat, cold, and humidity. Do not set the printer close to the edge of your desk or table.

Clearance space

Front: 482.6 mm (enough space so that tray can be opened)

Back: 100 mm (enough space for ventilation)

Right: 100 mm (enough space for ventilation)

Left: 100 mm (enough space for ventilation)

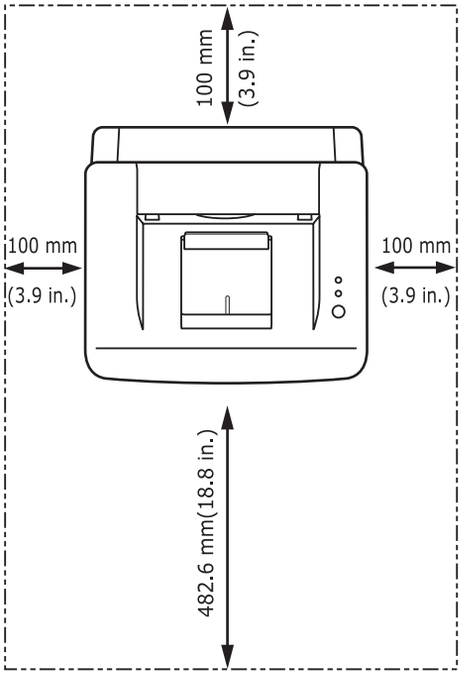

2 Basic setup

This chapter includes:

- **Printing a demo page**
- **Using toner save mode**

Printing a demo page

After setting up your printer, print a demo page to make sure that the printer is operating correctly.

Press and hold the **Cancel** button for about 2 seconds.

A demo page prints out.

Using toner save mode

Toner save mode allows the printer to use less toner on each page. Activating this mode extends the life of your toner cartridge and reduces your cost per page beyond what one would experience in the normal mode, but it reduces print quality. This setting is not available with the **1200dpi (Best)** setting.

You can set the toner save mode from the printer properties window on your printer driver. See the **Software Section**.

3 Software overview

This chapter gives you an overview of the software that comes with your printer. Further details about installing and using the software are explained in the **Software Section**.

This chapter includes:

- **Supplied software**
- **Printer driver features**
- **System requirements**

Supplied software

You must install the printer software using the supplied CDs after you have set up your printer and connected it to your computer.

Each CD provides you with the following software:

CD	Contents	
printer software CD	Windows	• **Printer driver**: Use this driver to take full advantage of your printer's features. • **Smart Panel**: This program allows you to monitor the printer's status and alerts you when an error occurs during printing. • **Printer Settings Utility**: This program is automatically installed when you install the Smart Panel. • **PCL6 driver**: Use this driver to print documents in the PCL6, PCL5e language. (ML-2570, ML-2571N only) • **Postscript Printer Description (PPD) file**: Use the PostScript driver to print documents with complex fonts and graphics in the PostScript language. (ML-2570, ML-2571N only) • **User's Guide** in PDF
	Linux	• **Printer driver**: Use this driver to run your printer from a Linux computer and print documents. • **Smart Panel**: This program allows you to monitor the printer's status and alerts you when an error occurs during printing.
	Macintosh	• **Postscript Printer Description (PPD) file**: Use this file to run your printer from a Macintosh computer and print documents. (ML-2570, ML-2571N only) • **Smart Panel**: This program allows you to monitor the printer's status and alerts you when an error occurs during printing.
network utilities CD (ML-2571N only)	Windows	• **SyncThru™ Web Admin Service**: Use this web-based program to remotely manage, monitor, and troubleshoot network printers. • **Set IP**: Use this program to set your printer's TCP/IP addresses. • **Network Printer User's Guide** in PDF

Printer driver features

Your printer drivers support the following standard features:

- Paper source selection
- Paper size, orientation and type
- Number of copies

In addition, you can use various special printing features. The following table shows a general overview of features supported by your printer drivers:

Feature	SPL (Samsung Printer Language)		PCL 6	PostScript	
	Windows	Linux	Windows	Windows	Macintosh
Toner save	O	O	O	O	X
Print quality option	O	O	O	O	O
Poster printing	O	X	O	X	X
Multiple pages per sheet (N-up)	O	O (2, 4)	O	O	O
Fit to page printing	O	O	O	O	O
Scale printing	O	O	O	O	O
Watermark	O	X	O	X	X
Overlay	O	X	O	X	X

Note

- Overlay is not supported in Windows NT 4.0.

System requirements

Before you begin, ensure that your system meets the following requirements:

Windows

Item	Requirements		Recommended
Operating system	Windows 98/Me/NT 4.0/2000/XP/2003		
CPU	Windows 98/ Me/NT 4.0/2000	Pentium II 400 MHz or higher	Pentium III 933 MHz
	Windows XP/ 2003	Pentium III 933 MHz or higher	Pentium IV 1 GHz
RAM	Windows 98/ Me/NT 4.0/2000	64 MB or more	128 MB
	Windows XP/ 2003	128 MB or more	256 MB
Free disk space	Windows 98/ Me/NT 4.0/2000	300 MB or more	1 GB
	Windows XP/ 2003	1 GB or more	5 GB
Internet Explorer	5.0 or higher		

Note

- For Windows NT 4.0/2000/XP/2003, users who have an administrator right can install the software.

Linux

Item	Requirements
Operating system	Various Linux OS including • Red Hat 8 ~ 9 • Fedora Core 1 ~ 3 • Mandrake 9.2 ~ 10.1 • SuSE 8.2 ~ 9.2
Processor	Pentium IV 1 GHz or higher
RAM	256 MB or higher
Free disk page	1 GB or higher
Software	• Linux Kernel 2.4 or higher • Glibc 2.2 or higher • CUPS • SANE

Macintosh

Item	Requirements
Operating system	Macintosh 10.3 (ML-2510), 8.6 ~ 9.2 and 10.1 ~ 10.4 (ML-2570, ML-2571N)
RAM	128 MB
Free disk space	200 MB
Connection	USB interface, Network interface

4 Network setup

This chapter gives you basic information for setting up your printer for network connections.

This chapter includes:

- **Introduction**
- **Supported operating systems**
- **Installing an external wired network interface server**

Introduction

Once you have connected your printer to a network with an RJ-45 Ethernet cable, you can share the printer with other network users.

You need to set up the network protocols on the printer to use it as your network printer. Protocols can be set up by the following programs that came with your printer:

- **SyncThru™ Web Admin Service**: A web-based printer management solution for network administrators. **SyncThru™ Web Admin Service** provides you with an efficient way of managing network devices and lets you remotely monitor and troubleshoot network printers from any site with corporate intranet access.
- **SyncThru™ Web Service**: A web server embedded to your network print server, which allows you to configure the network parameters necessary for the printer to connect to various network environments.
- **SetIP**: A utility program allowing you to select a network interface and manually configure the addresses for use with the TCP/IP protocol.

For further details, refer to the user's guide on the network utilities CD that came with your printer.

Supported operating systems

The following table shows the network environments supported by the printer:

Item	Requirements
Network interface	• 10/100 Base-TX
Network operating system	• Windows 98/Me/NT 4.x/2000/XP/2003 • Linux OS including Red Hat 8 ~ 9, Fedora Core 1 ~ 3, Mandrake 9.2 ~ 10.1, SuSE 8.2 ~ 9.2 • Mac OS 8.6 ~ 9.2, 10.1 ~ 10.4 • Unix HP-UX, Solaris, SunOS, SCO UNIX • NetWare 4.x, 5.x, 6.x
Network protocols	• TCP/IP • EtherTalk • HTTP 1.1 • SNMPv2 • SPX/IPX
Dynamic addressing server	• DHCP, BOOTP

• TCP/IP: Transmission Control Protocol/Internet Protocol
• SPX/IPX: Sequenced Packet eXchange/Internet Packet eXchange
• DHCP: Dynamic Host Configuration Protocol
• BOOTP: Bootstrap Protocol

Installing an external wired network interface server

The ML-2571N is equipped with wired network interface, allowing you to use your printer on a network.

To use the ML-2510 and ML-2570 in network environments, you need to buy an optional external wired network interface server. For order information, see page 7.1.

5 Loading print media

This chapter will help you understand the types of paper you can use with your printer and how to properly load paper in the different paper trays for the best print quality.

This chapter includes:

- **Selecting print media**
- **Loading paper**
- **Knowing an output location**

Selecting print media

You can print on a variety of print media, such as plain paper, envelopes, labels, and transparencies. Always use print media that meet the guidelines for use with your printer. Print media that does not meet the guidelines outlined in this user's guide may cause the following problems:

- Poor print quality
- Increased paper jams
- Premature wear on the printer

Properties, such as weight, composition, grain, and moisture content, are important factors that affect the printer's performance and the output quality. When you choose print media, consider the following:

- Desired outcome: The print media you choose should be appropriate for your project.
- Size: You can use any size print media that fits easily within the paper adjusters of the paper tray.
- Weight: Your printer supports print media weights as follows:
  - 16 to 43 lb (60 to 163 g/m^2) for the standard tray and manual tray
  - 20 to 24 lb (75 to 90 g/m^2) for the manual duplex printing
- Brightness: Some print media are whiter than others and produce sharper, more vibrant images.
- Surface smoothness: The smoothness of the print media affects how crisp the printing looks on the paper.

Notes

- Some print media may meet all of the guidelines in this section and still not produce satisfactory results. This may be the result of improper handling, unacceptable temperature and humidity levels, or other variables over which Samsung has no control.
- Before purchasing large quantities of print media, ensure that it meets the requirements specified in this user's guide.

Caution

- Using print media that does not meet these specifications may cause problems, requiring repairs. Such repairs are not covered by Samsung's warranty or service agreements.

Supported sizes of paper

Type	Size	Dimensions	Weight	Capacity[a]
Plain paper	Letter	216 x 279 mm (8.5 x 11 inches)	• 60 to 24 lb (60 to 90 g/m^2) for the tray with multi-pages feeding • 16 to 43 lb (60 to 165 g/m^2) for the tray with single page feeding and the manual tray	• 250 sheets of 75 g/m^2 (20 lb) paper for the standard tray • 1 sheet of paper for the manual tray
	Legal	216 x 356 mm (8.5 x 14 inches)		
	Folio	216 x 330.2 mm (8.5 x 13 inches)		
	Oficio	216 x 343 mm (8.5 x 13.5 inches)		
	A4	210 x 297 mm (8.27 x 11.69 inches)		
	JIS B5	182 x 257 mm (7.18 x 10.12 inches)		
	ISO B5	176 x 250 mm (6.93 x 9.84 inches)		
	Executive	184.2 x 266.7 mm (7.25 x 10.5 inches)		
	A5	148.5 x 210 mm (5.85 x 8.27 inches)		
	A6	105 x 148.5 mm (4.13 x 5.85 inches)		
Envelope	Envelope Monarch	98.4 x 190.5 mm (3.88 x 7.5 inches)	20 to 24 lb (75 to 90 g/m^2)	1 sheet of paper for the manual tray
	Envelope No.10	105 x 241 mm (4.12 x 9.5 inches)		
	Envelope DL	110 x 220 mm (4.33 x 8.66 inches)		
	Envelope C5	162 x 229 mm (6.38 x 9.02 inches)		
	Envelope C6	114 x 162 mm (4.49 x 6.38 inches)		
Transparency	Letter, A4	Refer to the Plain paper section	37 to 39 lb (138 to 146 g/m^2)	
Labels	Letter, A4	Refer to the Plain paper section	32 to 40 lb (120 to 150 g/m^2)	
Card stock	Letter, A4	Refer to the Plain paper section	24 to 43 lb (90 to 163 g/m^2)	
Minimum size (custom)		76 x 127 mm (3 x 5 inches)	16 to 43 lb (60 to 165 g/m^2)	Refer to the above Capacity sections
Maximum size (custom)		216 x 356 mm (8.5 x 14 inches)		

a. Maximum capacity may differ depending on print media weight, thickness and environmental conditions.

Print media for manual duplex printing

Type	Size	Weight
Plain paper	A4, Letter, Oficio, Legal, and Folio	20 to 24 lb (75 to 90 g/m^2)

Guidelines for selecting and storing print media

When selecting or loading paper, envelopes, or other print media, keep these guidelines in mind:

- Always use print media that conform with the specifications listed on the next column.
- Attempting to print on damp, curled, wrinkled, or torn paper can cause paper jams and poor print quality.
- For the best print quality, use only high quality copier grade paper specifically recommended for use in laser printers.
- Avoid using the following print media types:
  - Paper with embossed lettering, perforations, or a texture that is too smooth or too rough
  - Erasable bond paper
  - Multi-paged paper
  - Synthetic paper and thermally reactive paper
  - Carbonless paper and Tracing paper.
- Use of these types of paper could result in paper jams, chemical smells, and damage to your printer.
- Store print media in its ream wrapper until you are ready to use it. Place cartons on pallets or shelves, not on the floor. Do not place heavy objects on top of the paper, whether it is packaged or unpackaged. Keep it away from moisture or other conditions that can cause it to wrinkle or curl.
- Store unused print media at temperatures between 15° C and 30° C (59° F to 86° F). The relative humidity should be between 10% and 70%.
- Store unused print media in a moisture-proof wrap, such as a plastic container or bag, to prevent dust and moisture from contaminating your paper.
- Load special print media types one sheet at a time through the manual tray to avoid paper jams.
- To prevent print media, such as transparencies and label sheets, from sticking together, remove them as they print out.

Guidelines for special print media

Type	Guidelines
Envelopes	• Successful printing on envelopes depends upon the quality of the envelopes. When selecting envelopes, consider the following factors: - Weight: The weight of the envelope paper should not exceed 90 g/m^2 (24 lb) or jamming may occur. - Construction: Prior to printing, envelopes should lie flat with less than 6 mm (0.25 inches) curl, and should not contain air. - Condition: Envelopes should not be wrinkled, nicked, or otherwise damaged. - Temperature: You should use envelopes that are compatible with the heat and pressure of the printer during operation. • Use only well-constructed envelopes with sharp and well creased folds. • Do not use stamped envelopes. • Do not use envelopes with clasps, snaps, windows, coated lining, self-adhesive seals, or other synthetic materials. • Do not use damaged or poorly made envelopes. • Be sure the seam at both ends of the envelope extends all the way to the corner of the envelope. 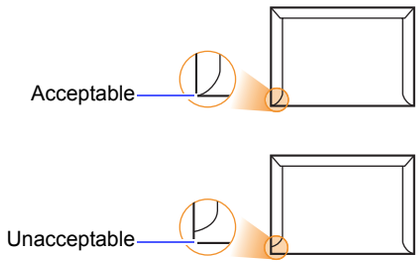 • Envelopes with a peel-off adhesive strip or with more than one flap that folds over to seal must use adhesives compatible with the printer's fusing temperature of 180° C (356° F) for 0.1 second. The extra flaps and strips might cause wrinkling, creasing, or jams, and may even damage the fuser. • For the best print quality, position margins no closer than 15 mm (0.6 inches) from the edges of the envelope. • Avoid printing over the area where the envelope's seams meet.

Type	Guidelines
Transparencies	• To avoid damaging the printer, use only transparencies designed for use in laser printers. • Transparencies used in the printer must be able to withstand 180° C (356° F), the printer's fusing temperature. • Place them on a flat surface after removing them from the printer. • Do not leave them in the paper tray for long periods of time. Dust and dirt may accumulate on them, resulting in spotty printing. • To avoid smudging caused by fingerprints, handle them carefully. • To avoid fading, do not expose printed transparencies to prolonged sunlight. • Ensure that transparencies are not wrinkled, curled, or have any torn edges.
Labels	• To avoid damaging the printer, use only labels designed for use in laser printers. • When selecting labels, consider the following factors: - Adhesives: The adhesive material should be stable at 180° C (356° F), the printer's fusing temperature. - Arrangement: Only use labels with no exposed backing between them. Labels can peel off sheets that have spaces between the labels, causing serious jams. - Curl: Prior to printing, labels must lie flat with no more than 13 mm (5 inches) of curl in any direction. - Condition: Do not use labels with wrinkles, bubbles, or other indications of separation. • Make sure that there is no exposed adhesive material between labels. Exposed areas can cause labels to peel off during printing, which can cause paper jams. Exposed adhesive can also cause damage to printer components. • Do not run a sheet of labels through the printer more than once. The adhesive backing is designed for only a single pass through the printer. • Do not use labels that are separating from the backing sheet or are wrinkled, bubbled, or otherwise damaged.
Card stock or custom-sized materials	• Do not print on print media smaller than 76 mm (3 inches) wide or 127 mm (5 inches) long. • In the software application, set margins at least 6.4 mm (0.25 inches) away from the edges of the material.

Type	Guidelines
Preprinted paper	• Letterhead must be printed with heat-resistant ink that will not melt, vaporize, or release hazardous emissions when subjected to the printer's fusing temperature of 180° C (356° F) for 0.1 second. • Letterhead ink must be non-flammable and should not adversely affect printer rollers. • Forms and letterhead should be sealed in a moisture-proof wrapping to prevent changes during storage. • Before you load preprinted paper, such as forms and letterhead, verify that the ink on the paper is dry. During the fusing process, wet ink can come off preprinted paper, reducing print quality.

Loading paper

Load the print media you use for the majority of your print jobs in the tray. The tray can hold a maximum of 250 sheets of 75 g/m^2 (20 lb) plain paper.

Using the standard tray

To load paper, open the tray and load paper with the side to be printed on facing up.

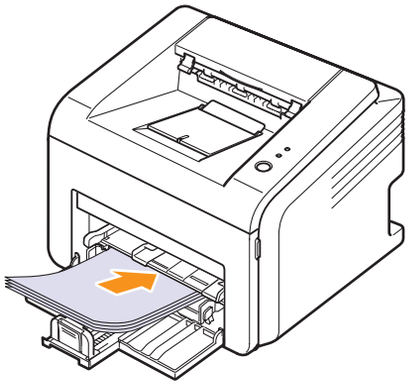

You can load letterhead paper with the design side face up. The top edge of the sheet with the logo should be entered into the printer first.

Notes

- If you experience problems with paper feed, place one sheet at a time in the manual tray.
- You can load previously printed paper. The printed side should be facing down with an uncurled edge enter the printer first. If you experience problems with paper feed, turn the paper around. Note that the print quality is not guaranteed.

Using the manual tray

The manual tray can hold special sizes and types of print media, such as transparency, postcard, note card, and envelope. It is useful for single page printing on special print media.

To load paper in the manual tray:

1 Load one sheet of paper **with the side to be printed on facing up**.

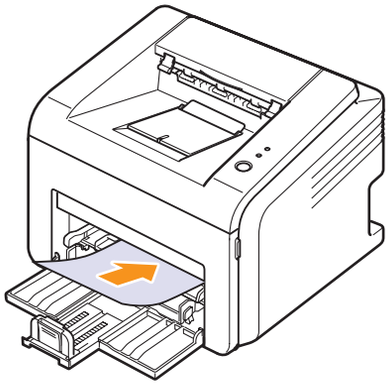

Depending on the print media type you are using, keep the following loading guidelines:

- Envelopes: Flap side down and with the stamp area on the top left side.
- Transparencies: Print side up and the top with the adhesive strip entering the printer first.
- Labels: Print side up and the top short edge entering the printer first.
- Preprinted paper: Design side up and the top edge entering the printer first.
- Card stock: Print side up and the short edge entering the printer first.
- Previously printed paper: Previously printed side down and an uncurled edge entering the printer first.

Note

- For transparency, hold it by the edges and avoid touching the print side. Oils from your fingers can cause print quality problems.

2 Adjust the manual tray paper width guides to the width of the paper. Do not force too much, or the paper will bend, which could result in a paper jam or skew.

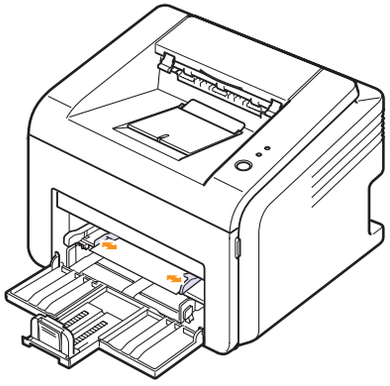

3 When you print a document, set the paper source and type in the software application. See the **Software Section**.

Tips on using the manual tray

- Load only one sheet of print media at a time in the manual tray.
- To prevent paper jams, do not add paper when there is still paper in the manual tray. This also applies to the standard tray.
- Print media should be loaded face up with the top edge going into the manual tray first and be placed in the center of the tray.
- Always load only the print media specified in page 5.2 to avoid paper jams and print quality problems.

Using manual feed mode

You can manually load a sheet of print media in the manual tray if you select **Manual Feed** in the **Source** option from the **Paper** tab when you change print settings to print a document. See the **Software Section**. Manually loading paper can be helpful when you want to check the print quality after each page is printed.

Load paper sheet-by-sheet in the manual tray, send print data to print the first page, and press the **Cancel** button on the control panel to print each following page.

1 Load the paper in the manual tray **with the side to be printed on facing up**.

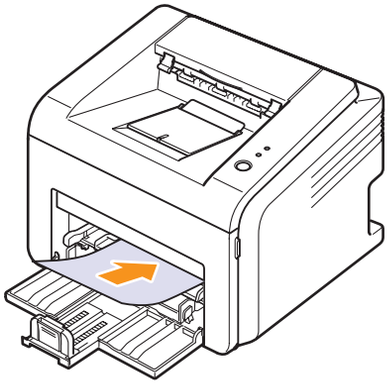

2 Adjust the manual tray paper width guides to the width of the paper. Do not force too much, or the paper will bend, which could result in a paper jam or skew.

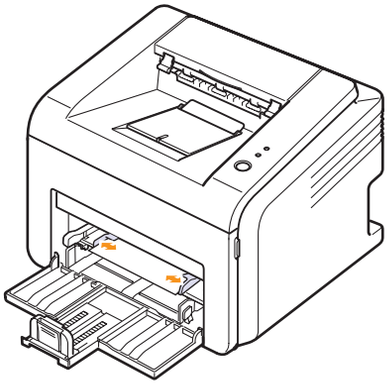

3 When you print a document, set the paper source to **Manual Feed** and select the appropriate paper size and type in the software application. See the **Software Section**.

4 Print a document.

5 Press the **Cancel** button.

The printer picks up the print media and prints.

Note

- If you do not press the **Cancel** button, after a pause the printer will automatically pick the print media.

6 Insert the next sheet into the manual tray and press the **Cancel** button.

Repeat this step for every page to be printed.

Knowing an output location

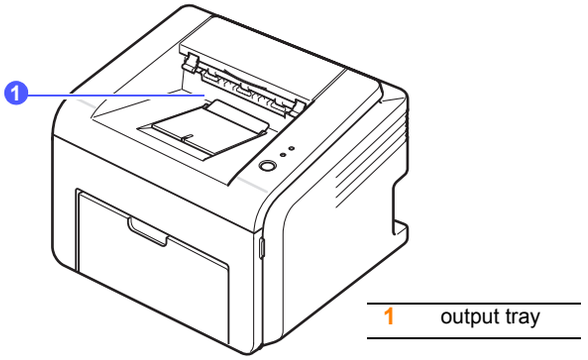

1 output tray

The output tray collects paper face down, in the order in which the sheets were printed.

Note

- If you continuously print many pages, the surface of the output tray may become hot. Be careful not to touch the surface, and especially keep children away from the surface.
- The output tray can hold up to 100 sheets of 75 g/m^2 (20 lb) plain paper. Remove the pages so that the tray is not overloaded.

6 Basic printing

This chapter explains common printing tasks.

This chapter includes:

- **Printing a document**
- **Canceling a print job**

Printing a document

This printer allows you to print from various Windows, Macintosh, or Linux applications. The exact steps for printing a document may vary depending on the application you use.

For details about printing, see the **Software Section**.

Canceling a print job

If the print job is waiting in a print queue or print spooler, such as the printer group in Windows, delete the job as follows:

1 Click the Windows **Start** button.

2 For Windows 98/Me/NT 4.0/2000, select **Settings** and then **Printers**.

For Windows XP/2003, select **Printers and Faxes**.

3 Double-click the **Samsung ML-2570 Series**, **Samsung ML-2570 Series PCL 6** or **Samsung ML-2570 Series PS** icon.

4 From the **Document** menu, select **Cancel Printing** (Windows 98/Me) or **Cancel** (Windows NT 4.0/2000/XP/2003).

Note

- You can access this window simply by double-clicking the printer icon at the bottom right corner of the Windows desktop.

You can also cancel the current job by pressing the **Cancel** button on the control panel of your printer.

7 Ordering supplies and accessories

This chapter provides information on the toner cartridge and accessory that are available for your printer.

This chapter includes:

- **Toner cartridge**
- **Accessory**
- **How to purchase**

Toner cartridge

When the toner runs out, you can order the following type of toner cartridge for your printer:

Type	Yield[a]	Part number
High yield	3,000 pages	ML-2010D3

a. ISO 19752 5% coverage

Accessory

You can purchase and install the following accessory to your ML-2510 and ML-2570 printer:

Accessory	Description	Part number
Ethernet 10/100 Base TX external wired network interface server	Allows you to connect your printer to a network environment using the external wired network server.	ML-00ND

How to purchase

To order Samsung-authorized supplies or accessories, contact your local Samsung dealer or the retailer where you purchased your printer, or visit www.samsungprinter.com and select your country/region for information on calling for technical support.

8 Maintenance

This chapter provides information for maintaining your printer and the toner cartridge.

This chapter includes:

- **Cleaning the printer**
- **Maintaining the toner cartridge**
- **Printing a configuration page**
- **Maintenance parts**

Cleaning the printer

During the printing process, paper, toner, and dust particles can accumulate inside the printer. This buildup can cause print quality problems, such as toner specks or smearing.

Caution

- Cleaning the cabinet of the printer with cleaning materials containing large amounts of alcohol, solvents, or other strong substances can discolor or crack the cabinet.

Cleaning the outside of the printer

Clean the cabinet of the printer with a soft, lint-free cloth. You can dampen the cloth slightly with water, but be careful not to let any water drip onto or into the printer.

Cleaning the inside of the printer

1 Turn the printer off and unplug the power cord. Wait for the printer to cool down.

2 Open the front cover and pull the toner cartridge out. Set it on a clean flat surface.

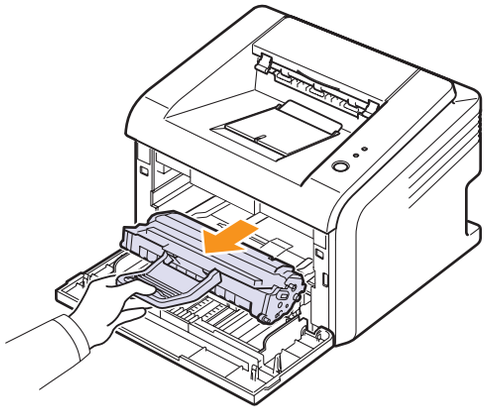

Caution

- To prevent damage to the toner cartridge, do not expose it to light for more than a few minutes. Cover it with a piece of paper, if necessary.
- Do not touch the green surface underside of the toner cartridge. Use the handle on the cartridge to avoid touching this area.

3 Pull the manual tray out.

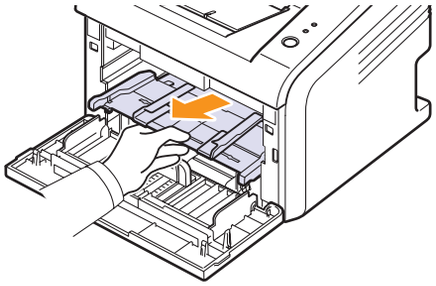

4 With a dry lint-free cloth, wipe away any dust and spilled toner from the toner cartridge area and the toner cartridge cavity.

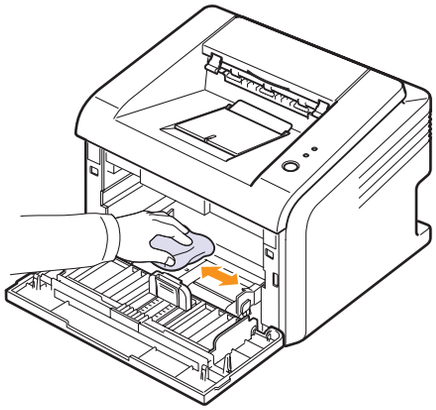

Caution

- While cleaning the inside of the printer, be careful not to reach too far into the printer. The fuser area may be hot.

5 Gently swab the long strip of glass (LSU) inside the top of the cartridge and check for dirt or dust.

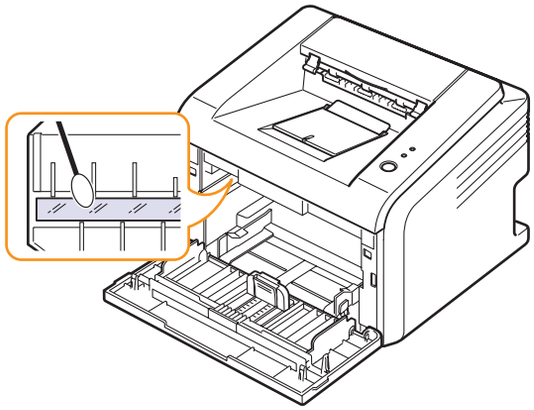

Note

- The long strip of glass is hard to locate.

6 Reinsert the manual tray.

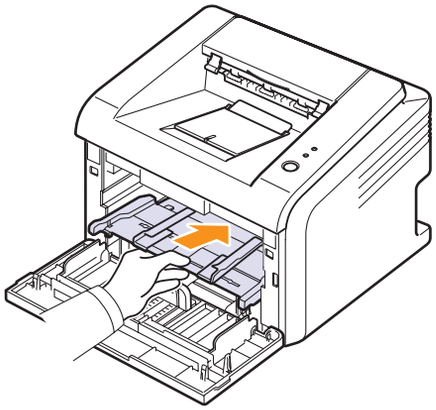

7 Hold the toner cartridge by the handle and slowly insert the cartridge into the opening in the printer.

Tabs on the sides of the cartridge and corresponding grooves within the printer will guide the cartridge into the correct position until it locks into place completely.

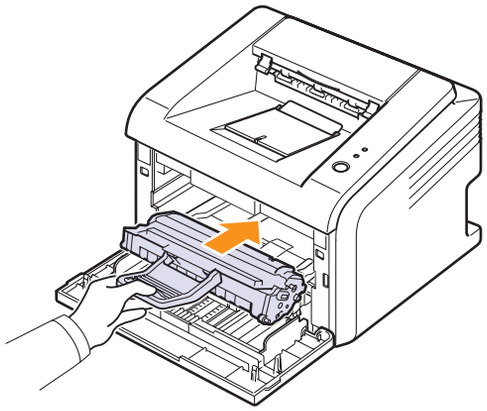

8 Close the front cover. Make sure that the cover is securely closed.

9 Plug in the power cord and turn the printer on.

Maintaining the toner cartridge

Toner cartridge storage

To get the most from the toner cartridge, keep the following guidelines in mind:

- Do not remove the toner cartridge from its package until ready for use.
- Do not refill the toner cartridge. The printer warranty does not cover damage caused by using a refilled cartridge.
- Store toner cartridge in the same environment as the printer.
- To prevent damage to the toner cartridge, do not expose it to light for more than a few minutes.

Expected cartridge life

The life of the toner cartridge depends on the amount of toner that print jobs require. When printing text at ISO 19752 5% coverage, a new toner cartridge lasts an average of 3,000 pages. (The original toner cartridge supplied with the printer lasts an average of 1,000 pages.) The actual number may also be different depending on the print density of the pages you print on, and the number of pages may be affected by operating environment, printing interval, print media type, and print media size. If you print a lot of graphics, you may need to change the cartridge more often.

Redistributing toner cartridge

When the toner cartridge is near the end of its life:

- White streaks and light printing occur.
- The Smart Panel program window appears on the computer telling you that the toner level is low.
- The **Error** LED blinks red.

If this happens, you can temporarily reestablish print quality by redistributing the remaining toner in the cartridge. In some cases, white streaks or light printing will still occur even after you have redistributed the toner.

1 Open the front cover.

2 Pull the toner cartridge out.

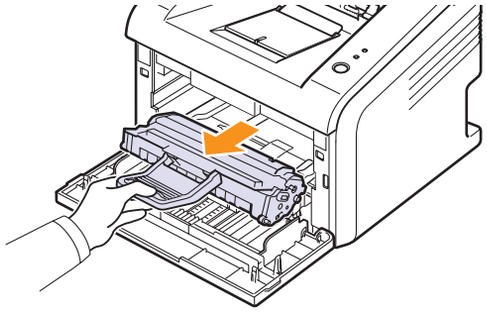

Caution

- Avoid reaching too far into the printer. The fuser area may be hot.
- To prevent damage to the toner cartridge, do not expose it to light for more than a few minutes. Cover it with a piece of paper, if necessary.
- Do not touch the green surface underside of the toner cartridge. Use the handle on the cartridge to avoid touching this area.

3 Thoroughly shake the cartridge 5 or 6 times to distribute the toner evenly inside the cartridge.

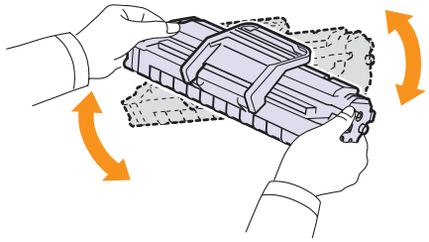

Caution

- If toner gets on your clothing, wipe it off with a dry cloth and wash clothing in cold water. Hot water sets toner into fabric.

4 Hold the toner cartridge by the handle and slowly insert the cartridge into the opening in the printer.

Tabs on the sides of the cartridge and corresponding grooves within the printer will guide the cartridge into the correct position until it locks into place completely.

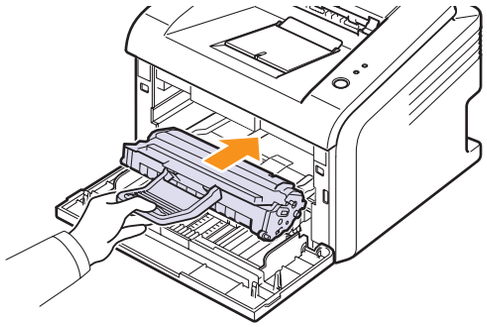

5 Close the front cover. Make sure that the cover is securely closed.

Replacing the toner cartridge

When the toner cartridge is completely empty:

- The Smart Panel program window appears on the computer telling you that the toner cartridge is empty.
- The **Error** LED lights red.

At this stage, the toner cartridge needs to be replaced. For toner cartridge ordering information, see page 7.1.

1 Open the front cover.

2 Pull the old toner cartridge out.

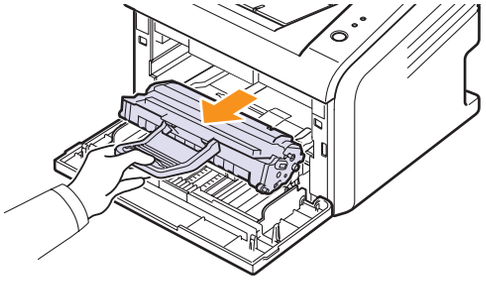

3 Remove the new toner cartridge from its bag.

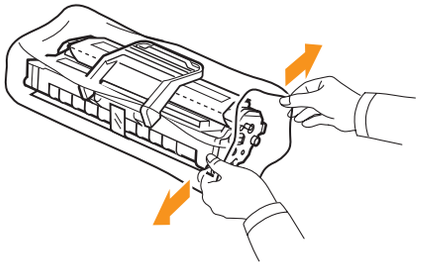

Caution

- Do not use sharp objects, such as a knife or scissors, to open the toner cartridge package. They might scratch the drum of the cartridge.

4 Thoroughly shake the cartridge 5 or 6 times to distribute the toner evenly inside the cartridge.

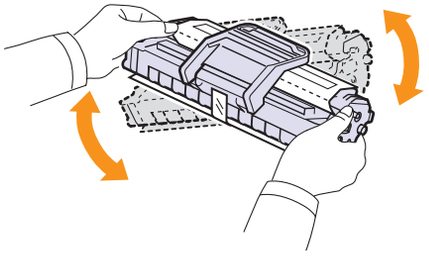

Thoroughly shake the cartridge to assure maximum copies per cartridge.

5 Remove the paper protecting the toner cartridge by pulling the packing tape.

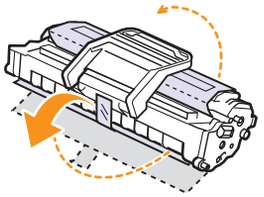

Note

- Refer to the helpful pictures on the cartridge wrapping paper.

Caution

- If toner gets on your clothing, wipe it off with a dry cloth and wash clothing in cold water. Hot water sets toner into fabric.
- To prevent damage to the toner cartridge, do not expose it to light for more than a few minutes. Cover it with a piece of paper, if necessary.
- Do not touch the green surface underside of the toner cartridge. Use the handle on the cartridge to avoid touching this area.

6 Hold the toner cartridge by the handle and slowly insert the cartridge into the opening in the printer.

Tabs on the sides of the cartridge and corresponding grooves within the printer will guide the cartridge into the correct position until it locks into place completely.

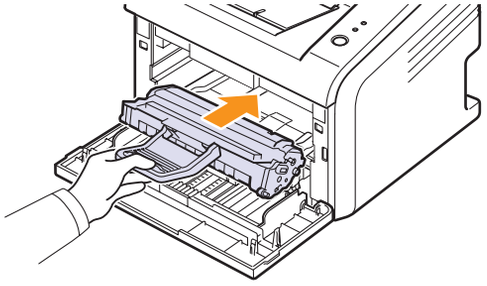

7 Close the front cover. Make sure that the cover is securely closed.

Printing a configuration page

You can print a configuration page to view current printer settings, or to help troubleshoot printer problems.

Press and hold the **Cancel** button for about 5 seconds.

A configuration page prints out.

Maintenance parts

To avoid print quality and paper feed problems resulting from worn parts and to maintain your printer in top working condition, the following items will need to be replaced when the specified number of pages have been printed or when the life span of each item has expired.

Items	Yield (Average)
Transfer roller	Approx. 50,000 pages
Fuser unit	Approx. 50,000 pages
Pick-up roller	Approx. 50,000 pages

Samsung highly recommends that an authorized service provider, dealer or the retailer where you bought the printer replaces the items.

9 Troubleshooting

This chapter provides helpful information for what to do if you encounter an error while using your printer.

This chapter includes:

- **Clearing paper jams**
- **Troubleshooting checklist**
- **Understanding the LEDs**
- **Solving general printing problems**
- **Solving print quality problems**
- **Common Windows problems**
- **Common PostScript problems**
- **Common Linux problems**
- **Common Macintosh problems**

Clearing paper jams

Note

- When removing paper that is jammed in the printer, if possible always pull the paper in the direction that it normally moves so as not to damage internal components. Always pull firmly and evenly; do not jerk the paper. If the paper tears, ensure that all fragments of paper are removed; otherwise a jam will occur again.

When a paper jam occurs, the **Error** LED lights red. Open and close the front cover. The jammed paper automatically exits the printer.

In the paper feed area

In the standard tray

1 Remove the jammed paper by gently pulling it straight out. Make sure that all of the paper is properly aligned in the standard tray.

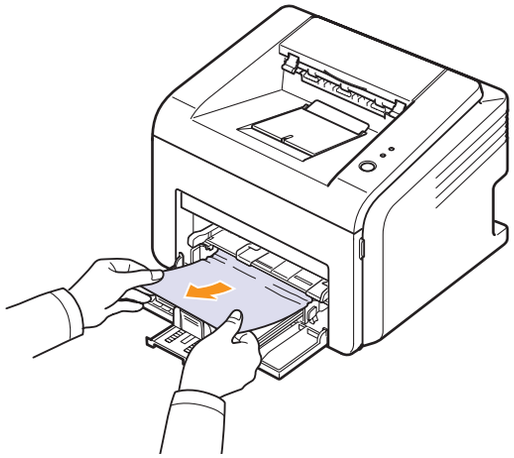

If the paper does not move when you pull, or if you do not see the paper in this area, check the fuser area around the toner cartridge. See page 9.2.

2 Open and close the front cover to resume printing the document from failed pages.

In the manual tray

1 Remove the jammed paper in the manual tray by gently pulling it straight out.

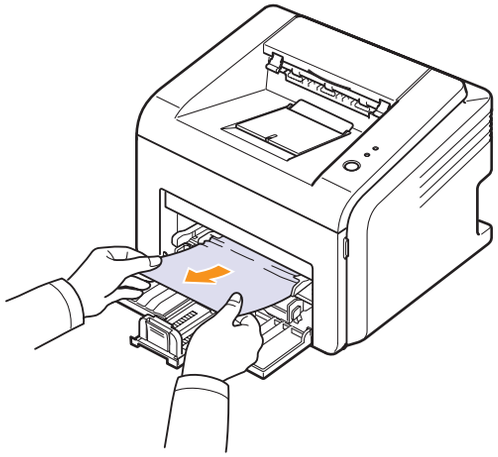

If the paper does not move when you pull, or if you do not see the paper in this area, check the fuser area around the toner cartridge. See page 9.2.

2 Open and close the front cover to resume printing the document from failed pages.

Around the toner cartridge

Note
- The fuser area is hot. Be careful when removing paper from the printer.

1 Open the front cover and pull the toner cartridge out.

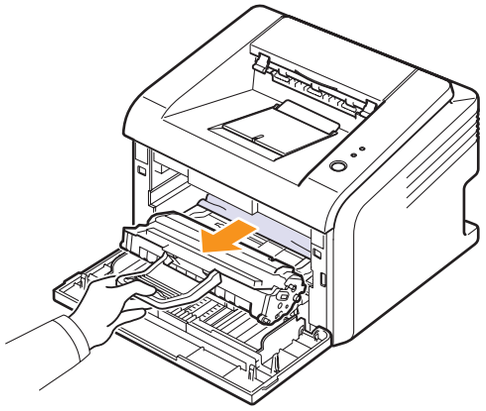

Caution
- To prevent damage to the toner cartridge, do not expose it to light for more than a few minutes. Cover it with a piece of paper, if necessary.
- Do not touch the green surface underside of the toner cartridge. Use the handle on the cartridge to avoid touching this area.

2 If necessary, pull the manual tray out.

3 Remove the jammed paper by gently pulling it out.

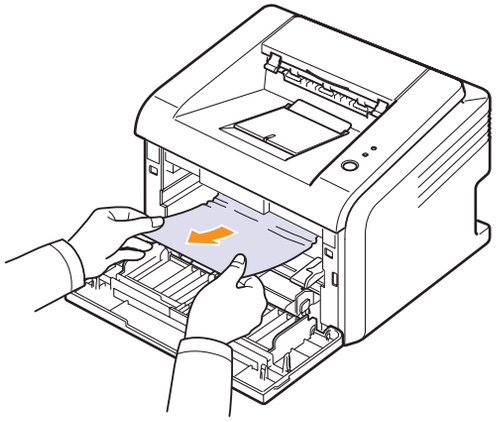

If you do not see the jammed paper or if there is any resistance removing the paper, stop pulling and go to the paper exit area. See page 9.3.

4 If necessary, reinsert the manual tray.

5 Replace the toner cartridge and close the front cover. Printing automatically resumes.

In the paper exit area

1 Open and close the front cover. The jammed paper is automatically ejected from the printer.

2 Gently pull the jammed paper out of the output tray.

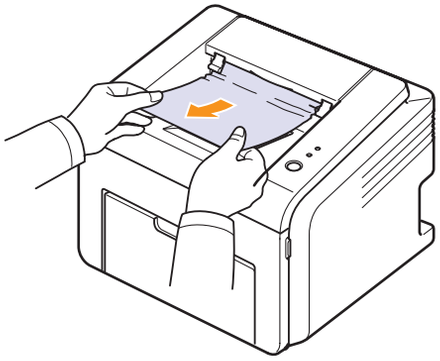

If you do not see the jammed paper or if there is any resistance when you pull, stop pulling and go to the next step.

3 Open the top cover and inner cover.

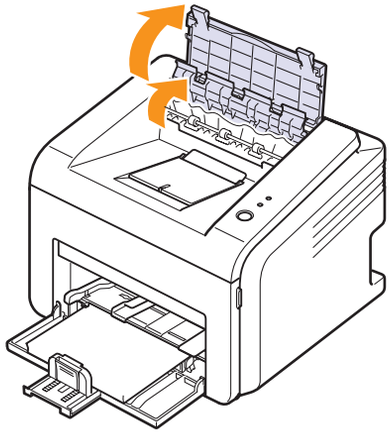

Caution

- When removing the jammed paper, be careful not to touch the heat roller (located underneath the inner cover). It is hot and could cause burns!
- The top and inner cover themselves may also be hot due to the heat roller. Allows the printer to cool before opening the covers.

4 Loosen the jammed paper if it is caught in the heat roller. Then gently pull the jammed paper out.

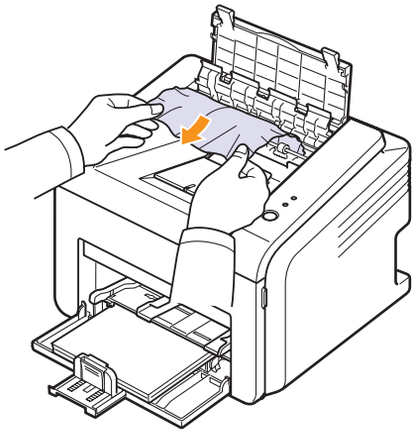

5 Close the inner cover and top cover. Printing automatically resumes.

Tips for avoiding paper jams

By selecting the correct print media types, most paper jams can be avoided. When a paper jam occurs, follow the steps outlined on page 9.1.

- Follow the procedures on page 5.4. Ensure that the adjustable guides are positioned correctly.
- Do not overload the tray.
- Do not remove paper from the tray while your printer is printing.
- Flex, fan, and straighten paper before loading.
- Do not use creased, damp, or highly curled paper.
- Do not mix paper types in the tray.
- Use only recommended print media. See page 5.1.
- Ensure that the recommended print side of print media is facing up in the tray.

Troubleshooting checklist

If the printer is not working properly, consult the following checklist. If the printer does not pass a step, follow the corresponding suggested solutions.

Condition	Suggested solutions
Make sure that the **Online** LED on the control panel lights green.	• If the **Online** LED is off, check the power cord connection. Check the power switch. Check the power source by plugging the power cord into another outlet.
Print a demo page to verify that the printer is feeding paper correctly. See page 2.1.	• If a demo page does not print, check the paper supply in the tray. • If the paper jams in the printer, see page 9.1.
Check the demo page to see if it printed correctly.	If there is a print quality problem, see page 9.7.
Print a short document from a software application to verify that the computer and printer are connected and are communicating correctly.	• If the page does not print, check the cable connection between the printer and the computer. • Check the print queue or print spooler to see if the printer has been paused. • Check the software application to ensure that you are using the proper printer driver and communication port. If the page is interrupted during printing, see page 9.5.
If completing the checklist does not resolve the printer problem, check the following troubleshooting sections.	• “Understanding the LEDs” on page 9.4. • “Solving general printing problems” on page 9.5. • “Common Windows problems” on page 9.9. • “Common PostScript problems” on page 9.9. • “Common Linux problems” on page 9.10. • “Common Macintosh problems” on page 9.11.

Understanding the LEDs

LED	Status		Description
Error	Red	On	• The toner is totally exhausted. Remove the old toner cartridge and install a new one. See page 8.4. • A paper jam has occurred. To solve the problem, see page 9.1. • The cover is open. Close the cover. • There is no paper in the tray. Load paper in the tray. • The printer has stopped printing due to a major error.
		Blinking	• A minor error is occurring and the printer is waiting for the error to be cleared. When the problem is cleared, the printer resumes printing. • The toner cartridge is low. Order a new toner cartridge. You can temporarily improve print quality by redistributing the toner. See page 8.3.
Online	Off		• The printer is off-line and cannot print. • The printer is in power save mode. When data is received, it switches to on-line automatically.
	Green	On	The printer is on-line and can receive data from the computer.
		Blinking	• Blinks slowly indicates that the printer is receiving data from the computer. • Blinks quickly indicates that the printer is printing data.

Solving general printing problems

For problems with the operation of your printer, refer to the table for suggested solutions.

Condition	Possible cause	Suggested solutions
The printer does not print.	The printer is not receiving power.	Check the power cord connections. Check the power switch and the power source.
	The printer is not selected as the default printer.	Select **Samsung ML-2570 Series**, **Samsung ML-2570 Series PCL 6** or **Samsung ML-2570 Series PS** as your default printer.
	The printer cover is not closed.	Close the printer cover.
	Paper is jammed.	Clear the paper jam. See page 9.1.
	No paper is loaded.	Load paper. See page 5.4.
	The toner cartridge is not installed.	Install the toner cartridge.
	The printer may be in manual feed mode and out of paper.	Add paper to the manual tray, and press the **Cancel** button on the control panel.
	The connection cable between the computer and the printer is not connected properly.	Disconnect the printer cable and reconnect it.
	The connection cable between the computer and the printer is defective.	If possible, attach the cable to another computer that is working properly and try to print a document. You can also try using a different printer cable.
	The port setting is incorrect.	Check the Windows printer setting to make sure that the print job is sent to the correct port. If the computer has more than one port, make sure that the printer is attached to the correct one.

Condition	Possible cause	Suggested solutions
The printer does not print. (Continued)	The printer may be configured incorrectly.	Check the printer properties to ensure that all of the print settings are correct.
	The printer driver may be incorrectly installed.	Reinstall the printer driver; See the **Software Section**. Try printing a test page.
	The printer is malfunctioning.	Check the LEDs on the control panel to determine if the printer is indicating a system error.
Printer selects print media from the wrong paper source.	The paper source selection in the printer properties may be incorrect.	For many software applications, the paper source selection is found under the **Paper** tab within the printer properties. Select the correct paper source. See the **Software Section**.
Paper does not feed into the printer.	Paper has not been loaded correctly.	Remove paper from the tray and reload it correctly. Check that the adjustable guides are set correctly.
	There is too much paper in the tray.	Remove excess paper from the tray.
	The paper is too thick.	Use only paper that meets printer specifications.
Print job is extremely slow.	The job may be very complex.	Reduce the complexity of the page(s) or try adjusting the print quality settings. To adjust the print quality settings, reduce the resolution. If you have set the resolution to **1200 dpi (Best)**, change it to **600 dpi (Normal)**. See the **Software Section**. Change the port setting to the USB or network port to improve print speed. Your printer prints A4-sized paper at 24 ppm and letter-sized paper at 25 ppm.

Condition	Possible cause	Suggested solutions
Print job is extremely slow. (Continued)	If using Windows 98/Me, the Spooling Setting may be set incorrectly.	From the **Start** menu, choose **Settings** and **Printers**. Right-click the **Samsung ML-2570 Series**, **Samsung ML-2570 Series PCL 6**, or **Samsung ML-2570 Series PS** printer icon, choose **Properties**, click the **Details** tab, and then choose the **Spool Settings** button. Select the desired spool setting.
	The computer may have insufficient random-access memory (RAM).	Simplify the page layout and remove any unnecessary graphics from the document.
Half the page is blank.	The page layout is too complex.	Simplify the page layout and remove any unnecessary graphics from the document.
	The page orientation setting may be incorrect.	Change the page orientation in your application. See the **Software Section**.
	The paper size and the paper size settings do not match.	Ensure that the paper size in the printer driver settings matches the paper in the tray. Or, ensure that the paper size in the printer driver settings matches the paper selection in the software application settings you use.
The paper keeps jamming.	There is too much paper in the tray.	Remove excess paper from the tray. If printing on special print media, use the manual tray.
	An incorrect type of paper is being used.	Use only paper that meets printer specifications. If printing on special print media, use the manual tray.
	There may be debris inside the printer.	Open the front cover and remove the debris.

Condition	Possible cause	Suggested solutions
The printer prints, but the text is wrong, garbled, or incomplete.	The printer cable is loose or defective.	Disconnect and reconnect the printer cable. Try a print job that you have already printed successfully. If possible, attach the cable and printer to another computer and try a print job that you know works. Finally, try a new printer cable.
	The wrong printer driver was selected.	Check the application's printer selection menu to ensure that your printer is selected.
	The software application is malfunctioning.	Try printing a job from another application.
	The operating system is malfunctioning.	If printing from Windows (any version), exit to a DOS prompt and verify functionality with the following command: At a **C:** prompt, type **Dir LPT1**, and press **Enter**. (This assumes you are connected to LPT1.) Exit Windows and reboot the computer. Turn the printer off and then back on again.
Pages print, but are blank.	The toner cartridge is defective or out of toner.	Redistribute the toner cartridge. See page 8.3. If necessary, replace the toner cartridge. See page 8.4.
	The file may have blank pages.	Check the file to ensure that it does not contain blank pages.
	Some parts, such as the controller or the board, may be defective.	Contact a service representative.
The illustrations print incorrectly in Adobe Illustrator.	The setting in the software application is wrong.	Select **Download as Bitmap** in the **Advanced Options** window of the graphic properties. Print the document again.

Solving print quality problems

Dirt inside of the printer or improper paper loading may reduce print quality. See the table below to troubleshoot problems.

Condition	Suggested solutions
Light or faded print	If a vertical white streak or faded area appears on the page: • The toner supply is low. You may be able to temporarily extend the toner cartridge life. See page 8.3. If this does not improve print quality, install a new toner cartridge. • The paper may not meet paper specifications (for example, the paper is too moist or too rough). See page 5.3. • If the entire page is light, the print resolution setting is too light or toner save mode is on. Adjust the print resolution and toner save mode in the printer properties. See the **Software Section**. • A combination of faded or smeared defects may indicate that the printer needs cleaning. See page 8.1. • The surface of LSU may be dirty. Clean the LSU. See page 8.2.
Toner spots	• The paper may not meet specifications (for example, the paper is too moist or too rough). See page 5.3. • The transfer roller or paper path may be dirty. See page 8.1.
Dropouts	If generally rounded, faded areas occur randomly on the page: • A single sheet of paper may be defective. Try reprinting the job. • The moisture content of the paper is uneven or the paper has moist spots on its surface. Try a different brand of paper. See page 5.3. • The paper lot is bad. The manufacturing processes can cause some areas to reject toner. Try a different kind or brand of paper. • The toner cartridge may be defective. See “Vertical repetitive defects” on the next column. • If these steps do not correct the problems, contact a service representative.

Condition	Suggested solutions
Vertical lines	If black vertical streaks appear on the page: • The drum inside the toner cartridge has probably been scratched. Install a new toner cartridge. See page 8.4. If white vertical streaks appear on the page: • The surface of the LSU part inside the printer may be dirty. Clean the LSU. See page 8.2.
Gray background	If the amount of background shading becomes unacceptable, the procedures below may fix the problem. • Change to lighter weight pages. See page 5.3. • Check the printer’s environment; low humidity (lower than 20% RH) or high humidity (higher than 80% RH) conditions can increase the amount of background shading. • Remove the old toner cartridge and install a new one. See page 8.4.
Toner smear	• Clean the inside of the printer. See page 8.1. • Check the paper type and quality. See page 5.2. • Remove the toner cartridge and install a new one. See page 8.4.
Vertical repetitive defects	If marks repeatedly appear on the printed side of the page at even intervals: • The toner cartridge may be damaged. If a repetitive mark occurs on the page, install a new toner cartridge. See page 8.4. • Parts of the printer may have toner on them. If the defects occur on the back of the page, the problem will likely correct itself after a few more pages. • The fusing assembly may be damaged. Contact a service representative.

Condition	Suggested solutions
Background scatter	Background scatter results from bits of toner distributed on the printed page. • The paper may be too damp. Try printing with a different batch of paper. Do not open packages of paper until necessary so that the paper does not absorb too much moisture. • If background scatter occurs on an envelope, change the printing layout to avoid printing over areas that have overlapping seams on the reverse side. Printing on seams can cause problems. • If background scatter covers the entire surface area of a printed page, adjust the print resolution through your software application or via the printer properties window.
Misformed characters	• If characters are improperly formed and producing hollowed images, the paper stock may be too slick. Try a different paper. See page 5.3.
Page skew	• Ensure that the paper is loaded properly. • Check the paper type and quality. See page 5.2. • Ensure that the paper is loaded correctly and the adjustable guides are not too tight or too loose against the paper stack.
Curl or wave	• Ensure that the paper is loaded properly. • Check the paper type and quality. Both high temperature and humidity can cause paper curl. See page 5.2. • Turn over the stack of paper in the tray. Also try rotating the paper 180° in the tray.

Condition	Suggested solutions
Wrinkles or creases	• Ensure that the paper is loaded properly. • Check the paper type and quality. See page 5.2. • Turn over the stack of paper in the tray. Also try rotating the paper 180° in the tray.
Back of printouts are dirty	• The transfer roller may be dirty. See page 8.1. • Check for leaking toner. Clean the inside of the printer.
Solid black pages	• The toner cartridge may not be installed properly. Remove the cartridge and reinsert. • The toner cartridge may be defective and need replacing. Install a new toner cartridge. • The printer may require repair. Contact a service representative.
Loose toner	• Clean the inside of the printer. • Check the paper type and quality. See page 5.2. • Install a new toner cartridge. See page 8.4. • If the problem persists, the printer may require repair. Contact a service representative.
Character voids	Character voids are white areas within characters that should be solid black: • If you are using transparencies, try another type of transparency. Because of the composition of the transparency, some character voids may be normal. • You may be printing on the wrong surface on the paper. Turn over the paper in the tray. • The paper may not meet paper specifications. See page 5.3.