SAMSUNG

SAMSUNG DIGITall
everyone's invited™

LASER PRINTER

LAZETT

ML-4500

SAMSUNG LASER PRINTER

User's Guide

This manual is provided for information purposes only. All information included herein is subject to change without notice. Samsung Electronics is not responsible for any damages, direct or indirect, arising from or related to use of this manual.

© 2000 Samsung Electronics Co., Ltd. All rights reserved.

- ML-4500 and Samsung logo are trademarks of Samsung Electronics Co., Ltd.
- Centronics is a trademark of Centronics Data Computer Corporation.
- IBM and IBM PC are trademarks of International Business Machines Corporation.
- Microsoft, Windows, Windows 9x, Windows 2000 and Windows NT are trademarks of Microsoft Corporation.
- GNU Ghostscript software, Copyright (C) 1999. Aladdin Enterprise, Menlo Park, California, and other authors as indicated in its documentation.
- Adobe and Adobe Acrobat Reader are trademarks of Adobe Systems.
- All other brand or product names are trademarks of their respective companies or organizations.

Contents

Chapter 1 Introduction

Special Features ---------- 1.1
Printer Components ---------- 1.2

Chapter 2 Setting Up Your Printer

STEP 1: Unpack Your Printer ---------- 2.1
STEP 2: Install the Toner Cartridge ---------- 2.2
STEP 3: Load Paper ---------- 2.4
STEP 4: Connect to the Computer with a Parallel Cable ----- 2.6
STEP 5: Turn on the Printer ---------- 2.6
STEP 6: Print a Demo Page! ---------- 2.7
STEP 7: Install the Printer Software ---------- 2.7

Chapter 3 Using Control Panel

Control Panel Buttons ---------- 3.1
Control Panel Lights ---------- 3.3

Chapter 4 Print Media

Choosing Paper and Other Media ---------- 4.1
Selecting the Output Location ---------- 4.4
Loading Paper ---------- 4.5
Printing on Envelopes ---------- 4.7
Printing on Heavy Paper ---------- 4.9
Printing on Labels ---------- 4.10
Printing on Transparencies ---------- 4.11
Printing on Preprinted Paper ---------- 4.12
Printing on Card Stocks ---------- 4.13

Chapter 5 Printing Tasks

Printing a Document ---------- 5.1
Printing Multiple Pages on One Sheet of Paper ---------- 5.6
Setting Print Resolution ---------- 5.7
Using Toner Save Mode ---------- 5.8
Using Power Save Mode ---------- 5.9
Using Other Graphic Options ---------- 5.10
Reprinting the Last Page ---------- 5.12
Printing on a Network Environment ---------- 5.13

Chapter 6 Maintaining Your Printer

Maintaining Toner Cartridge ---------- 6.1
Cleaning the Printer ---------- 6.4

Chapter 7 Problem Solving

Troubleshooting Checklist ---------- 7.1
Solving General Printing Problems ---------- 7.2
Clearing Paper Jams ---------- 7.6
Solving Print Quality Problems ---------- 7.11
Troubleshooting Error Messages ---------- 7.17
Common Windows Problems ---------- 7.19

Appendix

Printer Specifications ---------- A.1
Paper Specifications ---------- A.2
Installing Software from Diskette ---------- A.10
Linux Driver Installation ---------- A.13

INDEX

Environmental and Safety Consideration

Laser Safety Statement

The printer is certified in the U.S. to conform to the requirements of DHHS 21 CFR, chapter 1 Subchapter J for Class I(1) laser products, and elsewhere is certified as a Class I laser product conforming to the requirements of IEC 825.

Class I laser products are not considered to be hazardous. The laser system and printer are designed so there is never any human access to laser radiation above a Class I level during normal operation, user maintenance, or prescribed service condition.

WARNING
Never operate or service the printer with the protective cover removed from Laser/Scanner assembly. The reflected beam, although invisible, can damage your eyes.

CAUTION - INVISIBLE LASER RADIATION WHEN THIS COVER OPEN. DO NOT OPEN THIS COVER.

VORSICHT - UNSICHTBARE LASERSTRAHLUNG, WENN ABDECKUNG GEÖFFNET. NICHT DEM STRAHL AUSSETZEN.

ATTENTION - RAYONNEMENT LASER INVISIBLE EN CAS D'OUVERTURE.EXPOSITION DAN GEREUSE AU FAISCEAU.

ATTENZIONE -RADIAZIONE LASER INVISIBILE IN CASO DI APERTURA. EVITARE L'ESPOSIZIONE AL FASCIO.

PRECAUCION -RADIACION LASER IVISIBLE CUANDO SE ABRE. EVITAR EXPONERSE AL RAYO.

ADVARSEL. - USYNLIG LASERSTRÅLNING VED ÅBNING NÅR SIKKERHEDSBRYDERE ER UDE AF FUNKTION. UNDGÅ UDSAETTELSE FOR STRÅLNING.

ADVARSEL. - USYNLIG LASERSTRÅLNING NÅR DEKSEL ÅPNES. STIRR IKKE INN I STRÅLEN. UNNGÅ EKSPONERING FOR STRÅLEN.

VARNING - OSYNLIG LASERSTRÅLNING NÄR DENNA DEL ÄR ÖPPAND OCH SPÄRREN ÄR URKOPPLAD. BETRAKTA EJ STRÅLEN. STRÅLEN ÄR FARLIG.

VARO! - AVATTAESSA JA SUOJALUKITUS OHITETTAESSA OLET ALTTIINA NÄKYMÄTTÖMÄLLE LASERSÄTEILYLLE ÄLÄ KATSO SÄTEESEEN.

Ozone Safety

During normal operation, the Samsung ML-4500 printer produces ozone. the ozone produced does not present a hazard to the operator. However, it is advisable that the machine be operated in a well ventilated area.

If you need additional information about ozone, please request your nearest Samsung dealer.

Power Saver

This printer contains advanced energy conservation technology that reduces power consumption when it is not in active use.

When the printer does not receive data for an extended period of time, power consumption is automatically lowered.

The energy star emblem does not represent EPA endorsement of any product or service.

Radio Frequency Emissions

Fcc Regulations

This equipment has been tested and found to comply with the limits for a Class B digital device, pursuant to Part 15 of the FCC Rules. These limits are designed to provide reasonable protection against harmful interference in a residential installation. This equipment generates, uses and can radiate radio frequency energy and, if not installed and used in accordance with the instructions, may cause harmful interference to radio communications. However, there is no guarantee that interference will not occur in a particular installation.

If this equipment does cause harmful interference to radio or television reception, which can be determined by turning the equipment off and on, the user is encouraged to try to correct the interference by one or more of the following measures:

- Reorient or relocate the receiving antenna.
- Increase the separation between the equipment and receiver.
- Connect the equipment into an outlet on a circuit different from that to which the receiver is connected.
- Consult the dealer or an experienced radio/TV technician for help.

Do not make any changes or modifications to the equipment unless otherwise specified in the manual. If such changes or modifications should be made, you must first stop operation of the equipment.

Use of shielded cable is required to comply with Class B limits in Subpart B of Part 15 of FCC Rules.

Canadian Radio Interference Regulations

This digital apparatus does not exceed the Class B limits for radio noise emissions from digital apparatus as set out in the interference-causing equipment standard entitled "Digital Apparatus", ICES-003 of the Industry and Science Canada.

Cet appareil numérique respecte les limites de bruits radioélectriques applicables aux appareils numériques de Classe B prescrites dans la norme sur le matériel brouilleur: "Appareils Numériques", ICES-003 édictée par l'Industrie et Sciences Canada.

FCC DECLARATION OF CONFORMITY according to FCC Part 15

1. Product Name : Laser Printer

2. Model Number : Samsung ML-4500

3. FCC Rules : TESTED TO COMPLY WITH FCC PART 15 CLASS B

4. Operating Environment : FOR HOME OR OFFICE USE

5. FCC Compliance Statement

This device complies with Part 15 FCC rules. Operating is subject to the following two conditions : (1)This device may not cause harmful interference, and
(2)This device must accept any interference received, including interference that can any cause undesired operation.

6. Information to User

This device has been tested and found to comply with the limits for a Class B digital device, pursuant to Part 15 of the FCC rules. These limits are designed to provide reasonable protection against harmful interference in a residential installation. This equipment generates, uses and can radiate radio frequency energy and, if not installed and used in accordance with the instructions, may cause harmful interference to radio communications. However, there is no guarantee that interference will not occur in a particular installation. If this equipment does cause harmful interference to radio or television reception, which can be determined by turning the equipment off and on, the user is encouraged to try to correct the interference by one or more of the following measures:

(1) Reorient or relocate the receiving antenna.
(2) Increase the separation between the equipment and receiver.
(3) Connect the equipment into an outlet on a circuit different from that to which the receiver is connected.
(4) Consult the dealer or an experienced radio/TV technician for help.

CAUTION: Changes or modifications not expressly approved by the manufacturer responsible for compliance could void the user's authority to operate the equipment.

Party Responsible for Product Compliance

Samsung Electronics America
American QA Lab
85 West Tasman Dr.
San Jose, CA 95134

EC Declaration of Conformity

We,

SAMSUNG ELECTRONICS CO., LTD.
#259, Gong Dan-Dong, Gumi-City, Kyung Buk, Korea

declares sole responsibility that the

Samsung ML-4500 Laser printer

meets the intent of Directive 89/336/EEC for Electromagnetic Compatibility and Low Voltage Directive 73/23/EEC.
Compliance was demonstrated to the following specifications as listed in the official journal of the European Communities:

EN 50081-Emissions:
EN 55022 Radiated, Class B
EN 55022 Conducted, Class B
EN 61000-3-2 Power Harmonics
EN 61000-3-3 Voltage Fluctuations and Flicker

EN 50082-Immunity:
IEC 801-2 Electrostatic Discharge
IEC 801-3 RF Radiated
IEC 801-4 Fast Transient/Burst

EN 60950-Safety

chapter 1

Introduction

Congratulations on the purchase of Samsung ML-4500 printer! This chapter provides information on the following topics:

- ♦ Special Features
- ♦ Printer Components

Special Features

Samsung ML-4500 is a versatile, productive printer equipped with special features that improve print quality, giving you a competitive edge. You can:

Print with excellent quality and high speed

- You can print at **600 dots per inch** (dpi). See page 5.7.
- Your printer prints **8 pages-per-minute**.

Handle paper flexibly

- Standard **150-sheet automatic input tray** and a **1-sheet manual input tray** support various sizes and types of paper.
- Two output locations: Select either **the face-down output tray** or **the face-up output slot** for the most convenient access.

Save your time and money

- You can use **Toner Save** mode to use less toner. See page 5.8.
- Print multiple pages on a single sheet of paper to save paper (**N-up printing**). See page 5.6.
- One-touch last page printing is allowed in the Ready mode. See page 5.12.
- The printer automatically **conserves electricity** by substantially reducing power consumption when not printing.
- This product meets **Energy Star** guidelines for energy efficiency.

Print in various environments

- You can print in Window 95/98/2000/NT 4.0.
- Your printer is compatible with the Linux system.

Printer Components

Front View

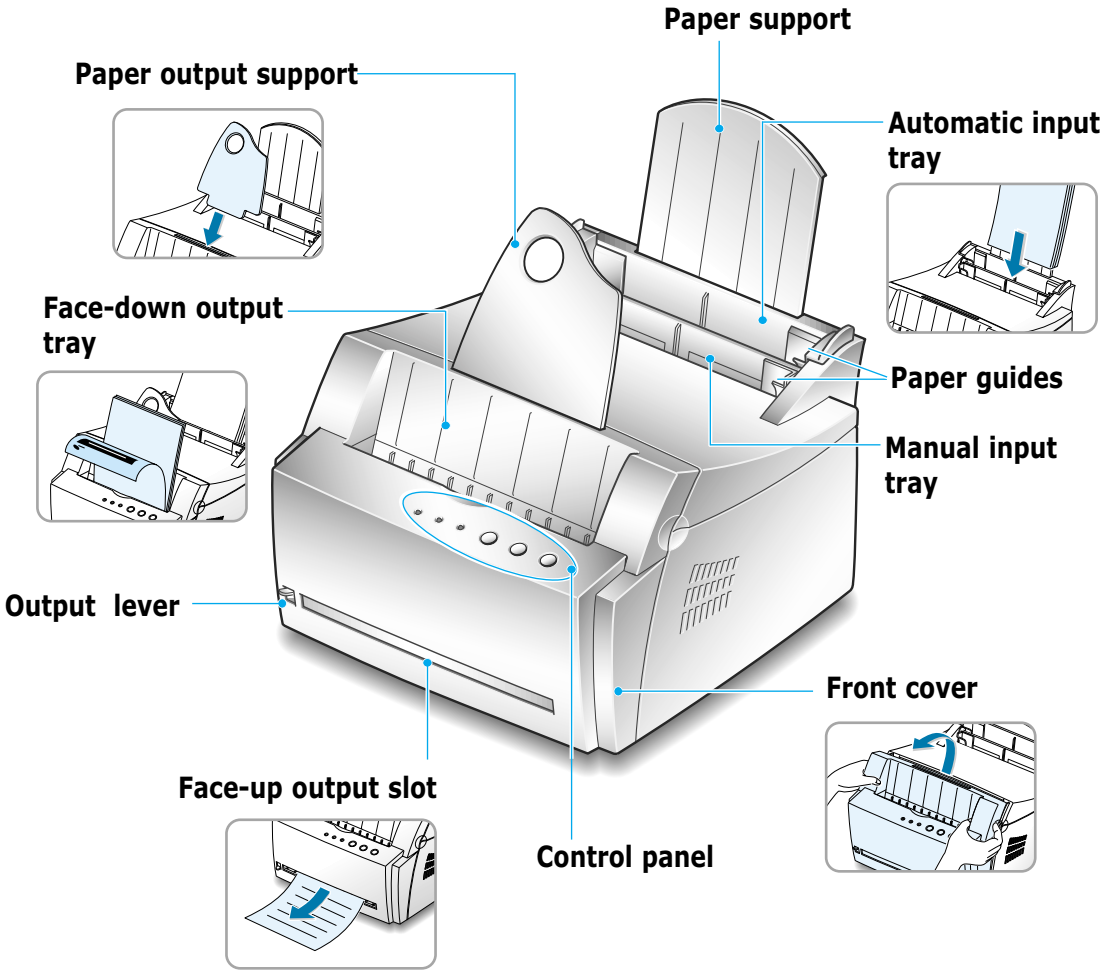

Inside View

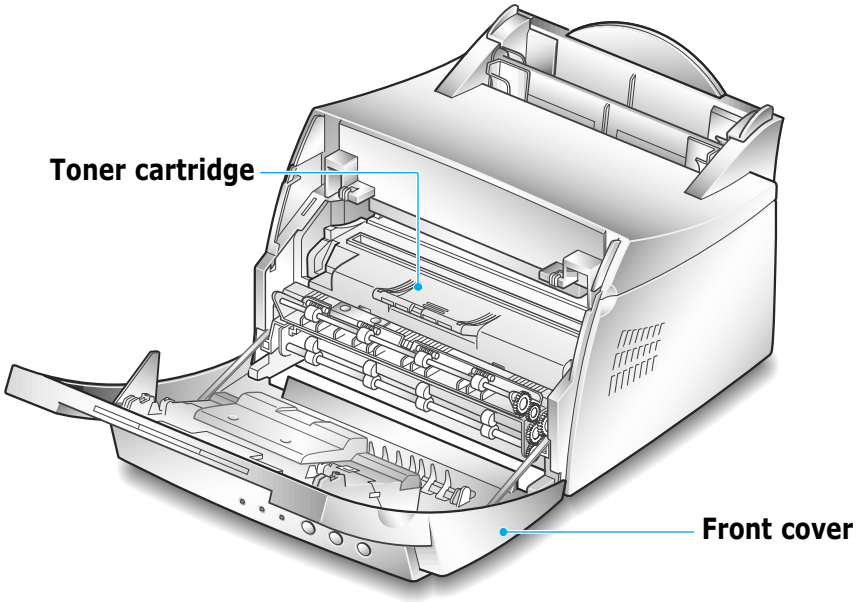

Rear View

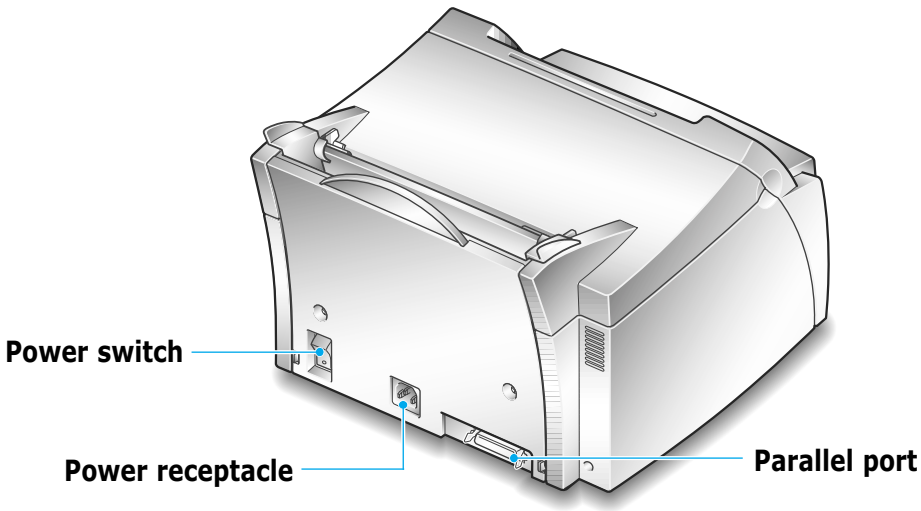

chapter 2

Setting Up Your Printer

This chapter provides step by step information on setting up your printer. Topics included in this chapter are:

- ***STEP 1***: Unpack Your Printer
- ***STEP 2***: Install the Toner Cartridge
- ***STEP 3***: Load Paper
- ***STEP 4***: Connect to the Computer with a Parallel Cable
- ***STEP 5***: Turn on the Printer
- ***STEP 6***: Print a Demo Page!
- ***STEP 7***: Install the Printer Software

STEP 1

Unpack Your Printer

1 Remove the printer and all accessories from the packing carton. Make sure that your printer has been packed with the following items:

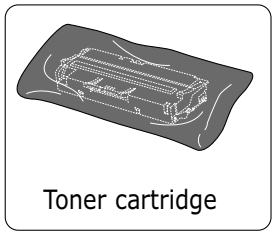
Toner cartridge

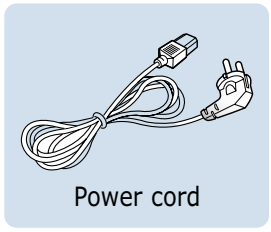
Power cord

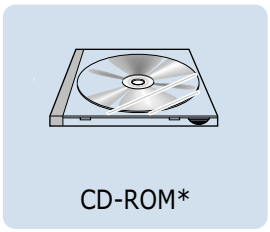
CD-ROM*

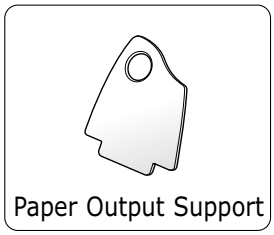
Paper Output Support

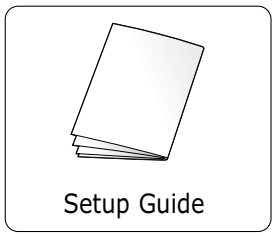
Setup Guide

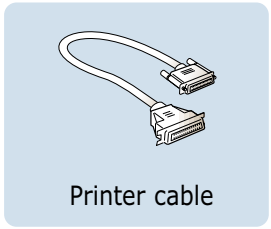
Printer cable

Notes:

- If any items are missing or damaged, notify your dealer immediately.
- **Components may differ from one country to another.**
- The CD-ROM contains the printer driver, the User's Guide, the Adobe Acrobat Reader program and the Make Your Own Diskette setup software.

2 Carefully remove all packing tapes from the printer.

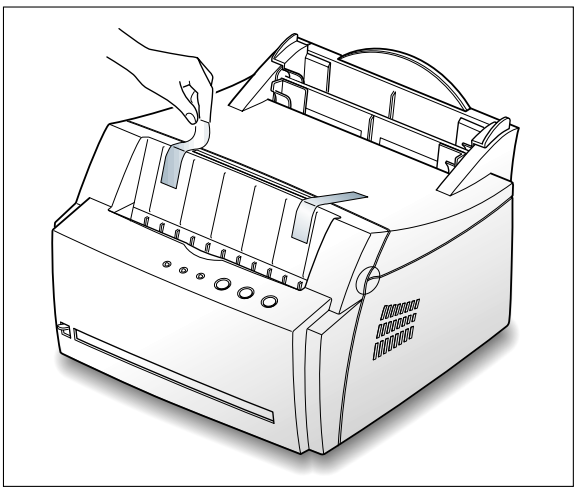

3 Attach the supplied paper output support as shown.

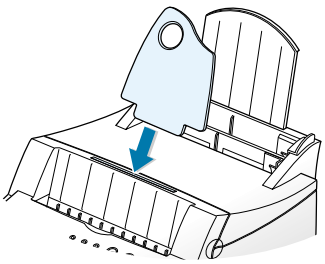

STEP 2

Install the Toner Cartridge

1 Grasp the front cover by both sides of the cover and pull it toward you to open.

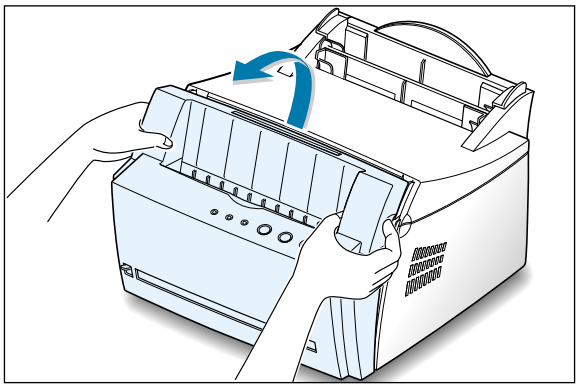

2 Remove the toner cartridge from its bag and remove the paper covering the toner cartridge completely out of the cartridge. Discard the paper.

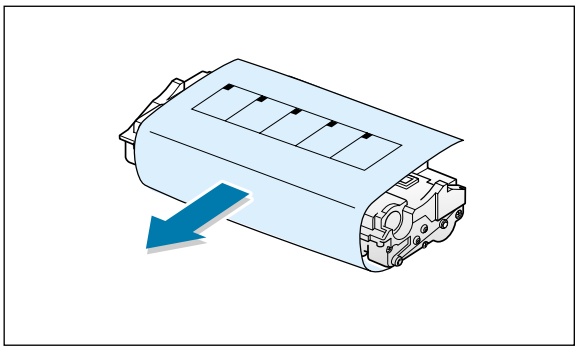

3 Gently shake the cartridge from side to side to distribute the toner evenly inside the cartridge.

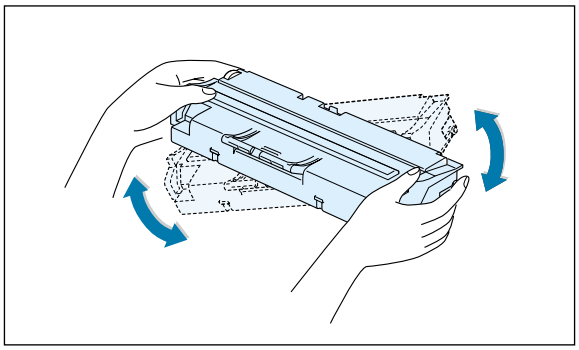

CAUTION:
To prevent damage, do not expose the toner cartridge to light for more than a few minutes. Cover it with a piece of paper, if left exposed for more than a few minutes.

If toner gets on your clothing, wipe it off with a dry cloth and wash clothing in cold water. **Hot water sets toner into fabric.**

4 Locate the cartridge slots inside the printer, one on each side.

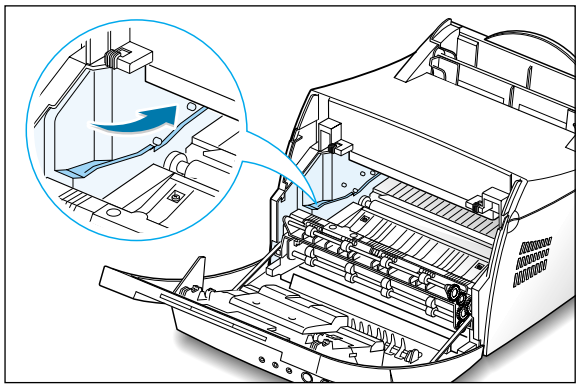

5 Grasp the handle and insert the cartridge in the printer until it snaps into place.

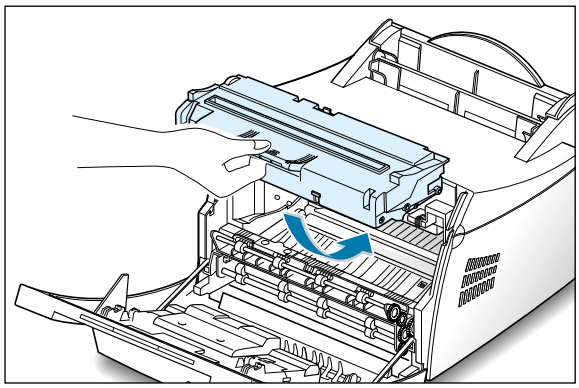

6 Close the front cover. Make sure that the cover is securely closed.

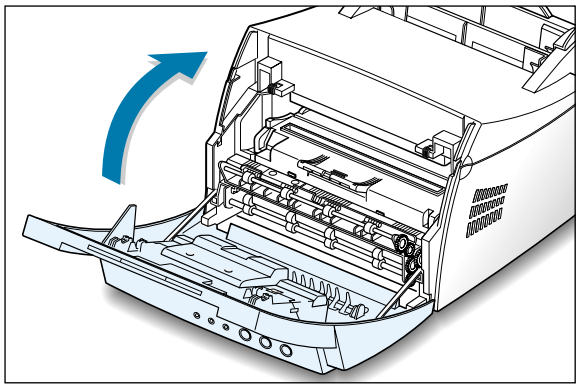

Note: When printing text at 5% coverage, you can expect a toner cartridge life of approximately 2,500 pages (1,000 pages for the toner cartridge that is shipped with the printer).

STEP 3 Load Paper

1 Pull the paper support on the automatic input tray up, until it stops.

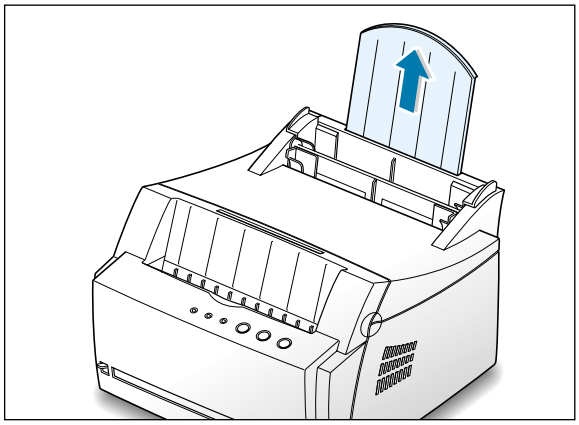

2 Before loading the paper, flex the sheets back and forth to loosen them, then fan them.

Tap the edges of the stack on a table top to straighten them to prevent paper jams.

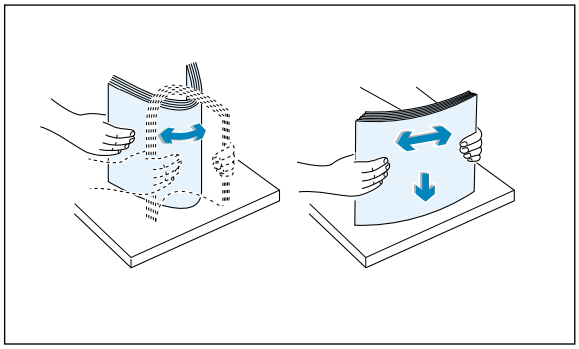

3 Load a stack of paper into the automatic input tray **with the print side facing up**.

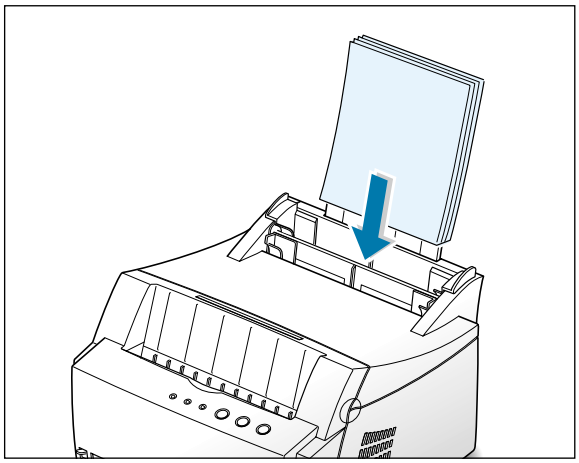

4 Do not load too much. This tray holds up to 150 sheets.

Keep the paper below this height mark.

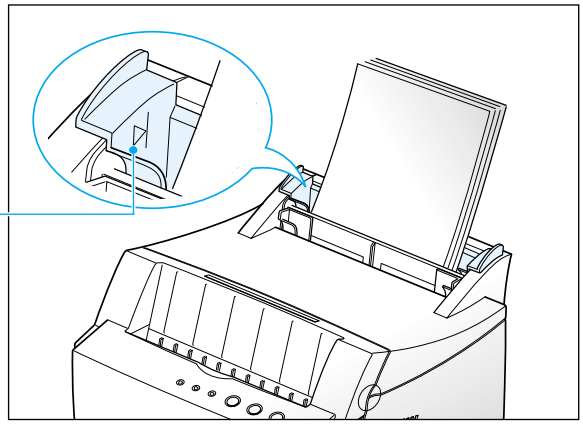

5 Adjust the paper guides to the width of the paper stack.

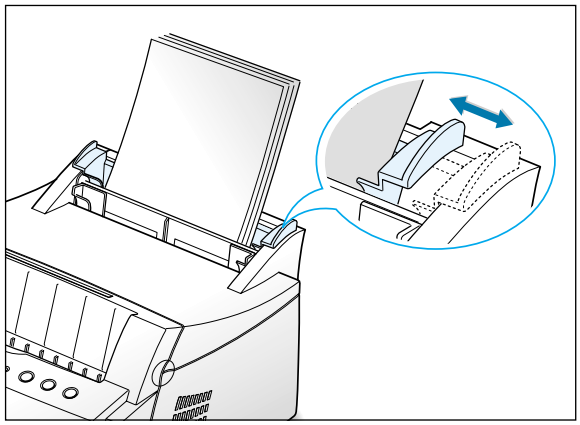

Notes:

- Do not push the width guide far enough to cause the media to warp.
- If you do not adjust the width guide, it may cause paper jam.

STEP 4 Connect to the Computer with a Parallel Cable

1 Make sure both the printer and the computer are turned off.

2 Plug the parallel printer cable into the connector on the back of the printer.

Push the metal clips down to fit inside the notches on the cable plug.

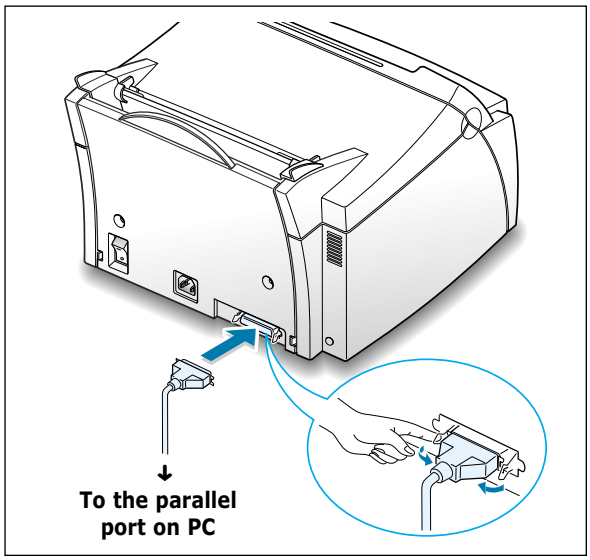

3 Connect the other end of the cable to the parallel interface port on your computer, and tighten the screws.

See your computer documentation if you need help.

STEP 5 Turn on the Printer

1 Plug the power cord into the power receptacle on the back of the printer.

2 Plug the other end into a properly grounded AC outlet.

3 Turn on the power.

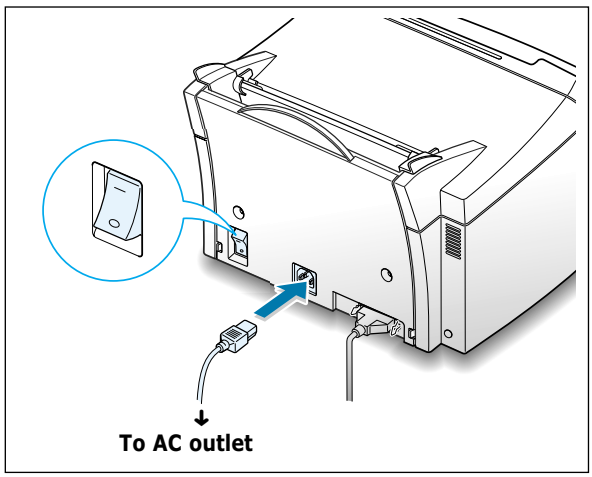

STEP 6

Print a Demo Page!

As the printer powers up, all the printer control panel lights turn on briefly. When only the **Data** light remains on, press and hold the **Dem**o button.

Hold down the button for about 2 seconds until all lights blink slowly, then release, the demo page will print.

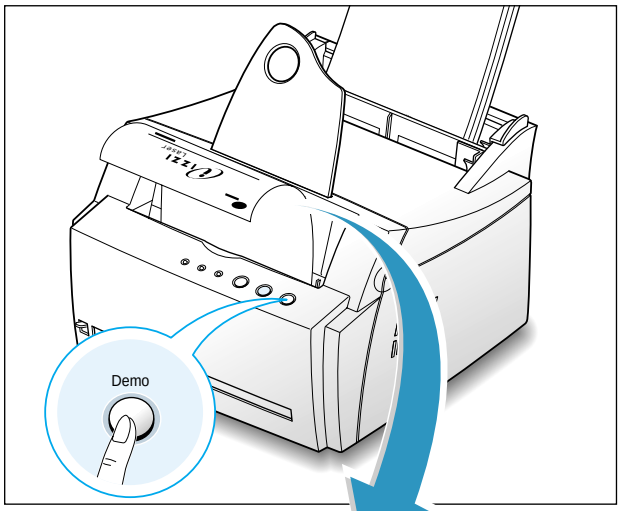

The demo page provides a sample of the print quality and help you verify the printer is printing correctly.

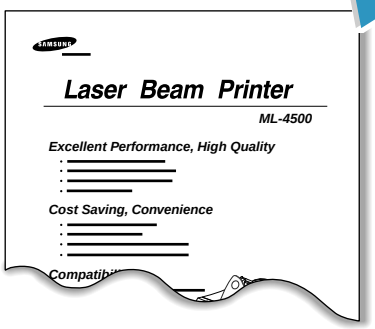

STEP 7

Install the Printer Software

Included with your printer is a CD-ROM containing the printer driver for some of the most popular Windows software applications. To operate your printer, you must install a printer driver, which translates data from your application into data that the printer understands.

Before Installing the Printer Software

Verify the following:

- At least **16 MB or more of RAM** is installed on your PC.
- There is at least **50 MB of free disk space** on your PC.
- **All applications are closed on your PC before beginning installation**.
- Windows 95, Windows 98, Windows 2000 or Windows NT 4.0.

Installing the Printer Software from the CD-ROM

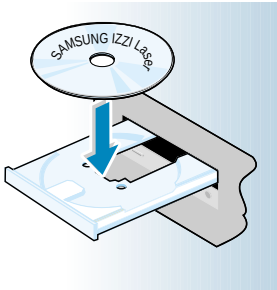

Note: If the New Hardware Found box appears during the installation procedure, click the [x] in the upper right corner of the box, or click **Cancel**.

1 Place the CD-ROM in the CD-ROM drive. Install will start automatically.

If the CD-ROM drive does not automatically run:

Select **Run** from the **Start** menu, and type **x:\cdsetup.exe** in the Open box (where **x** is the drive letter for the CD-ROM drive), then click **OK**.

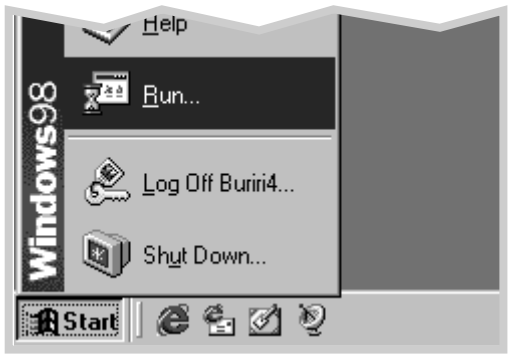

2 When the opening screen appears, select the appropriate language.

3 Click **Install the Samsung Software on your PC**.

4 The Welcome window opens. Click **Next**.

5 The files are copied into the appropriate directory.

6 Click **Finish**.

Software Installation Tips

I do not have a CD-ROM drive

If you have access to another computer with a CD-ROM drive, you can use Make diskette utility in Windows to create the disks you need for the installation. Go to "Installing Software from Diskette" on page A.10.

How do I access printer features ?

Some printer features, such as paper size and page orientation, may be available through your application settings. Use application settings, if available, because they override printer driver settings.

Access advanced printer features through your printer driver. See the chapter 5, "Printing Tasks" for instructions on using your printer driver features.

How do I remove the printing software ?

In Windows, after installation, the Uninstall icon in the Samsung ML-4500 program group allows you to select and remove any or all of the Samsung ML-4500 printing system components. If you are upgrading the printer driver, or if your installation fails, uninstall the driver doing as the following instructions.

1. From the **Start** menu, select **Programs**.
2. Select **Samsung ML-4500**, and then **Samsung ML-4500 Driver Uninstall**.

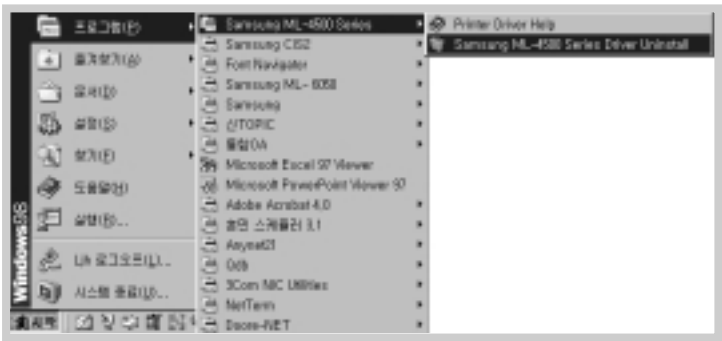

3 When your computer confirms your selection, click **Yes**.

4 The Samsung ML-4500 printer driver and all of its components are removed from your computer.

5 Click **OK**.

If you have problems installing

- Exit your software programs. Then turn off the computer and the printer. Turn on the printer, then turn on the computer.
- Close any virus protection programs that are running on your computer.
- Uninstall the printer software using the instruction above, then repeat the installation procedure.

Can I use this printer in the other OS?

The Samsung ML-4500 Printer supports the Linux system. Go to "Linux Driver Installation" on page A.13 for information on installing the Linux driver.

chapter 3

Using Control Panel

This chapter describes how to use the printer's control panel. It provides information on the following topics:

- Control Panel Buttons
- Control Panel Lights

Control Panel Buttons

The printer has three buttons: **Toner Save**, **Cancel/Reprint** and **Demo**.

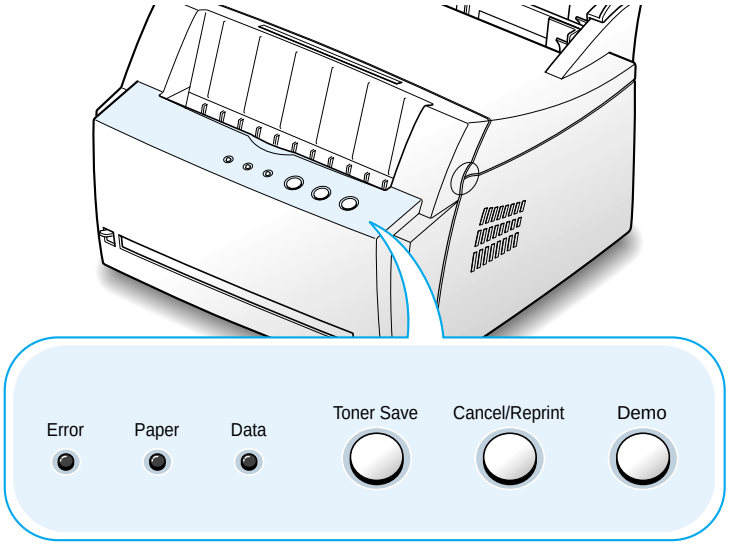

Print demo page

Press and hold **Demo** for about 2 seconds until the control panel lights blink slowly to print a demo page. The printer must be in the Ready mode.

Start manual feeding

When you select **Manual** for **Paper Source** from your software application, you should press **Demo** each time you load a sheet of paper manually. For further information, see "Using the Manual Input tray" on page 4.5.

Clean the inside of the printer

Press and hold **Demo** for about 10 seconds until the control panel lights remain lit. After cleaning the printer, one cleaning sheet prints. For further information, see page 6.5.

Cancel/Reprint

Cancel job

Press **Cancel/Reprint** and hold until the control panel lights blink to cancel a job the printer is currently printing. The **Error** light will blink while the print job is cleared from both the printer and the computer, and then return to the Ready mode. This may take some time, depending on the size of the print job.

Note: If the **Cancel/Reprint** button is accidentally pushed, the job must be reprinted. There is no undo function.

Reprint last page of the job

If you press **Cancel/Reprint** in the Ready mode, the printer prints the last page of the last print job. See page 5.12.

Toner Save

(on)

Toner Save

(off)

Turn the Toner Save Mode on/off

Press **Toner Save** to turn the Toner save mode on or off. The printer must be in the Ready mode.

- If the button backlight is on, toner save mode activates and the printer uses less toner to print a document.
- If the button backlight is off, toner save mode is disabled and you will print in normal quality.

To enable or disable the Toner Save mode using this button, the **Toner Save Mode** option in the printer driver must be set to **Printer Setting**.

For further information on the Toner Save mode, see page 5.8.

Control Panel Lights

The control panel lights indicate the status of your printer. If the **Error** light is on, the printer is experiencing an error. See "Troubleshooting Error Messages" on page 7.17.

Control Panel Light Message

Error Paper Data

Ready mode

The **Data** light is on and the printer is ready to print.

No action is needed. If you press and hold the **Demo** button for about 2 seconds, a demo page will print.

Error Paper Data

Processing

The printer is receiving or processing data. Wait for the job to print.

Pressing the **Cancel/Reprint** button cancels the current job. One or two pages may print as the printer clears the print job. The printer will return to the Ready mode after the job has been canceled.

Error Paper Data

Paper out

The printer is out of paper.

Load paper into the printer. For the automatic tray, there is no need to press any button to reset. For the manual tray, press the **Demo** button after loading.

Error Paper Data

Waiting the Demo button to be pressed

In the Manual Feed mode, the printer is waiting the **Demo** button to be pressed.

Press the **Demo** button to start printing. You must press the button to print each page after loading paper into the manual input tray.

chapter 4

Print Media

This chapter will help you understand what kind of paper you can use with the Samsung ML-4500 printer and how to properly load paper in the different paper input trays for the best print quality.

Topics included in this chapter are:

- ♦ Choosing Paper and Other Media
- ♦ Selecting Output Location
- ♦ Loading Paper
- ♦ Printing on Envelopes
- ♦ Printing on Heavy Paper
- ♦ Printing on Labels
- ♦ Printing on Transparencies
- ♦ Printing on Preprinted Paper
- ♦ Printing on Card Stocks

Choosing Paper and Other Media

You can print on a variety of print media, such as plain paper, envelopes, labels, transparencies, card stocks and so on. See "Paper Specification" on page A.2. To get the best possible print quality, use only high-quality copier-grade paper.

When you choose print media, consider the followings:

- **Desired outcome**: The paper you choose should be appropriate for the project.
- **Size**: You can use any size paper that fits easily within the paper adjusters of the paper tray.
- **Weight** : Your printer supports paper weight as follows:
  - 16~24 lbs bond for the automatic input tray
  - 16~43 lbs bond for the manual input tray
- **Brightness**: Some papers are whiter than others and produce sharper, more vibrant images.
- **Surface smoothness**: The smoothness of the paper affects how crisp the printing looks on the paper.

Always test a sample of paper before purchasing large quantities.

CAUTION**:** Using media that does not confirm to the specification listed in the paper specification can cause problems that may require service. This service is not covered by the warranty or service agreements.

Media Sizes and Capacities

Media Size	Input Source/Capacity*	
	Automatic Input Tray	Manual Input Tray
Plain Paper		
Letter (8.5 x 11 in.)	150	1
Legal (8.5 x 14 in.)	150	1
Executive (7.25 x 10.5 in.)	150	1
A4 (210 x 297 mm)	150	1
A5 (148 x 210 mm)	150	1
Folio (8.5 x 13 in.)	150	1
B5 (182 x 257 mm)	–	1
Envelopes		
No. 10 (4.12 x 9.5 in.)	5	1
DL (110 x 220 mm)	5	1
C5 (162 x 229 mm)	5	1
C6 (114 x 162 mm)	5	1
B5 (176 x 250 mm)	5	1
Monarch (3.87 x 7.5 in.)	5	1
Labels		
Letter (8.5 x 11 in.)	5	1
A4 (210 x 297 mm)	5	1
Transparency films		
Letter (8.5 x 11 in.)	5	1
A4 (210 x 297 mm)	5	1
Card stocks	5	1
Bond	5	1

* Depending on paper thickness, maximum capacity may be reduced.

Paper Guidelines

When selecting or loading paper, envelopes, or other special media, keep these guidelines in your mind:

- Attempting to print on damp, curled, wrinkled, or torn paper can **cause paper jams** and poor print quality.
- **Use** cut-sheet paper **only**. You cannot use multi-part paper.
- **Use only** high-quality, copier grade paper.
- **Do not** use paper that has been already printed on or that has been fed through a photocopier.
- **Do not** use paper with irregularities, such as tabs or staples.
- **Do not** attempt to load any tray during printing and never overfill the tray. This could cause a paper jam.
- **Avoid** paper with embossed lettering, perforations, or texture that is too smooth or too rough.
- Colored paper should be of the same high quality as white photocopy paper. The pigments must withstand the printer's fusing temperature of 400°F (205°C) for 0.1 second without deterioration. **Do not** use paper with a colored coating that was added after the paper was produced.
- Preprinted forms must be printed with nonflammable, heat-resistant inks that do not melt, vaporize, or release hazardous emissions when subject to the printer's approximately 400°F (205°C) fusing temperature for 0.1 second.
- Store paper in its ream wrapper until ready to use. Place cartons on pallets or shelves, not on the floor.
- **Do not** place heavy objects on top of the paper, whether it is packaged or unpackaged.
- **Keep** paper away from moisture, direct sunlight or other conditions that can cause it to wrinkle or curl.

Selecting the Output Location

The printer has two output locations: the **face-up output slot** and the **face-down output tray**. You can select the output location by changing the position of the output lever on the front of the printer. To use the face-down output tray, be sure the output lever is in upper (normal) position. To use the face-up output slot, push it down to open the slot.

- If paper coming out of the face-down output tray has problems, such as excessive curl, **try printing to the face-up output slot**.
- To avoid paper jams, **do not change the position of the output lever** while the printer is printing.

Printing to the Face-Down Output Tray

The face-down output tray collects paper **face-down**, **in correct order**. Make sure that the output lever is in the upper position. (If not, push it up)

The face-down output tray should be used for most print jobs and is recommended for printing over 100 sheets of paper, continuously.

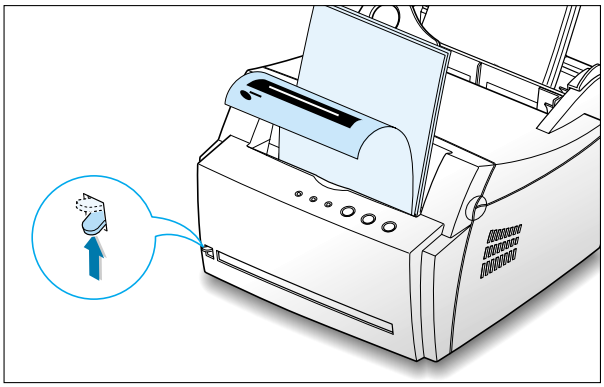

Printing to the Face-Up Output Slot

The printer prints to the face-up output slot if it is open. Push the output lever down to open the slot. Paper comes out of the printer **face-up**.

Using the face-up output slot might improve output quality with the following:

- envelopes
- labels
- paper heavier than 24 lb (90 g/m^2)

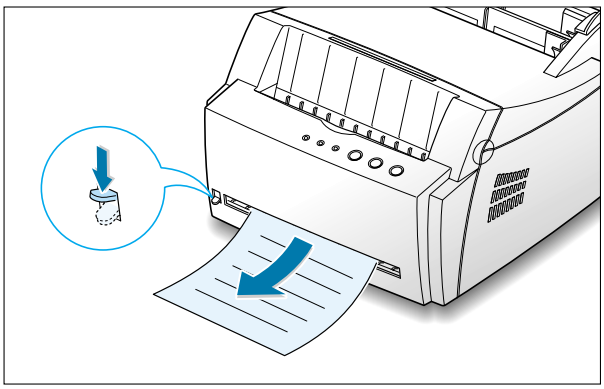

Loading Paper

Proper paper loading helps prevent paper jams and ensure trouble-free printing. **Do not** remove paper from the tray(s) while a job is printing. Doing so may cause a paper jam.

Using the Automatic Input Tray

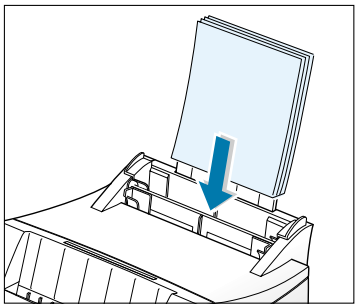

The automatic input tray holds 150 sheets of plain paper and 5 sheets of special media. See "Media Sizes and Capacities" on page 4.2 for acceptable paper size and capacities for each input trays.

Load a stack of paper into the automatic input tray and print. For details on loading paper in the automatic input tray, see "Load Paper" on page 2.4.

Note: Before using the automatic input tray, you must remove paper from the manual input tray.

Using the Manual Input Tray

When you change the print settings, if you select **Manual** in the **Paper Source** option, you can manually load paper in the manual input tray. Manually loading paper can be helpful when you want to check the print quality after each page is printed.

If you experience a paper jam from the automatic input tray, load a sheet of paper at a time into the manual input tray.

Note: To avoid a paper jam, use the manual tray with the automatic input tray loaded with paper.

1 Load the print media in the manual input tray **with the print side up**.

Adjust the paper guide against the stack of print media without bending.

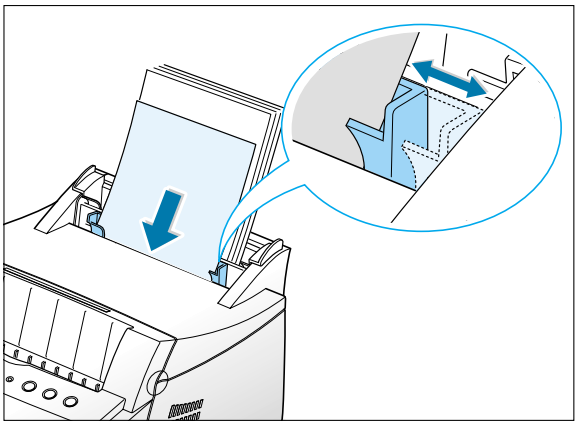

2 Push the output lever down to open the face-up output slot.

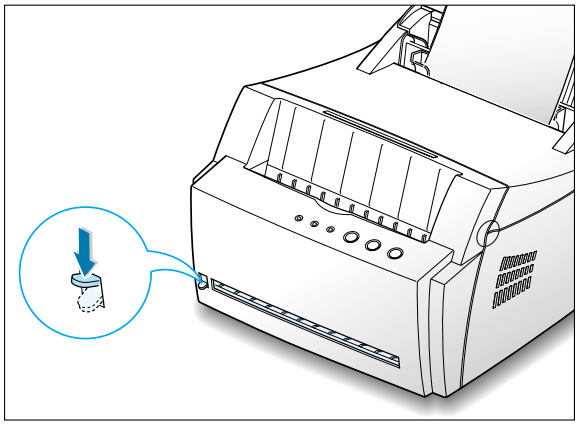

3 When you print a document, you must select **Manual** for **Paper Source** from the software application, and then select the correct paper size and type. For details, see page 5.3.

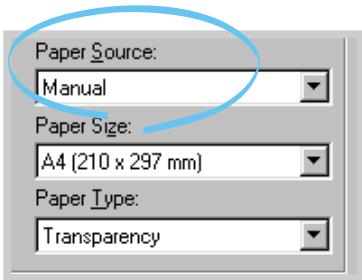

4 Print the document.

5 If you are printing multiple pages, load next sheet after the first page prints out.

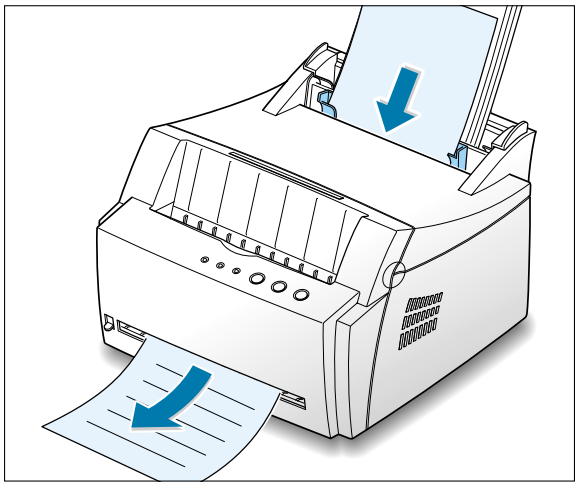

6 Press **Demo** to start feeding.

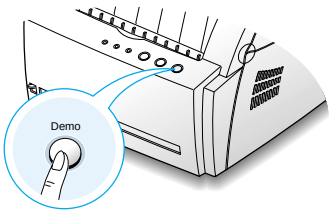

Notes:

- The face-up output slot may not hold the printed pages properly.
- The printed pages will not stack in the face-down output tray unless you change output lever position. After you finish using the face-up output slot, you must change the position of the output lever to the normal position. Push it up.

Printing on Envelopes

Guidelines

- Only use envelopes recommended for laser printers. Before you load envelopes in the input tray, make sure that they are undamaged and are not stuck together.
- Do not feed stamped envelopes.
- Never use envelopes with clasps, snaps, windows, coated lining, or self-stick adhesives. These envelopes may severely damage the printer.

1 Flex or fan the envelopes to supply air through them for loading.

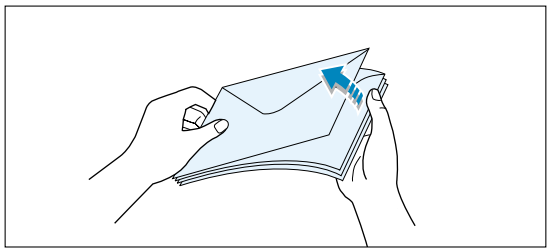

2 Load the envelopes into the input tray you want to use **with the flap side down**.

The stamp area is **on the right side** and the end of the envelope **with the stamp area enters the tray later**.

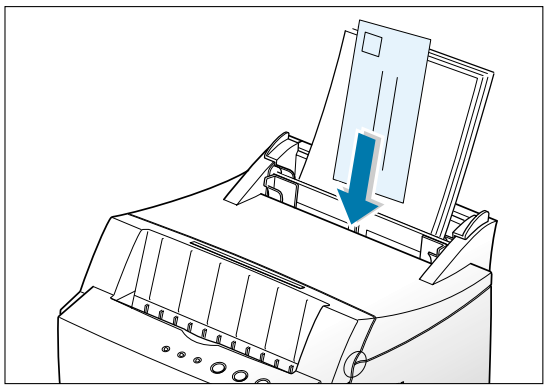

3 Adjust the guide to the edge of the envelope stack.

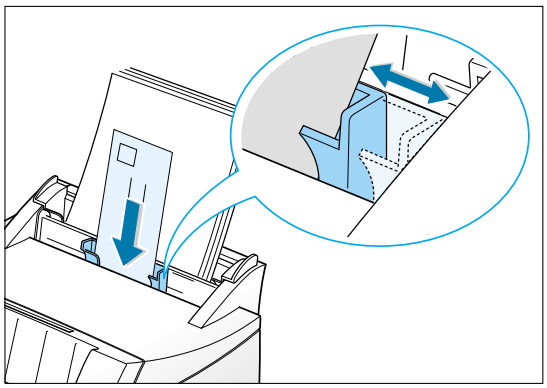

4 Push the output lever down.

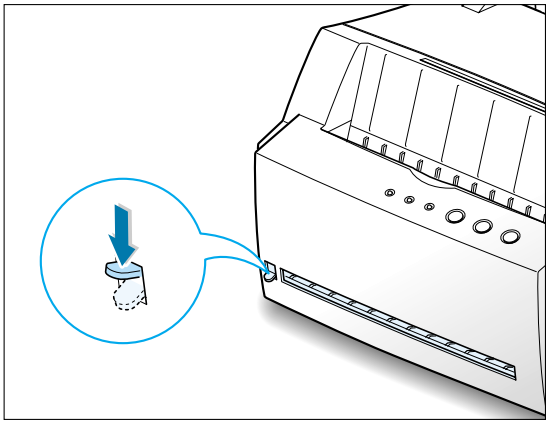

5 When you print on envelopes, configure the paper source, type and size properly in the software application. For details, see page 5.3.

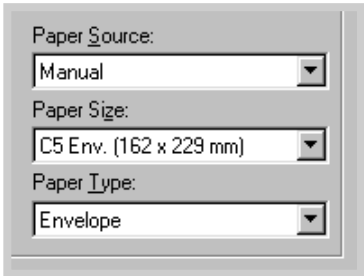

6 Print the document.

7 After printing, push the output lever up.

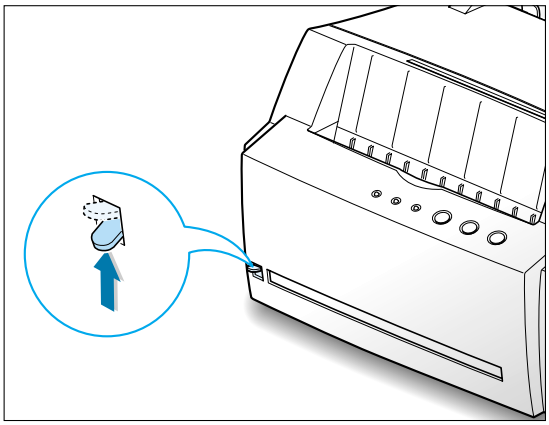

Printing on Heavy Paper

Guidelines

- Heavy paper is any paper heavier than 24 lb (90 g/m^2). For cotton papers, you can use 24 lb paper. The maximum paper weight available for your printer is 43 lb (163g/m^2).
- Do not use extremely heavy paper stock (greater than 43 lb, or 163 g/m^2 bond). Misfeeds, mis-stacking, media jams, poor toner fusing, poor print quality, and excessive mechanical wear can result.

1 Load paper in the input tray you want to use **with print side up**.

Adjust the guide to fit the width of the labels.

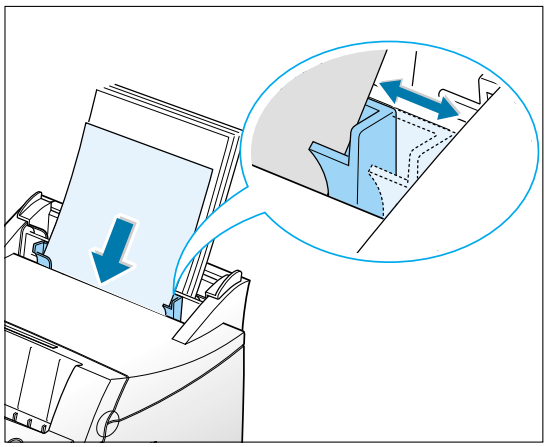

2 Push the output lever down.

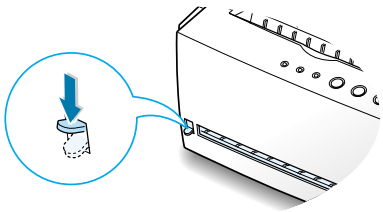

3 When you print on heavy paper, select **Bond** in the Paper Type section, and then configure the paper source, and size in the software application. For details, see page 5.3.

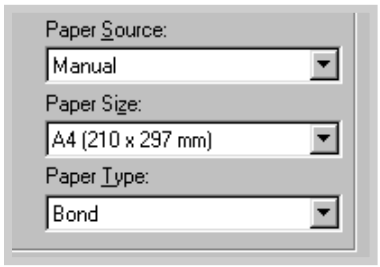

Printing on Labels

Guidelines

- Only use labels recommended for laser printers.
- Verify that the labels' adhesive material can tolerate fusing temperature of 200°C (392°F) for 0.1 second.
- Make sure that there is no exposed adhesive material between the labels. Exposed areas can cause labels to peel off during printing, which can cause paper jams. Exposed adhesive can also cause damage to printer components.
- Do not feed a sheet of labels through the printer more than once. The adhesive backing is designed for one pass through the printer.
- Do not use labels that are separating from the backing sheet or are wrinkled, bubbled, or otherwise damaged.

1 Load labels in the input tray you want to use **with print side up**.

Adjust the guide to fit the width of the labels.

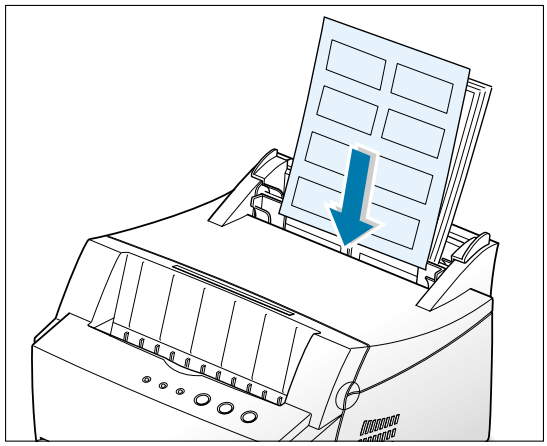

2 Push the output lever down.

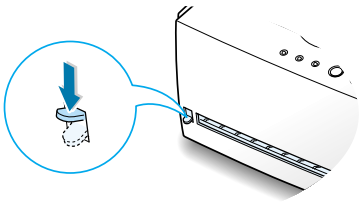

3 When you print on labels, configure the paper source, type and size in the software application. For details, see page 5.3.

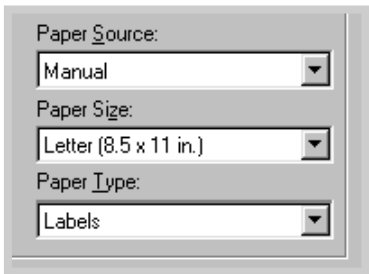

Note: To prevent them from sticking together, do not let the printed label sheets stack up as they are printed out.

Printing on Transparencies

Guidelines

- Only use transparencies recommended for use in laser printers.
- Make sure that the transparencies are not wrinkled or curled, and that they do not have any torn edge.
- Hold the transparencies by the edges and avoid touching the print side. Oils from your fingers that are deposited on the transparency can cause print quality problems.
- Be careful not to scratch or leave fingerprints on the print side.

1 Load transparencies in the input tray you want to use **with print side up**, and **the top with the adhesive strip going first**.

Adjust the guide to fit the width of the transparencies.

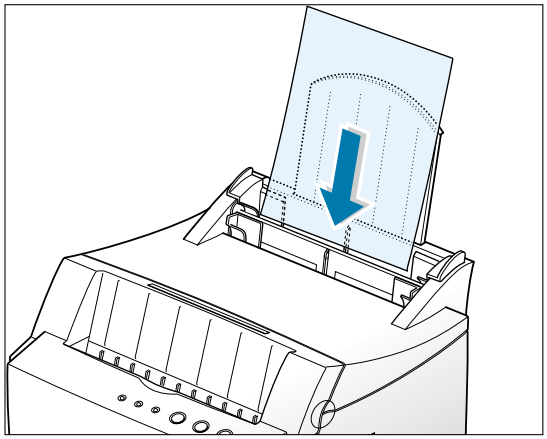

2 Push the output lever down.

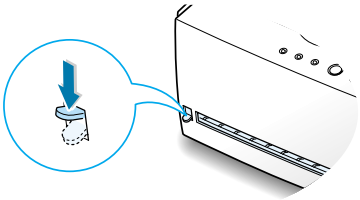

3 When you print on transparencies, configure the paper source, type and size in the software application. For details, see page 5.3.

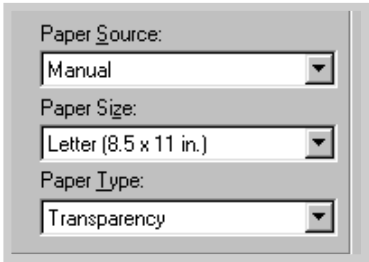

Notes:

- To prevent transparencies from sticking together, do not let the printed sheets stack up as they are printed out.
- Place transparencies on a flat surface after removing them from the printer.

Printing on Preprinted Paper

Preprinted paper is a form with some type of printing on them before they are sent through the printer, such as a letterhead having preprinted logo or text located at the top of the page.

Guidelines

- Letterheads must be printed with heat-resistant ink that will not melt, vaporize, or release hazardous emissions when subjected to the printer's fusing temperature of 400°F (205°C) for 0.1 second.
- Ink on letterhead must be non-flammable and should not adversely affect any printer rollers.
- Forms and letterheads should be sealed in a moisture-proof wrapping to prevent changes during storage.
- Before you load preprinted paper as forms and letterheads, verify that the ink on the paper is dry. During the fusing process, wet ink can come off preprinted paper.

1 Load letter-heads into the input tray you want to use **with the design face up, bottom edge toward the printer**.

Adjust the guide to fit the width of the paper stack.

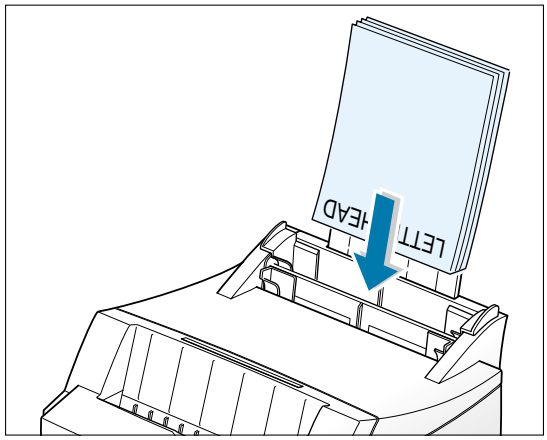

2 When you print on the preprinted paper, configure the paper source, type and size in the software application. For details, see page 5.3.

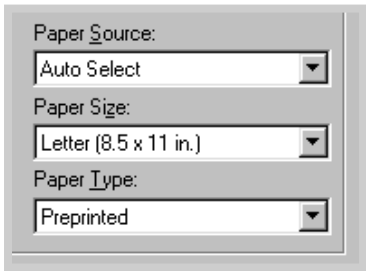

Printing on Card Stocks

Postcards, 3 by 5 in.(index) cards can be printed with the Samsung ML-4500 printer.

Guidelines

- Always insert the short-edge first into the input tray. If you want to print in landscape mode, make this selection through your software. Inserting paper long-edge first may cause a paper jam.
- Do not print on the card stocks that is too small or too large. The minimum size is 76 by 127 mm (3 by 5 in.) for the manual input tray and 95 by 127 mm (3.8 by 5 in.) for the automatic input tray, and the maximum size is 216 by 356 mm (8.5 by 14 in.).
- Set margins at least 6.4 mm (0.25 in.) away from the edges of the media in the software application.

1 Load print media in the input tray you want to use **with print side up**, **short edge first** .

Adjust the guide to fit the width of the media.

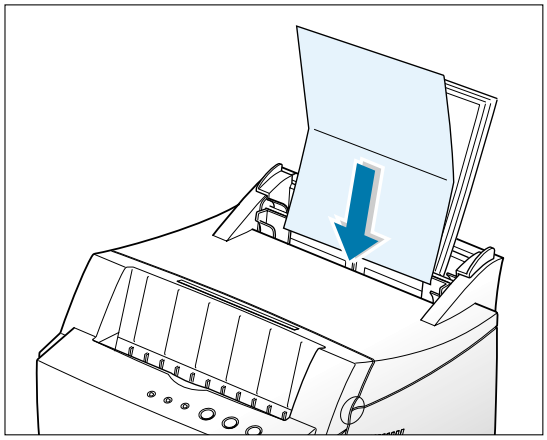

2 Push the output lever down.

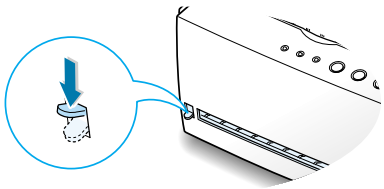

3 Configure the paper source, type in the printer driver's properties (see page 5.3) and print.

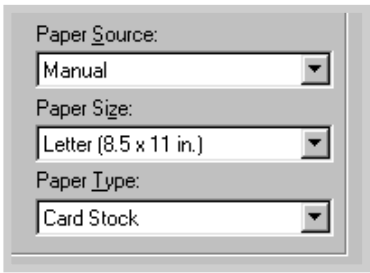

chapter 5

Printing Tasks

This chapter explains your printing options and give common printing tasks.

Topics included in this chapter are:

- Printing a Document
- Printing Multiple Pages on One Sheet of Paper (N-Up Printing)
- Setting Print Resolution
- Using Toner Save Mode
- Using Power Save Mode
- Setting Other Graphic Options
- Reprinting the Last Page
- Printing on a Network Environment

Printing a Document

The following procedure describes the steps required for printing from various Windows applications. The exact steps for printing a document may vary depending on the application program. Refer to your software application's documentation for the exact printing procedure.

1 Open the document you want to print.

2 Select **Print** from the **File** menu. The Print dialog box for your application will be displayed (the Print dialog box for your application may look slightly different).

The basic print settings you required are usually selected within this Print dialog box. These settings include the number of copies, paper size, and page orientation.

If you see a **Properties** button, click it.If you see **Setup**, **Printer**, or **Options**, click that button instead; then click **Properties** in the next screen.

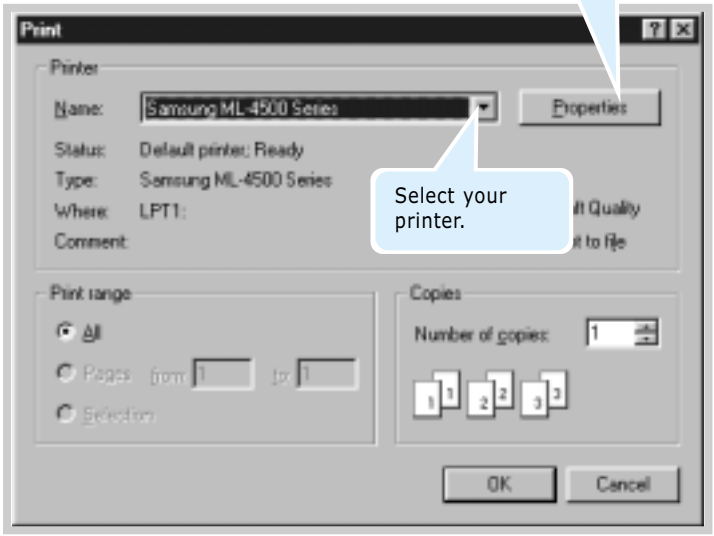

5

3 To take advantage of the printer features provided by your ML-4500 printer, click **Properties** in the application's Print dialog box and go to step 4.

If you see **Setup**, **Printer**, or **Options**, click that button instead. Then click **Properties** in the next screen.

4 The Samsung ML-4500 Properties dialog box allows you to access all the information necessary when using your printer.

If necessary, click the **Basic** tab to display the settings shown below. The **Basic** tab contains the options for setting the basic paper handling.

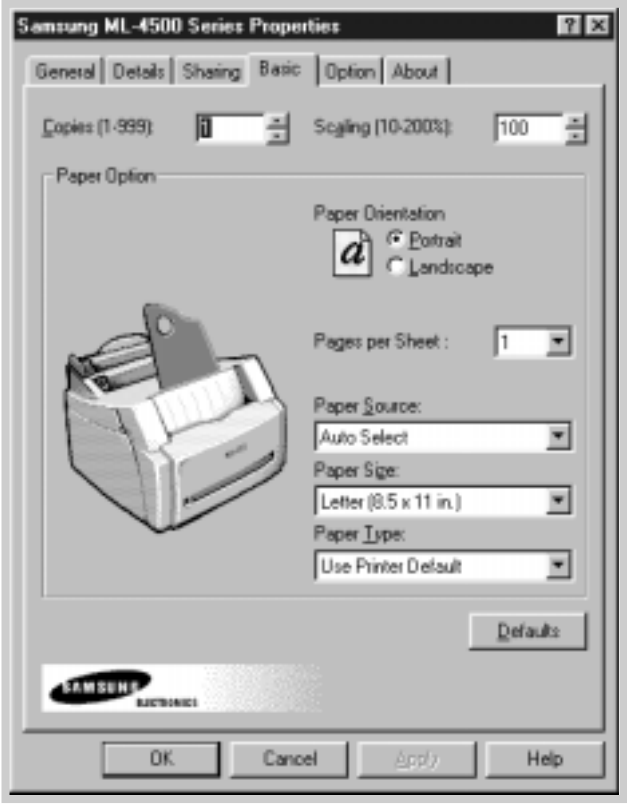

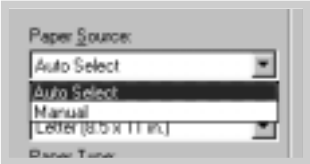

Make sure the **Paper Source** is set to **Auto Select**. If the paper source is set to **Auto Select**, the printer automatically selects the print media according to the following order: the manual input tray, the automatic input tray. **Manual** source is used when printing to special media. You have to feed one sheet at a time into the printer. See page 4.5.

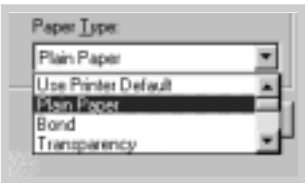

Make sure the **Paper Type** is set to **Plain Paper**. If you load a different type of print media, select the corresponding paper type. For further information on print media, refer to the chapter 4 'Print Media'.

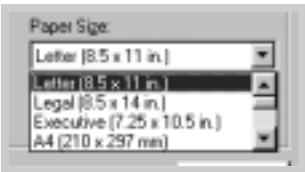

Select the paper size you have loaded in your printer.

The **Paper Orientation** option allows you to select the direction in which information is printed on a page. **Portrait** prints across the width of the page, letter style. **Landscape** prints across the length of the page, spreadsheet style.

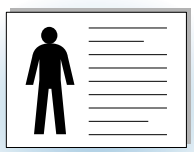

Landscape

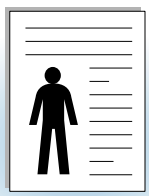

Portrait

4 Click the other tabs on the top of the Properties dialog box to access other features, if needed.

5 When you complete the print settings, click **OK** until the Print dialog box is displayed.

6 Click **OK** to start printing.

Notes:

- Most Windows applications will override settings you specify in the printer driver. Change all print settings available in the software application first, and any remaining settings with the printer driver.
- The settings you change remain in effect only while you are using the current program. **To make your changes permanent**, make them in the Printers folder as follows:

1. Click the Windows **Start** button.
2. Select **Settings**, then **Printers** to open the Printers window.

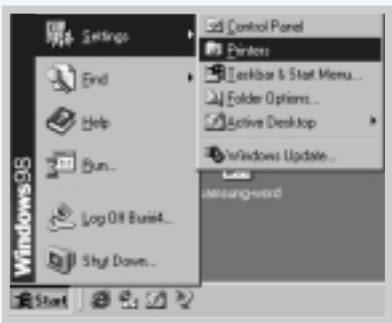

3. Select the **Samsung ML-4500** printer icon.
4. Click the right mouse button and select **Properties** to open the properties window.

Canceling a Print Job

There are two ways to cancel print job.

To stop a print job from your printer

Press the **Cancel/Reprint** button on the control panel.

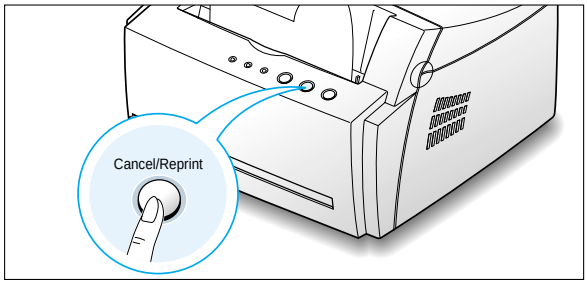

The printer will finish printing the page that is moving through the printer and delete the rest of the print job with the **Error** light blinking. Pressing **Cancel/Reprint** cancels only the current job in the printer. If more than one print job is in printer memory, **Cancel/Reprint** must be pressed once for each job.

To stop a print job from the Printers folder

1. From the **Start** menu, select **Settings**.
2. Select **Printers** to open the Printers window, then double-click the **Samsung ML-4500** printer icon.
3. From the **Document** menu, select **Cancel Printing** (Windows 9x) or **Cancel** (Windows NT 4.0/2000).

Using Help

The Samsung ML-4500 printer has a help screen that can be activated by the **Help** button in the printer's properties dialog box. You can also click ? from the upper right hand corner, then click on any setting.

These help screens give a detailed information about the printer features provided by the Samsung ML-4500 printer driver.

To restore the default printer properties setting when you change the print settings, click **Defaults** in the Samsung ML-4500 Properties dialog box.

Printing Multiple Pages on One Sheet of Paper (N-Up Printing)

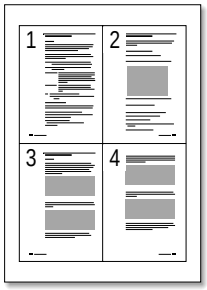

▲ 4 pages per sheet

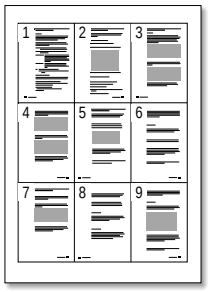

▲ 9 pages per sheet

You can select the number of pages you want to print on a single sheet of paper. If you choose to print more than one page per sheet, the pages will appear decreased in size and arranged on the sheet. You can specify up to 16 pages.

1 When you change the print settings from your software application, access the printer properties. See page 5.1 to access the printer properties.

2 From the **Basic** tab, select the number of pages you want to print per sheet (1, 2, 4, 9 or 16) in the **Pages per Sheet** drop-down list.

Select the paper orientation, source, size and type as needed.

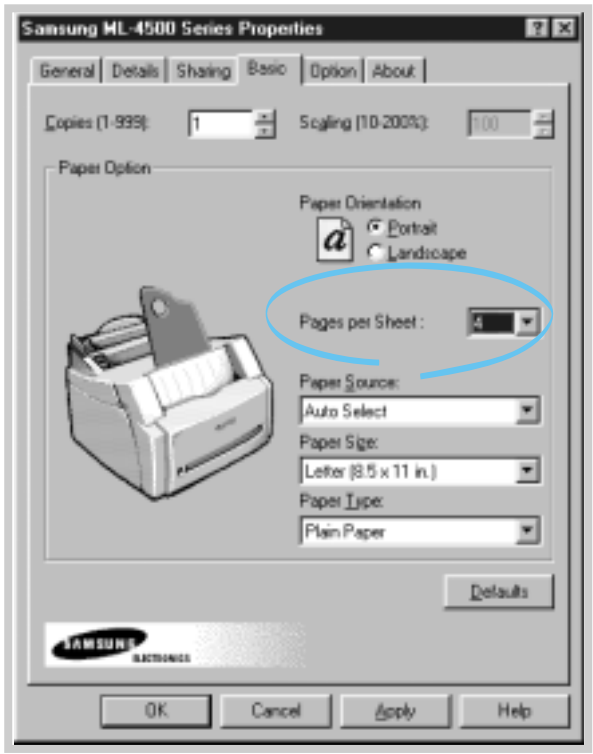

3 Click **OK**, then start printing.

Setting Print Resolution

You can select the print resolution between **600 dpi** and **300 dpi**. The higher the setting, the sharper the clarity of printed characters and graphics. Higher settings may increase the time it takes to print a document.

1 When you change the print settings from your software application, access the printer properties. See page 5.1 to access the printer properties.

2 Click the **Option** tab, and select the desired print resolution from the **Resolution** section.

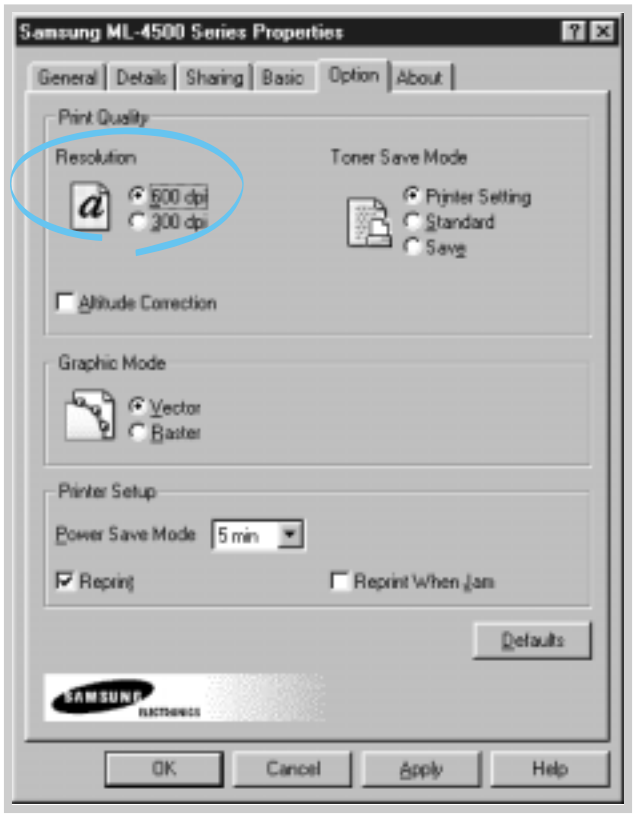

3 Click **OK**, then start printing.

Using Toner Save Mode

Toner Save mode allows the printer to use less toner on each page. Selecting this option will extend the life of your toner cartridge and reduce your cost per page, but will reduce print quality.

There are two ways to enable the Toner Save mode.

To enable this feature from your printer

Press the **Toner Save** button on the control panel. The printer must be in Ready mode (**Data** light is on).

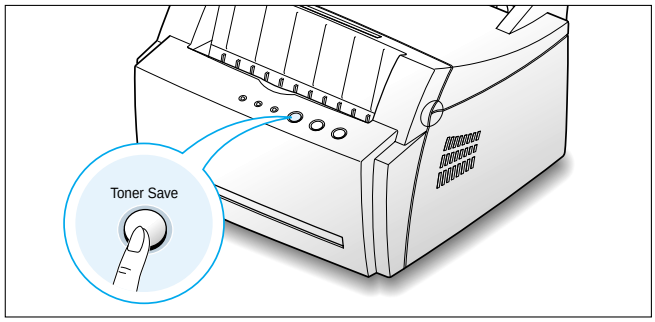

- If the button backlight is on, toner save mode activates and the printer uses less toner to print a page.
- If the button backlight is off, toner save mode is disabled and the printer prints in a normal mode.

Note: To enable or disable the Toner Save mode from the control panel, the **Toner Save Mode** option in the printer driver must be set to **Printer Setting**. See below.

To enable this feature from the software application

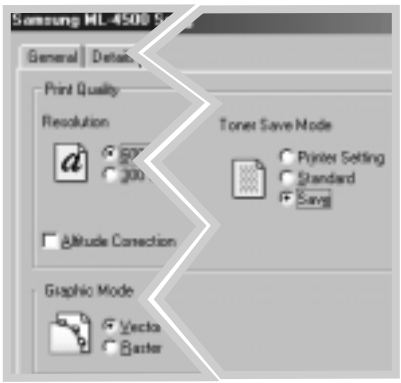

1. When you change the print settings from your software application, access the printer properties. See page 5.1 to access the printer properties.
2. Click the **Option** tab, select the **Toner Save Mode** option. You can select from:
   - **Printer Setting**: If you select this option, this feature is determined by the setting you've made on the control panel of the printer.
   - **Standard**: If you don't need to save toner to print a document, select this option.
   - **Save**: Select this option to allow the printer to use less toner on each page.
3. Click **OK**.

Using Power Save Mode

You can save power consumption when the printer is idle by determining the length of time the printer waits after a job is printed before it goes to a reduced power state.

1 When you change the print settings from your software application, access the printer properties. See page 5.1 to access the printer properties.

2 Click the **Option** tab, and select the desired length of time from the drop-down list in the **Power Save Mode** section.

If your printer is used constantly, select **OFF** which keeps the printer ready to print with the minimum warm-up time. This uses more energy to keep the printer warm and ready to print.

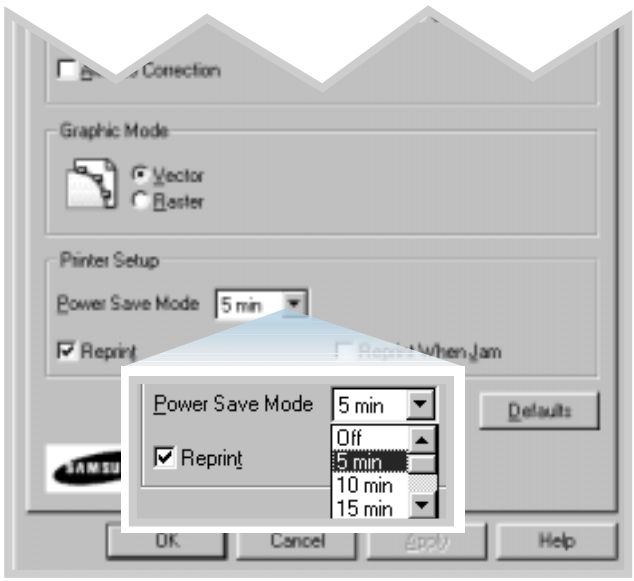

3 Click **OK**.

Using Other Graphic Options

Use the following options to adjust the print quality for your specific printing needs when you access the printer properties. See page 5.1 to access the printer properties.

If necessary, click the **Option** tab to display the settings shown below.

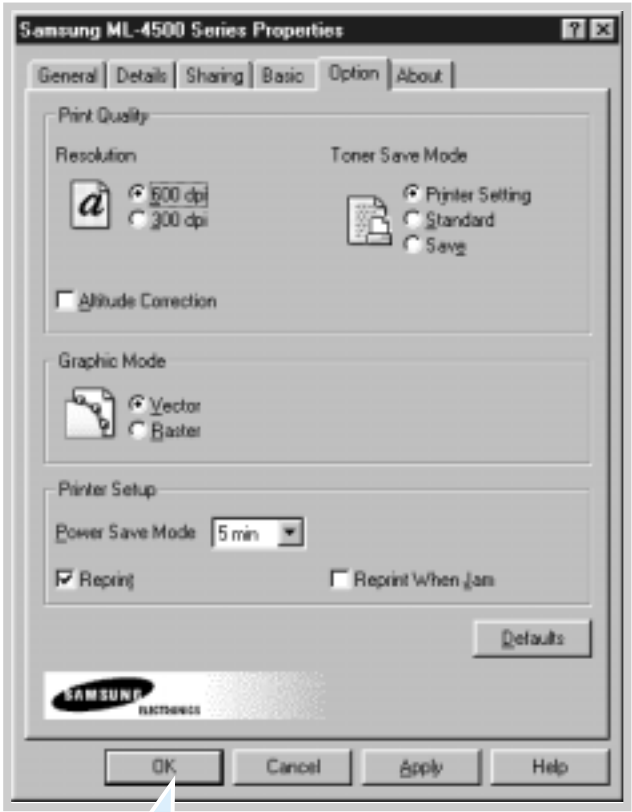

Click here to save the changes when setting is done.

Correcting Print Quality for Altitude

With this option checked, you can optimize the print quality for a low pressure area, such as a high ground.

Setting Graphic Mode

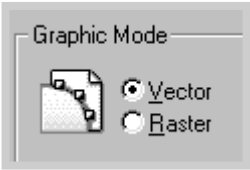

Configure the printer to process graphics as raster or vector images. Setting this option tells Windows how to send graphic image to the printer. All graphics can be printed as raster images, however some geometric shapes or patterns print faster if they are printed as vector graphics.

- **Vector** – If you select the **Vector** setting, Windows will send graphics to the printer as a mixture of vector and raster images.
- **Raster** – When you select the **Raster** setting, Windows will send all graphics to the printer as bit map raster images.

Notes:

- Not all graphic images can print using the **Vector** setting. If you are using the **Vector** setting, and your graphic images do not print as they appear on your computer screen, select the **Raster** setting and reprint your graphic.
- This option does not appear in Windows NT.

Reprinting the Jammed Page

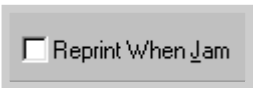

With this option checked, the printer keeps the image for a printed page until the printer signals that the page has successfully exited the printer. If a paper jam occurs, the printer will automatically reprint all jammed page after the jam is cleared.

Reprinting the Last Page

The Samsung ML-4500 printer's memory keeps always the last page of the last job. If you canceled a print job due to a paper jam or other problems and you want to know which page was printed lastly, reprint the last page.

Press **Cancel/Reprint** briefly in Ready mode.

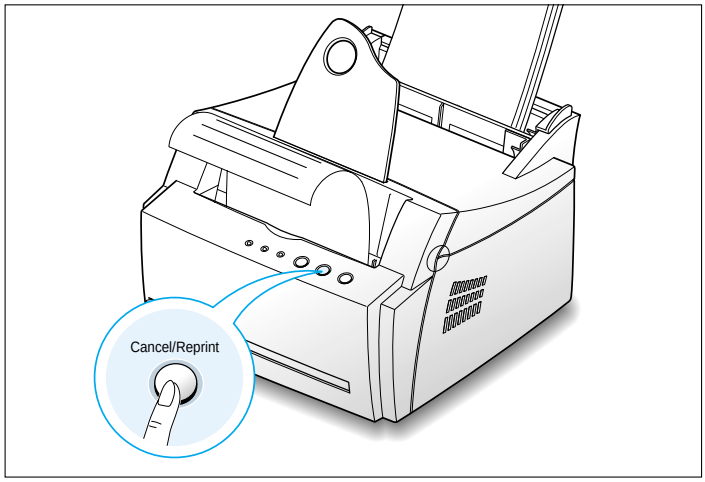

Note: If you want to prevent somebody from reprinting your document, you can turn the Reprinting feature off in the printer's properties dialog box. When you turn the feature off in the printer's properties, the **Cancel/Reprint** button on the control panel does not perform the reprinting operation.

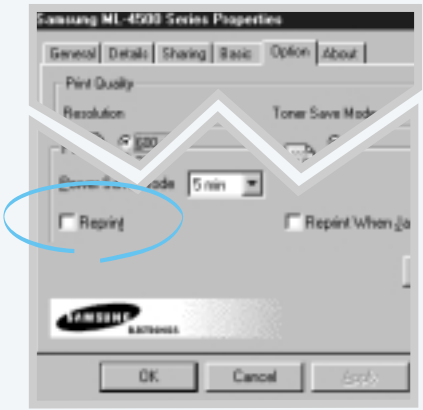

To disable this feature:

1. From the **Start** menu, select **Settings** then **Printers**.
2. Click the right mouse button and select **Properties** to open the properties window.
3. From the **Option** tab, click the **Reprint** to empty the checkbox.

   With the box empty, you cannot reprint the last page from the control panel.

   When you want to reprint the last page on the control panel, you must put a check mark on this check box.
4. Click **OK**.

Printing on a Network Environment

If you work in a network environment, you can connect your ML-4500 printer directly to a selected computer (called the "host computer") on the network. The printer can then be shared by other users on the network through a Windows 9x, 2000 or NT 4.0 network printer connection.

Note: You need to install the Samsung ML-4500 printer driver on each computer that will print documents to the printer.

Setting Up Host Computer

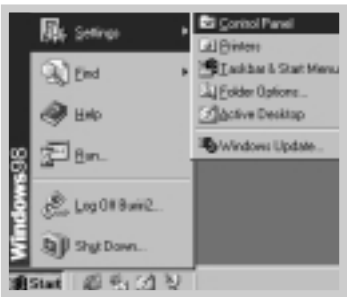

1 Start Windows.

2 From the **Start** menu, select **Control Panel**, and double-click on the **Network** icon.

3 Check the **File and Print Sharing** box, then click **OK**. Close the window.

4 Click **Start** and select **Printers** from **Settings**, then double-click your printer name.

5 Select **Properties** in the **Printers** menu.

6 Click the **Sharing** tab, then check the **Shared As** box. Fill in the Shared Name field, then click **OK**.

Setting Up Client PC

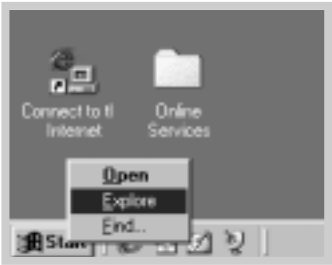

1 Right-click **Start**, and select **Explorer.**

2 Open your network folder in the left column.

3 Right-click the shared name, and select **Capture Printer Port**.

4 Select the port you want, check the **Reconnect at log on** box, then click **OK**.

5 From the **Start** menu, select **Settings**, then **Printers**.

6 Double-click your printer icon.

7 From the **Printers** menu, select **Properties.**

8 Press the **Details** tab, select the printer port, then click **OK**.

chapter 6

Maintaining Your Printer

This chapter provides suggestions for high-quality and economical printing and information for maintaining the toner cartridge and the printer.

Topics included in this chapter are:

- Maintaining Toner Cartridge
- Cleaning the Printer

Maintaining Toner Cartridge

Toner cartridge storage

To get the most from the toner cartridge, keep the following guidelines in your mind.

- Do not remove the toner cartridge from its package until you are ready to use.
- Do not refill toner cartridges. **The printer warranty does not cover damage caused by using a refilled cartridge.**
- Store toner cartridges in the same environment as the printer.
- Do not remove a toner cartridge from the printer except to replace it, clean it or clear a paper jam. Replace the cartridge immediately.
- To prevent damage to the toner cartridge, do not expose it to light for more than a few minute.

Toner cartridge life expectancy

The life of the toner cartridge depends on the amount of the toner that print jobs require. When printing text at 5 % coverage, a new toner cartridge lasts an average of 2,500 pages. (But, the toner cartridge supplied with the printer lasts an average of 1,000 pages.)

Recycling toner cartridge

After you install a new toner cartridge (see page 2.2), follow the instructions included in the toner cartridge box to recycle the old cartridge.

Saving toner

To save toner, press the **Toner Save** button on the printer control panel. The button will be lit. You can also enable the **Toner Save Mode** in your printer properties. Refer to "Using Toner Save Mode" on page 5.8. Selecting this option will expend the life of the toner cartridge and reduce your cost per page, but will reduce print quality.

Redistributing Toner

When toner is low, faded or light areas may appear on a printed page. You may be able to temporarily improve print quality by redistributing the toner. The following procedures may allow you to finish the current print job before replacing the toner cartridge.

1 Grasp the front cover by both sides of the cover and pull it toward you to open.

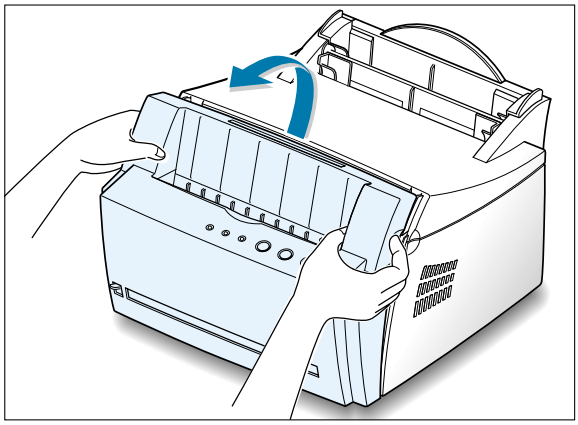

2 Remove the toner cartridge from the printer.

CAUTIONS:

- Avoid reaching too far into the printer. **The fusing area may be hot**.
- To prevent damage to the toner cartridge, **do not expose it to light for** more than a few minute.

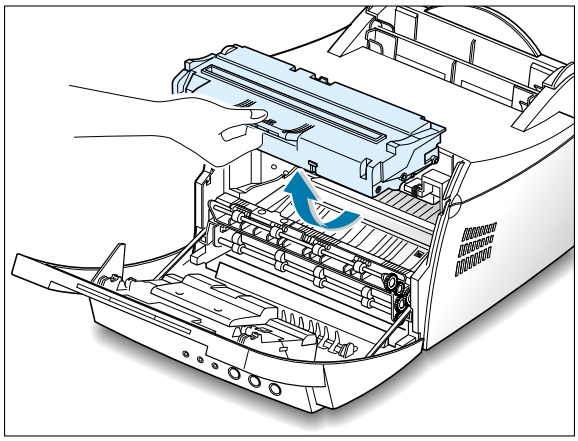

3 Gently shake the toner cartridge from side to side 5 or 6 times to redistribute the toner.

Note: If the toner gets on your clothing, wipe it off with a dry cloth and wash clothing in cold water. **Hot water sets toner into fabric**.

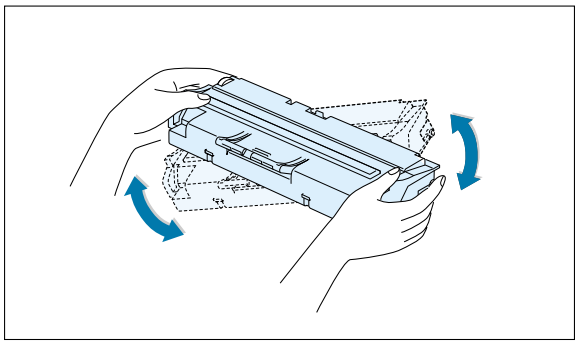

4 Reinsert the toner cartridge into the printer. Be sure that the toner cartridge snaps in its place.

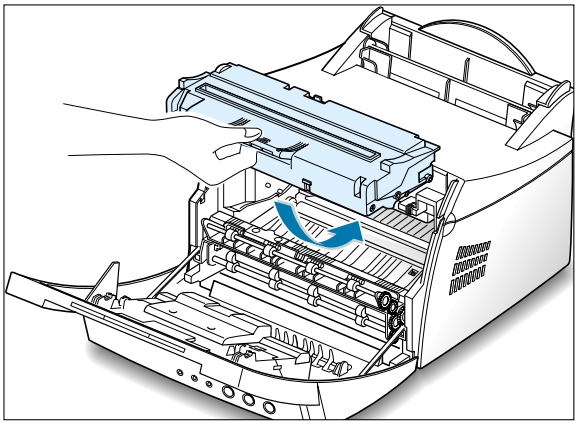

5 Firmly close the cover.

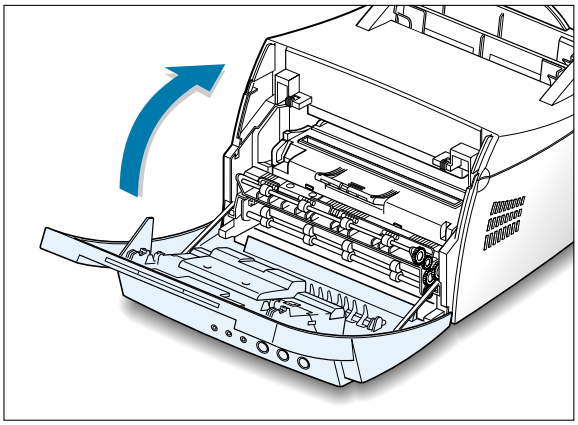

If the print remains light

Remove the old cartridge and install a new toner cartridge. See "Install the Toner Cartridge" on page 2.2.

Cleaning the Printer

To maintain print quality, follow the cleaning procedures below every time the toner cartridge is replaced or whenever print quality problems occur. As much as possible, keep the printer free from dust and debris.

Notes:

- Do not use ammonia-based cleaners or volatile solvents such as thinner, on or around the printer. These can damage the printer.
- While cleaning the inside of the printer, be careful not to touch the transfer roller (located underneath the toner cartridge). The oil from your hands on the roller can cause print quality problems.

Cleaning the Outside

Wipe the outside surface of the printer with a soft, clean, lint-free cloth. You can dampen the cloth slightly with water, but be careful not to be let any water drip onto the printer or inside it.

Cleaning the Inside

During the printing process, paper, toner, and dust particles can accumulate inside the printer. Over time, this buildup can cause print quality problems such as toner specks or smearing. Cleaning inside the printer will eliminate or reduce these problems.

Cleaning inside the printer

1. **Turn the printer off** and unplug the power cord, then wait for the printer to cool.
2. Open the front cover and remove the toner cartridge.
3. With a dry, lint-free cloth, wipe away any dust and spilled toner from the toner cartridge area and the toner cartridge cavity.

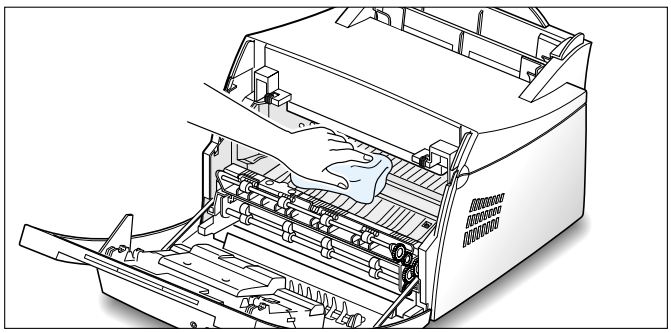

Note: To prevent damage to the toner cartridge, do not expose it to light for more than a few minute. Cover it with a piece of paper, if necessary. Also, do not touch the black transfer roller inside the printer. By doing so, you can damage the printer.

4 Reinsert the toner cartridge and close the cover

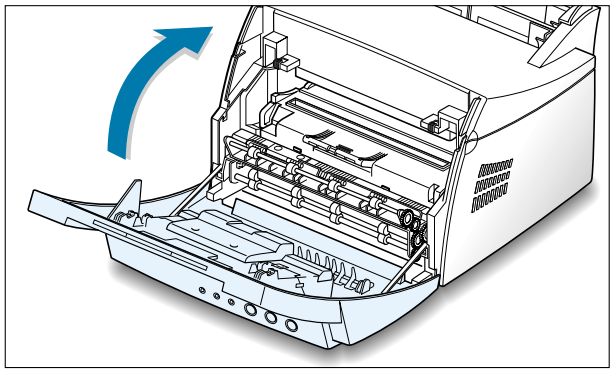

5 Then, plug in the power cord, and turn the printer on.

Printing a cleaning sheet

Printing a cleaning sheet cleans the drum inside the toner cartridge. Use this process if you are experiencing blurred, faded or smeared printouts. This process will produce a page with toner debris, which should be discarded.

1 Make sure the printer is turned on and in the Ready mode and there is paper loaded in the automatic input tray.

2 Press and hold down **Demo** on the control panel for about 10 seconds until all control panel lights remain lit, then release the button.

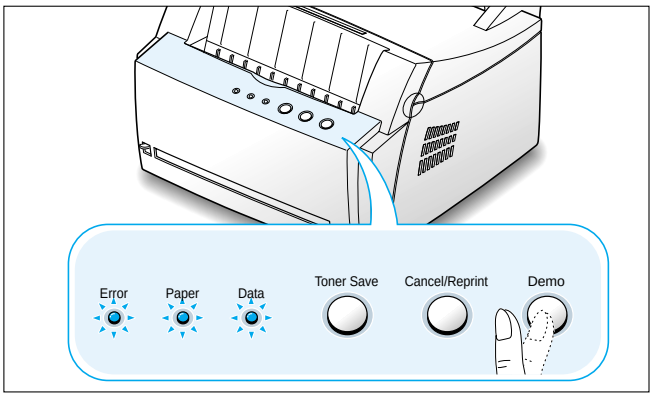

Note: The cartridge cleaning process takes some time. To stop the printing, turn the power off.

3 Your printer automatically picks up a sheet of paper from the tray and prints out a cleaning sheet with the dust or toner particles on it.

chapter 7

Problem Solving

This chapter gives helpful information for what to do if you encounter a printer error. It provides information on the following topics:

- Troubleshooting Checklist
- Solving General Printing Problems
- Clearing Paper Jams
- Solving Print Quality Problems
- Troubleshooting Error Messages
- Common Windows Problems

Troubleshooting Checklist

If the printer is not working properly, complete the following checklist in order. If the printer does not pass a step, follow the corresponding troubleshooting suggestions.

Check	Solution
Make sure that the **Data** light on the control panel is on.	• If no lights are on, check the power cord connection and the power switch. Check the power source by plugging into another outlet. • If other lights are on, go to "Troubleshooting Error Messages" on page 7.17.
Press the **Demo** button to print a demo page to verify that the printer is feeding paper correctly. See page 2.7.	• If a demo page does not print, check the paper supply in the input tray. • If the paper jams in the printer, go to " Clearing Paper Jams" on page 7.6. • If the **Error** indicator light is illuminated on the control panel, go to "Troubleshooting Error Messages" on page 7.17.
Check the demo page to see if it is printed correctly.	If there is a print quality problem, go to "Solving Print Quality Problems" on page 7.11.
Print a short document from a software application to verify the computer and printer are connected and are communicating correctly.	• If the page does not print, check the cable connection between the printer and computer. • Check the print queue or print spooler to see if the printer has been paused. • Check the software application to make sure you are using the proper printer driver and communication port. If the page is interrupted during printing, go to "Solving General Printing Problems" on page 7.2.
If completing the checklist did not diagnose the problem with the printer, check the following troubleshooting sections.	• "Solving General Printing Problems" on page 7.2. • "Troubleshooting Error Messages" on page 7.17. • "Common Windows Problems" on page 7.19.

Solving General Printing Problems

If you have any problems with the operation of your printer, refer to the table for suggested solutions.

Problem	Possible Cause	Solution
The printer does not print.	The printer is not receiving power.	If no lights are on, check the power cord connections. Check the power switch and the power source.
	Your printer is not selected as the default printer.	Select **Samsung ML-4500** as your default printer.
	Check the printer for the following:	• The printer cover is not closed. • Paper is jammed. • No paper is loaded. • Toner cartridge is not installed. • Printer system error occurs. Contact a service representative.
	The printer may be in manual feed mode and out of paper. (The **Paper** light is on.)	Add paper to the manual input tray, and press the **Demo** button on the printer's control panel to start printing.
	The connection cable between the computer and the printer is not connected properly.	Disconnect the printer cable and reconnect it.
	The connection cable between the computer and the printer is defective.	If possible, attach the cable to another computer that is working properly and print a job. You may also try using a different printer cable.
	The port setting is incorrect.	Check the Windows printer setting to make sure that the print job is sent to the correct port (for example, LPT1). If the computer has more than one port, make sure the printer is attached to the correct one.

Problem	Possible Cause	Solution
The printer does not print. (continued)	The printer may be configured incorrectly.	Check the printer properties to make sure that all print settings are correct.
	The printer driver may be incorrectly installed.	Uninstall the printer driver, then reinstall the printer driver. Try printing a demo page.
	The printer is malfunctioning.	Check the lights on the control panel to determine if the printer is indicating a system error.
Printer selects media from the wrong paper source.	The paper source selection in the printer properties may be incorrect.	For many software applications the paper source selection is found under the **Basic** tab within the printer properties. Select the correct paper source.
Paper does not feed into the printer.	Paper has not been loaded correctly.	Remove paper from the input tray and reload it correctly.
	There is too much paper in the input tray.	Remove excess paper from the input tray.
	The paper is too thick.	Use only paper that meets the specifications required by the printer.
Print job is extremely slow.	The job may be very complex. The maximum print speed of the Samsung ML-4500 printer is 8 pages per minute.	Reduce the complexity of the page or try adjusting the print quality settings.
	If using Windows 95, the Spooling Setting may be set incorrectly.	From the **Start** menu, and then choose **Settings** and **Printers**. Right-click the Samsung ML-4500 printer icon, choose **Properties**, click the **Details** tab, and then choose the **Spool Settings** button. Select the desired spool setting from the available choices.

Solving General Printing Problems

Problem	Possible Cause	Solution
Half of the page is blank.	The page layout is too complex.	Simplify the page layout and remove any unnecessary graphics from the document, if possible.
	The page orientation setting may be incorrect.	Change the page orientation in your application.
	The paper size and the paper size settings do not match.	Make sure that the paper size in the print settings matches the paper in the input tray.
The paper keeps jamming.	There is too much paper in the paper tray.	Remove excess paper from the tray. If printing special media, use the manual input tray.
	An incorrect type of paper is being used.	Use only paper that meets the specifications required by the printer.
	An incorrect output method is being used.	Media such as thick paper should not be printed using the face-down output tray. Use the face-up output slot instead.
	There may be debris inside the machine.	Open the front cover and remove the debris.
The printer prints, but the text is wrong, garbled, or incomplete.	The printer cable is loose or defective.	Disconnect the printer cable and reconnect it. Try a print job that you know works. If possible, attach the cable and printer to another computer and try a print job that you know works. Finally, try a new printer cable.
	The wrong printer driver was selected.	Check the application's printer selection menu to make sure that your printer is selected.

Problem	Possible Cause	Solution
The printer prints, but the text is wrong, garbled, or incomplete. (continued)	The software application is malfunctioning.	Try printing a job from another application.
	The operating system is malfunctioning.	If printing from Windows (any version), exit to a Dos prompt and verify functionality with the following command: At a **C:** prompt, type **dir LPT1**, then press **Enter**. (This assumes you are connected to LPT1.) Exit Windows and reboot the computer. Turn the printer off and then back on again.
Pages print, but are totally blank.	The toner cartridge is defective or out of toner.	Replace the toner cartridge.
	The file may have blank pages.	Check the file to make sure that it does not contain blank pages.
	Some parts, such as the controller, the board, may be defective.	Contact a service representative.
The illustrations print wrong in Adobe Illustrator.	The setting in the software application is wrong.	Print the document with the **Bitmap Printing** checkbox in the Print dialog box empty.

Clearing Paper Jams

Occasionally, paper can become jammed during a print job. Some of the causes include:

- The paper tray is loaded improperly or overfilled.
- The paper tray has been pulled out during a print job.
- The top cover has been opened during a print job.
- Paper that does not meet paper specifications has been used. See "Paper Specifications" on page A.2.
- Paper that is outside of the supported size range has been used. See "Paper Specifications".

If a paper jam occurs, the **Paper** and the **Error** lights remain lit on the control panel. Find and remove the jammed paper. If the location of the paper jam is not obvious, look first inside the printer.

Output Area

Note: Paper jams in this area may result in loose toner on the page. If you get any toner on your clothes, wash them in cold water because hot water will set the toner into the fabric.

1 Pull the jammed paper carefully out of the output stacker.

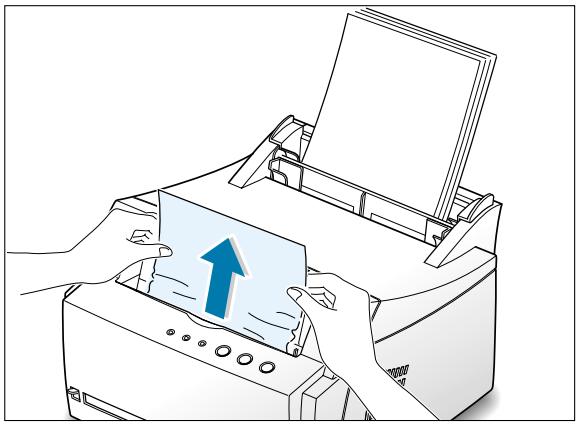

If paper is jammed in the face-up output slot, carefully remove the paper as shown.

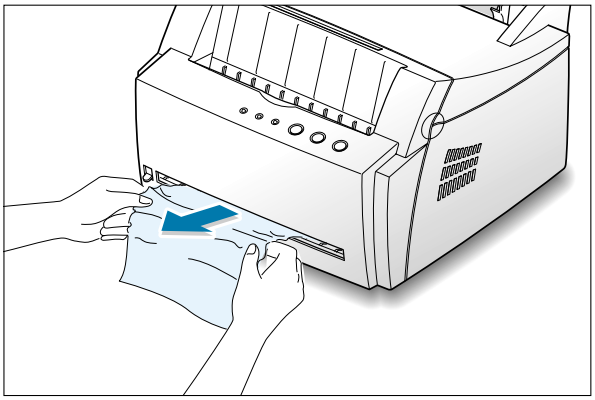

5 Open and close the front cover. Printing can be resumed.

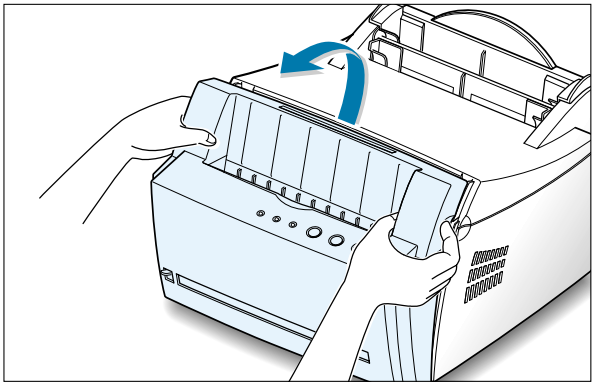

Input Area

Note: If paper has entered the toner cartridge area, follow the instructions on page 7.8. It is easier to remove such jams from the inside of the printer than the paper input area.

1 Carefully pull the jammed paper out of the input tray.

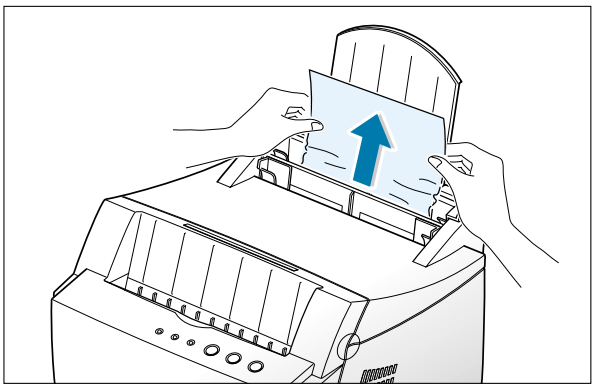

2 Open and close the front cover to resume printing.

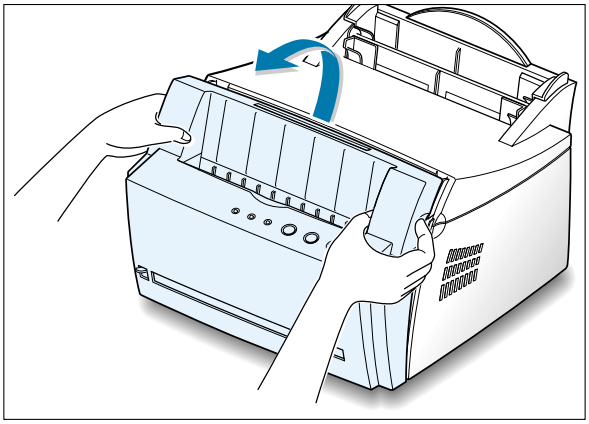

Note: If the **Paper** and the **Error** lights do not turn off, there is still jammed paper inside the printer. Check the inside of the printer.

Inside the Printer

Note: Paper jams in this area may result in loose toner on the page. If you get any toner on your clothes, wash them in cold water because hot water will set the toner into the fabric.

1 Grasp the front cover by both sides of the cover and pull it toward you to open.

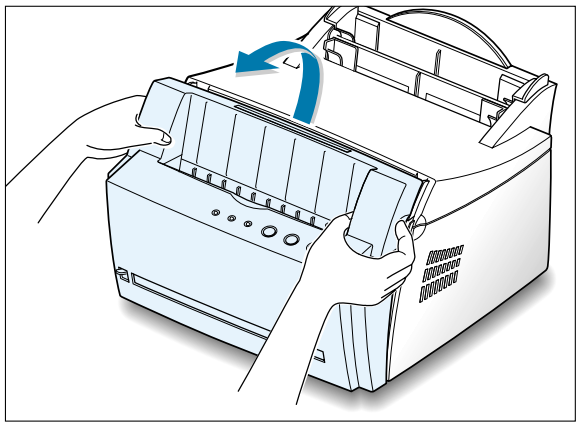

2 Remove the toner cartridge.

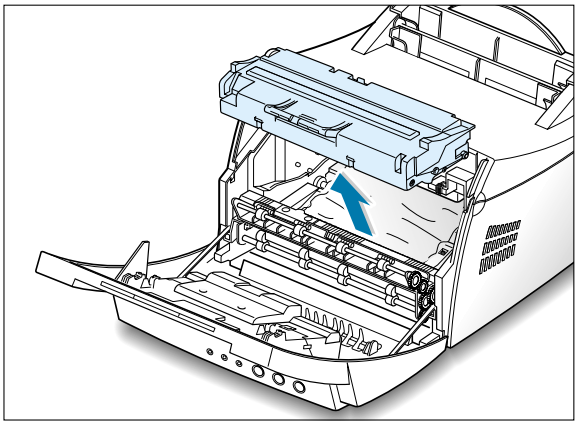

CAUTION: To prevent damage to the toner cartridge, do not expose it to light for more than a few minutes. Place a piece of paper over the top of the toner cartridge to shield it while it is out of the printer.

3 Gently pull the paper toward you to remove it from the printer.

Make sure that there is no paper remaining inside the printer.

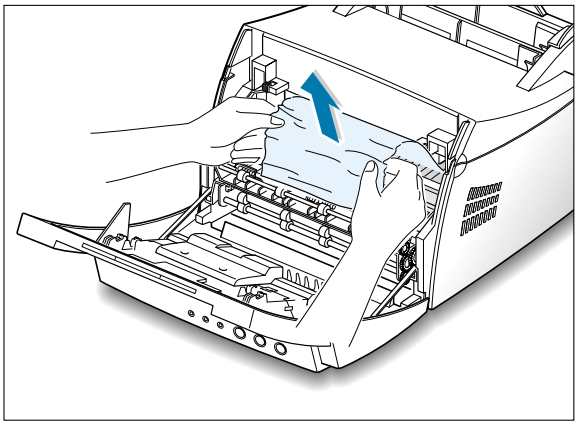

4 Reinsert the toner cartridge and close the front cover. Printing can be resumed.

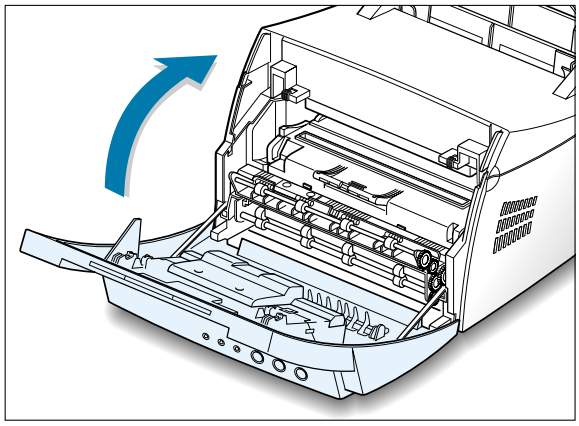

Tips for Avoiding Paper Jams

By selecting correct paper types and loading them properly, you should be able to avoid most paper jams. If paper jams occurs, follow the steps outlined in "Clearing Paper Jams" on page 7.6. If jams occur frequently, make sure you are following these tips to avoid jams.

- Follow the procedures in "**Load Paper**" on page 2.4 to load the paper properly. Make sure the adjustable guides are positioned correctly.
- Do not overload the automatic input tray. Make sure the paper is under the paper capacity mark on the inside of the tray.
- Do not remove the paper from the input tray while print jobs are in process.
- Flex, fan and straighten the paper before loading it.
- Do not load wrinkled, creased, damp or highly curled paper.
- Do not mix paper types in the input tray.
- Use only recommended print media. See "Paper Specifications" on page A.2.
- Make sure that the recommended print side is facing up when loading the paper into both input trays.
- Keep print media stored in an acceptable environment. See "Printer and Paper Storage Environment" on page A.6.

Solving Print Quality Problems

Print Quality Checklist

General print quality problems can be solved by following the checklist below.

- Redistribute the toner in the toner cartridge (see page 6.2).
- Clean the inside of the printer (see page 6.4).
- Adjust the print resolution from the printer properties (see page 5.7).
- Check to make sure that Toner Save Mode is off (see page 5.8).
- Troubleshoot general printing problems (see page 7.2).
- Install a new toner cartridge, then check print quality again (see page 2.2).

Solving Print Quality Problems

Problem	Solution
Light or faded print 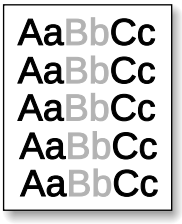 	If a vertical white streak or faded area appears on the page: • The toner supply is low. You may be able to temporarily extend the toner cartridge life. See "Redistributing the Toner" on page 6.2. If this does not improve the print quality, install a new toner cartridge. • The paper may not meet paper specifications (for example, the paper is too moist or too rough). See "Paper Specifications" on page A.2. • If the whole page is light, the print resolution setting is too light or Toner Save Mode may be on. Adjust the print resolution and Toner Save Mode within the printer properties. See page 5.7 and 5.8 respectively. • A combination of faded and smeared defects may indicate that the toner cartridge needs cleaning. See "Cleaning the Printer" on page 6.4. • The surface of LSU part inside the printer may be dirty. Clean the LSU. See "Cleaning the Printer".

Problem	Solution
Toner specks 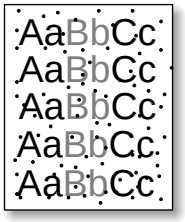 	• The paper may not meet paper specifications (for example, the paper is too moist or too rough). See "Paper Specifications" on page A.2. • The transfer roller may be dirty. See "Cleaning the Inside" on page 6.4. • The paper path may need cleaning. See "Cleaning the Inside".
Dropouts 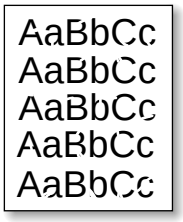 	If faded areas, generally rounded, occur randomly on the page: • A single sheet of paper may be defective. Try reprinting the job. • The moisture content of the paper is uneven or the paper has moist spots on its surface. Try a different kind or brand of paper. See "Paper Specifications" on page A.2. • The paper lot is bad. The manufacturing processes can cause some areas to reject toner. Try a different kind or brand of paper. • The toner cartridge may be defective. See "Vertical repetitive defects" on the next page. • If these steps do not correct the problems, contact a service representative.
Vertical lines 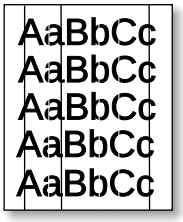 	If black vertical streaks appear on the page: • The photosensitive drum inside the toner cartridge has probably been scratched. Install a new toner cartridge. If white vertical streaks appear on the page: • The surface of LSU part inside the printer may be dirty. Clean the LSU (see page 6.4).

Problem	Solution
Gray background 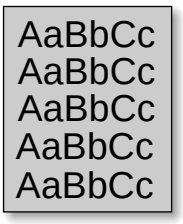 	If the amount of background toner shading becomes unacceptable, the procedures below may help to clear the condition: • Change the paper to a lighter basis weight. See "Paper Specifications" on page A.2. • Check the printer's environment; very dry (low humidity) or high humidity (higher than 80 % RH) conditions can increase the amount of background shading. • Install a new toner cartridge.
Toner smear 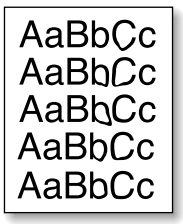 	• Clean the inside of the printer. See "Cleaning the Inside" on page 6.4. • Check the paper type and quality. See "Paper Specifications" on page A.2. • Try installing a new toner cartridge.
Vertical repetitive defects 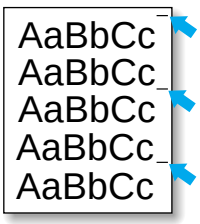 	If marks repeatedly appear on the printed side of the page at even intervals: • The toner cartridge may be damaged. If a repetitive mark occurs every 95 mm or 38 mm on the page, print a cleaning sheet several times to clean the cartridge (see page 6.5). After the printout, if you still have the same problems, install a new toner cartridge. • Parts in the printer may have toner on them. If the defects occur on the back of the page, the problem will likely correct itself after a few more pages. • The fusing assembly may be damaged. Contact a service representative.

Problem	Solution
Background scatter 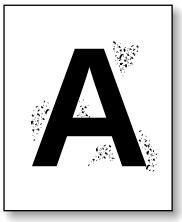	Background scatter results from bits of toner distributed on the printed page. • The paper may be too damp. Try printing with a different batch of paper. Do not open packages of paper until necessary so that the paper does not absorb too much moisture from the air. • If background scatter occurs on an envelope, change your printing layout to avoid printing over areas that have overlapping seams on the reverse side. Printing on seams can cause this problem. • If background scatter covers the entire surface of a printed page, adjust the print resolution through your software application or the printer properties.
Misformed characters 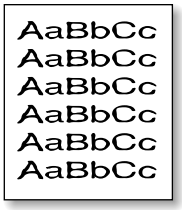 	• If characters are improperly formed, producing hollow images, the paper stock may be too slick. Try a different paper. See "Paper Specifications" on page A.2. • If characters are improperly formed, producing a wavy effect, the scanner unit may need service. Verify that it also occurs on a demo page by pressing the **Demo** button on the control panel when printer is ready. If you need service, contact a service representative.
Page skew 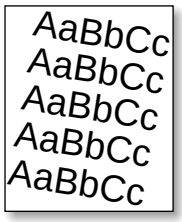 	• Check the paper type and quality. See "Paper Specifications" on page A.2. • Make sure that the paper or other media is loaded correctly and the guides are not too tight or too loose against the paper stack.

Problem	Solution
Curl or wave 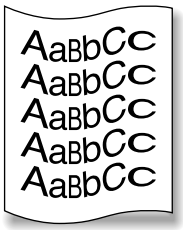	• Check the paper type and quality. Both high temperature and humidity will cause paper curl. See "Paper Specifications" on page A.2. • Turn over the stack of paper in the input tray. Also try rotating the paper 180° in the input tray. • Push the output lever and try printing to the face up output slot.
Wrinkles or creases 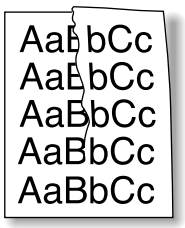	• Make sure that paper is loaded properly. • Check the paper type and quality. See "Paper Specifications" on page A.2. • Push the output lever and try printing to the face up output slot. • Turn over the stack of paper in the input tray. Also try rotating the paper 180° in the feeder.
Back of printouts dirty 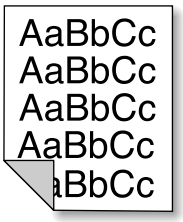	• The transfer roller may be dirty. See "Cleaning the Inside" on page 6.4. • Check if the toner is leaking. Clean inside the printer.
Black pages 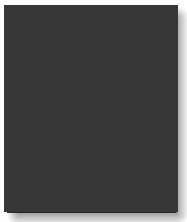	• The toner cartridge may not be installed properly. Remove the cartridge and reinsert it. • The toner cartridge may be defective and need replacing. Install a new toner cartridge. • The printer may require repairs. Contact a service representative.

Problem	Solution
Loose toner 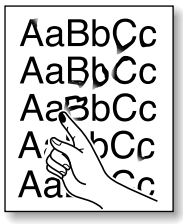 	• Clean the inside of the printer. • Check the paper type and quality. See "Paper Specifications" on page A.2. • Try installing a new toner cartridge. • If the problem persists, the printer may require repairs. Contact a service representative.
Character Voids 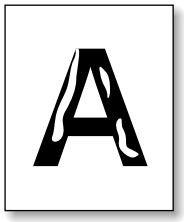 	Character voids are white areas within the parts of characters that should be solid black: • If you are using transparencies when you experience this problem, try another type of transparency. (Because of the composition of transparency media, some character voids are normal.) • You may be printing on the wrong surface on the paper. Remove the paper and turn it around. • The paper may not meet paper specifications. See "Paper Specifications" on page A.2.
Horizontal stripes 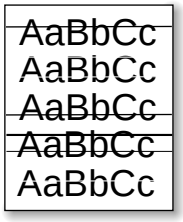 	If horizontally aligned black streaks or smears appear: • The toner cartridge may be installed improperly. Remove the cartridge and reinsert it. • The toner cartridge may be defective. Install a new toner cartridge. • If the problem persists, the printer may require repairs. Contact a service representative.

Troubleshooting Error Messages

When the printer experiences an error, the control panel will indicate error messages by the indicator lights. Find the light pattern below that matches the printer light pattern and follow the solutions to clear the error.

Printer Light Patterns

Light status legend

symbol for "light off"

symbol for "light on"

symbol for "light blinking"

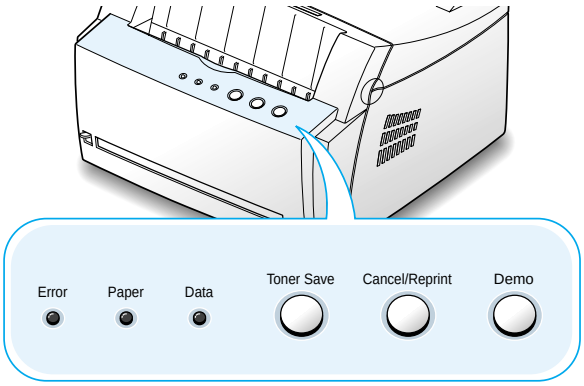

Error Paper Data

Power off

- Check the power cord and the power switch if your printer does not generate a response.
- Make sure that the printer is powered with the specified AC voltage.

Error Paper Data

Paper jam, or no toner cartridge

Paper is jammed inside the printer or the toner cartridge is not installed.

- Clear the paper jam. See "Clearing Paper Jams" on page 7.6.
- Make sure that the toner cartridge is correctly installed in the printer.

Error Paper Data

Paper out

The printer is out of paper in the input tray.

- Load paper into the tray. For the automatic input tray, loading paper will cancel this message and allow you to continue with the print job. For the manual input tray, press the **Demo** button after loading paper.

Error Paper Data

Waiting the Demo button to be pressed

While printing in the manual feed mode, the printer is waiting the **Demo** button to be pressed.

- Press the **Demo** button on the control panel to start printing. You must press the button to print each page after loading paper into the manual input tray.

Error Paper Data

Door open

The printer front cover may be opened.

- Check that the printer front cover door is closed properly.

Error Paper Data

Canceling a job or memory out

While your printer is canceling a job (see page 5.5), the **Error** light blinks. When canceling is completed, this message will automatically cleared. Otherwise, the printer memory ran out of memory in the middle of a print job. The page being printed may have been too complex for the memory capacity of the printer. Press the **Cancel/Reprint** button to cancel the current job.

- Try to free some printer memory by removing any unnecessary fonts, macros, or any data currently in printer memory.
- Simplify the image or print at a lower resolution.

Error Paper Data

System error - Fuser or LSU error

- Reset the printer by briefly turning the printer off and back on again.
- If the error persists, contact the service representative.

Common Windows Problems

Problem	Possible Cause and Solution
"File in Use" message appears during installation.	Quit all software application. Remove all software from the StartUp Group, then restart Windows. Reinstall the printer driver.
"Error Writing to LPTx" message appears.	• Make sure the cables are connected correctly, the printer is on, and the **Data** light on the control panel is on. • If bi-directional communication is not turned on in the driver, it will also cause this message. • From the **Start** menu, select **Settings**, then **Printers**. Right-click on the Samsung ML-4500 printer icon and select **Properties**. From the **Details** tab, click on **Port Settings**. Remove check from **Check Port State before Printing** box and click **OK**. From **Spool Settings**, select **Print Directly to Printer** and click **OK**. Try printing again.
"General Protection Fault", "Exception OE", "Spool32", or "Illegal Operation" messages appears.	• Close all other applications, reboot Windows, and try printing again. • Delete all temp files from the Temp sub-directory. You can determine the name of the directory by editing the AUTOEXEC.BAT file and locking for the statement, "**Set Temp =**". The name after this statement is the temp directory. It is usually **C:\temp** by default, but can be redefined.

Note: Refer to Microsoft Windows 9x or NT 4.0 documentation that came with your PC for further information on Windows error messages.

Appendix

This appendix provides information on the following topics:

- Printer Specifications
- Paper Specifications
- Installing Software from Diskette
- Linux Driver Installation

Printer Specifications

Item	Specification and Description
Print Speed	8 PPM
Resolution	600 dpi
First Printing Time	Less than 18 seconds
WarmUp Time	Less than 30 seconds
Power Rating	AC 100 ~ 120 V (USA, Canada) / 220 ~ 240 V (Others), 50 / 60 Hz
Power Consumption	180 W average during operation / Less than 10 W in sleep mode
Acoustic Noise	Stand by: Less than 35 dB; Operating: Less than 47 dB
Toner Supply	Single cartridge
Toner Cartridge Life	2,500 pages (for starter, 1,000 pages), 5% area coverage
Duty Cycle	Monthly: 5,000 pages maximum Machine life: 50,000 pages (5 years)
Weight	6.5 Kg / 13.4 lb.
Package Weight	Paper: 1.83 Kg Plastic: 0.33 Kg
External Dimensions (W x D x H)	329 x 343 x 224 mm / 12.9 x 13.5 x 8.8 in.
Operating Environment	Temperature:10 ~ 32 °C / 50 ~ 90 °F; Humidity: 20 ~ 80 % RH
Emulation	PrinThru
Random Access Memory (RAM)	2 MB (nonexpandable)
Interface	• 8 PPM (A4) Bidirectional Parallel Standard - Modes supported: Compatible, Nibble, Byte, ECP

Paper Specifications

Overview

This printer accepts a variety of media, such as cut-sheet paper (including up to 100 % recycled fiber content paper), envelopes, labels, transparencies and custom-size paper. Properties such as weight, composition, grain and moisture content are important factors affecting printer performance and output quality. Paper that does not meet the guidelines outlined in this manual can cause the following problems:

- Poor print quality
- Increased paper jams
- Premature wear on the printer, requiring repairs.

Notes:

- Some paper may meet all of the guidelines in this manual and still not produce satisfactory results. This might be the result of improper handling, unacceptable temperature and humidity levels, or other variables over which Samsung has no control.
- Before purchasing large quantities of paper, make sure that the paper meets the requirements specified in this user guide. Always test paper before buying large quantities.

CAUTION: Using paper that does not meet this specifications may cause problems for the printer, requiring repairs. This repair is not covered by the Samsung warranty or service agreements.

Supported Sizes of Paper

<table>
<tr><th>Paper</th><th colspan="2">Dimensions</th><th>Weight</th><th>Capacity[a]</th></tr>
<tr><td>Letter</td><td colspan="2">8.5 X 11 in. (216 X 279 mm)</td><td rowspan="6">16 to 24 lb Bond (60 to 105 g/m²)</td><td rowspan="6">• 150 sheets of 20 lb Bond (75 g/m²) paper for the automatic input tray
• 1 sheet paper for the manual input tray</td></tr>
<tr><td>A4</td><td colspan="2">210 X 297 mm (8.3 X 11.7 in.)</td></tr>
<tr><td>Executive</td><td colspan="2">7.3 X 10.5 in. (191 X 267 mm)</td></tr>
<tr><td>Legal</td><td colspan="2">8.5 X 14 in. (216 X 356 mm)</td></tr>
<tr><td>B5 (JIS)</td><td colspan="2">182 X 257 mm (7.2 X 10 in.)</td></tr>
<tr><td>Folio</td><td colspan="2">216 X 330 mm (8.5 X 13 in.)</td></tr>
<tr><td rowspan="2">Minimum Size (custom)</td><td>Automatic Input Tray</td><td>95 X 127 mm (3.8 X 5 in.)</td><td rowspan="3">60 to 163 g/m² Bond (16 to 43 lb)</td><td rowspan="6">• 5 sheets of 20 lb Bond (75 g/m²) paper for the automatic input tray
• 1 sheet paper for the manual input tray</td></tr>
<tr><td>Manual Input Tray</td><td>76 X 127 mm (3 X 5 in.)</td></tr>
<tr><td>Maximum Size (custom)</td><td colspan="2">216 X 356 mm (8.5 X 14 in.)</td></tr>
<tr><td>Transparency</td><td colspan="2" rowspan="3">Same minimum and maximum paper sizes as listed above.</td><td rowspan="2">Thickness: .10 X .14 mm (0.0039 X 0.0055 in.)</td></tr>
<tr><td>Labels[b]</td></tr>
<tr><td>Envelopes</td><td>up to 90 g/m² (16-24 lb)</td></tr>
</table>

a. Capacity may vary depending on media weight and thickness, and environmental conditions.
b. Smoothness - 100 to 250 (Sheffield)

Note: You may experience some paper jams when using any media with a length of less than 127 mm (5 in.). For optimum performance, make sure you are storing and handling the paper correctly. Please refer to “Printer and Paper Storage Environment” on page A.6.

Guidelines for Using Paper

For best results, use conventional 90 g/m^2 (24 lb) paper. Make sure the paper is of good quality, and free of cuts, nicks, tears, spots, loose particles, dust, wrinkles, voids, and curled or bent edges.

If you are unsure of what type of paper you are loading (such as bond or recycled), check the label on the package of the paper.

The following problems with paper cause print quality deviations, jamming, or even damage to the printer.

Symptom	Problem with Paper	Solution
Poor print quality or toner adhesion Problems with feeding	Too moist, too rough, too smooth, or embossed; faulty paper lot	Try another kind of paper, between 100 ~ 250 Sheffield, 4 ~ 5 % moisture content.
Dropout, jamming, curl	Stored improperly	Store paper flat in its moisture-proof wrapping.
Increased gray background shading /printer wear	Too heavy	Use lighter paper, open the rear output tray.
Excessive curl problems with feeding	Too moist, wrong grain direction or short-grain construction	• Open the rear output tray. • Use long-grain paper.
Jamming, damage to printer	Cutouts or perforations	Do not use paper with cutouts or perforations.
Problems with feeding	Ragged edges	Use good quality paper

Notes:

- Do not use letterhead paper that is printed with low-temperature inks, such as those used in some types of thermography.
- Do not use raised or embossed letterhead.
- The printer uses heat and pressure to fuse toner to the paper. Make sure that any colored paper or preprinted forms use inks that are compatible with this fusing temperature (200 °C or 392 °F for 0.1 second).

Paper Specifications

Category	Specifications
Acid Content	5.5 ~ 8.0 pH
Caliper	.094 ~ .18 mm (3.0 ~ 7.0 mils)
Curl in Ream	Flat within 5 mm (.02 in.)
Cut Edge Conditions	Cut with sharp blades with no visible fray.
Fusing Compatibility	Must not scorch, melt, offset, or release hazardous emissions when heated to 200 °C (392 °F) for .1 second.
Grain	Long Grain
Moisture Content	4 % ~ 6 % by weight
Smoothness	100 ~ 250 Sheffield

Paper Output Capacity

Output Tray	Capacity
Face-down output tray	100 sheets of 20 lb bond (75 g/m^2) paper
Face-up output slot	1 sheets of 20 lb bond (75 g/m^2) paper

Printer and Paper Storage Environment

Ideally, the printer and paper storage environment should be at or near room temperature, and not too dry or humid. Remember that paper is hygroscopic; it absorbs and loses moisture rapidly.

Heat works with humidity to damage paper. Heat causes the moisture in paper to evaporate, while cold causes it to condense on the sheets. Heating systems and air conditioners remove most of the humidity from a room. As paper is opened and used, it loses moisture, causing streaks and smudging. Humid weather or water coolers can cause the humidity to increase in a room. As paper is opened and used it absorbs any excess moisture, causing light print and dropouts. Also, as paper loses and gains moisture it can distort. This can cause paper jams.

As a result, paper storage and handling are as important as the paper-making process itself. Paper storage environmental conditions directly affect the feed operation.

Care should be taken not to purchase more paper than can be easily used in a short time (about 3 months). Paper stored for long periods may experience heat and moisture extremes, which can cause damage. Planning is important to prevent damage to large supply of paper.

Unopened paper in sealed reams can remain stable for several months before use. Opened packages of paper have more potential for environment damage, especially if they are not wrapped with a moisture-proof barrier.

The paper storage environment should be properly maintained to ensure optimum printer performance. The required condition is 20 ° to 24 °C (68° to 75 °F), with a relative humidity of 45 % to 55 %. The following guidelines should be helpful when evaluating the paper's storage environment:

- Paper should be stored at or near room temperature.
- The air should not be too dry or too humid (due to the hygroscopic properties of paper).
- The best way to store an opened ream of paper is to rewrap it tightly in its moisture-proof wrapping. If the printer environment is subject to extremes, unwrap only the amount of paper to be used during the day's operation to prevent unwanted moisture changes.

Envelopes

Envelope construction is critical. Envelope fold lines can vary considerably, not only between manufacturers, but also within a box from the same manufacturer. Successful printing on envelopes depends upon the quality of the envelopes. When selecting envelopes, consider the following components:

- **Weight:** The weight of the envelope paper should not exceed 90 g/m^2 (24 lb) or jamming may occur.
- **Construction:** Prior to printing, envelopes should lie flat with less than 6 mm (0.25 in.) curl, and should not contain air.
- **Condition:** Envelopes should not be wrinkled, nicked, or otherwise damaged.
- **Temperature:** You should use envelopes that are compatible with the heat and pressure of the printer.
- **Size:** You should use only envelopes within the following size ranges.

	Minimum	Maximum
Automatic input tray	95 X 127mm (3.8 X 5 in.)	216 X 356 mm (8.5 X 14 in.)
Manual input tray	76 X 127 mm (3 X 5 in.)	

Note: You may experience some paper jams when using any media with a length of less than 127 mm (5 in.). This may be caused by paper that has been affected by environmental conditions. For optimum performance, make sure you are storing and handling the paper correctly. Please refer to "Printer and Paper Storage Environment" on page A.6.

Envelopes with Double Side Seams

Double side-seams construction has vertical seams at both ends of the envelope rather than diagonal seams. This style may be more likely to wrinkle. Be sure the seam extends all the way to the corner of the envelope as illustrated below.

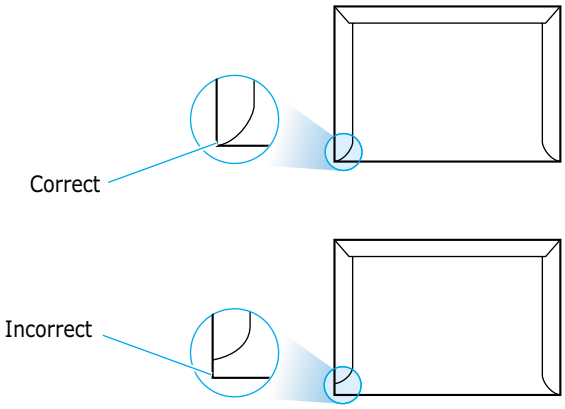

Envelopes with Adhesive Strips or Flaps

Envelopes with a peel-off adhesive strip or with more than one flap that folds over to seal must use adhesives compatible with the heat and pressure in the printer. The extra flaps and strips might cause wrinkling, creasing, or even jams and may even damage the fuser.

Envelope Margins

The following gives typical address margins for a commercial #10 or DL envelope.

Type of Address	Minimum	Maximum
Return address	15 mm (0.6 in.)	15 mm (0.6 in.)
Delivery address	51 mm (2 in.)	89 mm (3.5 in.)

Notes:

- For best print quality, position margins no closer than 15 mm (0.6 in.) from the edges of the envelope.
- Avoid printing over the area where the envelope's seams meet.

Envelope Storage

Proper storage of envelopes helps contribute to print quality. Envelopes should be stored flat. If air is trapped in an envelope, creating an air bubble, then the envelope may wrinkle during printing. See "Printing on Envelopes" on page 4.7.

Labels

CAUTIONS:

- To avoid damaging the printer, use only labels recommended for laser printers.
- To prevent serious jams, always use the face-up output slot.
- Never print on the same sheet of labels more than once or print on a partial sheet of labels.

When selecting labels, consider the quality of each component:

- **Adhesives:** The adhesive material should be stable at 200 °C (392 °F), the printer's fusing temperature.
- **Arrangement:** Only use labels with no exposed backing between them. Labels can peel off sheets with spaces between the labels, causing serious jams.
- **Curl:** Prior to printing, labels must lie flat with no more than 13 mm (.5 in.) of curl in any direction.
- **Condition:** Do not use labels with wrinkles, bubbles, or other indications of separation.

See "Printing on Labels" on page 4.10.

Transparencies

Transparencies used in the printer must be able to withstand 200 °C (392 °F), the printer's fusing temperature.

CAUTION: To avoid damaging the printer, use only transparencies recommended for use in laser printers.

See "Printing on Transparencies" on page 4.11.

Installing Software from Diskette

If you do not have a CD-ROM drive and if you have access to another computer with a CD-ROM drive, you can copy software installation files from your printer software CD-ROM onto floppy diskettes, then use the diskettes instead of the CD-ROM to install the software.

Making Installation Diskettes

You can make the installation diskettes for Samsung ML-4500 printer driver. Make sure that you have several formatted diskettes ready, then follow these steps:

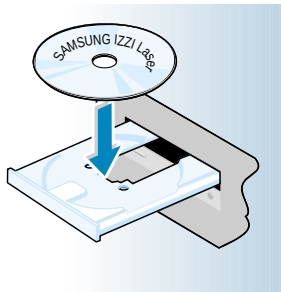

1 Insert the CD-ROM shipped with your printer into the CD-ROM drive. Installation will start automatically.

If the CD-ROM drive does not automatically run:

Select **Run** from the **Start** menu, and type **x:\cdsetup.exe** in the Open box (where **x** is the drive letter for the CD-ROM drive), then click **OK**.

2 When the opening screen appears, select the appropriate language.

3 Click **Make your own Diskette set of software.**

4 The Copy to Floppy dialog box appears.

Select the floppy disk drive you will use to insert the diskette.

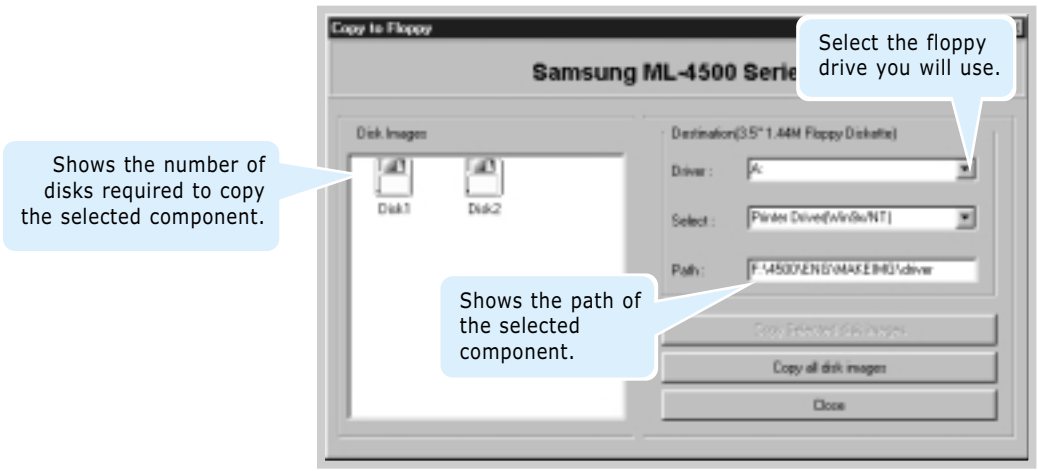

5 Click **Copy all disk images**.

If you want to copy a portion of the selected component, select the disk you want to copy in the Disk Images window, then click **Copy selected disk image**.

6 When prompted, insert a blank, formatted diskette into the floppy drive, and click **Yes** to copy the first diskette. For multiple diskettes, when the first diskette is finished, you are prompted to insert disk 2.

Make sure you label each diskette in order as you create it: Samsung ML-4500 driver, disk 1 of 2, etc.

7 If you have more than one disk, insert the next disk and click **Yes**.

8 When copying to diskettes has been completed, click **Close** in the Copy to Floppy dialog box. Then click **Exit** in the SAMSUNG PRINTER SETUP dialog box.

Installing Software

To install the printer driver from the diskettes, take the following steps:

1 Insert the first diskette (if the selected software diskettes are more than one).

2 From the **Start** menu, select **Run**.

3 Type **A:\setup.exe** in the Open box and click **OK**. (if your floppy drive is not **A**, substitute the correct letter.)

4 Follow the on-screen instruction to complete the installation.

Linux Driver Installation

This Linux driver is designed for PrinThru compatible Samsung ML-4500 Series printer and supports Linux Red Hat 6.0 or higher and Intel Linux. If your Linux version is not included, this driver might not work properly.

Linux Driver Configuration

- Install Setup Script file
  a. /cdrom/linux/install/install.sh
  b. /cdrom/linux/install/ssprt.db
  c. /cdrom/linux/install/readme.txt

- Ghostscript Package file
  a. /cdrom/linux/gs5.10/ghostscript-5.10-10.i386.rpm
  b. /cdrom/linux/gs5.10/COPYING
  c. /cdrom/linux/gs5.50/ghostscript-5.50-2.i386.rpm
  d. /cdrom/linux/gs5.50/COPYING

Installation

To install the driver, open the x terminal screen and take the following steps:

1. Mount the CD-ROM drive.

Note: To mount the CD-ROM drive, you must be a super user or must be authorized to mount the CD-ROM by the super user. If you fail to mount the CD-ROM drive, ask the system administrator.

To mount the CD-ROM drive:

1. Insert the Samsung ML-4500 CD-ROM into the CD-ROM drive.

2. Mount the CD-ROM drive under a directory like **/mnt** in order to access the files on the CD-ROM:
   >mount -t iso9660 /dev/cdrom /mnt/cdrom

2. Install the Ghostscript.

Note: Ghostscript may already be installed in your Linux machine. To support Samsung printer PrinThru, you must update the ghostscript. If you are not sure whether the ghostscript is already installed in your machine, use the command: **>rpm -q ghostscript** (You can see the version of the ghostscript currently installed in your machine by this command.)

To update the ghostscript:

1. Change to the directory where the ghostscript is in by typing in:
   >cd/mnt/cdrom/linux/gs5.XX (where **/mnt/cdrom** is the CD-ROM directory you have mounted at step 1 and **XX** is the version of the ghostscript to be installed, 10 or 50.)

2. Delete the ghostscript currently installed in your machine by typing in:
   /mnt/cdrom/linux/gs5.XX>rpm -e --nodeps ghostscript

3. Install the ghostscript which is supplied in the Samsung ML-4500 CD-ROM by typing in:
   /mnt/cdrom/linux/gs5.XX/rpm -ivh ghostscript -5.XX-xx.i386.rpm

4. When # appears in the screen and the installation is completed, the ghostscript is successfully updated. To make sure, type in:
   /mnt/cdrom/linux/gs5.XX/rpm -q ghostscript

   If 'ghostscript-5.XX-xx' message appears, the installation is successfully completed.

3. Install setup script.

For details on installing the setup script, refer to the **/cdrom/linux/install/readme.txt** file.

Add the driver to the printer list by typing in:
/cdrom/linux/install>install.sh (or)
/cdrom/linux/install>./install.sh (if the path of the current working directly is not determined.)

4. Set up the printer filter.

To set up:

1. Run **printtool** at x terminal.
2. To add the printer driver, click the **Add** button.
3. In the Add a Printer Entry window, decide the printer type you will use. Select **Local Printer** if you have a PC-connected printer.
4. Click the **OK** button.
5. If the **Info** button appears, ignore it, then click the **OK** button.
6. The Edit xxxx Entry window opens (where xxxx is the printer type you have selected at step 3).

   If you are not an advanced user, do not change the **Names/Spool Directory/File Limit in Kb/Printer Device** option.
7. Click the **Select** button in the **Input Filter** to access filter setup.
8. Select **Samsung Printer PrinThru Compatible** for the Printer Type item. Then select the default resolution and paper size.
9. To save the setting, press the **OK** button.
10. In the Edit xxxx Entry window, press the **OK** button to complete the printer driver installation.
11. You can find that the printer driver is added to the driver window. Select **Quit** from the **PrintTool** menu.

GNU Ghostscript software, in directory /linux/gs5.10 and /linux/gs5.50 on this CD is Copyright (C) 1999 Aladdin Enterprise, Menlo Park, California, and other authors as indicated in its documentation.

This software is not subject to the End User License Agreement: your rights to this software are given by the GNU License, which is in a file called COPYING in that directory.

GNU Ghostscript should be available on all GNU site, such as **ftp://ftp.gnu.org/pub/gnu/**.

INDEX

A

altitude correction 5.11
automatic input tray
  loading paper 4.5
  paper source setting 5.3

C

cancel, print job 5.5
Cancel/Reprint button 3.2
cardstock, print 4.13
clean, printer 6.4
clean sheet, print 6.5
components 1.2
control panel
  buttons 3.1
  lights 3.3

D

Data light 3.3
Demo button 3.1
demo page, print 2.7
diskette, make, install software A.10
driver
  access 5.1
  install 2.7
  remove 2.10
  in Linux A.13

E

envelopes, print 4.7
Error light 7.17
error messages 7.17

F

face-down output tray 4.4
face-up output slot 4.4
features 1.1

G

graphic mode 5.11
graphic options 5.10

I

install
  printer software 2.7
  software from diskette A.10
  toner cartridge 2.2
  Linux driver A.13

J

jam see *paper jam*

L

labels, print 4.10
letterhead, print 4.12
Linux A.13
load, paper
  In the automatic input tray 2.4
  in the manual input tray 4.5

M

manual input tray
  loading paper 4.5
  paper source setting 5.3
multiple pages on one sheet, print 5.6

N

network, setup 5.13
n-up printing 5.6

O

orientation 5.3
output lever 4.4
output location, select 4.4

P

paper
  acceptable size and capacities 4.2, A.3
  choose 4.1
  guidelines 4.3, A.4
  load 2.4, 4.5
  specifications A.2
  storage environment A.6
paper jam, clear
  input area 7.7
  inside the printer 7.8
  output area 7.6
  tips avoiding paper jams 7.10
Paper light 3.3
paper orientation, setting 5.3
paper out, indication 3.3, 7.17
paper size, setting 5.3
paper source, setting 5.3
paper type, setting 5.3
parallel, connection 2.6
power save mode 5.9
print media see *paper*
printer light patterns 3.3, 7.17
print quality problem, solving
  back of printouts dirty 7.15
  background scatter 7.14
  black pages 7.15
  character voids 7.16
  checklist 7.11
  curl or wave 7.15
  dropouts 7.12
  gray background 7.13
  horizontal stripes 7.16
  light print or fade 7.11
  loose toner 7.16
  misformed characters 7.14
  page skew 7.14
  toner smear 7.13
  toner specks 7.12
  vertical lines 7.12
  vertical repetitive defects 7.13
  wrinkles or creases 7.15
printer driver see *driver*
printer software, install 2.7
printing
  cancel 5.5
  cleaning sheet 6.5
  demo page 2.7
  general problems, solving 7.2
  help 5.5
  multi pages on one sheet 5.6
  on a network envirionment 5.13
  quality problems, solving 7.11

problem, solving
  checklist 7.1
  common windows problems 7.19
  error messages 7.17
  general 7.2
  paper jam 7.6
  print quality 7.11

Q

quality, problems 7.11

R

reprint, last page 5.12
resolution 5.7

S

setup printer chapter 2
specifications
  paper A.2
  printer A.1
system error 7.18

T

toner cartridge
  clean 6.5
  install 2.2
  life expectancy 6.1
  recycle 6.1
  redistribute toner 6.2
  save toner 5.8
  storage 6.1
Toner Save button 3.2. 5.8
transparency, print 4.11
troubleshooting see *problem, solving*

U

uninstall, driver 2.10
unpack 2.1

Visit us at:
http://www.samsungprinter.com

Home

P/N. JC68-00465A Rev.1.00