SCHEMATIC DIAGRAM

WARNING

POWER MUST BE DISCONNECTED

BEFORE SERVICING THIS APPLIANCE

COLOR	SYMBOL
GRAY	GR
WHITE	W
BLACK	B
RED	R
BLUE	BL
ORANGE	O
YELLOW	Y
GREEN	G
PINK	P
AZURE	A
VIOLET	V
BROWN	BR

GROUND

MODEL NO. : SMH7175

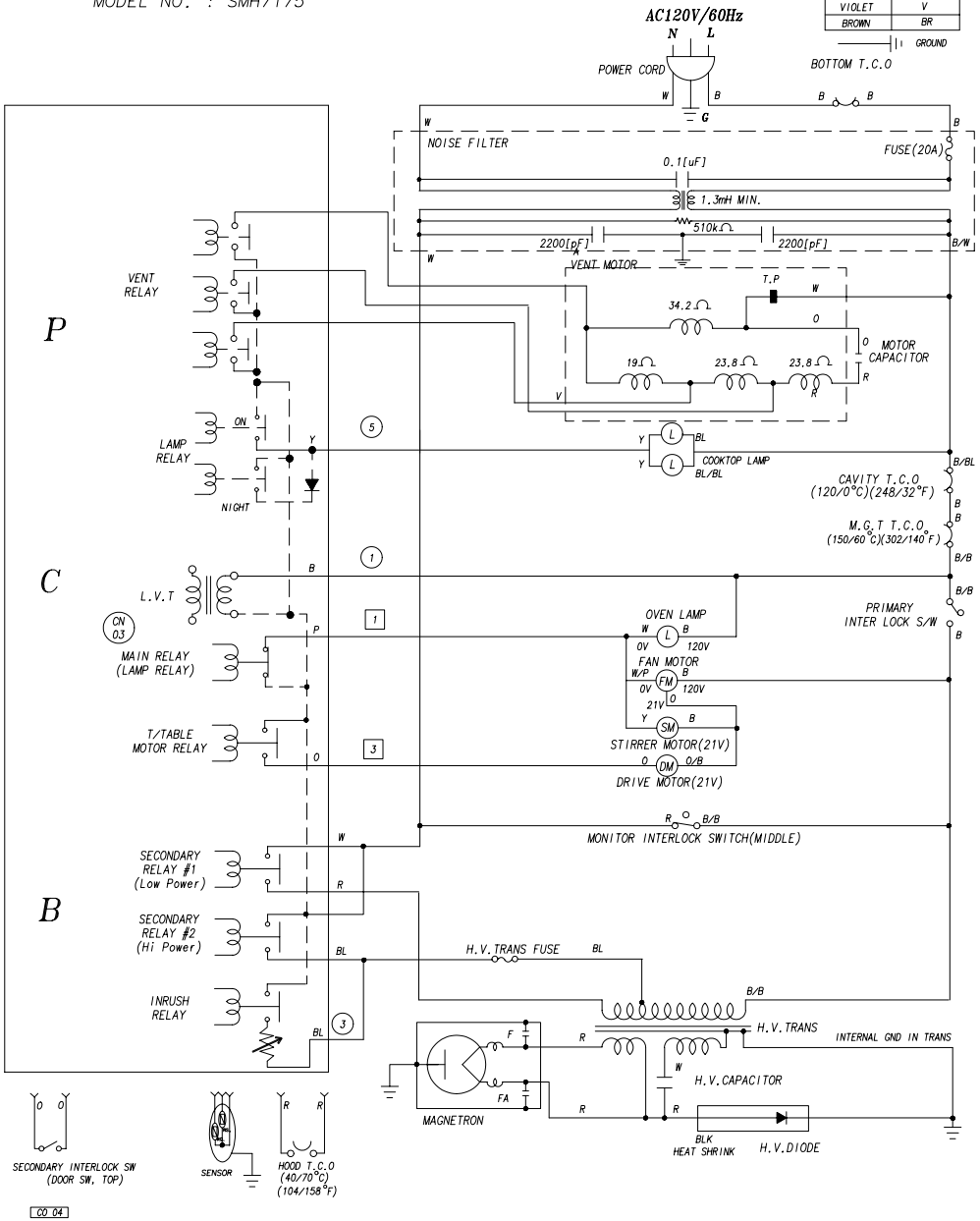

WIRING DIAGRAM

WARNING

POWER MUST BE DISCONNECTED

BEFORE SERVICING THIS APPLIANCE

COLOR	SYMBOL
GRAY	GRA
WHITE	WHT
BLACK	BLK
RED	RED
BLUE	BLU
ORANGE	ORG
YELLOW	YEL
GREEN	GRN
PINK	PIN
AZURE	AZU
VIOLET	VIL

GROUND

HARNESS LEADS

PARTS LEADS

MODEL NO. : SMH7175

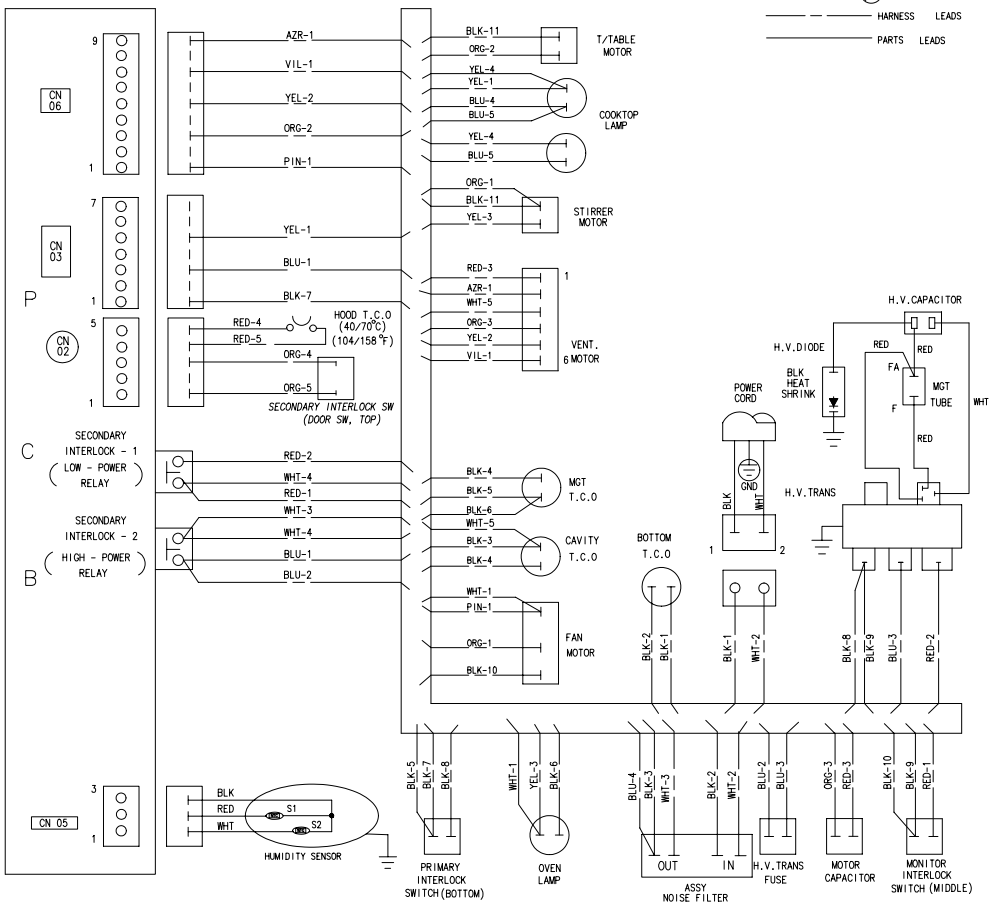

NOTE: FOR SERVICING REPLACEMENT USE 16GA, 105°C THERMOPLASTIC COVERED WIRE EXCEPT FOR HIGH VOLTAGE LEADS OR AS NOTED ON SPECIAL LEADS.

Printed in Malaysia

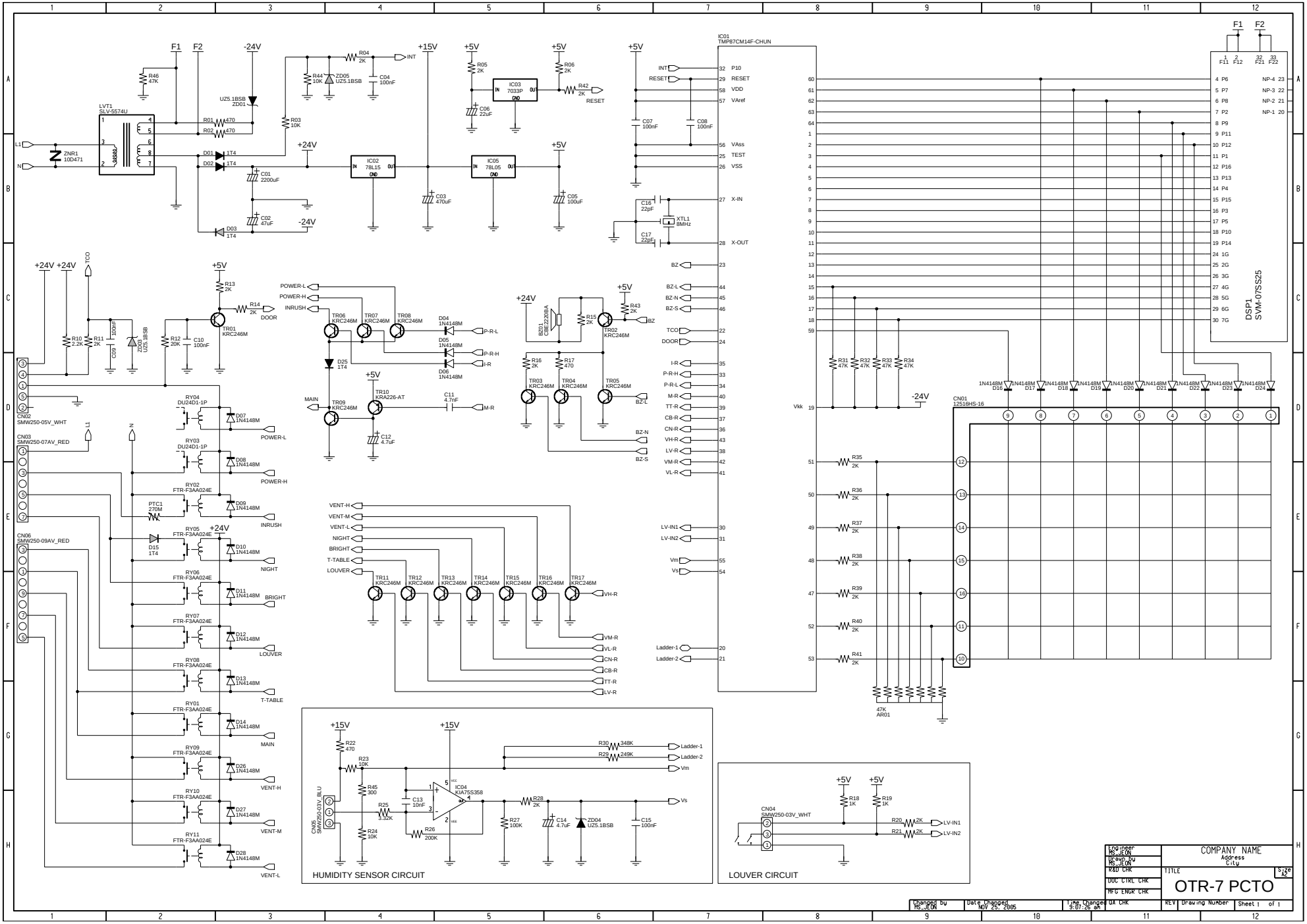
IC01
TMP87CM14F-CHUN
DSP1
SVM-07SS25
CN01
12516HS-16
CN02
SMW250-05V_WHT
CN03
SMW250-07AV_RED
CN06
SMW250-09AV_RED
CN05
SMW250-03V_BLU
CN04
SMW250-03V_WHT
LVT1
SLV-5574U
HUMIDITY SENSOR CIRCUIT
LOUVER CIRCUIT
COMPANY NAME
Address
City
OTR-7 PCTO
Engineer
MS_JEON
Drawn by
MS_JEON
R&D CHK
DOC CTRL CHK
MFG ENGR CHK
QA CHK
Size
A2
Sheet 1 of 1
Changed by
MS_JEON
Date Changed
NOV 25, 2005
Time Changed
9:07:26 am