Microwave Oven

Use & Care Guide

Model AMC2206BA

Important Safety Instructions 2

Installation and Operation 5

Features 7

Operating Instructions 9

Care and Cleaning 21

Cooking Utensils 22

Troubleshooting. 23

Warranty 24

Keep instructions for future reference.
Be sure Use & Care Guide stays with oven.

Form No.

Code No. DE68-03153A

Important Safety Instructions

Installer: Please leave this guide with this appliance.
Consumer: Please read and keep this Use & Care Guide for future reference.
Keep sales receipt and/or cancelled check as proof of purchase.
Model Number _____
Serial Number_____
Date of Purchase _____
In our continuing effort to improve the quality and performance of our appliances, it may be necessary to make changes to the appliance without revising this guide.
If you have questions, write us (include your model number and phone number) or call:

Maytag Services℠
Attn: CAIR® Center
P.O. Box 2370
Cleveland, TN 37320-2370
1-800-843-0304 U.S.A
1-866-587-2002 CANADA
1-800-688-2080 (US TTY for hearing or speech impaired)
(Mon.-Fri., 8 a.m.-8 p.m. Eastern Time)
Internet: http://www.amana.com

Precautions to Avoid Possible Exposure to Excessive Microwave Energy

A. **DO NOT** attempt to operate this oven with the door open since open door operation can result in harmful exposure to microwave energy. It is important not to defeat or tamper with the safety interlocks.
B. **DO NOT** place any object between the oven front face and the door to allow soil or cleaner residue to accumulate on sealing surfaces.
C. **DO NOT** operate the oven if it is damaged. It is particularly important that oven door close properly and that there is no damage to:
   1. door (bent),
   2. hinges and latches (broken or loosened),
   3. door seals and sealing surfaces.
D. Oven should not be adjusted or repaired by anyone except properly qualified service personnel.

⚠ CAUTION

To avoid personal injury or property damage, observe the following:

1. Do not deep fat fry in oven. Fat could overheat and be hazardous to handle.
2. Do not cook or reheat eggs in shell or with an unbroken yolk using microwave energy. Pressure may build up and erupt. Pierce yolk with fork or knife before cooking.
3. Pierce skin of potatoes, tomatoes, and similar foods before cooking with microwave energy. When skin is pierced, steam escapes evenly.
4. Do not operate oven without load or food in oven cavity.
5. Use only popcorn in packages designed and labeled for microwave use. Popping time varies depending on oven wattage. Do not continue to heat after popping has stopped. Popcorn will scorch or burn. Do not leave oven unattended.
6. Do not use regular cooking thermometers in oven. Most cooking thermometers contain mercury and may cause an electrical arc, malfunction, or damage to oven.
7. Do not use metal utensils in oven.
8. Never use paper, plastic, or other combustible materials that are not intended for cooking.
9. When cooking with paper, plastic, or other combustible materials, follow manufacturer's recommendations on product use.
10. Do not use paper towels which contain nylon or other synthetic fibers. Heated synthetics could melt and cause paper to ignite.
11. Do not heat sealed containers or plastic bags in oven. Food or liquid could expand quickly and cause container or bag to break. Pierce or open container or bag before cooking.
12. To avoid pacemaker malfunction, consult physician or pacemaker manufacturer about effects of microwave energy on pacemaker.

Important Safety Instructions

⚠ WARNING

To avoid risk of electrical shock or death, this oven must be grounded and plug must not be altered.

Grounding Instructions

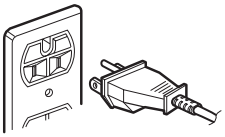

Oven MUST be grounded. Grounding reduces risk of electric shock by providing an escape wire for the electric current if an electrical short occurs. This oven is equipped with a cord having a grounding wire with a grounding plug. The plug must be plugged into an outlet that is properly installed and grounded. See Installation Instructions.

Consult a qualified electrician or servicer if grounding instructions are not completely understood, or if doubt exists as to whether the oven is properly grounded.

Do not use an extension cord. If the product power cord is too short, have a qualified electrician install a three-slot receptacle. This oven should be plugged into a separate 60 hertz circuit with the electrical rating as shown in specifications table. When the oven is on a circuit with other equipment, an increase in cooking times may be required and fuses can be blown. Microwave operates on standard household current, 110-120V.

Federal Communications Commission Radio Frequency Interference Statement (U.S.A. Only)

This equipment generates and uses ISM frequency energy and if not installed and used properly, that is in strict accordance with the manufacturer's instructions, may cause interference to radio and television reception. It has been type tested and found to comply with limits for ISM Equipment pursuant to part 18 of FCC Rules, which are designed to provide reasonable protection against such interference in a residential installation.

However, there is no guarantee that interference will not occur in a particular installation. If this equipment does cause interference to radio or television reception, which can be determined by turning the equipment off and on, the user is encouraged to try to correct the interference by one or more of the following:

- Reorient the receiving antenna of the radio or television.
- Relocate the microwave oven with respect to the receiver.
- Move the microwave oven away from the receiver.
- Plug the microwave oven into a different outlet so that the microwave oven and the receiver are on different branch circuits.

The manufacturer is not responsible for any radio or television interference caused by **unauthorized modification** to this microwave oven. It is the responsibility of the user to correct such interference.

What You Need to Know About Safety Instructions

Warning and Important Safety Instructions appearing in this Use & Care Guide are not meant to cover all possible conditions and situations that may occur. Common sense, caution, and care must be exercised when installing, maintaining, or operating microwave.

Always contact your dealer, distributor, service agent, or manufacturer about problems or conditions you do not understand.

Recognize Safety Symbols, Words, Labels

⚠ DANGER

DANGER – Immediate hazards which **WILL** result in severe personal injury or death.

⚠ WARNING

WARNING – Hazards or unsafe practices which **COULD** result in severe personal injury or death.

⚠ CAUTION

CAUTION – Hazards or unsafe practices which **COULD** result in minor personal injury.

⚠ WARNING

Liquids such as water, coffee, or tea are able to be overheated beyond the boiling point without appearing to be boiling due to surface tension of the liquid. Visible bubbling or boiling when the container is removed from the microwave oven is not always present. **THIS COULD RESULT IN VERY HOT LIQUIDS SUDDENLY BOILING OVER WHEN A SPOON OR OTHER UTENSIL IS INSERTED INTO THE LIQUID.** To reduce the risk of injury to persons:

1. Do not overheat the liquid.
2. Stir the liquid both before and halfway through heating it.
3. Do not use straight-sided containers with narrow necks.
4. After heating, allow the container to stand in the microwave oven for a short time before removing the container.
5. Use extreme care when inserting a spoon or other utensil into the container.

SAVE THESE INSTRUCTIONS

Important Safety Instructions

⚠ WARNING

When using electrical appliances, basic safety precautions should be followed to reduce the risk of burns, electric shock, fire, or injury to persons or exposure to excessive microwave energy.

1. **READ** all instructions before using oven.
2. **READ AND FOLLOW** the specific "PRECAUTIONS TO AVOID POSSIBLE EXPOSURE TO EXCESSIVE MICROWAVE ENERGY" on page 3.
3. Install or locate this oven **ONLY** in accordance with the installation instructions in this manual.
4. Some products such as whole eggs and sealed containers—for example, closed glass jars—are able to explode and **SHOULD NOT** be **HEATED** in this oven.
5. Use this oven **ONLY** for its intended use as described in this manual. Do not use corrosive chemicals or vapors in this oven. This type of oven is specifically designed to heat, cook, or dry food. It is not designed for industrial or laboratory use.
6. As with any appliance, **CLOSE SUPERVISION** is necessary when used by **CHILDREN** or **INFIRM PERSONS.**
7. See door cleaning instructions in the Care and Cleaning section.
8. Baby food jars shall be open when heated and contents stirred or shaken before consumption, in order to avoid burns.
9. **DO NOT** use this oven for commercial purposes. It is made for household use only.
10. **DO NOT** heat baby bottles in oven.
11. **DO NOT** operate this oven if it has a damaged cord or plug, if it is not working properly, or if it has been damaged or dropped.
12. This oven, including power cord, must be serviced **ONLY** by qualified service personnel. Special tools are required to service oven. Contact nearest authorized service facility for examination, repair, or adjustment.
13. **DO NOT** cover or block filter or other openings on oven.
14. **DO NOT** store this oven outdoors. **DO NOT** use this product near water – for example, near a kitchen sink, in a wet basement, near a swimming pool or similar locations.
15. **DO NOT** immerse cord or plug in water.
16. Keep cord **AWAY** from **HEATED** surfaces.
17. **DO NOT** let cord hang over edge of table or counter.

⚠ CAUTION

To avoid risk of fire in the oven cavity:

a. **DO NOT** overcook food. Carefully attend oven when paper, plastic, or other combustible materials are placed inside the oven to facilitate cooking.

b. Remove wire twist-ties from paper or plastic bags before placing bag in oven.

c. If materials inside the oven ignite, keep oven door **CLOSED**, turn oven off and disconnect the power cord, or shut off power at the fuse or circuit breaker panel.

d. **DO NOT** use the cavity for storage. **DO NOT** leave paper products, cooking utensils, or food in the cavity when not in use.

SAVE THESE INSTRUCTIONS

Installation and Operation

CIRCUITS

For safety purposes this oven must be plugged into a 15 or 20 Amp circuit. No other electrical appliances or lighting circuits should be on this line. If in doubt, consult a licensed electrician.

VOLTAGE

The voltage used at the wall receptacle must be the same as specified on the oven name plate located inside oven door. Use of a higher voltage is dangerous and may result in a fire or other type of accident causing oven damage. Low voltage will cause slow cooking. In case your microwave oven does not perform normally in spite of proper voltage, remove and reinsert the plug.

PLACEMENT OF THE OVEN

Your microwave oven can be placed easily in your kitchen, family room, or anywhere else in your home. Place the oven on a flat surface such as a kitchen countertop or a specially designed microwave oven cart. Do not place oven above a gas or electric range. Free air flow around the oven is important.

UNPACKING OVEN

- Inspect oven for damage such as dents in door or inside oven cavity.
- Report any dents or breakage to source of purchase immediately. Do not attempt to use oven if damaged.
- Remove all materials from oven interior.
- If oven has been stored in extremely cold area, wait a few hours before connecting power.

BUILT-IN CAPACITY

For information call:

1-800-843-0304 U.S.A.

1-866-587-2002 Canada

DO NOT BLOCK AIR VENTS

All air vents should be kept clear during cooking. If air vents are covered during oven operation the oven may overheat. In this case, a sensitive thermal safety device automatically turns the oven off.The oven will be inoperable until it has cooled sufficiently. Installation and Operation

GETTING THE BEST RESULTS FROM YOUR MICROWAVE OVEN

Keep an eye on things. The instructions in this book have been formulated with great care, but your success in preparing food depends, of course, on how much attention you pay to the food as it cooks. Always watch your food while it cooks. Your microwave oven is equipped with a light that turns on automatically when the oven is in operation so that you can see inside and check the progress of your recipe. Directions given in recipes to elevate, stir, and the like should be thought of as the minimum steps recommended. If the food seems to be cooking unevenly, simply make the necessary adjustments you think appropriate to correct the problem.

Factors affecting cooking times. Many factors affect cooking times. The temperature of ingredients used in a recipe makes a big difference in cooking times. For example, a cake made with ice-cold butter, milk, and eggs will take considerably longer to bake than one made with ingredients that are at room temperature. All of the recipes in this book give a range of cooking times. In general, you will find that the food remains undercooked at the lower end of the time range, and you may sometimes want to cook your food beyond the maximum time given, according to personal preference. The governing philosophy of this book is that it is best for a recipe to be conservative in giving cooking times. While undercooked food may always be cooked a bit more, overcooked food is ruined for good. Some recipes, particularly those for bread, cakes, and custard, recommend that food be removed from the oven when they are slightly undercooked. This is not a mistake. When allowed to stand, usually covered, these foods will continue to cook outside of the oven as the heat trapped within the outer portions of the foods gradually travels inward. If the foods are left in the oven until they are cooked all the way through, the outer portions will become overcooked or even burned. As you gain experience in using your microwave oven, you will become increasingly skillful in estimating both cooking and standing times for various foods.

SPECIAL TECHNIQUES IN MICROWAVE COOKING

Browning: Meats and poultry that are cooked fifteen minutes or longer will brown lightly in their own fat. Foods that are cooked for a shorter period of time may be brushed with a browning sauce to achieve an appetizing color. The most commonly used browning sauces are Worcestershire sauce, soy sauce, and barbecue sauce. Since relatively small amounts of browning sauces are added to foods, the original flavor of recipes is not altered.

Covering: A cover traps heat and steam and causes food to cook more quickly. You may either use a lid or microwave cling-film with a corner folded back to prevent splitting.

Covering with waxed paper: Waxed paper effectively prevents spattering

and helps food retain some heat.

Since it makes a looser cover than a lid or cling-film, it allows the food to dry out slightly.

Wrapping in waxed paper or paper towel: Sandwiches and many other foods containing prebaked bread should be wrapped prior to microwaving to prevent drying out.

Arranging and spacing: Individual foods such as baked potatoes, small cakes, and hors d'oeuvres will heat more evenly if placed in the oven and equal distance apart, preferably in a circular pattern. Never stack foods on top of one another.

Stirring: Stirring is one of the most important of all microwaving techniques. In conventional cooking, foods are stirred for the purpose of blending. Microwaved foods, however, are stirred in order to spread and redistribute heat. Always stir from the outside towards the center as the outside food heats first.

Turning over: Large, tall foods such as roasts and whole chickens should be turned so that the top and bottom will cook evenly. It is also a good idea to turn cutup chicken and chops.
Placing thicker portions near the edge: Since microwaves are attracted to the outside portion of foods, it makes sense to place thicker portions of meat, poultry and fish to the outer edge of the baking dish. This way, thicker portions will receive the most microwave energy and the foods will cook evenly.

Elevating: Thick or dense foods are often elevated so that microwaves can be absorbed by the underside and center of the foods.

Piercing:Foods enclosed in a shell, skin, or membrane are likely to burst in the oven unless they are pierced prior to cooking. Such foods include both yolks and whites of eggs, clams and oysters, and many whole vegetables and fruits.

Testing if cooked: Because foods cook so quickly in a microwave oven, it is necessary to test food frequently. Some foods are left in the microwave until completely cooked, but most foods, including meats and poultry, are removed from the oven while still slightly undercooked and allowed to finish cooking during standing time. The internal temperature of foods will rise between 5° F (3° C) and 15° F (8° C) during standing time. Standing time: Foods are often allowed to stand for 3 to 10 minutes after being removed from the microwave oven. Usually the foods are covered during standing time to retain heat unless they are supposed to be dry in texture (some cakes and biscuits, for example). Standing allows foods to finish cooking and also helps flavors to blend and develop.

HOW FOOD CHARACTERISTICS AFFECT MICROWAVE COOKING

Density of foods: Light, porous food like cakes and breads cook more quickly than heavy, dense foods such as roasts and casseroles. You must take care when microwaving porous foods that the outer edges do not become dry and brittle.

Height of foods: The upper portion of tall foods, particularly roasts, will cook more quickly than the lower portion. Therefore, it is wise to turn tall foods during cooking, sometimes several times.

Moisture content of foods: Since the heat generated from microwaves tends to evaporate moisture, relatively dry foods such as roasts and some vegetables should either be sprinkled with water prior to cooking or covered to retain moisture.

Bone and fat content of foods: Bones conduct heat and fat cooks more quickly than meat. Therefore, care must be taken when cooking bony or fatty cuts of meat that the meats do not cook unevenly and do not become overcooked.

NOTE: It is a common misconception that microwaves cook food from the inside out. This comes from heating filled pastries with a high sugar content, like jelly doughnuts. The pastry is cool but the filling is very hot! If you cook a chicken or a roast, you'll see the outside is cooked first.

Shape of foods: Microwaves penetrate only about 1 inch (2.5 cm) into foods; the interior portion of thick foods is cooked as the heat generated on the outside travels inward. In other words, only the outer edge of any food is actually cooked by microwave energy; the rest is cooked by conduction. It follows then that the worst possible shape for a food that is to be microwaved is a thick cube. The corners will burn long before the center is even warm. Round, thin, and ring shaped foods cook most successfully in the microwave.

Quantity of foods: The number of microwaves in your oven remains constant regardless of how much food is being cooked. Therefore, the more food you place in the oven, the longer the cooking time. Remember to decrease cooking times by at least one-third when halving a recipe.

Features

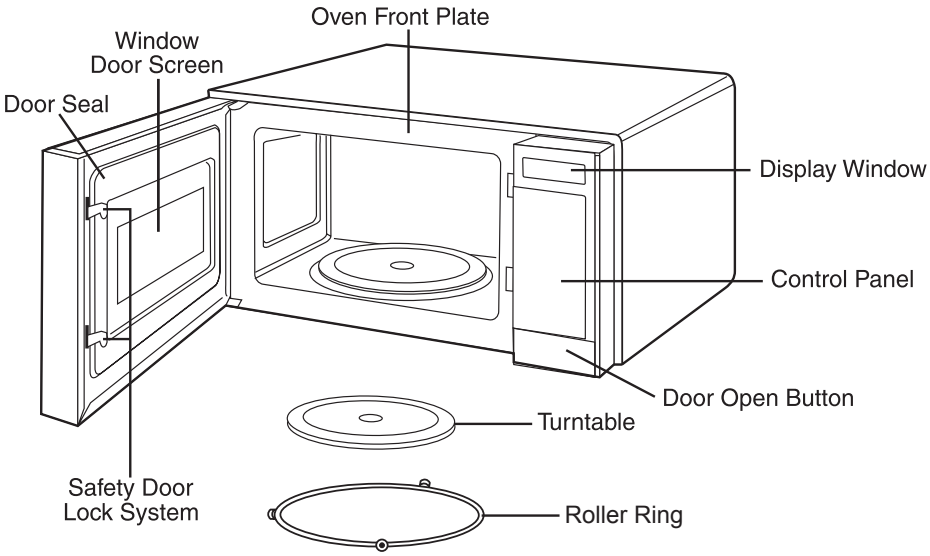

OVEN SPECIFICATIONS

Power Supply	120 VAC, 60 Hz
Input Power	1,550 W
Cooking Power	1,100 W (IEC 60705 Standard)
Frequency	2,450 MHz
Rated Current	13.5 A
Outer Dimensions (WxHxD)	23 21/32" x 13 17/64" x 18 3/16"
Cavity Volume	2.0 Cu. Ft.
Net Weight	41.4 lbs.

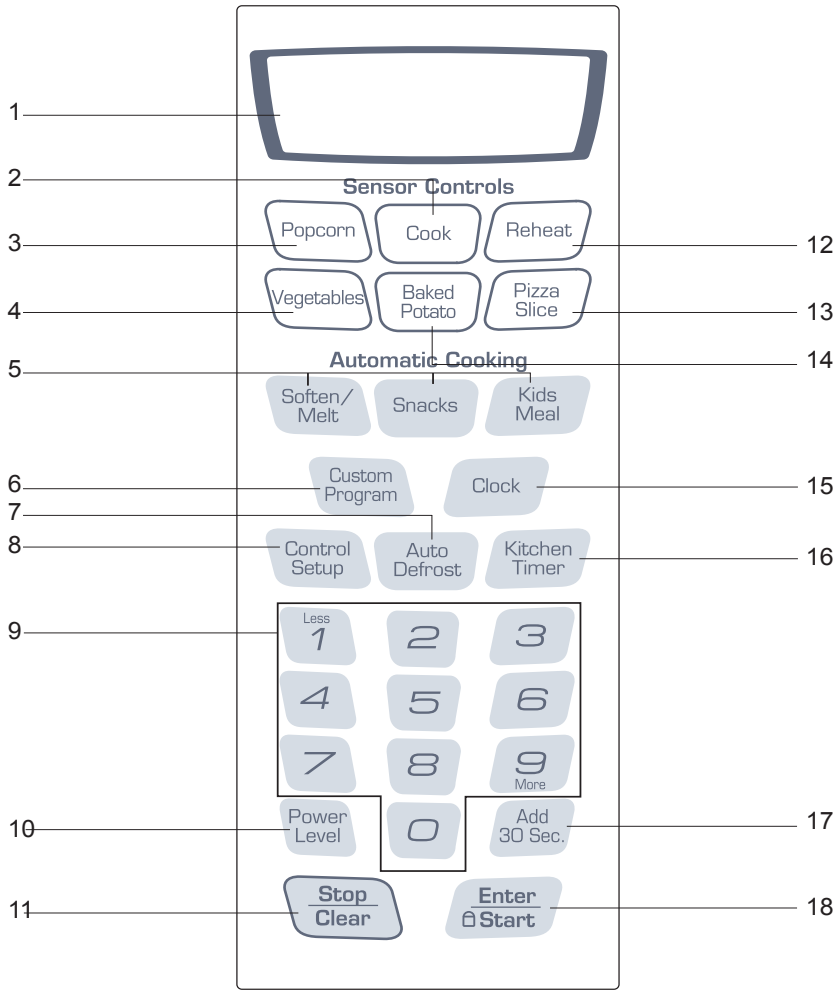

FEATURES

1. **DISPLAY:** The Display includes a clock and indicators to tell you time of day, cooking time settings and cooking functions selected.
2. **COOK:** Touch this pad to cook rice, frozen dinner, frozen breakfast, chicken breast. The oven's sensor will tell the oven how long to cook depending on the amount of humidity coming from the food. See page 13 for more information.
3. **POPCORN:** Touch this pad when popping popcorn in your microwave oven. The oven's sensor will tell the oven how long to cook depending on the amount of humidity it detects from the popcorn. See page 12 for more information.
4. **VEGETABLES:** Touch this pad to cook vegetables. The oven's sensor will tell the oven how long to cook depending on the amount of humidity it detects from the vegetables. See page 13 for more information.

Features

5. **SOTFEN/MELT, SNACKS, KIDS MEALS:** Touch this pad to cook specific food with high frequency of cooking. See page 15 for more information.
6. **CUSTOM PROGRAM:** Touch this pad to recall one cooking instruction previously programmed into memory. See page 10 for more information.
7. **AUTO DEFROST:** Touch this pad to defrost food by weight. See page 17 for more information.
8. **KITCHEN TIMER:** Touch this pad to set the kitchen timer. See page 9 for more information.
9. **NUMBER:** Touch number pads to enter cooking time, power level, quantities, or weights.
10. **POWER LEVEL:** Touch this pad to select a cooking power level.
11 . **STOP/CLEAR:** Touch this pad to stop the oven or to clear all entries.
12. **REHEAT:** Touch this pad to reheat Plate of meal, casserole, and pasta. The oven's sensor will tell the oven how long to cook depending on the amount of humidity coming from the food. See page 13 for more information.
13. **PIZZA SLICE:** Touch this pad to reheat pizza. The oven's sensor will tell the oven how long to cook depending on the amount of humidity it detects. See page 12 for more information.
14. **BAKED POTATO:** Touch this pad to cook potatoes. The oven's sensor will tell the oven how long to cook depending on the amount of humidity it detects from the potato. See page 13 for more information.
15. **CLOCK:** Touch this pad to enter the time of day. See page 9 for more information.
16. **CONTROL SETUP:** Touch this pad to change the oven's default settings. See page 9 for more information.
17. **ADD 30 SEC:** Touch this pad to set and start quickly at 100% power level. See page 9 for more information.

NOTE:

- This option is not available in sensor cook and defrost modes.

18. **ENTER/START:** Touch this pad to start a function. If you open the door after oven begins to cook, touch ENTER/START again.

Operating Instructions

LEARN ABOUT YOUR MICROWAVE OVEN

This section discusses the concepts behind microwave cooking and introduces you to the basics you need to know to operate your microwave oven. Please read this information before use.

⚠ CAUTION

- To avoid risk of personal injury or property damage, do not run oven empty.
- To avoid risk of personal injury or property damage, do not use stoneware, aluminum foil, metal utensils, or metal trimmed utensils in the oven.

CLOCK

Example: To set 8:00 AM.

Clock — 1. Touch **CLOCK** pad.

8 0 0 — 2. Enter the time by using the number key pad.

ENTER/START — 3. Touch **ENTER/START** pad.

1 Less 2 — 4. Touch **1** for AM, **2** for PM.

ENTER/START — 5. Touch **ENTER/START** pad.

NOTE:

- Step 1~3 above in the 24 hour clock mode.

KITCHEN TIMER

You can use your microwave oven as a timer. Use the Timer for timing up to 99 minutes, 99 seconds.

Example: To set for 3 minutes.

Kitchen Timer — 1. Touch **KITCHEN TIMER** pad.

3 0 0 — 2. Enter the time by using the number key pad.

ENTER/START — 3. Touch **ENTER/START** pad. When the time is over, you will hear beeps and **END** will display.

CONTROL SETUP

You can change the default values.

See following chart for more information.

No.	Function	No.	Result
1	Weight mode selected	1 2	Lbs. Kg.
2	Beep ON/OFF control	1 2	Sound ON Sound OFF
3	Clock display control	1 2	12HR 24HR
4	Display	1 2 3	Slow speed Nomal speed Fast speed
5	Remind end Signal	1 2	ON OFF
6	Demo Mode	1 2	ON OFF
7	Daylight Saving Time	1 2	ON OFF
8	Language	1 2	English Spanish

Example: To change weight mode (from Lbs. to Kg).

Control Setup — 1. Touch **CONTROL SETUP** pad.

1 Less — 2. Touch number **1** pad.

2 — 3. Touch number **2** pad.

CHILD LOCK

You may lock the control panel to prevent the microwave from being accidentally started or used by children.

The Child Lock feature is also useful when cleaning the control panel. Child Lock prevents accidental programming when wiping the control panel.

Example: To set the child lock.

STOP/CLEAR — 1. Touch **STOP/CLEAR** pad.

ENTER/START — 2. Touch and hold **ENTER/START** pad more than **3** seconds. **CHILD LOCK ON** will appear in the display window with two beeps.

Example: To cancel the child lock.

ENTER/START — 1. Touch and hold **ENTER/START** pad more than **3** seconds. **LOCKED** will disappear and you hear two beeps.

ADD 30 SEC.

A time-saving pad, this simplified control lets you quickly set and start microwave cooking without the need to touch the **ENTER/ START** pad.

Example: To set ADD 30 SEC. for 2 minutes.

Add 30 Sec. — 1. Touch **ADD 30 SEC**. pad 4 times. The oven begins cooking and display shows time counting down.

Operating Instructions

CUSTOM PROGRAM

CUSTOM PROGRAM lets you recall one cooking instruction previously placed in memory and begin cooking quickly.

Example: To cook for 2 minutes at 70% power.

Custom Program — 1. Touch **CUSTOM PROGRAM** pad.

2 0 0 — 2. Enter the cook time.

Power Level — 3. Touch **POWER LEVEL** pad.

7 — 4. Enter the power level.

ENTER/START — 5. Touch **ENTER/START** pad.

Example: To recall the custom program.

Custom Program — 1. Touch **CUSTOM PROGRAM** pad.

ENTER/START — 2. Touch **ENTER/START** pad. When the cook time is over, you will hear four beeps and END will display.

MORE/LESS

By using the **MORE** or **LESS** keys, all of the pre-programmed cook and time cook features can be adjusted to cook food for a longer or shorter time.

1 Less — 1. Pressing **MORE** will add 10 seconds of cooking time each time you press it.

9 More — 2. Pressing **LESS** will subtract 10 seconds of cooking time each time you press it.

COOKING AT HIGH POWER LEVELS

Example: To cook food for 8 minutes 30 seconds at 100% power.

8 3 0 — 1. Enter the cook time.

ENTER/START — 2. Touch **ENTER/START** pad.

When the cook time is over, you will hear four beeps and **END** will display.

COOKING AT LOWER POWER LEVELS

HIGH power cooking does not always give you the best results with foods that need slower cooking, such as roasts, baked goods, or custards. Your oven has 10 power settings in addition to HIGH.

Example: To cook food for 7 minutes 30 seconds at 70% power.

7 3 0 — 1. Enter the cook time.

Power Level — 2. Touch **POWER LEVEL** pad.

7 — 3. Enter the power level.

ENTER/START — 4. Touch **ENTER/START** pad. When the cook time is over, you will hear four beeps and **END** will display.

See cooking guide for Power levels, page 11.

COOKING WITH MORE THAN ONE COOK CYCLE

For best results, some recipes call for one Power Level for a certain length of time, and another Power Level for another length of time. Your oven can be set to change from one to another automatically, for up to three cycles if the first heating cycle is defrost.

Example: To cook food for 3 minutes at 100% power and then 70% power for 7 minutes 30 seconds.

3 0 0 — 1. Enter the first cook time.

Power Level — 2. Touch **POWER LEVEL** pad.

1 Less 0 — 3. Enter the power level.

7 3 0 — 4. Enter the second cook time.

Power Level — 5. Touch **POWER LEVEL** pad.

7 — 6. Enter the power level.

ENTER/START — 7. Touch **ENTER/START** pad.

When the cook time is over, you will hear four beeps and **END** will display.

Operating Instructions

COOKING GUIDE FOR LOWER POWER LEVELS

The 10 power levels in addition to HIGH allow you to choose the best power level for the food you are cooking. Below are listed all the power levels, examples of foods best cooked at each level, and the amount of microwave power you are using.

POWER LEVEL	MICROWAVE OUTPUT	USE
10 High	100%	• Boil water. • Cook ground beef. • Make candy. • Cook fresh fruits and vegetables. • Cook fish and poultry. • Preheat browning dish. • Reheat beverages. • Bacon slices. Place utensil on metal oven rack.
9	90%	• Reheat meat slices quickly. • Saute onions, celery, and green pepper.
8	80%	• All reheating. • Cook scrambled eggs.
7	70%	• Cook breads and cereal products. • Cook cheese dishes, veal. • Cook cakes, muffins, brownies, cupcakes.
6	60%	• Cook pasta.
5	50%	• Cook meats, whole poultry. • Cook custard. • Cook whole chicken, turkey, spare ribs, rib roast, sirloin roast.
4	40%	• Cook less tender cuts of meat. • Reheat frozen convenience foods.
3	30%	• Thaw meat, poultry, and seafood. • Cook small quantities of food. • Finish cooking casserole, stew, and some sauces.
2	20%	• Soften butter and cream cheese. • Heat small amounts of food.
1	10%	• Soften ice cream. • Raise yeast dough.

Operating Instructions

SENSOR OPERATING INSTRUCTIONS

Sensor Cook allows you to cook most of your favorite foods without selecting cooking times and power levels. The display will indicate SENSING during the initial sensing period. The oven automatically determines required cooking time for each food item. When the internal sensor detects a certain amount of humidity coming from the food, it will tell the oven how much longer to heat. The display will show the remaining heating time. For best results for cooking by Sensor, follow these recommendations:

1. Food cooked with the sensor system should be at normal storage temperature.
2. Glass turntable and outside of container should be dry to assure best cooking results.
3. Foods should always be covered loosely with microwavable plastic wrap, waxed paper, or a lid.
4. Do not open the door or touch the STOP/CLEAR pad during the sensing time. When sensing time is over, the oven beeps twice and the remaining cooking time will appear in the display window. At this time you can open the door to stir, turn, or rearrange the food.

SENSOR COOKING GUIDE

Appropriate containers and coverings help assure good Sensor cooking results.

1. Always use microwavable containers and cover them with lids or vented plastic wrap.
2. Never use tight-sealing plastic covers. They can prevent steam from escaping and cause food to overcook.
3. Match the amount to the size of the container. Fill containers at least half full for best results.
4. Be sure the outside of the cooking container and the inside of the microwave oven are dry before placing food in the oven. Beads of moisture turning into steam can mislead the sensor.

ADDING OR SUBTRACTING COOK TIME

By using the **MORE** or **LESS** pads all of the sensor cook and time cook settings can be adjusted to cook food for a longer or shorter time.

POPCORN

POPCORN lets you pop commercially packaged microwave popcorn. Pop only one package at a time. For best results, use fresh bags of popcorn.

Example: To pop popcorn

Popcorn

1. Touch **POPCORN** pad. When the cook time is over, you will hear four beeps and **END** will display.

- Recommended amounts: 3.0-3.5 ozs.

PIZZA SLICE

Reheating pizza with PIZZA SLICE lets you reheat one or several slices of pizza without selecting cooking times and power levels.

Example: To reheat 2 slices of pizza.

Pizza Slice

1. Touch **PIZZA SLICE** pad. When the cook time is over, you will hear four beeps and **END** will display.

- Recommended amounts: 1-4 slices.

Operating Instructions

BAKED POTATO

The BAKED POTATO pad lets you bake one or several potatoes without selecting cooking times and power levels.

NOTES:

- Before baking, pierce potato with fork several times.
- After baking, let stand for 5 minutes.

Example: To cook 2 potatoes.

Baked Potato

1. Touch **BAKED POTATO** pad. When the cook time is over, you will hear four beeps and **END** will display.

- Recommended amounts: 1-6 potatoes.

VEGETABLE

VEGETABLES have preset cook powers for 2 food categories: **Fresh, Frozen.**

Example: To cook Frozen Vegetables.

Vegetables

1. Touch **VEGETABLES** pad.

2

2. Choose food category.

Category	Touch Pad Number
Fresh	1
Frozen	2

When the cook time is over, you will hear four beeps and **END** will display.

COOK

Using COOK lets you heat common microwave-prepared foods without needing to program times and Cook Powers. COOK has preset Cook Power for 4 food categories: **Rice, Frozen Dinner, Frozen Breakfast, Chicken Breast.**

Example: To cook Frozen Breakfast.

Cook

1. Touch **COOK** pad.

3

2. Choose food category.

Category	Touch Pad Number
Rice	1
Frozen Dinner	2
Frozen Breakfast	3
Chicken Breast	4

When the cook time is over, you will hear four beeps and **END** will display.

Recommended amounts:

Rice	8-16 ozs.
Frozen Dinner	8-14 ozs.
Frozen Breakfast	4-8 ozs.
Chicken Breast	8-24 ozs.

REHEAT

REHEAT lets you heat foods without needing to program times and Cook Powers. REHEAT has preset Cook Powers for 3 categories: **Plate of meal, Casserole, and Pasta reheat.**

Example: To reheat Casserole.

Reheat

1. Touch **REHEAT** pad.

2

2. Choose food category.

Category	Touch Pad Number
Plate of meal	1
Casserole	2
Pasta reheat	3

When the cook time is over, you will hear four beeps and **END** will display.

Recommended amounts:

Plate of meal	1 serving
Casserole	1-4 servings
Pasta reheat	1-4 sevings

Operating Instructions

SENSOR COOK TABLE

CATEGORY		DIRECTIONS	AMOUNT
Popcorn		Use only one microwave-only bag of popcorn at a time. Use caution when removing and opening the hot bag from oven. Let oven cool for at least 5 minutes before using again.	3.0~3.5 oz 1package.
Potato		Prick each potato several times with fork. Place on turntable in spoke-like fashion. Let stand 3-5minutes. Let oven cool for at least 5 minutes before using again.	1 to 6 potatoes.
VEGETABLES	Fresh Vegetables	Place fresh vegetables in microwave-safe ceramic, glass or plastic dish and add 2~4 Tbs. water. Cover with lid or vented plastic wrap during cooking and stir before standing. Let oven cool for at least 5 minutes before using again.	1 to 4 servings.
VEGETABLES	Frozen Vegetables	Place frozen vegetables in microwave-safe ceramic, glass or plastic dish and add 2~4 Tbs. water. Cover with lid or vented plastic wrap during cooking and stir before standing. Let oven cool for at least 5 minutes before using again.	1 to 4 servings.
COOK	Beverage	Use measuring cup or mug ; do not cover. Place the beverage in the oven. After heating, stir well. Let oven cool for at least 5 minutes before using again.	8 oz.
COOK	Frozen Dinner	Remove food from outer wrapping and follow box instructions for covering and standing. Let oven cool for at least 5 miniutes before using again.	8 to 14 oz.
COOK	Frozen Breakfast	Follow package instructions for covering and standing. Use this pad for frozen sandwich, breakfast entree, pancakes, waffles, etc. Let oven cool for at least 5 miniutes before using again.	4 to 8 oz.
COOK	Chicken Breast	Place chicken breasts on a microwave safe plate and cover with plastic warp. Cook to an internal temperature of 170 degrees F. Let stand 5 minutes. Use the MORE pad to increase cooking time for larger or thicker chicken breasts.	8 to 16 oz.
COOK	Pizza slice	Put 1~3 slices of pizza on a micorwave-safe plate with wide end of slice towords the outside edge of the plate. Do not let slices overlap. Do not cover. Let oven cool for at least 5 miniutes before using again. Use more pad to incease reheat time for thick crust pizza.	1 to 4 Slices

SENSOR REHEAT TABLE

CATEGORY	DIRECTIONS	AMOUNT
Plate of meal	Use only pre-cooked, refrigerated foods. Cover plate with vented plastic wrap or waxed paper, turcked under plate. If food is not as hot as you prefer after heating with SENSOR REHEAT, continue heating using time and power. Contents - 3~4 oz. meat, poultry or fish(up to 6 oz. with bone) - 1/2 cup starch (potatoes, pasta, rice, etc.) - 1/2 cup vegetables (about 3~4 oz.)	1 serving (1 plate)
Casserole	Cover plate with lid or vented plastic wrap. If food is not as hot as you prefer after heating with SENSOR REHEAT, continue heating using time and power. Stir foods once before serving. Contents - Casserole-refrigerated foods. - Pasta-Canned spaghetti and ravioli.	1 to 4 servings.
Pasta Reheat		

Notes:
Desired food temperature varies from person to person.
Use the **More/Less** buttons to fit your temperature preference.

Operating Instructions

USING THE SOFTEN/MELT BUTOON

1. Press the **Soften/Melt button** corresponding to the food you are cooking. The display shows “Melt Chocolate". Press the **Soften/Melt button** repeatedly to select the item you want.(Refer to the **Soften/Melt Chart** below)
2. Press the **Number** button to select the serving size you want. You can press the **1** or **2** button to select the serving size. Only the **1** button(serving) is available for Soften Cream Cheese and Melt Chocolate items.(Refer to the **Soften/ Melt Chart** below for the serving)
3. Press the **Start** button to begin cooking.

SOFTEN/MELT CHART

Item	Weight	Remarks
Melt Chocolate	2 squares or 1 cup chips	• Place chocolate chips or square in a microwave-safe dish. • Stir well at half time when the oven beeps, and re-start the oven. • Unless stirred, the chocolate keeps its shape even when heating time is over.
Soften Cream Cheese	1 package (8 oz.)	• Unwrap cream cheese and place on microwave-safe dish. • Let stand 1-2 min.
Melt Butter	1 stick (1/4 lb.)	• Remove wrapping and cut butter in half vertically.
	2 sticks (1/2 lb.)	• Place butter in dish, cover with wax paper. • Stir well after finishing and let stand 1-2 min.

USING THE KIDS MEALS BUTTONS

1. Press the **Kids Meals** button corresponding to the food you are cooking. The display shows “Chicken Nuggets”. Press the **Kids Meals** button repeatedly to select the item you want.(Refer to the **Kids Meals Chart** below)
2. Press the **Number** button to select the serving size you want. You can press the **1** or **2** button to select the serving size.(Refer to the **Kids Meals Chart** below for the serving.)
3. Press the **Start** button to begin cooking.

KIDS MEAL CHART

Item	Weight	Remarks
Chicken Nuggets	4-5 oz 6-7 oz	• Put a paper towel on top of plate and arrange nuggets in spoke fashion on paper towel. • Do not cover. Let stand 1 min.
Hot Dogs	2 EA 4 EA	• Prick hot dogs, place on plate. When the oven beeps, add buns and re-start the oven.
French Fries	4-5 oz 6-7 oz	• Place 2 paper towels on plate and arrange french fries on towels, do not overlap. • Blot with additional paper towel after removal from oven.
Frozen Sandwich	1 EA 2 EA	• Place frozen sandwich in susceptor “sleeve” (which is in package) and put on plate.

Operating Instructions

USING SNACK BAR BUTTONS

1. Press the **Snack Bar** button corresponding to the food you are cooking. The display shows “Nachos”
   Press the **Snack Bar** button repeated to select the item you want.(Refer to the **Snack Bar** Chart below)
2. Press the **Number** button to select the serving size you want.
   You can press the **1** or **2** button to select the serving size.
   Only the **1** button(serving) is available for Nachos.(Refer to the **Snack Bar Chart** below for the serving)
3. Press the **Start** button to begin cooking.

SNACK BAR CHART

Item	Weight	Remarks
Nachos	1 serving	• Place tortilla chips on plate without overlapping. • Sprinkle evenly with cheese. • Contents : - 2 cups tortilla chips - 1/3 cup grated cheese
Chicken Wings	5-6 oz 7-8 oz	• Use pre-cooked, refrigerated chicken wings. • Place chicken wings around plate in spoke fashion and cover with wax paper.
Potato Skins	1 cooked potato 2 cooked potatoes	• Cut cooked potato into 4 even wedges. Scoop or cut out potato flesh, leaving about 1/4” of skin. • Place skins in spoke fashion around plate. • Sprinkle with bacon, onions and cheese. Do not cover.
Cheese Sticks	5-6 pcs 7-10 pcs	• Place cheese sticks on plate in spoke fashion. • Do not cover.

Operating Instructions

AUTO DEFROST

Dfrost choices are preset in the oven. The defrost feature provides you with the best defrosting method for frozen foods, because the oven automatically sets the defrosting times according to the weight you enter. For added convenience, the AUTO DEFROST includes a built-in tone mechanism that reminds you to check or turn over the food during the defrost cycle.

After touching the AUTO DEFROST once, select the food weight. Available weight ranges are 0.1 to 6.0 lbs.

Example : To defrost 1.2 lbs of meat.

Reheat

2

ENTER
START

1. Touch **AUTO DEFROST** pad.
2. Enter the weight.
3. Touch **ENTER/ START** pad.

NOTES:

- After you touch ENTER/ START, the display counts down the defrost time. The oven will beep once during the Defrost cycle. At this time, open the door and turn the food as needed. Remove any portions that have thawed then return frozen portions to the oven and touch ENTER/START to resume the defrost cycle.
- **The oven will not stop during the BEEP unless the door is opened.**

DEFROSTING GUIDE

- Follow the instructions below when defrosting different types of food.

Food	Standard Amount	Procedure
Roast Beef, pork	2.5~6.0 lbs.	Start with the food placed fat side down. After each stage, turn the food over and shield any warm portions with narrow strips of aluminum foil.
Steaks, Chops, fish	0.5~3.0 lbs.	After each stage, rearrange the food. If there are any warm or thawed portions of food, sheild them with narrow flat pieces of aluminum foil. Remove any pieces of food that are nearly defrosted. Let stand, covered, for 5-10 minutes
Groud Meat	0.5~3.0 lbs.	After each stage, remove any pieces of food that are nealy defrosted. Let stand, covered with foil, for 5-10 minutes.
Whole Chicken	2.5~6.0 lbs.	Remove giblets before freezing poulty. Start defrosting with the beast side down. After the first stage, turn the chicken over and shield any warm portions with narrow strips of aluminum foil. After the second stage, again sheild any warm portions with narrow strips of aluminum foril. Let stand, covered for 30-60 minutes in the refrigerator.
Chicken Pieces	0.5~3.0 lbs.	After each stage, rearrange or remove any pieces of food that are nearly defrosted. Let stand for 10-20 minutes.

DEFROST TIPS

- When using AUTO DEFROST, the weight to be entered is the net weight in pounds and tenths of pounds (the weight of the food minus the container).
- Use AUTO DEFROST only for raw food. AUTO DEFROST gives best results when food to be thawed is a minimum of 0°F (taken directly from a true freezer). If food has been stored in a refrigerator-freezer that does not maintain a temperature of 5°F or below, always program a lower food weight (for a shorter defrosting time) to prevent cooking the food.
- If the food is stored outside the freezer for up to 20 minutes, enter a lower food weight.
- The shape of the package alters the defrosting time. Shallow rectangular packets defrost more quickly than a deep block.
- Separate pieces as they begin to defrost. Separated pieces defrost more easily.
- You can use small pieces of aluminum foil to shield foods like chicken wings, leg tips, and fish tails, but the foil must not touch the side of the oven. Foil causes arcing, which can damage the oven lining.
- Shield areas of food with small pieces of foil if they start to become warm.

Operating Instructions

GETTING THE BEST COOKING RESULTS

To get the best results from your microwave oven, read and follow the guidelines below.

- **Storage Temperature:** Foods taken from the freezer or refrigerator take longer to cook than the same foods at room temperature.

  The time for recipes in this book is based on the normal storage temperature of the food.
- **Size:** Small pieces of food cook faster than large ones, pieces similar in size and shape cook more evenly. For even cooking, reduce the power when cooking large pieces of food.
- **Natural Moisture:** Very moist foods cook more evenly because microwave energy is attracted to water molecules.
- **Stir** foods such as casseroles and vegetables from the outside to the center to distribute the heat evenly and speed cooking. Constant stirring is not necessary.
- **Turn over** foods like pork chops, baking potatoes, roasts, or whole cauliflower halfway through the cooking time to expose all sides equally to microwave energy.
- **Place** delicate areas of foods, such as asparagus tips, toward the center of the dish.
- **Arrange** unevenly shaped foods, such as chicken pieces or salmon steaks, with the thicker, meatier parts toward the outside of the dish.
- **Shield,** with **small** pieces of aluminum foil, parts of food that may cook quickly, such as wing tips and leg ends of poultry.
- **Let It Stand:** After you remove the food from the microwave, cover food with foil or casserole lid and let it stand to finish cooking in the center and avoid overcooking the outer edges. The length of standing time depends on the density and surface area of the food.
- **Wrapping in waxed paper or paper towel:** Sandwiches and many other foods containing prebaked bread should be wrapped prior to microwaving to prevent drying out.

Operating Instructions

COOKING GUIDE

Guide for Cooking Meat in Your Microwave

- Place meat on a microwave-safe roasting rack in a microwave-safe dish.
- Start meat fat-side down. Use narrow strips of aluminum foil to shield any bone tips or thin meat areas.
- Check the temperature in several places before letting the meat stand the recommended time.
- The following temperatures are removal temperatures. The temperature of the food will rise during the standing time.

Food	Cook time	Power level	Directions
Roast Beef Boneless (Up to 4 lbs.)	7-11 min./lb. for 145° F **(Rare)**	High(0) for first 5 minutes, then medium(5)	Place roast fat-side down on roasting rack. Cover with wax paper. Turn over half way through cooking. Let stand 10 minutes.
	8-12 min./lb. for 160° F **(Medium)**		
	9-14 min./lb. for 170° F **(Well Done)**		
Pork Boneless or bone-in (Up to 4 lbs.)	11-15 min./lb. for 170° F **(Well Done)**	High(0) for first 5 minutes, then medium(5)	Place roast fat-side down on roasting rack. Cover with wax paper. Turn over half way through cooking. Let stand 10 minutes.

- Expect a 10°F rise in temperature during the standing time.

Food		Remove from oven	After standing (10 min.)
Beef	**Rare**	135°F	145°F
	Medium	150°F	160°F
	Well Done	160°F	170°F
Pork	**Medium**	150°F	160°F
	Well Done	160°F	170°F
Poultry	**Dark meat**	170°F	180°F
	Light meat	160°F	170°F

Guide for Cooking Poultry in Your Microwave

- Place poultry on a microwave-safe roasting rack in a microwave-safe dish.
- Cover poultry with wax paper to prevent spattering.
- Use aluminum foil to shield bone tips, thin meat areas, or areas that start to overcook.
- Check the temperature in several places before letting the poultry stand the recommended time.

Food	Cook Time/Power Level	Directions
Whole Chicken Up to 4 lbs.	Cooking Time: 6-9 min. / lb. 180°F dark meat 170°F light meat Power Level: Medium High(7).	Place chicken breast-side down on roasting rack. Cover with wax paper. Turn over half way through cooking. Cook until juices run clear and meat near the bone is no longer pink. Let stand 5-10 minutes.
Chicken Pieces Up to 2 lbs.	Cooking Time: 6-9 min. / lb. 180°F dark meat 170°F light meat Power Level: Medium High(7).	Place chicken bone-side down on dish, with the thickest portions towards the outside of the dish. Cover with wax paper. Turn over half way through cooking. Cook until juices run clear and meat near the bone is no longer pink. Let stand 5-10 minutes.

Operating Instructions

Guide for Cooking Seafood in Your Microwave

- Cook fish until it flakes easily with a fork.
- Place fish on a microwave-safe roasting rack in a microwave-safe dish.
- Use a tight cover to steam fish. A lighter cover of wax paper or paper towel provides less steaming.
- Do not overcook fish; check it at minimum cooking time.

Food	Cook Time/Power Level	Directions
Steaks Up to 1.5 lbs.	Cooking Time: 6-10 min. / lb. Power Level: Medium-High(7).	Arrange steaks on roasting rack with meaty portions towards the outside of rack. Cover with wax paper. Turn over and rearrange when cooking time is half up. Cook until fish flakes easily with a fork. Let stand 3-5 minutes.
Fillets Up to 1.5 lbs.	Cooking Time: 3-7 min. / lb Power Level:Medium-High(7).	Arrange fillets in a baking dish, turning any thin pieces under. Cover with wax paper. If over ? inch thick, turn over and rearrange when cooking time is half up. Cook until fish flakes easily with a fork. Let stand 2-3 minutes.
Shrimp Up to 1.5 lbs.	Cooking Time: 3-5 ½ min. / lb. Power Level: Medium-High(7).	Arrange shrimp in a baking dish without overlapping or layering. Cover with wax paper. Cook until firm and opaque, stirring 2 or 3 times. Let stand 5 minutes.

Guide for Cooking Eggs in Your Microwave

- Never cook eggs in the shell, and never warm hard-cooked eggs in the shell; they can explode.
- Always pierce whole eggs to keep them from bursting.
- Cook eggs just until set; they become tough if overcooked.

Guide for Cooking Vegetables in Your Microwave

- Vegetables should be washed just before cooking. Often, no extra water is needed. If dense vegetables such as potatoes, carrots and green beans are being cooked, add about ? cup water.
- Small vegetables (sliced carrots, peas, lima beans, etc.) will cook faster than larger ones.
- Whole vegetables, such as potatoes, acorn squash or corn on the cob, should be arranged in a circle on the turntable before cooking. They will cook more evenly if turned over after half the cooking time has passed.
- Always place vegetables like asparagus and broccoli with the stem ends pointing towards the edge of the dish and the tips toward the center.
- When cooking cut vegetables, always cover the dish with a lid or vented microwavable plastic wrap.
- Whole, unpeeled vegetables such as potatoes, squash, eggplant, etc., should have their skin pricked in several spots before cooking to prevent them from bursting.
- For more even cooking, stir or rearrange whole vegetables halfway through the cooking time.
- Generally, the denser the food, the longer the standing time. (Standing time refers to the time necessary for dense, large foods and vegetables to finish cooking after they come out of the oven.) A baked potato can stand on the counter for five minutes before cooking is completed, while a dish of peas can be served immediately.

Care and Cleaning

CARE AND CLEANING

For best performance and safety, keep the oven clean inside and out-side. Take special care to keep the inner door panel and the oven front frame free of food or grease build-up. Never use rough powder or pads. Wipe the microwave oven inside and out, including the hood bottom cover, with a soft cloth and a warm (not hot) mild detergent solution. Then rinse and wipe dry. Use a chrome cleaner and polish on chrome, metal and aluminum surfaces. Wipe spatters immediately with a wet paper towel, especially after cooking chicken or bacon. Clean your oven weekly or more often, if needed.

Cooking Utensils

MICROWAVE UTENSIL GUIDE

USE	DO NOT USE
OVENPROOF GLASS (treated for high intensity heat)**:** Utility dishes, loaf dishes, pie plates, cake plates, liquid measuring cups, casseroles and bowls without metallic trim. **CHINA:** Bowls, cups, serving plates and platters without metallic trim. **PLASTIC:** Plastic wrap (as a cover)-- lay the plastic wrap loosely over the dish and press it to the sides. Vent plastic wrap by turning back one edge slightly to allow excess steam to escape. The dish should be deep enough so that the plastic wrap will not touch the food. As the food heats it may melt the plastic wrap wherever the wrap touches the food. Use plastic dishes, cups, semirigid freezer containers and plastic bags **only for short cooking times. Use these with care because the plastic may soften from the heat of the food.** **PAPER:** Paper towels, waxed paper, paper napkins, and paper plates with no metallic trim or design. Look for the manufacturer's label for use in the microwave oven.	**METAL UTENSILS:** Metal shields the food from microwave energy and produces uneven cooking. Also avoid metal skewers, thermometers or foil trays. Metal utensils can cause arcing, which can damage your microwave oven. **METAL DECORATION:** Metal-trimmed or metal-banded dinnerware, casserole dishes, etc. The metal trim interferes with normal cooking and may damage the oven. **ALUMINUM FOIL:** Avoid large sheets of aluminum foil because they hinder cooking and may cause harmful arcing. Use small pieces of foil to shield poultry legs and wings. Keep ALL aluminum foil at least 1 inch from the side walls and door of the oven. **WOOD:** Wooden bowls and boards will dry out and may split or crack when you use them in the microwave oven. Baskets react in the same way. **TIGHTLY COVERED UTENSILS:** Be sure to leave openings for steam to escape from covered utensils. Pierce plastic pouches of vegetables or other food items before cooking. Tightly closed pouches could explode. **BROWN PAPER:** Avoid using brown paper bags. They absorb too much heat and could burn. **FLAWED OR CHIPPED UTENSILS:** Any utensil that is cracked, flawed, or chipped may break in the oven. **METAL TWIST TIES:** Remove metal twist ties from plastic or paper bags. They become hot and could cause a fire.

Troubleshooting

TROUBLESHOOTING GUIDE

Before you call a repair person for your oven, check this list of possible problems and solutions.

Neither the oven's display nor the oven operate.
- Properly insert the plug into a grounded outlet.
- If the outlet is controlled by a wall switch, make sure the wall switch is turned on.
- Remove the plug from the outlet, wait ten seconds, then plug it in again.
- Reset the circuit breaker or replace any blown fuse.
- Plug another appliance into the outlet; if the other appliance doesn't work, have a qualified electrician repair the outlet.
- Plug the oven into a different outlet.

The oven's display works, but the power won't come on.
- Make sure the door is closed securely.
- Check to see if packing material or other material is stuck to the door seal.
- Check for door damage.
- Press Cancel twice and re-enter all cooking instructions.

The power goes off before the set time has elapsed.
- If there has not been a power outage, remove the plug from the outlet, wait ten seconds, then plug it in again. If there was a power outage, the time indicator will display: **ENJOY YOUR COOKING - - - PRESS OPTION PAD FOR PERSONAL OPTIONS.** Reset the clock and any cooking instructions.
- Reset the circuit breaker or replace any blown fuse.

The food is cooking too slowly.
- Make sure the oven is on its own 20 amp circuit line. Operating another appliance on the same circuit can cause a voltage drop. If necessary, move the oven to its own circuit.

You see sparks or arcing.
- Remove any metallic utensils, cookware, or metal ties. If using foil, use only narrow strips and allow at least one inch between the foil and interior oven walls.

The turntable makes noises or sticks.
- Clean the turntable, roller ring and oven floor.
- Make sure the turntable and roller ring are positioned correctly.

Using your microwave causes TV or radio interference.
- This is similar to the interference caused by other small appliances, such as hair dryers. Move your microwave further away from other appliances, like your TV or radio.

Note:
If the oven is set to cook for more than 25 minutes, it will automatically adjust itself to 70 percent power after 25 minutes to avoid overcooking.

CARE AND CLEANING

Follow these instructions to clean and care for your oven.

- Keep the inside of the oven clean. Food particles and spilled liquids can stick to the oven walls, causing the oven to work less efficiently.
- Wipe up spills immediately. Use a damp cloth and mild soap. Do not use harsh detergents or abrasives.
- To help loosen baked on food particles or liquids, heat two cups of water (add the juice of one lemon if you desire to keep the oven fresh) in a four-cup measuring glass at High power for five minutes or until boiling. Let stand in the oven for one or two minutes.
- Remove the glass tray from the oven when cleaning the oven or tray. To prevent the tray from breaking, handle it carefully and do not put it in water immediately after cooking. Wash the tray carefully in warm sudsy water or in the dishwasher.
- Clean the outside surface of the oven with soap and a damp cloth. Dry with a soft cloth. To prevent damage to the operating parts of the oven, don't let water seep into the openings.
- Wash the door window with very mild soap and water. Be sure to use a soft cloth to avoid scratching.
- If steam accumulates inside or outside the oven door, wipe with a soft cloth. Steam can accumulate when operating the oven in high humidity and in no way indicates microwave leakage.
- Never operate the oven without food in it; this can damage the magnetron tube or glass tray. You may wish to leave a cup of water in the oven when it is not in use to prevent damage if the oven is accidentally turned on.

If you have a problem you cannot solve, please call our service line:
1-800-843-0304 U.S.A.
1-866-587-2002 CANADA

Warranty

Full One Year

Amana will repair or replace, including related labor, any part which proves defective as to workmanship or materials.

Limited Warranty
After one year from the date of original retail purchase, Amana will provide a free part, as listed below, to replace any part that fails due to a defect in materials or workmanship. The owner will be responsible for paying all other costs including labor, mileage, transportation, trip and diagnostic charges, if required.

Second through Fifth Year
Amana will provide replacement magnetron, touch pad and microprocessor, part and labor, which proves defective as to workmanship or materials.

Limited Parts Warranty Outside the United States and Canada

For one (1) year from the date of original retail purchase, any part which fails in normal home use will be repaired or replaced free of charge for the part itself, with the owner paying all other costs, including labor, mileage, transportation, trip and diagnostic charges, if required.

Canadian Residents
This warranty covers only those appliances installed in Canada that have been listed with Canadian Standards Association unless the appliances are brought into Canada due to transfer or residence from the United States to Canada.

What is not covered by these warranties

- Replacement of household fuses, resetting of circuit breakers, or correction to household wiring or plumbing.
- Normal product maintenance and cleaning, including light bulbs.
- Products with original serial numbers removed, altered, or not readily determined.
- Products purchased for commercial, industrial, rental, or leased use.
- Products located outside of the United States or Canada.
- Premium service charges, if the servicer is requested to perform service in addition to normal service or outside normal service hours or area.
- Adjustments after the first year.
- Repairs resulting from the following:
  - Improper installation, exhaust system, or maintenance.
  - Any modification, alteration, or adjustment not authorized by the manufacturer.
  - Accident, misuse, abuse, fire, flood, or acts of nature.
  - Connections to improper electrical current, voltage supply, or gas supply.
  - Use of improper pans, containers, or accessories that cause damage to the product.
- Travel.

If you need service

- Call the dealer from whom your appliance was purchased or call Maytag Services℠, Anama Customer Assistance at **1-800-843-0304**,USA and **1-866-587-2002,** CANADA to locate an authorized servicer.
- Be sure to retain proof of purchase to verify warranty status. Refer to WARRANTY for further information on owner's responsibilities for warranty service.
- If the dealer or service company cannot resolve the problem, write to Maytag Services℠, Attn: CAIR® Center P.O. Box 2370, Cleveland, TN 37320-2370, or call **1-800-834-0304** U.S.A. and **1-866-587-2002** CANADA. U.S. customers using TTY for deaf, hearing impaired or speech impaired, call **1-800-688-2080**.

NOTE:

- When writing or calling about a service problem, please include the following information:
  a. Your name, address and telephone number;
  b. Model number and serial number;
  c. Name and address of your dealer or servicer;
  d. A clear description of the problem you are having;
  e. Proof of purchase (sales receipt).

- User's guides, service manuals and parts information are available from Maytag Services℠, Amana Customer Assistance.

IN NO EVENT SHALL MAYTAG BE LIABLE FOR INCIDENTAL OR CONSEQUENTIAL DAMAGES.

This warranty gives you specific legal rights, and you may have others which vary from state to state. For example, some states do not allow the exclusion or limitation of incidental or consequential damages, so this exclusion may not apply to you.