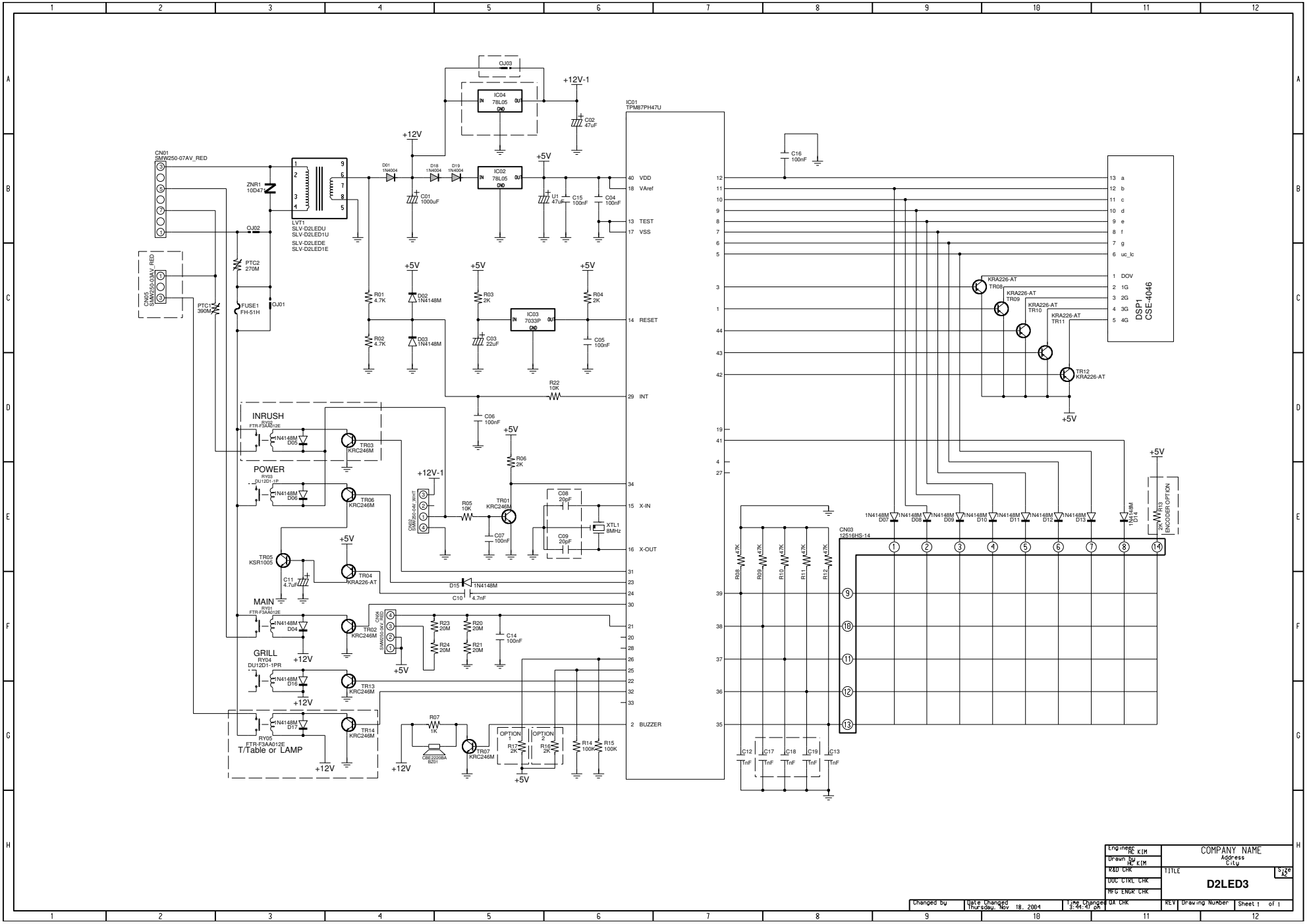

Engineer HC KIM	COMPANY NAME Address City	
Drawn by HC KIM		
R&D CHK	TITLE	Size A2
DOC CTRL CHK	D2LED3	
MFG ENGR CHK		
QA CHK	REV	Drawing Number
Changed by	Date Changed Thursday, Nov 18, 2004	Time Changed 3:44:47 pm
		Sheet 1 of 1

NOTE: CIRCUIT SHOWN WITH DOOR IS OPENED POSITION.
NOTE: FOR SERVICE REPLACEMENT USE 16 GA 105°C
THERMOPLASTIC COVERED WIRE EXCEPT
FOR HIGH VOLTAGE LEADS OR AS NOTED ON SPECIAL LEADS.

WARNING

POWER MUST BE DISCONNECTED
BEFORE SERVICING THIS APPLIANC

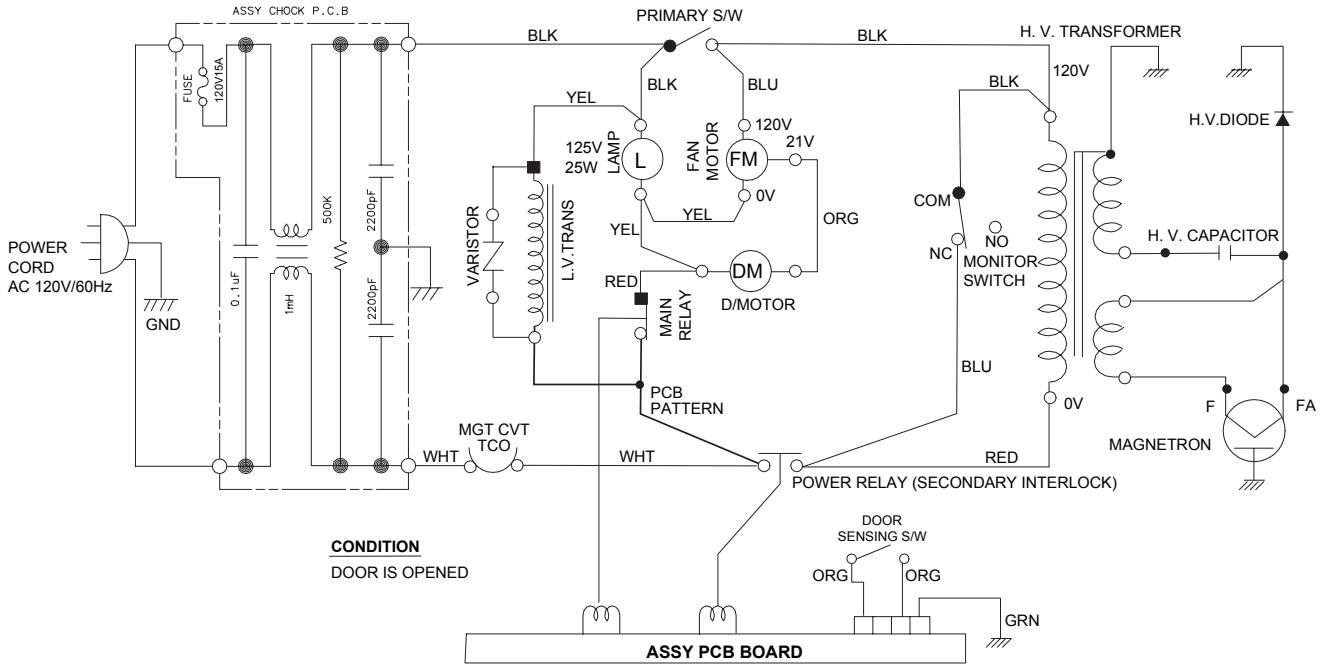

CONDITION

DOOR IS OPENED