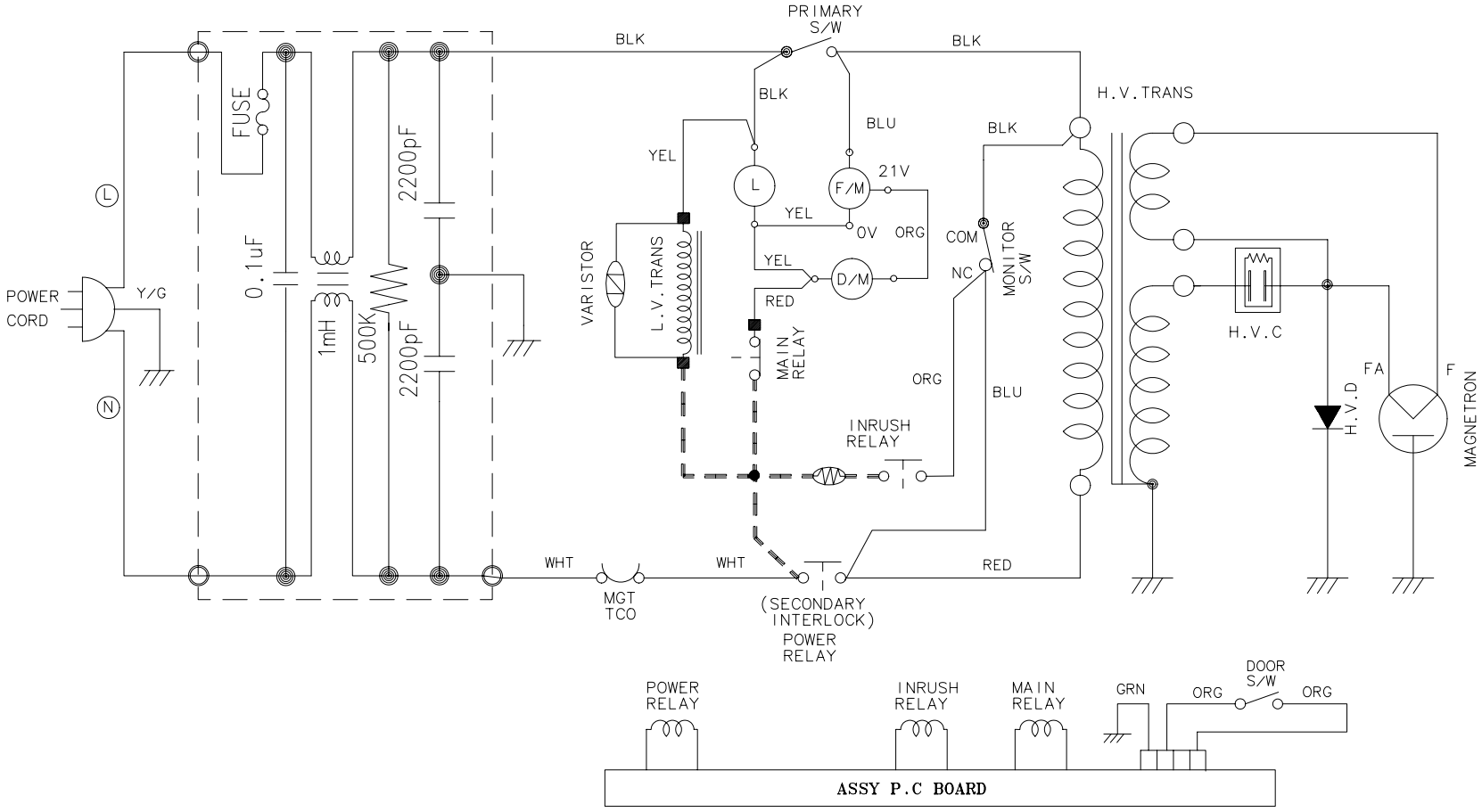
POWER CORD
Y/G
L
N
FUSE
0.1uF
1mH
500K
2200pF
2200pF
BLK
PRIMARY S/W
BLK
BLK
BLU
YEL
L
F/M
21V
YEL
0V
ORG
YEL
D/M
RED
VARISTOR
L.V.TRANS
MAIN RELAY
INRUSH RELAY
ORG
BLU
COM
NC
MONITOR S/W
BLK
H.V.TRANS
H.V.C
H.V.D
FA
F
MAGNETRON
WHT
WHT
RED
MGT TCO
(SECONDARY INTERLOCK)
POWER RELAY
POWER RELAY
INRUSH RELAY
MAIN RELAY
GRN
ORG
DOOR S/W
ORG
ASSY P.C BOARD

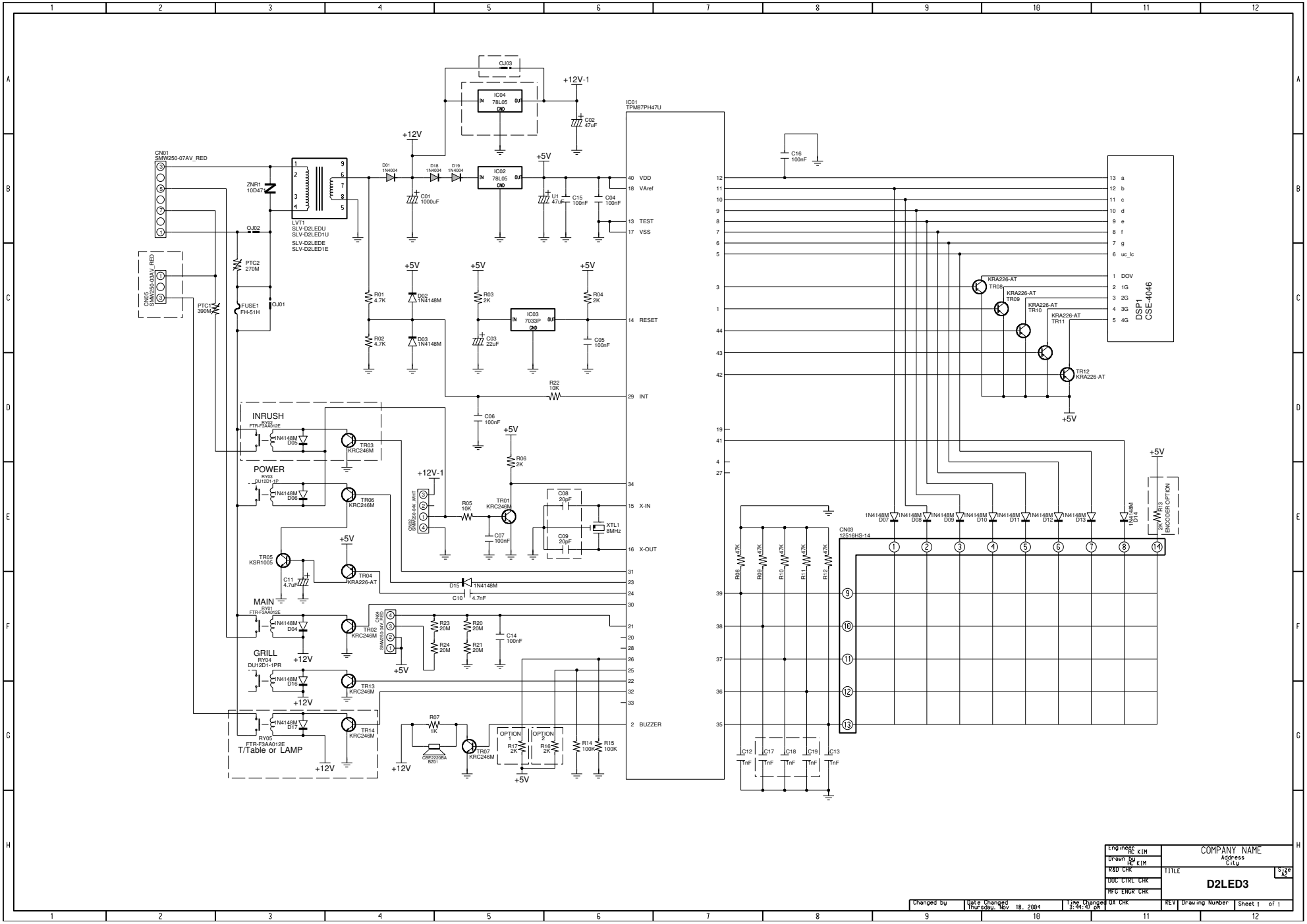

Engineer HC KIM	COMPANY NAME Address City	
Drawn by HC KIM		
R&D CHK	TITLE	Size A2
DOC CTRL CHK	D2LED3	
MFG ENGR CHK		
QA CHK	REV	Drawing Number
Changed by	Date Changed Thursday, Nov 18, 2004	Time Changed 3:44:47 pm
		Sheet 1 of 1