Project NO. : LBE040066

SAMSUNG ELECTRONICS

EMI TEST REPORT

According to FCC Part 15 Subpart B/Class B

Product : Laser Beam Printer
Model No. : Phaser 6100

FCC ID : A3LP6100

1. *This test reports shall not be reproduced except in full, without the written approval of SEC EMC Testing laboratory.*
2. *This test reports does not constitute an endorsement by NIST/NVLAP or U.S Government.*
3. *This test report is to certify that the tested device properly complies with the requirements of FCC Rules and Regulations Part 15 Subpart B Unintentional Radiators.*
   All tests necessary to show compliance to the requirements were and these results met the specifications requirement.
4. *That data in this report are traceable to National or International Standards.*

Date of test : Jan 26, 2004

Issued Date : Jan 26, 2004

Tested by:
Jong Ho,LEE / Test Engineer

Reviewed by:
Choon Kil,KIM / Manager of EMC Lab.

Authorised by:
Kyu Baek, CHUNG / Chief of EMC Lab.

This laboratory is registered by the NIST/NVLAP, U.S.A.
The test reported herein have been performed in accordance with its terms of registration.

NVLAP Code: 200447

Table of Contents

1. General Information
1.1 Product Description
1.2 Configuration of EUT and peripherals
1.3 Used Cable Description
1.4 System Block Diagram of Test Configuration
1.5 Test Facility

2. System Test Configuration
2.1 Configuration of Radiated and Conducted Interference Measurement
2.2 Operation Environment
2.3 Test Procedure
2.4 Measurement Uncertainty

3. Conducted Emission Test Data

4. Radiated Emission Test Data

5. Label Configuration and Location

6. Test Equipment Used

Distribution

This test report has been made available as follows:

CS Management Center, EMC Laboratory	1 original
Printer Division	1 copy

This report shall not be reproduced except in full, without the written approval of SEC EMC Testing laboratory.

1. General Information

Applicant	**:**	**Samsung Electronics Co., Ltd.**
Full Address	**:**	**416 Maetan 3 Dong, Paldal-Ku, Suwon City, Kyungki Do, Korea, 442-742**
Kind of Product	**:**	**Laser Beam Printer**
FCC ID	**:**	**A3LP6100**
Project Name	**:**	**-**
Model & Variant Names	**:**	**None**

Test Report Produced by : Jong Ho,LEE / Test Engineer

This report shall not be reproduced except in full, without the written approval of SEC EMC Testing laboratory.

1.1 Product Description

1) Justification

The system was configured for testing in typical fashion use. Cable were attached to each of the available I/O Ports. Where applicable, peripherals were attached to the I/O cables. The mode of operation utilized for testing was selected to best simulate typical EUT use.

In each test mode, Finally we found worst case emission that is above configuration with the Worst case components(in the above table). So, the DATA of the maximum EUT operation was reported.

Further details of cabling and configuration are shown in the test system configuration.

2) Operating Frequency :

Phaser 6100 is supporting the IEEE1284,USB,LAN Printing Mode.

Phaser 6100 model have

Video : 19.000614MHz,CPU:12.5MHz(Clock),LPEC clock:19.00064MHz
USB clock:30MHz,N/W clock:25MHz

This report shall not be reproduced except in full, without the written approval of SEC EMC Testing laboratory.

3) Description of Testing operating mode

Operating Mode	Operating section of EUT
USB Printing	Continously H pattern printing by Computer
IEEE1284 Printing	Continously H pattern printing by Computer
LAN Printing	Continously H pattern Receiving and Transmitting

EUT was tested all operating mode as above. Finally EUT was tested USB Printing mode as maximum emission.But all ports are activity and connected.

4) Tested Resolution :

Tested Video mode	Resolutions	Refresh rates	Colors

5) Manufacturer : SAMSUNG Electronics Co., Ltd.

This report shall not be reproduced except in full, without the written approval of SEC EMC Testing laboratory.

1.2 Configuration of EUT and peripherals

Mark	Item	Model No.	Serial No.	Manufacturer	Remark
A	Laser Beam Printer	Phaser 6100	-	Samsung	EUT
B	Computer	Blade1	729	DELL	DoC
C	Adaptor	PA150005D	CN00R3344801028600E0	DELL	-
D	Mouse	M-S69	LZP12500002	Logitech	JNZ211443
E	Mouse	Microsoft	1020764	Microsoft	C3KMS1

This report shall not be reproduced except in full, without the written approval of SEC EMC Testing laboratory.

1.3 Used Cable Description

No.	Item	Length[m]	Shielded (Y/N)	Remark
1	AC Power Cable	1.7	N	-
2	LAN	2.0	Y	-
3	USB Cable	1.5	Y	-
4	Parallel Cable	1.5	Y	-
5	AC Power Cable	1.5	N	-

This report shall not be reproduced except in full, without the written approval of SEC EMC Testing laboratory.

1.4 System Block Diagram of Test Configuration

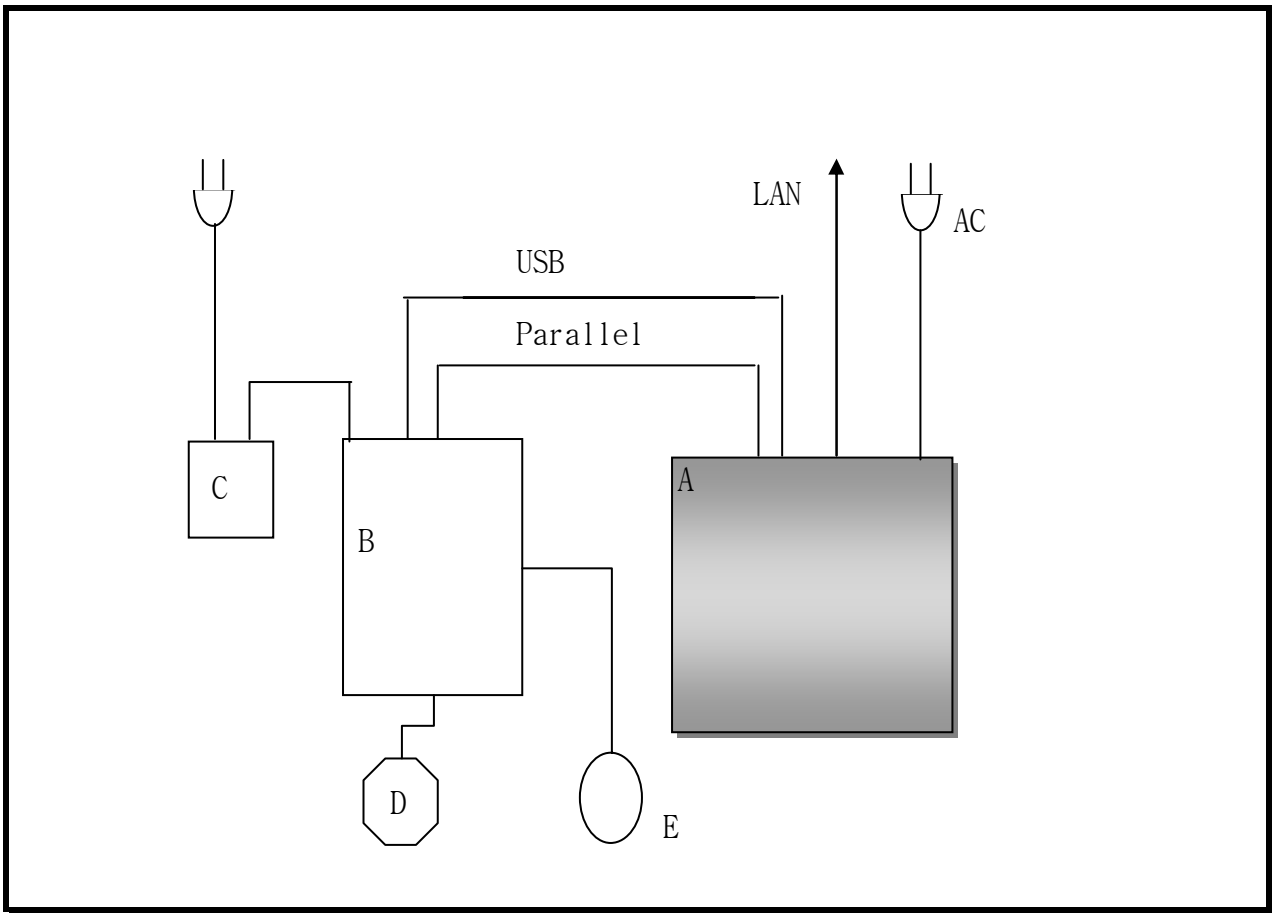

1.5 Test Facility

All test described in this report were performed by :

SAMSUNG ELECTRONICS CO., LTD.
EMC TESTING LABORATORY
416 Maetan 3 Dong, YoungTong-Gu, Suwon City, GyungKi Do, Korea, 442-742
Semi Anechoic Chamber #2(Registration Number:873282) and Shielded Room.

This test facility has been filed in FCC under the criteria in ANSI C63.4-1995.

This report shall not be reproduced except in full, without the written approval of SEC EMC Testing laboratory.

2. System Test Configuration

2.1 Configuration of Radiated and Conducted Interference Measurement

* Cabling was taken into consideration and test data was taken under worse case conditions.

1)Conduction(Front View)

2)Conduction(Rear View)

This report shall not be reproduced except in full, without the written approval of SEC EMC Testing laboratory.

3) Radiation(Front View)

3) Radiation(Rear View)

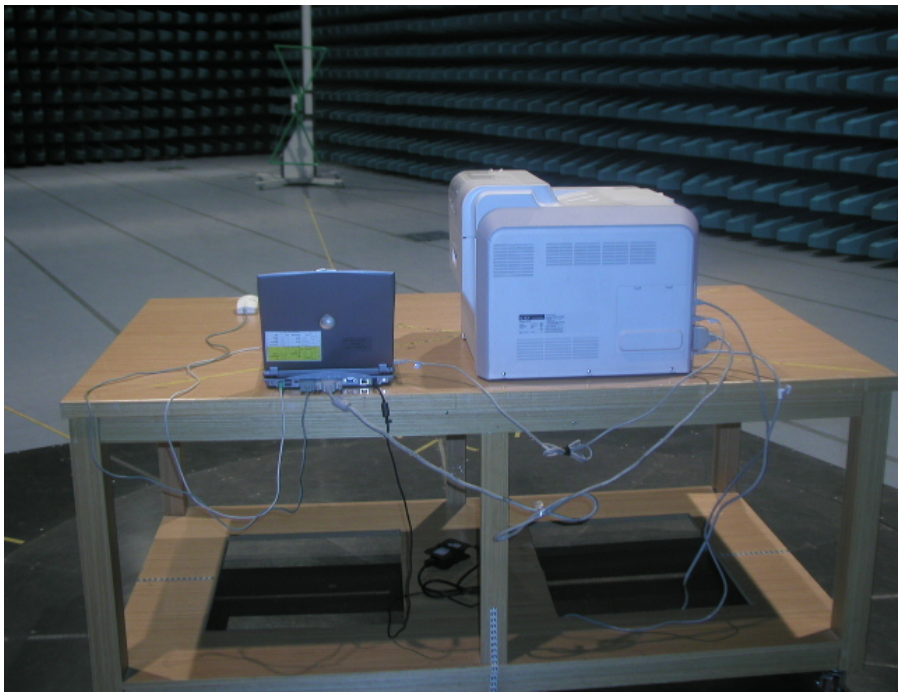

This report shall not be reproduced except in full, without the written approval of SEC EMC Testing laboratory.

2.2 Operation Environment

	Conduction	Radiation
Temperature [C] :	23	23
Humidity [%]	30	30
Power supply :	AC110V/60Hz	AC110V/60Hz

2.3 Test Procedure(ANSI C63.4)

2.3.1 Conducted Emissions

EUT was placed on a platform of nominal size, 1m by 1.5m, raised 80cm above the conducting ground plane. The rear of tabletop was located 40cm to the vertical conducting ground plane.
The rear of EUT,including peripherals was aligned and flush with rear of tabletop.
All other surfaces of tabletop was at least 80cm from any other grounded conducting surface. I/O cables and AC cables that were connected to the peripherals were bundled in center. They were folded back and forth forming a bundle 30cm to 40cm long and were hanged at a 40cm height to the ground plane.
Each EUT current-carrying power lead,except the ground(safety) lead, were individually connected through a LISN to the input power source.
All unused 50 ohm connectors of the LISN were resistively terminated in 50 ohm when not connected to the measuring equipment.

The EUT was switched on and allowed to warm up to its normal operating condition.
A quick scan, from 150kHz to 30MHz, was made on the L1 & L2 line by LISN.
High peaks, relative to the limit line, over the frequency range were then selected.
The EMI TEST RECEIVER was then tuned to the selected frequencies.
CISPR quasi-peak measurements with a receiver bandwidth setting of 10kHz, were taken.

This report shall not be reproduced except in full, without the written approval of SEC EMC Testing laboratory.

2.3.2 Radiated Emissions

EUT was placed on a platform of nominal size, 1m by 1.5m, raised 80cm above the conducting ground plane.
The rear of EUT,including peripherals was aligned and flush with rear of tabletop.
I/O cables that were connected to the peripherals were bundle in center.
They were folded back and forth forming a bundle 30cm to 40cm long and were hanged 40cm height to the ground plane.

The system configuration, clock speed, mode of operation or video resolution, turntable azimuth with respect to the antenna were noted for each frequency found.
The spectrum was scanned from 30 to 1000 MHz using biconiLog antenna.

Each emission was maximized by: varying the mode of operation or resolution; clock or data exchange speed; scrolling H pattern to the EUT and/or support equipment; powering the monitor from the floor mounted outlet box and the computer aux AC outlet if applicable, and changing the polarity of the antenna; whichever determined the worst-case emission.

This report shall not be reproduced except in full, without the written approval of SEC EMC Testing laboratory.

3. Conducted Emission Test Data

O Test Mode :

MEASUREMENT RESULT: "Phaser6100_fin QP"

Frequency MHz	Level dBµV	Transd dB	Limit dBµV	Margin dB	Line	PE
0.150000	56.70	0.6	66	9.3	N	GND
1.450000	32.30	0.6	56	23.7	L1	GND
1.550000	39.00	0.6	56	17.0	L1	GND
1.690000	27.90	0.6	56	28.1	L1	GND
1.790000	33.80	0.6	56	22.2	L1	GND
1.890000	39.20	0.6	56	16.8	L1	GND
2.080000	29.50	0.5	56	26.5	N	GND

MEASUREMENT RESULT: "Phaser6100_fin AV"

Frequency MHz	Level dBµV	Transd dB	Limit dBµV	Margin dB	Line	PE
0.150000	52.00	0.6	56	4.0	N	GND
1.260000	36.30	0.6	46	9.7	L1	GND
1.450000	26.00	0.6	46	20.0	L1	GND
1.600000	37.20	0.6	46	8.8	L1	GND
1.790000	27.40	0.6	46	18.6	L1	GND
1.940000	35.70	0.6	46	10.3	N	GND
1.990000	36.00	0.5	46	10.0	L1	GND

※Quasi-peak value is less 10dB than Average limits.

* Results = Meter Reading(QP) + Total Loss(LISN Insertion loss + Cable loss)
* Margin = Limits - Result

This report shall not be reproduced except in full, without the written approval of SEC EMC Testing laboratory.

3-1. Conducted Emission Test Graph

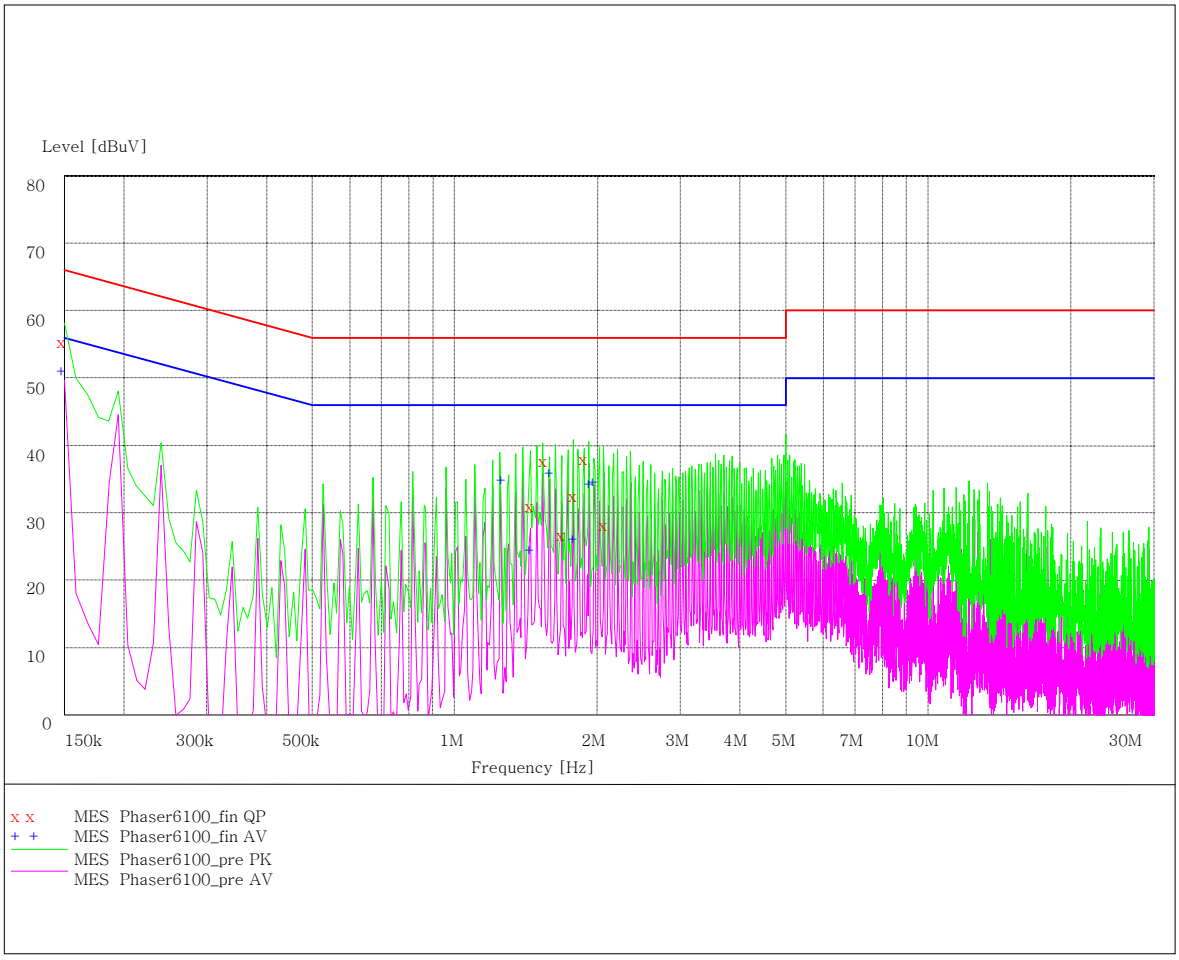

This report shall not be reproduced except in full, without the written approval of SEC EMC Testing laboratory.

4. Radiated Emission Test Data

MEASUREMENT RESULT: "Phaser6100_fin QP"

40.400000	24.20	13.5	30.0	5.8	279.0	180.00	VERTICAL
47.840000	20.90	9.8	30.0	9.1	100.0	337.00	VERTICAL
118.320000	21.60	13.3	30.0	8.4	311.0	39.00	HORIZONTAL
131.200000	20.20	13.3	30.0	9.8	179.0	45.00	VERTICAL
180.720000	19.80	10.7	30.0	10.2	139.0	338.00	VERTICAL
325.840000	22.60	16.7	37.0	14.4	301.0	54.00	HORIZONTAL
329.760000	18.30	16.7	37.0	18.7	236.0	47.00	HORIZONTAL
752.800000	27.00	24.7	37.0	10.0	209.0	215.00	VERTICAL
776.400000	23.90	24.8	37.0	13.1	315.0	137.00	VERTICAL
786.400000	25.00	24.8	37.0	12.0	192.0	17.00	VERTICAL
791.920000	23.90	24.7	37.0	13.1	204.0	38.00	VERTICAL
933.200000	29.90	25.7	37.0	7.1	204.0	41.00	VERTICAL

** "<" Means equal or less then 5dB*
** Receiving Antenna Mode :* ***Horizontal, Vertical***
** Results = Meter Reading + Total Loss(Antenna factor + Cable loss)*
* Measurement detector function and bandwidth
Detector function : CISPR quasi-peak(Above 1000MHz: Peak)
Resolution Bandwidth : 120kHz(Above 1000MHz: 1MHz)
** Test distance*
- Below 1000MHz: 3m(Quasi-peak)
- Above 1000MHz: 3m(Peak)

This report shall not be reproduced except in full, without the written approval of SEC EMC Testing laboratory.

4-2. Radiated Emission Test Graph

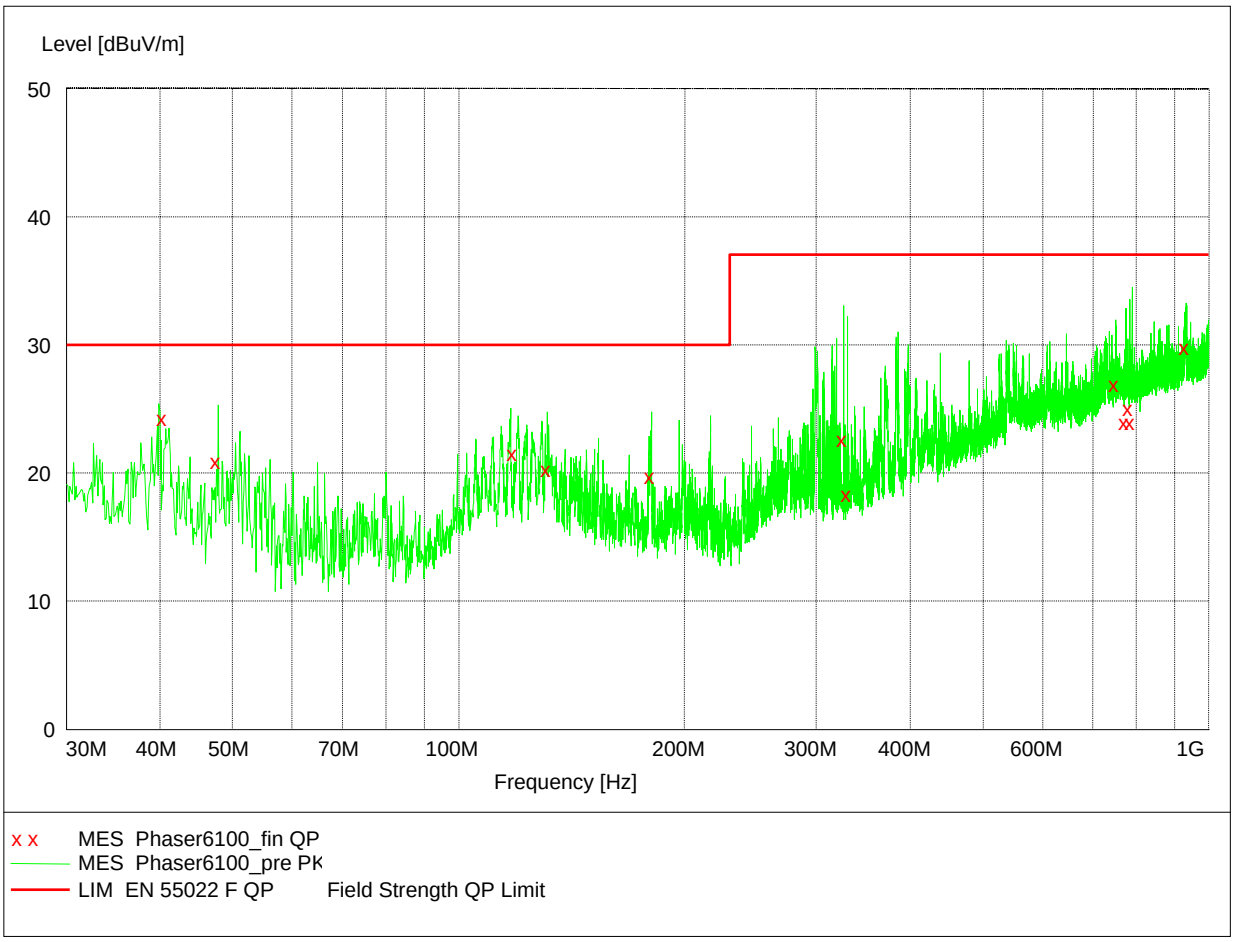

5. FCC Label Configuration and Location

5.1 Label Configulation

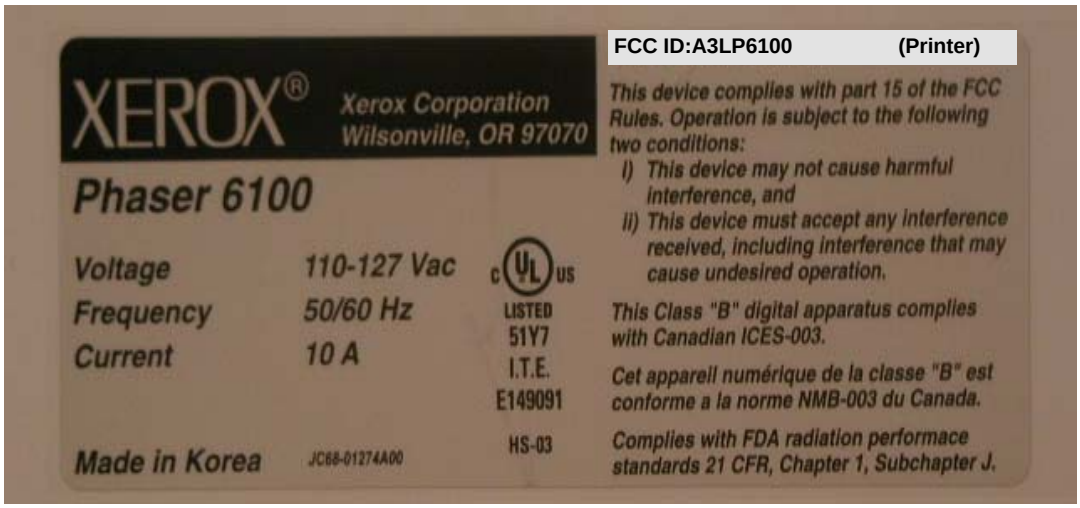

5.2 Location of Label

6. Test Equipment Used

Equipment	Model No.	Serial No.	Makers	Calibration Last calibration and Interval
Field strength meter	ESS	8448611/005	R & S	04/01/05, 12Months
	Firmware versions : Main 1.08, OTP 02.01, GRA 02.03			
Field strength meter	ESI	100010	R & S	03/ 05/04, 12Months
L.I.S.N	3810/2NM	EMCO	2251	03/02/07, 12Months
L.I.S.N	ESH3-Z5	831887/0004	R & S	03/ 08/18, 12Months
Bi-Log Antenna	CBL6112B	2805	Schaffner	03/04/02, 12Months

This report shall not be reproduced except in full, without the written approval of SEC EMC Testing laboratory.