7 Take a new imaging unit out of the package using the handle.

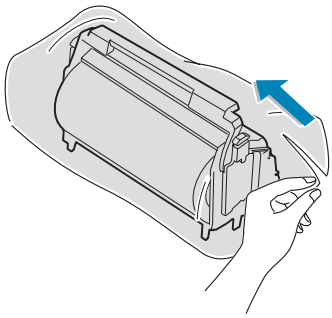

8 Remove the paper covering the imaging unit by removing the tape under the handle of the imaging unit.

**CAUTIONS**:

- Don't use sharp objects, such as a knife or scissors, to open the imaging unit package and tape on the protective paper liner. You could damage the surface of the imaging unit.
- To prevent damage, do not expose the imaging unit to light for more than a few minutes. Cover it with black paper, if necessary.
- Close the top and left cover A should the setup need to be halted for any reason.
- Do not touch the surface of the green roller on the imaging unit or print quality problems can occur.

9 Locate the imaging unit slots inside the printer, one on each side.

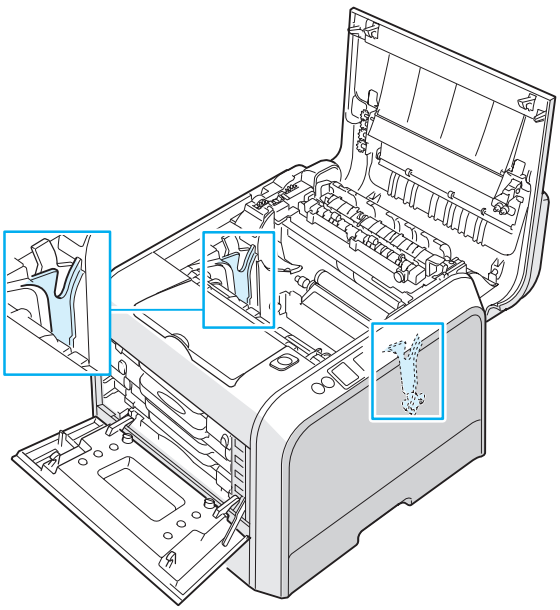

**10** Hold the handle of the new imaging unit with the green roller facing you. Align the imaging unit with the slots in your printer so that the colors on both sides of the imaging unit slide into the corresponding colors of the slots.

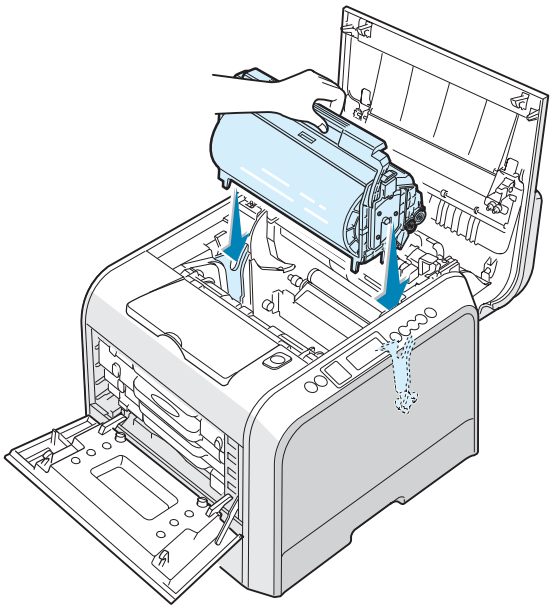

**CAUTION**: Insert the imaging unit carefully so as not to scratch and damage the surface of the green roller.

**11** Slide the imaging unit down into the printer until it cannot be pushed in any further and fold the handle down.

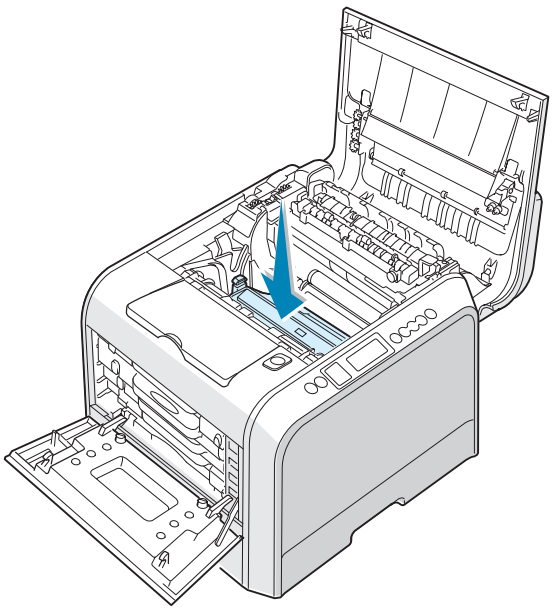

**12** To replace the transfer belt, hold its handle and then align it with the slots inside your printer, on each side.

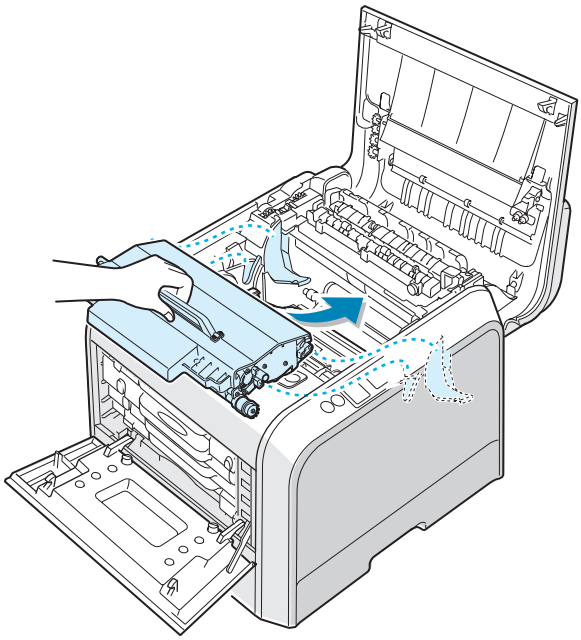

**CAUTION**: Do not turn the transfer belt over. If you do this, the toner may spill.

**13** Slide the transfer belt down into the printer and press it firmly into place.

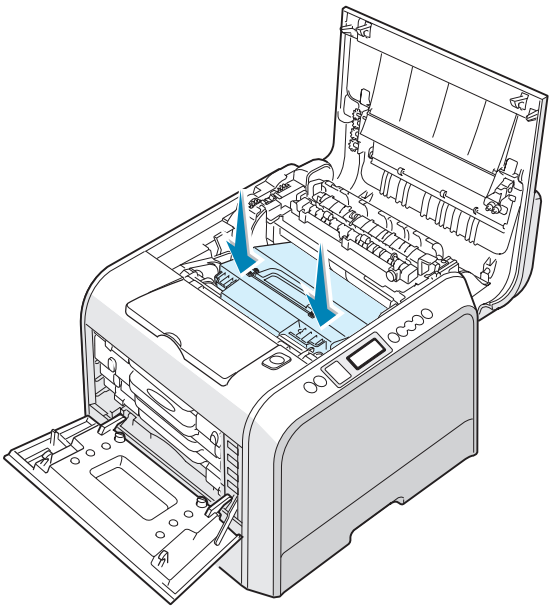

**14** Firmly push the lock levers on each side towards the top cover B, as shown below, to lock the transfer belt into place.

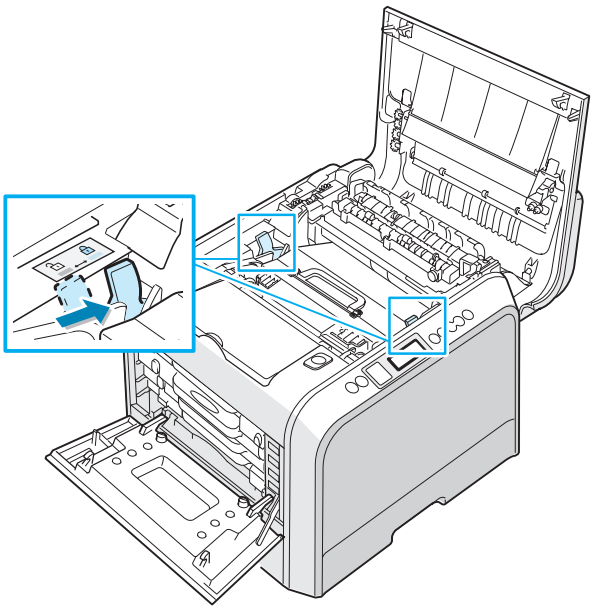

**15** After making sure that the left cover A is open, close the top cover B. Make sure that it is securely latched.

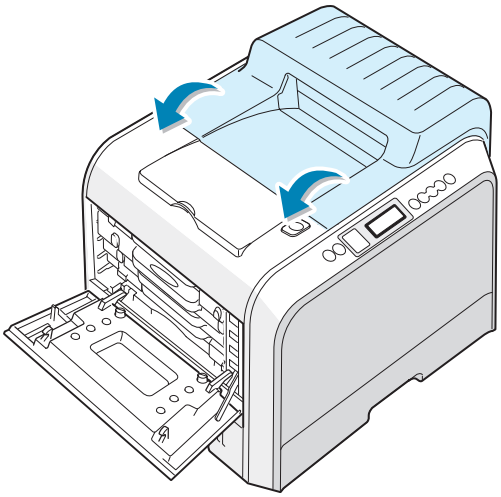

**CAUTION**: Do not try to close the left cover A with the top cover B open. This may cause damage to the printer.

**16** Close the left cover A firmly.

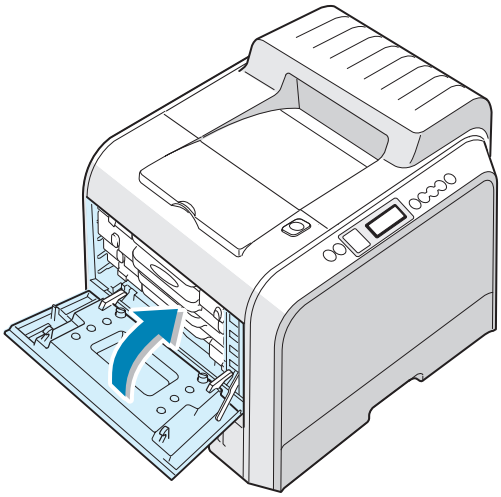

**17** Turn the printer on.

# Replacing the Transfer Belt

The life of the transfer belt is approximately 50,000 images. Replace the transfer belt when the control panel displays 'Replace Transfer Belt'.

To replace the transfer belt:

1. Turn the printer off, then wait a few minutes for the printer to cool.

2. Using the handle, completely open the left cover A until it is at right angles to the main frame and the toner cartridges are ejected.

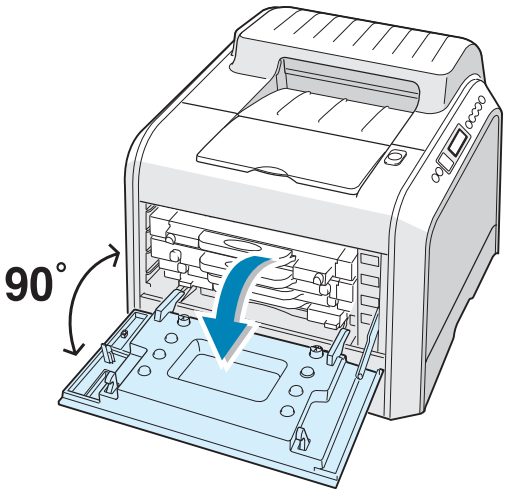


**CAUTION**: If the left cover A is not completely open, the top cover release button does not press.

3 Press the top cover release button to unlatch the top cover B and open it all the way.

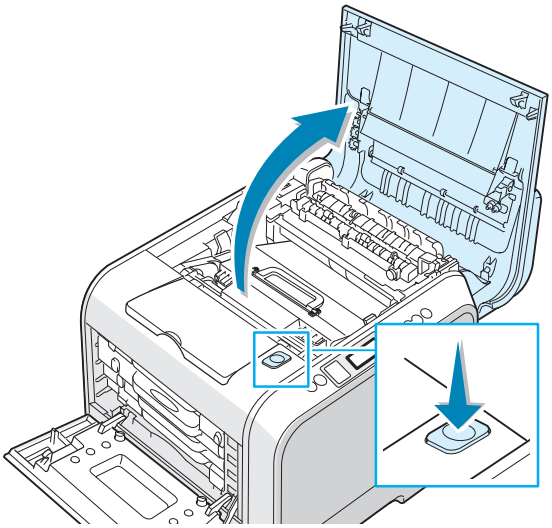

4 Pull the lock levers on each side towards you, as shown below, to release the transfer belt.

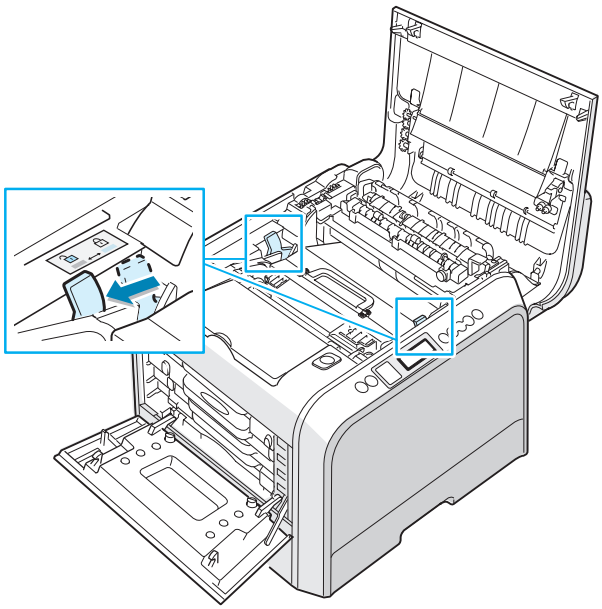

5 Using the handle, lift the used transfer belt out of the printer by lightly pulling it towards the left of the printer.

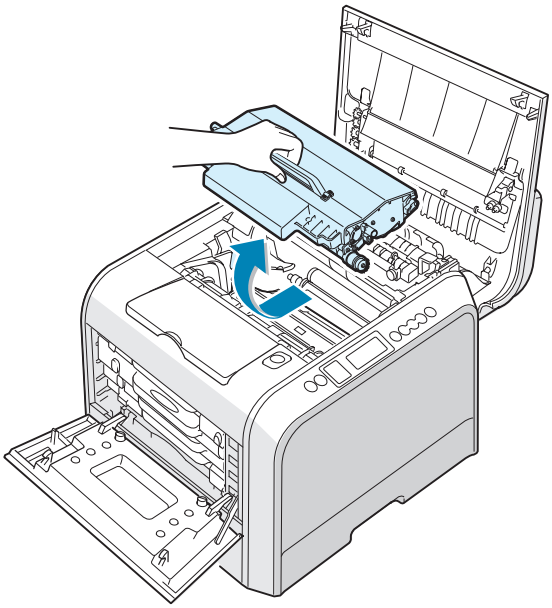

**CAUTION**: Keep the transfer belt level, do not turn the transfer belt over otherwise loose toner may be spilled.

6 Take a new transfer belt out of the package.

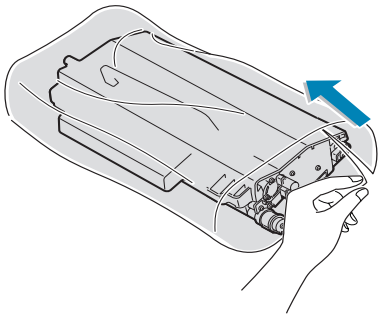

7 Remove the paper covering the transfer belt by removing the tape under the handle of the transfer belt.

**CAUTION**: Don't use sharp objects, such as a knife or scissors, to open the transfer belt package. You could damage the surface of the transfer belt.

8 Pinch the transfer belt tension levers on both sides of the transfer belt. Then, pull them out, as shown below.

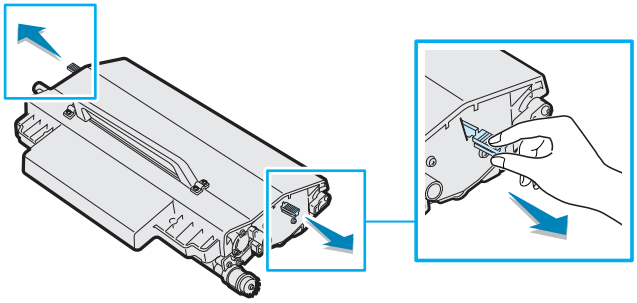

9 Locate the transfer belt slots inside the printer, one on each side.

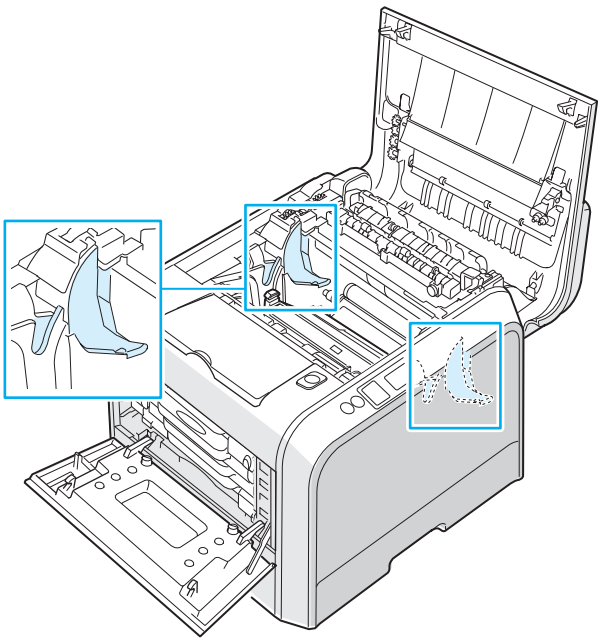

**CAUTION**: To prevent damage, do not expose the imaging unit to light for more than a few minutes. Close the top and left cover A should the setup need to be halted for any reason.

**10** Hold the handle on the new transfer belt and then align it with the slots inside your printer, on each side.

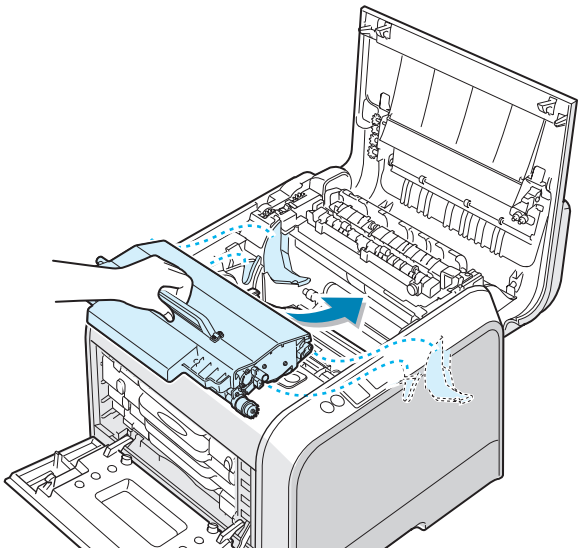

**CAUTION**: Keep the transfer belt level, do not turn the transfer belt over otherwise loose toner may be spilled.

**11** Slide the new transfer belt down into the printer and press it firmly into place.

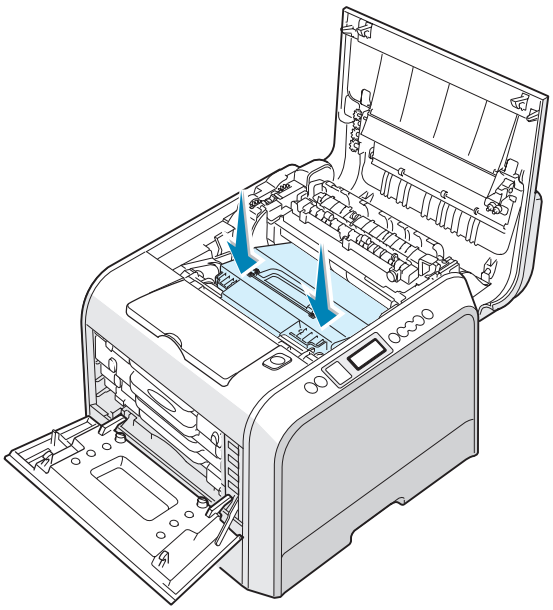

**12** Firmly push the lock levers on each side towards the top cover B, as shown below, to lock the transfer belt into place.

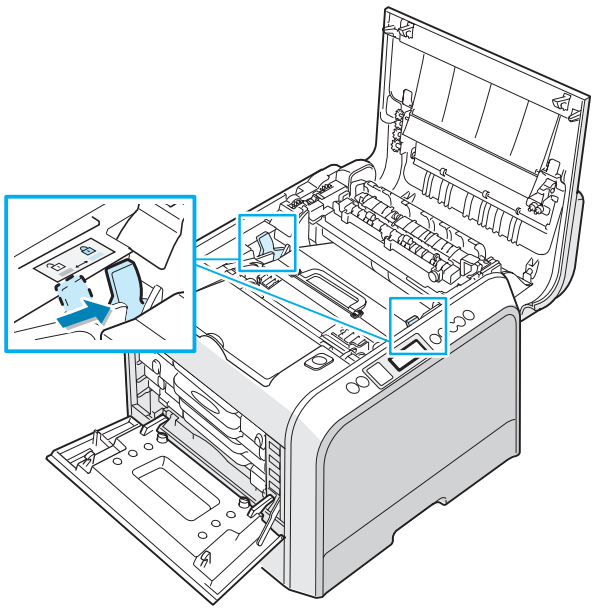

**13** After making sure that the left cover A is open, close the top cover B. Make sure that it is securely latched.

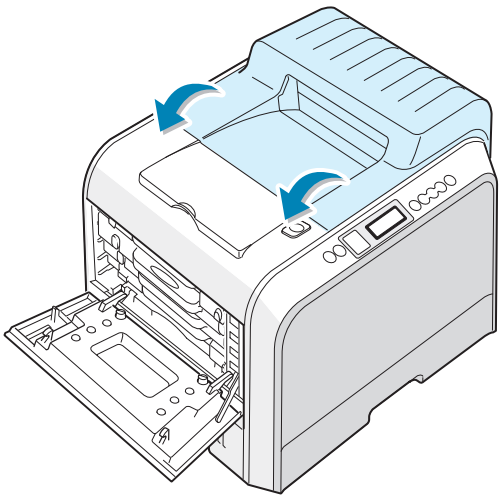

**CAUTION**: Do not try to close the left cover A with the top cover B open. This may cause damage to the printer.

**14** Close the left cover A firmly.

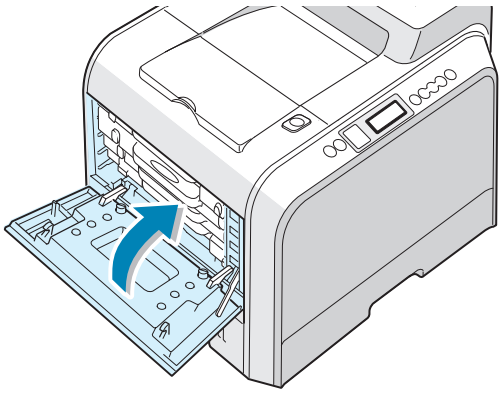

**15** Turn the printer on.

# Cleaning the Printer

Your printer needs little maintenance, other than periodic cleaning, to keep it producing quality prints. See the following options for methods to use when cleaning your printer:

- Printing a Cleaning Page
- Cleaning the Outside of the Printer
- Cleaning the Laser Scanning Unit (LSU) Inside the Printer
- Cleaning the Inside of the Printer

## Printing a Cleaning Page

You can print a fuser cleaning sheet. It cleans the fuser unit inside the printer.

This process produces a page with toner debris, which you should throw away.

1. Ensure that the printer is turned on and in ready mode with paper loaded in the tray.
2. In ready mode press the **Menu** button ( ) on the control panel until you see 'Maintenance' on the bottom line of the display.
3. Press the **OK** button ( OK ) to access the menu.
4. Press the scroll button ( ◀ or ▶ ) until 'Cleaning Page' displays.
5. Press the **OK** button ( OK ).

'Cleaning Now' appears on the display and your printer automatically prints out the cleaning sheet with dust or toner particles on it.

## Cleaning the Outside of the Printer

Clean the cabinet of the printer with a soft, lint-free cloth. You can dampen the cloth slightly with water, but be careful not to be let any water drip onto the printer or inside of it.

**CAUTION**: Cleaning the cabinet of the printer with cleaners containing large amounts of alcohol, solvent or other strong substances can discolor or crack the cabinet.

## Cleaning the Laser Scanning Unit (LSU) Inside the Printer

**NOTE**: Clean the LSU when you remove the particles of paper, toner and dust inside the printer.

Open and close the left cover A to clean the LSU inside of the printer automatically.

1 Using the handle, completely open the left cover A until it is at right angles to the main frame and the toner cartridges are ejected.

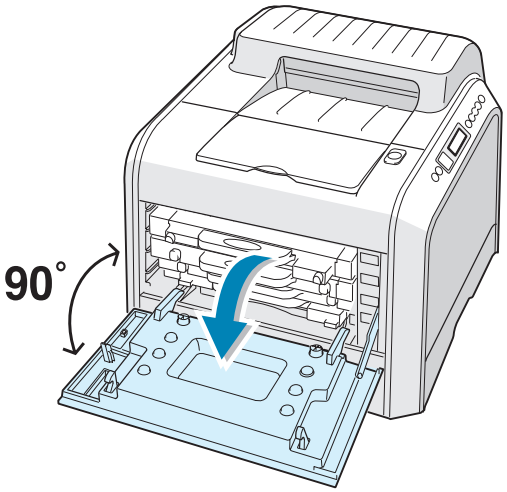


2 Close the left cover A firmly.

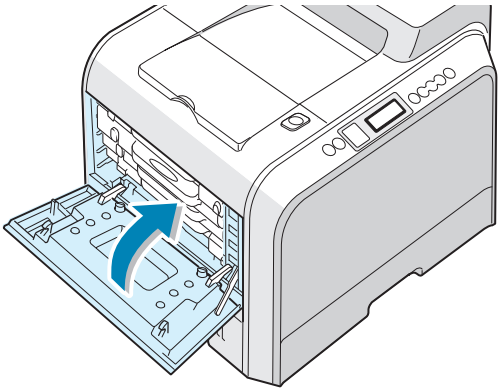

**NOTE**: Repeat this procedure as many times as necessary to clean the Laser Scanning Unit (LSU).

## Cleaning the Inside of the Printer

**NOTE**: While cleaning the inside of the printer, be careful not to touch the transfer roller located underneath the toner cartridge. Oil from your fingers can cause print quality problems.

1. Turn the printer off and unplug the power cord, then wait a few minutes for the printer to cool.

2. Using the handle, completely open the left cover A until it is at right angles to the main frame and the toner cartridges are ejected.

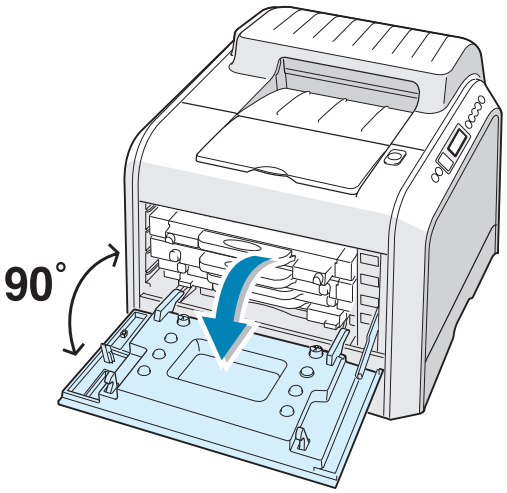


**CAUTION**: If the left cover A is not completely open, the top cover release button does not press.

3 Pull the handle lightly first, and then holding the toner cartridges, remove them from the printer. Set them on a clean flat surface.

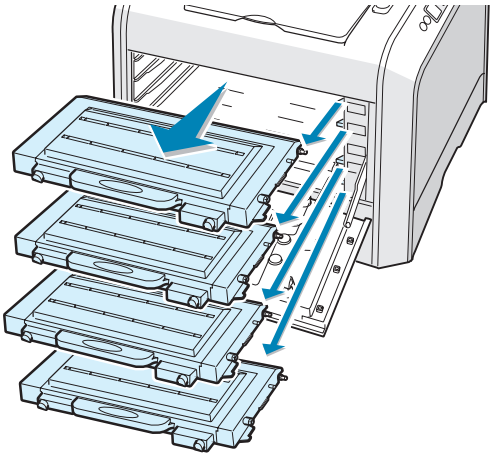

4 Press the top cover release button to unlatch the top cover B and open it all the way.

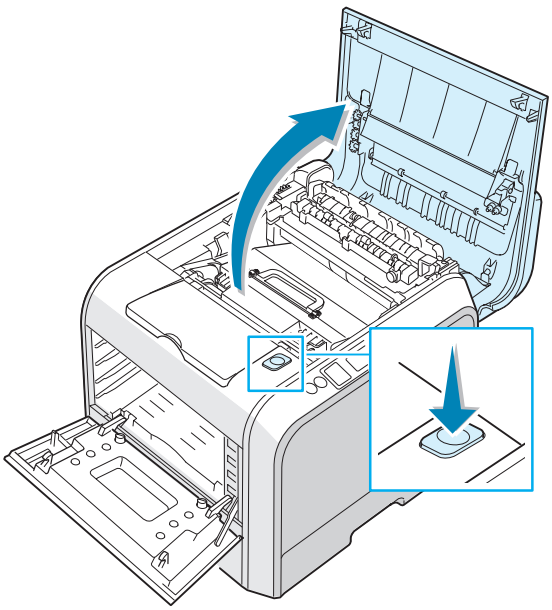

**CAUTION**: If you open the left cover A for a few minutes, the imaging unit can be exposed to light. This causes damage to the imaging unit. Close the top and left cover A should the setup need to be halted for any reason.

5 Pull the lock levers on each side towards you, as shown below, to release the transfer belt.

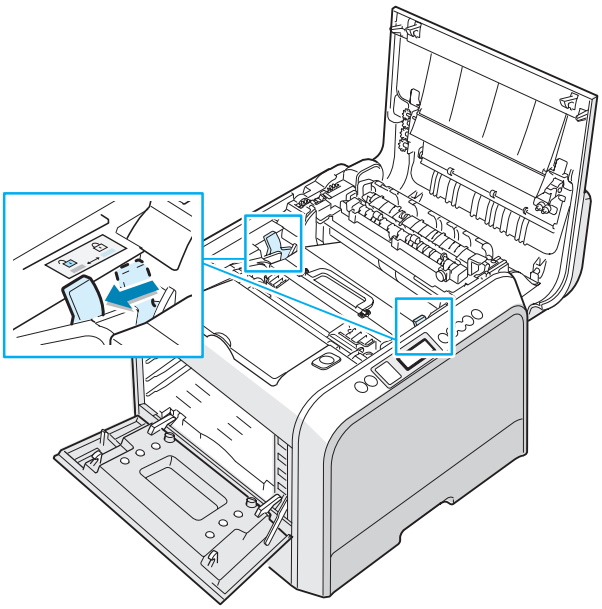

6 Using the handle, lift the transfer belt out of the printer by lightly pulling it towards the left of the printer. Set it on a clean flat surface.

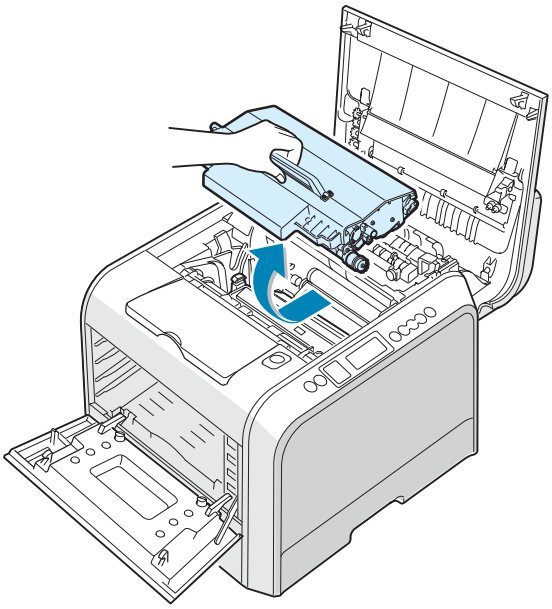

7 Lift the handle of the imaging unit and use it to pull the imaging unit out of the printer. Set it on a clean flat surface.

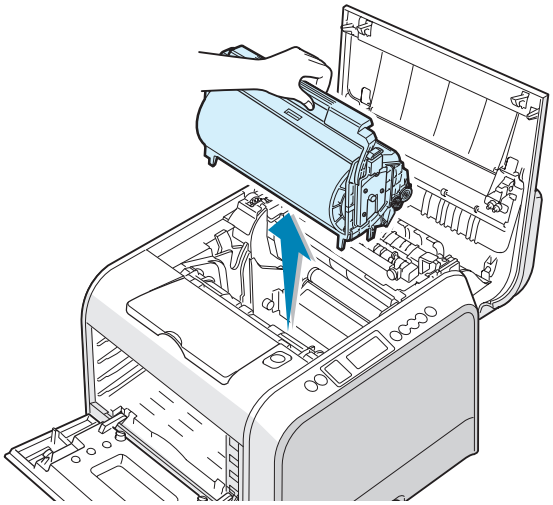

**CAUTIONS**:

- To prevent damage, **do not expose the imaging unit to light for more than a few minutes**. Cover it with black paper, if necessary.
- Close the top and left cover A should the setup need to be halted for any reason.
- Do not touch the surface of the green roller on the imaging unit or print quality problems can occur.

8 Look inside the printer. Remove any dust, paper particles, and spilled toner with a damp, soft lint-free cloth.

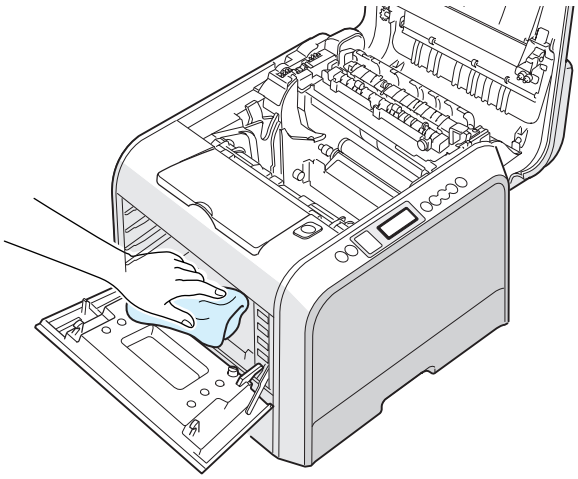

9 Insert the imaging unit back into the printer. Make sure you hear it click, and then fold the handle down. For details, see steps 9 to 10 on page 6.17.

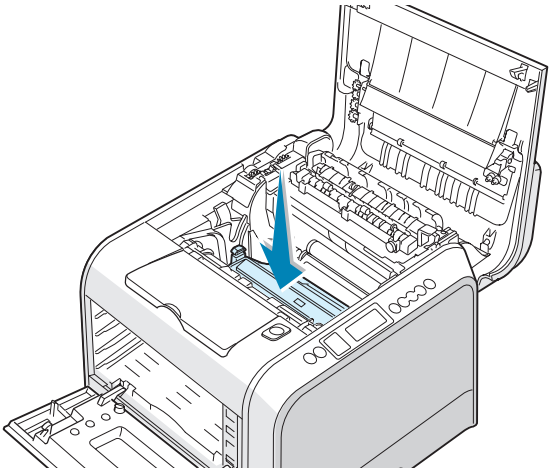

**CAUTION**: Replace the imaging unit carefully so as not to scratch and damage the surface of the green roller on the imaging unit.

10 Insert the transfer belt back into the printer. Press it firmly to make sure it fits into place. For details, see steps 9 and 10 on page 6.25.

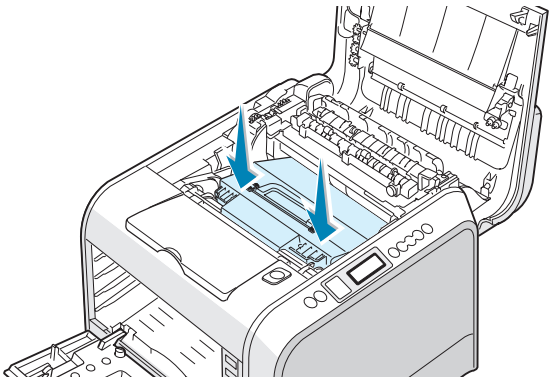

**CAUTION**: Keep the transfer belt level, do not turn the transfer belt over otherwise loose toner may be spilled.

**11** Firmly push the lock levers on each side towards the top cover B, as shown below, to lock the transfer belt into place.

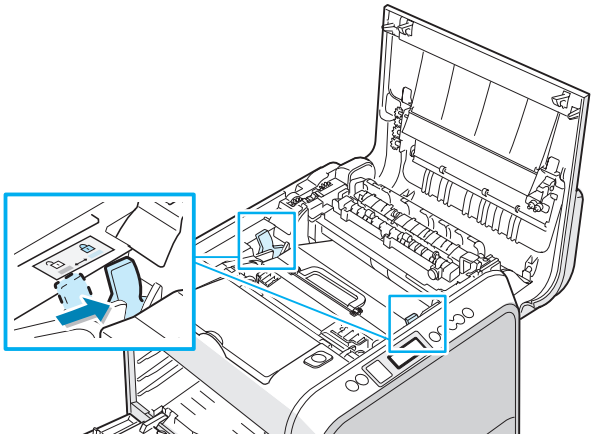

**12** After making sure that the left cover A is open, close the top cover B. Make sure that it is securely latched.

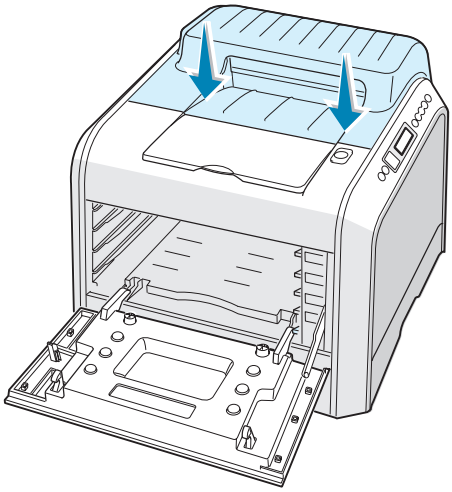

**CAUTION**: Do not try to close the left cover A with the top cover B open. This may cause damage to the printer.

**13** Look inside the printer on the right and then locate the color of the toner cartridges that matches the color of the slot.

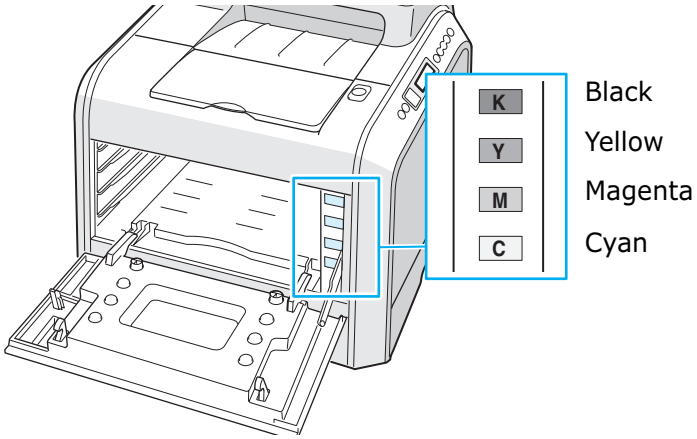


**14** Holding each toner cartridge, insert them into their corresponding positions in order of Cyan, Magenta, Yellow and then Black. Using both hands, grip the cartridge to insert into the slot. Then hold the handle to slide the cartridge in.

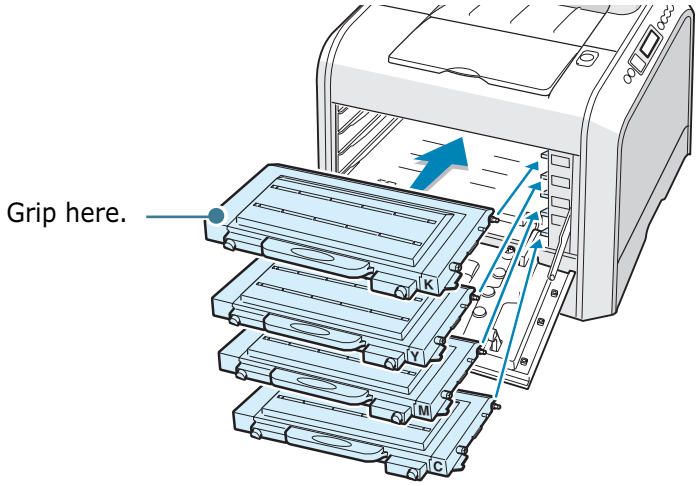


Although you correctly installed the toner cartridges, the black and yellow toner cartridges are not inserted completely. When you close the left cover, they insert into place.

**15** Close the left cover A. Make sure that it is securely latched.

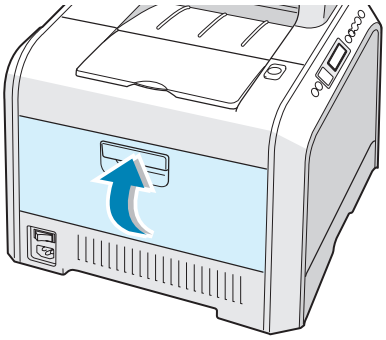

If you installed the toner cartridges incorrectly, the left cover A will not close properly. Check again to make sure the colors correspond. Never use force to close the cover.

**16** Plug the power cord in and turn the printer on.

## Replacement Parts

From time to time, you will need to replace the transfer roller and fuser unit to maintain top performance and avoid print quality problems and paper feed problems resulting from worn parts.

To purchase replacement parts, contact your Xerox reseller or see Appendix G for the Xerox web site.

# 7 SOLVING PROBLEMS

This chapter provides helpful information for what to do if you encounter an error while using your printer.

This chapter includes:

- **Troubleshooting Checklist**
- **Solving General Printing Problems**
- **Clearing Paper Jams**
- **Solving Print Quality Problems**
- **Understanding Display Messages**
- **Common Windows Problems**
- **Common Macintosh Problems**
- **Common Linux Problems**

# Troubleshooting Checklist

If the printer is not working properly, use the information on this page to troubleshoot the problem.

| Check | Solution |
|---|---|
| Make sure that the **On Line/Continue** button on the control panel is green and "Ready" is shown on the display. | • If the button backlight is off, check the power cord connection. Check the power switch. Check the power source by plugging it into another outlet.<br>• If the button backlight is orange, check the display message and go to "Understanding Display Messages" on page 7.25. |
| Print a demo page to verify that the printer is feeding paper correctly. | • If a demo page does not print, check the paper supply in the paper tray.<br>• If the paper jams in the printer, go to "Clearing Paper Jams" on page 7.6.<br>• If an error message appears on the display, go to "Understanding Display Messages" on page 7.25. |
| Check the demo page to see if it is printed correctly. | If there is a print quality problem, go to "Solving Print Quality Problems" on page 7.21. |
| Print a short document from a software application to verify that the computer and printer are connected and are communicating correctly. | • If the page does not print, check the cable connection between the printer and the computer.<br>• Check the print queue or print spooler to see if the printer has been paused.<br>• Check the software application to ensure that you are using the proper printer driver and communication port. If the page is interrupted during printing, go to "Solving General Printing Problems" on page 7.3. |
| If completing the checklist does not resolve the printer problem, check the following troubleshooting sections. | • See "Solving General Printing Problems" on page 7.3.<br>• See "Understanding Display Messages" on page 7.25.<br>• See "Common Windows Problems" on page 7.29.<br>• See "Common Macintosh Problems" on page 7.30<br>• See "Common Linux Problems" on page 7.31. |

# Solving General Printing Problems

For problems with the operation of your printer, refer to the table for suggested solutions.

You can also find solutions in the infoSMART knowledge base on the Xerox web site. See Appendix G for the web site address.

| Problem | Possible Cause | Solution |
|---|---|---|
| The printer does not print. | The printer is not receiving power. | Check the power cord connections. Check the power switch and the power source. |
| | The printer is not selected as the default printer. | Select **Xerox Phaser 6100** as your default printer. |
| | Check the printer for the following:<br>• The printer cover is not closed.<br>• Paper is jammed.<br>• No paper is loaded.<br>• The toner cartridge is not installed. | • Close the printer cover.<br>• Remove the jammed paper.<br>• Load paper into the tray.<br>• Install the toner cartridges. |
| | The printer may be in manual feed mode and out of paper. | Check the display message, add paper to the Multi-purpose Tray and press the **On Line/Continue** button on the printer's control panel. |
| | The connection cable between the computer and the printer is not connected properly. | Disconnect the printer cable and reconnect it. |
| | The connection cable between the computer and the printer is defective. | If possible, attach the cable to another computer that is working properly and print a document. You can also try using a different printer cable. |
| | The port setting is incorrect. | Check the Windows printer setting to make sure that the print job is sent to the correct port, for example, LPT1. If the computer has more than one port, make sure that the printer is attached to the correct one. |
| | The printer may be configured incorrectly. | Check the printer properties to ensure that all of the print settings are correct. |
| | The printer driver may be incorrectly installed. | Reinstall the printer driver. Try printing a demo page. |

| Problem | Possible Cause | Solution |
|---|---|---|
| The printer does not print. *(Continued)* | The printer is malfunctioning. | Check the display message on the control panel to determine if the printer is indicating a system error. |
| Printer selects paper from the wrong tray selection. | The tray selection in the printer properties may be incorrect. | For many software applications, the tray selection is found under the **Paper** tab within the printer properties. Select the correct paper tray. See page 3.7. |
| Paper does not feed into the Printer. | Paper has been loaded incorrectly. | Remove paper from the tray and reload it correctly.<br><br>Check that the paper size adjusters are set correctly. |
| | There is too much paper in the paper tray. | Remove excess paper from the tray. |
| | The paper is too thick. | Use only paper that meets the specifications required by the printer. |
| Print job is printing very slowly. | The print job is very complex. | Adjust the printer settings or lessen the complexity of the document.<br><br>Your printer prints A4-size paper at 20 ppm for black, Letter-size paper at 21 ppm or A4/Letter-sized at 5 ppm for color. |
| | If using Windows 98/ Me, the Spooling Setting may be set incorrectly. | From the **Start** menu, choose **Settings** and **Printers**. Right-click the **Xerox Phaser 6100** printer icon, choose **Properties**, click the **Details** tab, and then choose the **Spool Settings** button. Select the desired spool setting. |
| Half the page is blank. | The page orientation setting may be incorrect. | Change the page orientation in your application. See page 3.6. |
| | The paper size and the paper size settings do not match. | Ensure that the paper size in the printer driver settings matches the paper in the tray. |

| Problem | Possible Cause | Solution |
|---|---|---|
| The paper keeps jamming. | There is too much paper in the paper tray. | Remove excess paper from the tray.<br><br>If printing on specialty media, use the Multi-purpose Tray.<br><br>Check that the paper size adjusters are set correctly. |
| | An incorrect type of paper is being used. | Use only paper that meets the specifications required by the printer.<br><br>If printing on specialty media, use the Multi-purpose Tray. |
| | There may be debris inside the printer. | Open the top cover B and remove the debris. |
| The text is scrambled, or incomplete. | The printer cable is not plugged in or is defective. | Unplug the printer cable, reconnect it, then print a job you know will print successfully.<br><br>Attach the cable and printer to another computer, then print a job you know will print successfully.<br><br>Try using a new printer cable. |
| | An incorrect printer driver is selected. | Check the application's printer selection menu to ensure that your printer is selected. |
| | The software application is malfunctioning. | Try printing a job from another application. |
| Pages print, but are blank. | The toner cartridge is defective or out of toner. | Redistribute the toner. If necessary, see page 6.5.<br><br>If necessary, replace the toner cartridge. |
| | The file may have blank pages. | Check the file to ensure that it does not contain blank pages. |
| | Some parts, such as the controller or the board, may be defective. | Contact a service representative. |

# Clearing Paper Jams

**NOTE**: When removing paper that is jammed in the printer if possible always pull the paper in the direction that it normally moves so as not to damage internal components. Always pull firmly and evenly, do not jerk the paper. If the paper tears ensure that all fragments of paper are removed, otherwise a jam will occur again.

The display on the control panel tells you where a paper jam occurs. Refer to the table below to locate the paper jam and to clear it:

| Message | Location of Jam | Go to... |
|---|---|---|
| Jam at Tray 1 | At Tray 1 or paper feed area | page 7.7 |
| Jam at MPT | At the Multi-purpose Tray (MPT) | page 7.9 |
| Jam at C | Jam inside the printer or in the duplex area. | page 7.9 and page 7.10 |
| Jam at B,C | Jam in the paper exit area. | page 7.14 |
| Jam at Tray 2 | At Optional Tray 2 | page 7.17 |

To resume printing after clearing paper jams, you must open and close the right cover C.

## Jam at Tray 1 or the Paper Feed Area

If paper is jammed in the paper feed area, 'Jam at Tray 1' appears on the display.

1 Using the handle, open the right cover C.

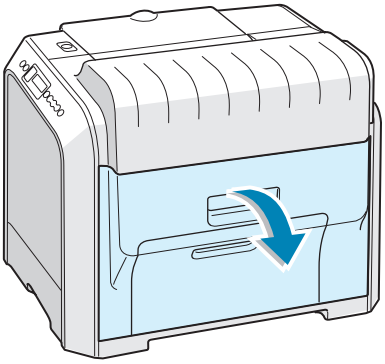

2 Carefully remove the misfed paper in the direction as shown. Go to step 6.

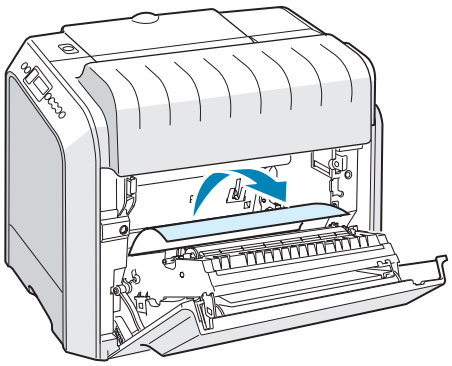

If there is any resistance, and the paper does not move immediately when you pull, stop pulling and go to step 3.

3 Pull the tray open. After you pull it all the way out, lift up the front part of the tray slightly to release the tray from the printer.

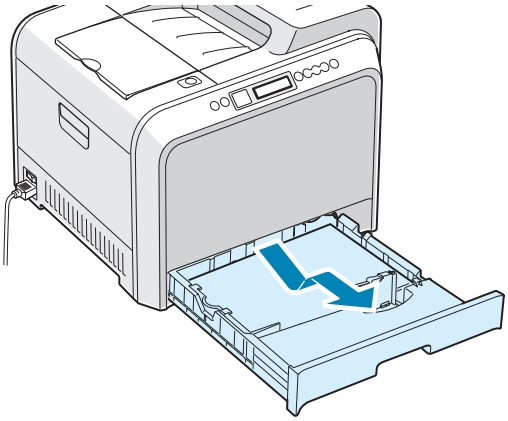

4 Remove the jammed paper by gently pulling it straight out.

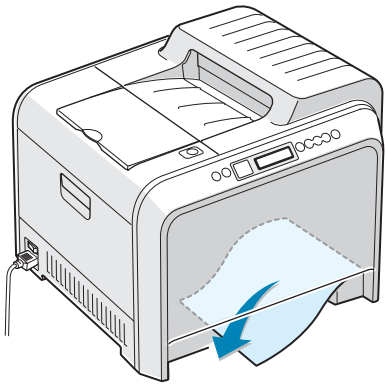

5 To replace the tray, lower the rear edge, align it to the slot and slide it into the printer.

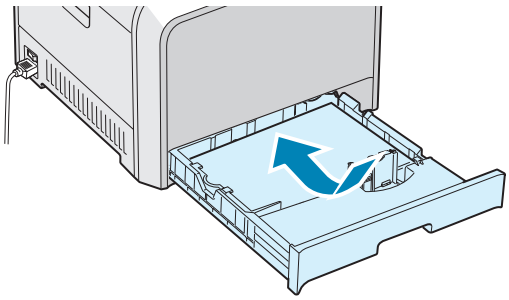

6 Close the right cover C. The printer resumes printing.

## Jam at the Multi-purpose Tray (MPT)

'Jam at MPT' appears on the display when you print using the Multi-purpose Tray and the printer detects either there is no paper or the paper is improperly loaded.

If the paper is not feeding properly, pull the paper out of the printer.

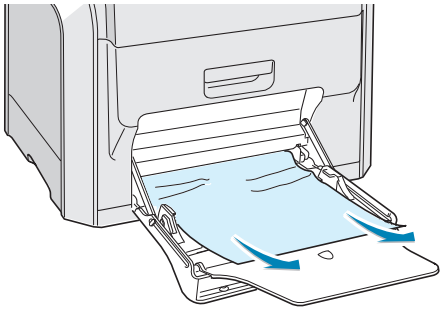

To resume printing, open and close the right cover C.

## Jam at C (Inside the Printer)

If paper is jammed inside the printer, 'Jam at C' appears on the display.

1 Using the handle, open the right cover C.

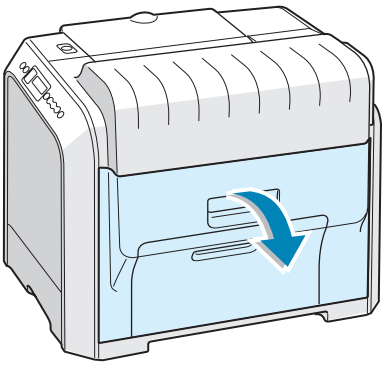

2 Remove the jammed paper, in the direction shown. To avoid the paper tearing, pull it out gently and slowly.

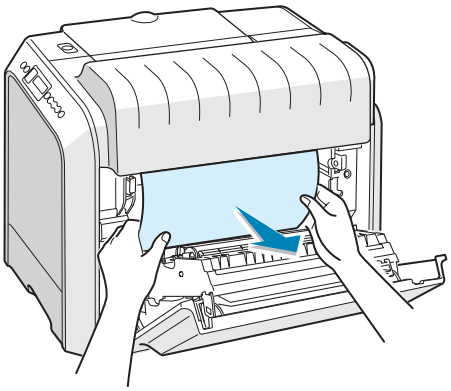

**NOTE**: If the paper tears, make sure that all of the paper fragments are removed from the printer.

3 Close the right cover C. The printer resumes printing.

## Jam at C (In Duplex Area)

If paper is jammed in the duplex area, 'Jam at C' appears on the display.

1 Using the handle, open the right cover C.

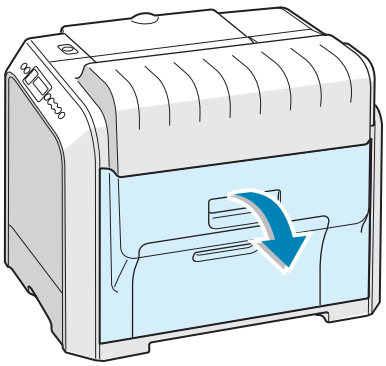

2 Locate the jammed paper, and then pull it out gently and slowly to avoid the paper tearing. Go to step 8.

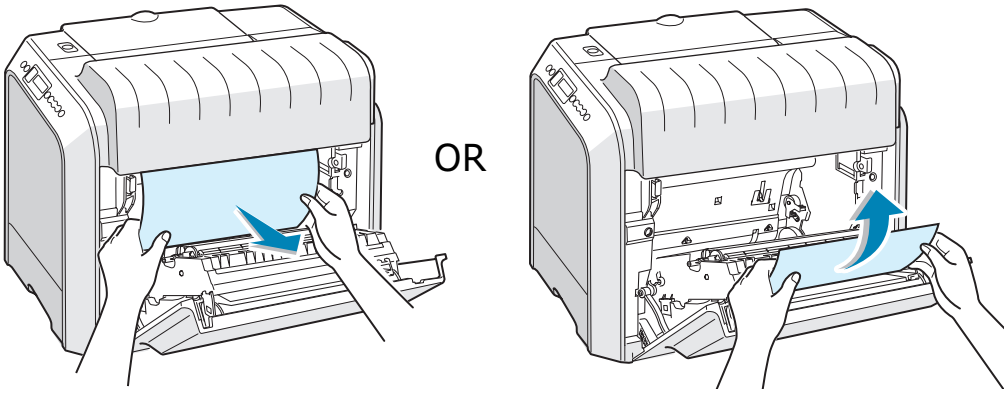


**NOTE**: If the paper tears, make sure that all of the paper fragments are removed from the printer.

If you cannot find the jammed paper or there is any resistance removing the paper, go to step 3.

3 Using the handle, completely open the left cover A until it is at right angles to the main frame and the toner cartridges are ejected.

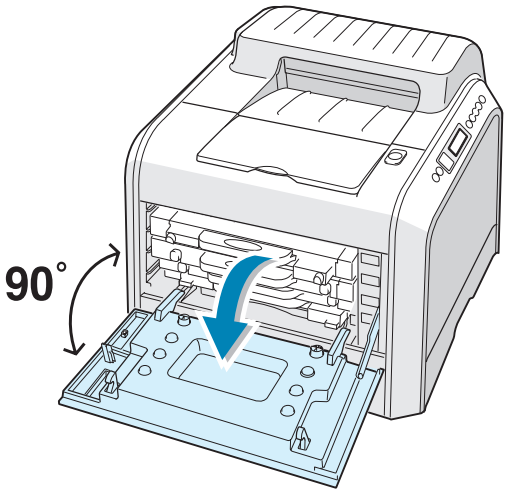


**CAUTION**: If the left cover A is not completely open, the top cover release button does not press.

4 Press the top cover release button to unlatch the top cover B and open it all the way.

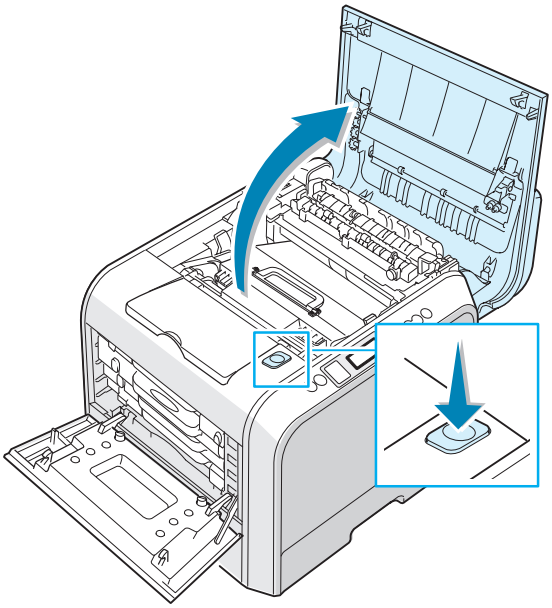

5 Locate the jammed paper, and then carefully take it out of the printer.

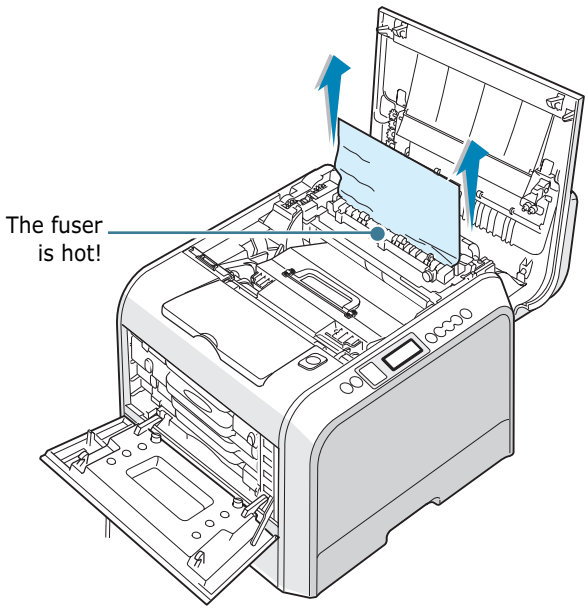


**CAUTION**: Do not touch the fuser. It is hot and could cause burns! The fuser's operating temperature is 180°C (356°F). Take care when removing paper from the printer.

6 After making sure that the left cover A is open, close the top cover B. Make sure that it is securely latched.

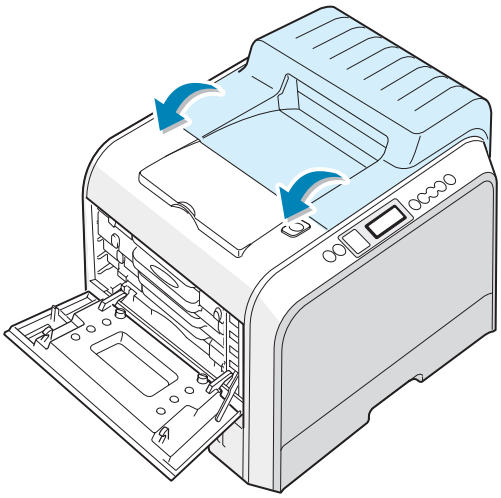

**CAUTION**: Do not try to close the left cover A with the top cover B open. This may cause damage to the printer.

7 Close the left cover A firmly.

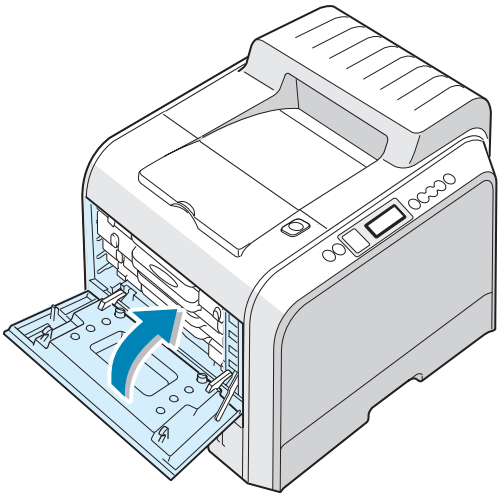

8 Close the right cover C. The printer resumes printing.

## Jam at B, C

If paper is jammed in the paper exit area, 'Jam at B,C' appears on the display.

1 If a long portion of the paper is visible, pull it straight out. Go to step 7.

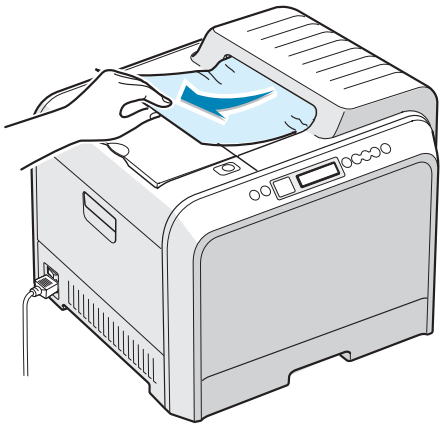

If you cannot find the jammed paper or there is any resistance removing the paper, go to step 2.

2 Using the handle, completely open the left cover A until it is at right angles to the main frame and the toner cartridges are ejected.

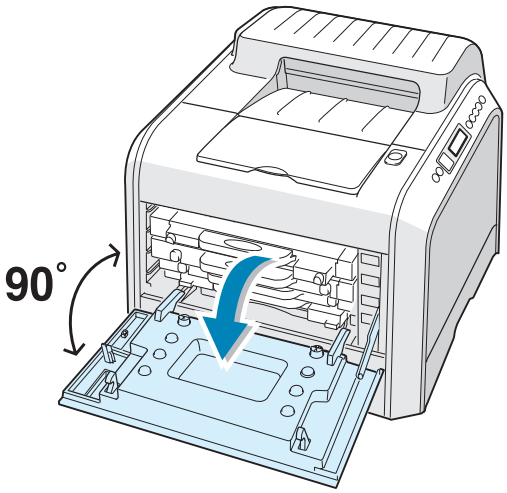


**CAUTION**: If the left cover A is not completely open, the top cover release button does not press.

3 Press the top cover release button to unlatch the top cover B and open it all the way.

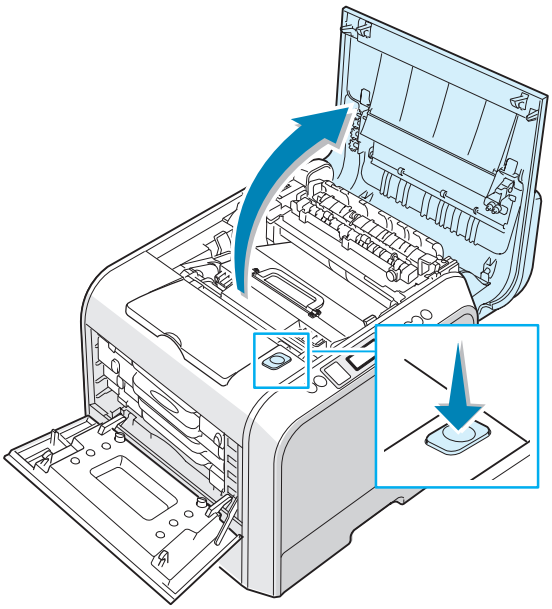

4 Carefully take the jammed paper out of the printer.

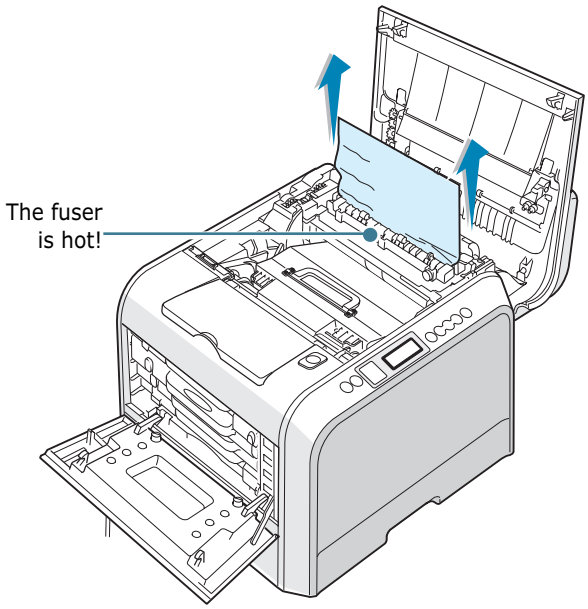


**CAUTION**: Do not touch the fuser. It is hot and could cause burns! The fuser's operating temperature is 180°C (356° F). Take care when removing paper from the printer.

5 After making sure that the left cover A is open, close the top cover B. Make sure that it is securely latched.

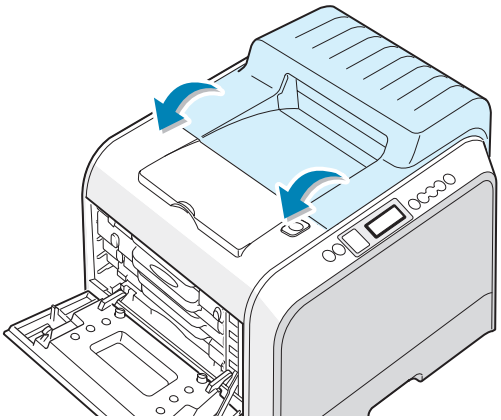

**CAUTION**: Do not try to close the left cover A with the top cover B open. This may cause damage to the printer.

6 Close the left cover A firmly.

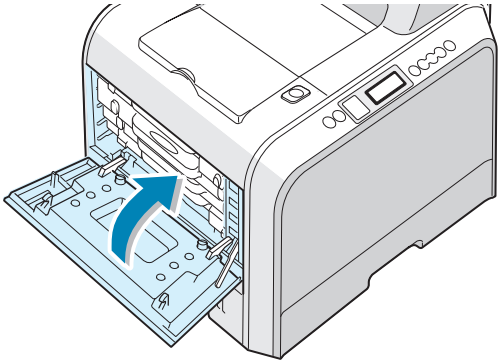

7 Open and close the right cover C to resume printing.

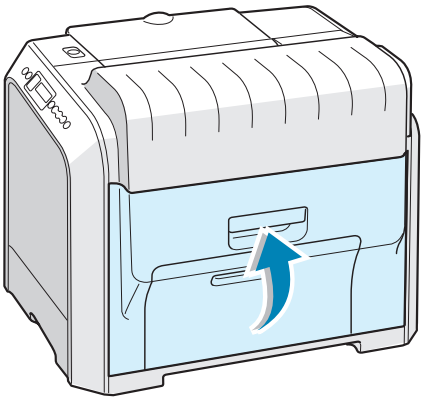

## Jam at Optional Tray 2

If paper is jammed in the optional tray2, 'Jam at Tray 2' appears on the display.

1 Using the handle, open the right cover C.

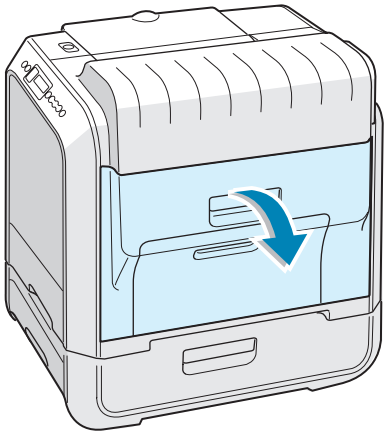

2 Remove the jammed paper in the direction shown. To avoid the paper tearing, pull it out gently and slowly. Go to step 10.

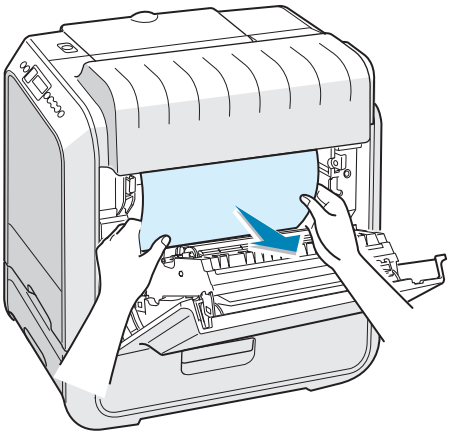

If you cannot find the jammed paper in the printer, go to step 3.

3 Open the outer jam cover D in Tray 2.

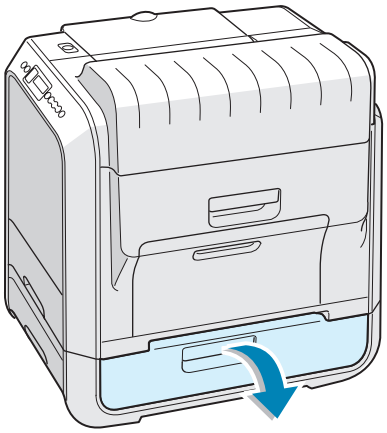

4 Open the inner cover of Tray 2.

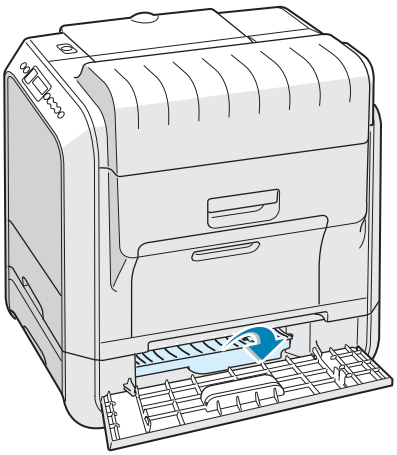

5 Pull the jammed paper out in the direction shown. To avoid the paper tearing, pull it out gently and slowly.

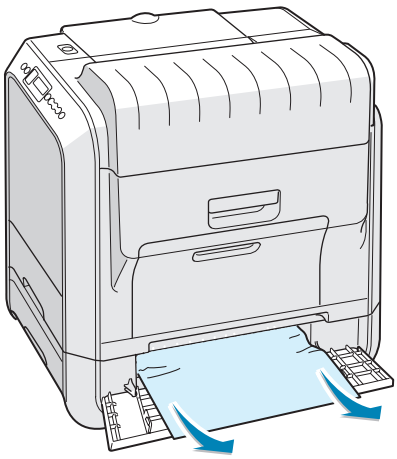

6 Close the two jam covers and go to step 10.

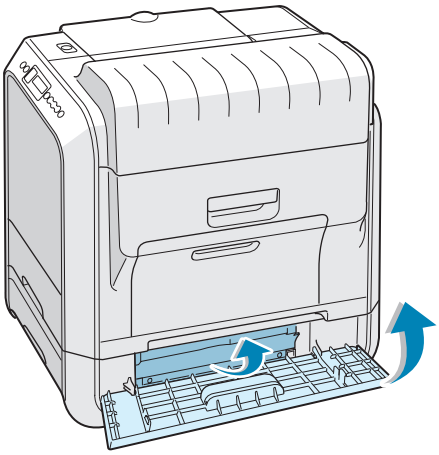

If there is any resistance, and paper does not move immediately when you pull, stop pulling and continue to step 7.

7 Pull the optional tray2, out of the printer.

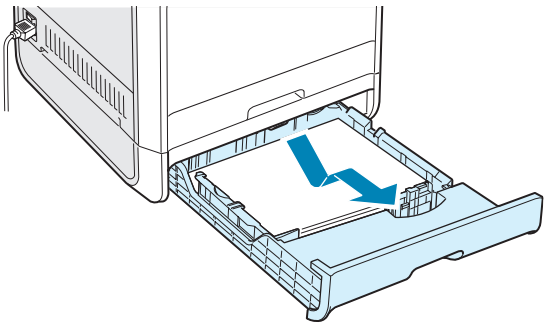

8 If you see the jammed paper, remove the paper from the printer by gently pulling it straight out.

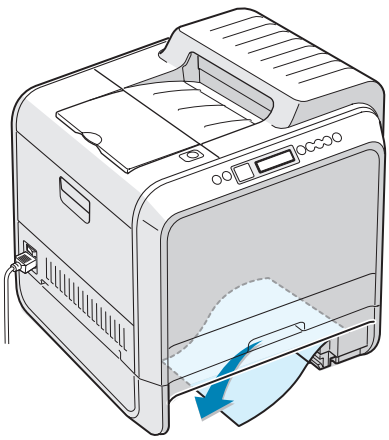

9 Slide the tray back into the printer and close the two jam covers.

10 Open and close the right cover C. The printer resumes printing.

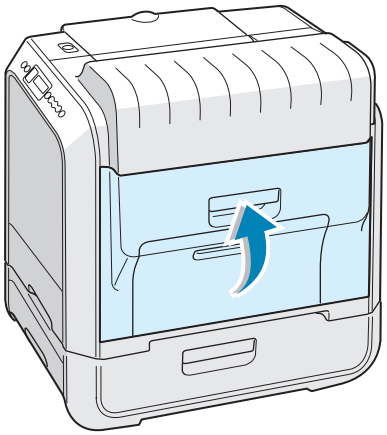

## Tips for Avoiding Paper Jams

By selecting the correct paper types, most paper jams can be avoided. If a paper jam occurs, follow the steps outlined in "Clearing Paper Jams" on page 7.6.

- Follow the procedures on page 2.4. Ensure that the adjustable guides are positioned correctly.
- Do not overload the paper tray. Ensure that the paper is below the paper limit mark on the inside wall of the tray.
- Do not remove the paper from the tray while printing.
- Flex, fan and straighten the paper before loading.
- Do not use creased, damp or highly curled paper.
- Do not mix paper types in the tray.
- Use only recommended paper and specialty media. See "Paper Specifications" on page E.3.
- Ensure that the print side is facing down when loading paper in the tray and in the Multi-purpose Tray.

# Solving Print Quality Problems

Dirt inside of the printer or improper paper loading may reduce the print quality. See the table below to troubleshoot the problem.

**NOTE**: Make sure that driver settings match the paper loaded in the tray.

| Problem | Solution |
|---|---|
| **Light or faded print**<br> <br> | If a vertical white streak or faded area appears on the page:<br>• The toner supply is low. You may be able to temporarily extend the toner cartridge life. See "Redistributing the Toner" on page 6.5. If this does not improve the print quality, install a new toner cartridge of faded color.<br>• The paper loaded in the tray does not meet media specifications. See "Paper Specifications" on page E.3.<br>• The surface of the Laser Scanning Unit (LSU) may be dirty. Clean the LSU. See page 6.30. |
| **Toner specs**<br> 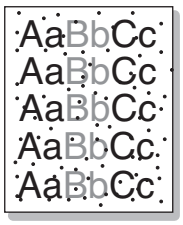 <br> | • The paper may not meet specifications (for example, the paper is too moist or too rough). See "Paper Specifications" on page E.3.<br>• The paper path may be dirty. See "Cleaning the Inside of the Printer" on page 6.31. |
| **Dropouts**<br> <br> | If faded areas appear randomly on the page:<br>• A single sheet of paper may be defective. Try reprinting the job.<br>• The paper's moisture content may be irregular or too moist. Try using a different brand or type of paper. See "Paper Specifications" on page E.3.<br>• The paper lot is bad. Try using a different brand or type of paper. See "Paper Specifications" on page E.3.<br>• The toner cartridge may be defective. See "Vertical repetitive defects" on the next page. |

| Problem | Solution |
|---|---|
| **Vertical lines**<br> 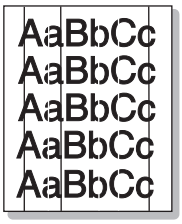 <br> | If black vertical streaks appear on the page:<br>• The imaging unit inside the printer has probably been scratched. Install a new imaging unit.<br><br>If white vertical lines appear on the page:<br>• The Laser Scanner window has probably been contaminated, clean the Laser Scanner window. Open and close left cover A several times to clean the Laser Scanning Unit (LSU). See "Cleaning the Laser Scanning Unit (LSU) Inside the Printer" on page 6.30. |
| **Color or Black background**<br> 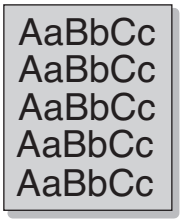 <br> | If the amount of background shading becomes unacceptable, the procedures below may fix the problem.<br>• Change to lighter weight pages. See "Paper Specifications" on page E.3.<br>• Check the printer's environment; very dry (low humidity) or high humidity (higher than 80% RH) conditions can increase the amount of background shading.<br>• Remove the old imaging unit and install a new one. See "Replacing the Imaging Unit" on page 6.14. |
| **Toner smear**<br> 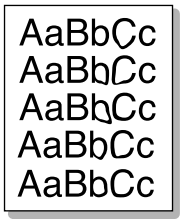 <br> | • Print several cleaning pages. See "Printing a Cleaning Page" on page 6.29<br>• Check the paper type and quality. See "Paper Specifications" on page E.3.<br>• Remove the transfer belt and install a new one. See "Replacing the Transfer Belt" on page 6.22. |
| **Vertical repetitive defects**<br> 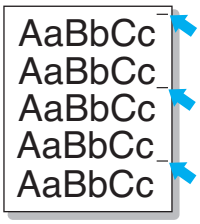 <br> | If marks repeatedly appear on the printed side of the page at even intervals:<br>• Clean the inside of the printer. See "Cleaning the Inside of the Printer" on page 6.31. After cleaning the inside of the printer, if you still have the same problems, install a new toner cartridge of defected color. See "Replacing the Toner Cartridges" on page 6.8.<br>• Parts of the printer may have toner on them. If the defects occur on the back of the page, the problem will likely correct itself after a few more pages.<br>• The fusing assembly may be damaged. Replace the fuser. |

| Problem | Solution |
|---|---|
| **Background scatter** 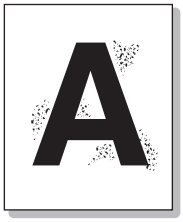 | Background scatter results from bits of toner distributed on the printed page.<br>• The paper may be too damp. Try printing with a different batch of paper. Do not open packages of paper until necessary so that the paper does not absorb too much moisture.<br>• If background scatter occurs on an envelope, change the printing layout to avoid printing over areas that have overlapping seams on the reverse side. Printing on seams can cause problems. |
| **Misformed characters** 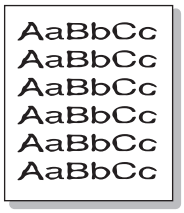 | • If characters appear as unfilled images or are incorrectly shaped, the paper may be too smooth. Try using a different brand or type of paper. See "Paper Specifications" on page E.3. |
| **Page skew** 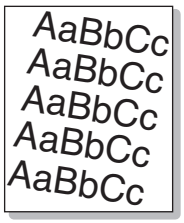 | • Check the paper type and quality. See "Paper Specifications" on page E.3.<br>• Make sure that the paper or specialty media is loaded correctly and the paper guides are placed securely against the paper stack. |
| **Curl or wave** 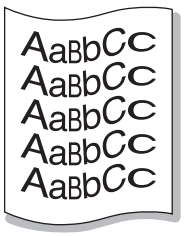 | • Check the paper type and quality. Both high temperature and humidity can cause paper curl. See "Paper Specifications" on page E.3.<br>• Turn the stack of paper over in the tray. Also try rotating the paper 180° in the tray. |
| **Wrinkles or creases** 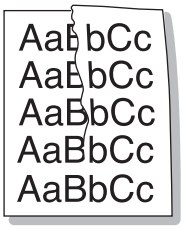 | • Ensure that the paper is loaded properly.<br>• Check the paper type and quality. See "Paper Specifications" on page E.3.<br>• Turn the stack of paper over in the paper tray. Also try rotating the paper 180° in the tray. |

| Problem | Solution |
|---|---|
| **Back of printouts are dirty**<br> 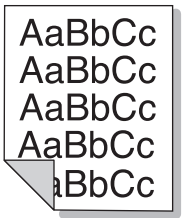 <br> | • The transfer roller may be dirty. See "Cleaning the Inside of the Printer" on page 6.31. |
| **Color or Black pages**<br> | • The imaging unit may not be installed properly. Remove the imaging unit and reinsert.<br>• The imaging unit may be defective and need replacing. Install a new imaging unit.<br>• The printer may require repair. |
| **Loose toner**<br> 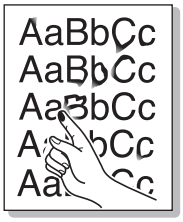 | • Clean the inside of the printer. See "Cleaning the Inside of the Printer" on page 6.31.<br>• Check the paper type and quality. See "Paper Specifications" on page E.3.<br>• If the problem persists, the printer may require repair. |
| **Horizontal stripes**<br> 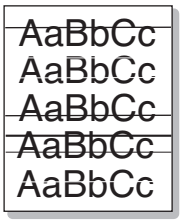 <br> | If horizontally aligned color or black streaks or smears appear:<br>• The imaging unit may be installed improperly. Remove the imaging unit and reinsert.<br>• The imaging unit may be defective. Install a new imaging unit. See "Replacing the Imaging Unit" on page 6.14. |

# Understanding Display Messages

Messages appear on the display on the control panel to indicate the printer's status or errors. Refer to the tables below to understand the message's meaning and correct the problem if necessary. Messages and their meanings are listed in alphabetical order.

For information on ordering replacement supplies, see page G.2 or contact your local reseller.

**NOTE**: When you call for service, it is very helpful to tell the service representative the display message.

| Message | Status | Do this... |
|---|---|---|
| ADC Not Confirm Error | A problem has occurred in the ADC in the printer. | Contact a service representative. |
| Cover Open | The top cover B is open. | Close the top cover B firmly. |
| CTD Calibration Error | The Color Toner Density (CTD) sensor is polluted by dust or toner. | Contact a service representative. |
| Dev. Motor Error | A problem has occurred in the development motor of the printer. | Unplug the power cord and plug it in again. If the problem persists, please call for service. |
| Fuser Error Low Temperature | The temperature in the fuser is abnormally low. | Unplug the power cord and plug it in again. If the problem persists, please call for service. |
| Fuser Error High Temperature | The temperature in the fuser is abnormally high. | Unplug the power cord and plug it in again. If the problem persists, please call for service. |
| Inside Cover D Open | Cover D is open. | Close Cover D firmly. |
| Install [Color] Toner | The indicated color toner cartridge is not installed in the printer. | Install the corresponding color toner cartridge. |
| Install Imaging Unit | The imaging unit is not installed in the printer. | Install the imaging unit. |
| Install Transfer Belt | The transfer belt is not installed in the printer. | Install the transfer belt. |

| Message | Status | Do this... |
|---|---|---|
| Invalid [Color] Toner | An invalid toner cartridge is installed. | Only install a Xerox-approved toner cartridge, designed for your printer. If you have installed an approved toner cartridge and this error still occurs contact an authorized service agent. |
| Invalid Transfer Belt | An invalid transfer belt is installed. | Only install a Xerox-approved transfer belt, designed for your printer. If you have installed an approved transfer belt and this error still occurs contact an authorized service agent. |
| IP Conflict | An IP address conflicts with other devices on the network. | Contact your network administrator and choose an address within your subnet which will not conflict with any other devices. |
| Jam at [Tray] | A paper jam has occurred from the indicated tray. | Remove the jammed paper from the corresponding tray, referring to page 7.7. |
| Jam at B,C | A paper jam has occurred in the paper exit area. | Remove the jammed paper from the printer, referring to page 7.14. |
| Jam at C | A paper jam has occurred while printing on both sides of the paper. | Remove the jammed paper from the printer, referring to page 7.10. |
| Jam at C | A paper jam has occurred inside the printer. | Open the right cover C and remove the jammed paper from the printer, referring to page 7.9. |
| Laser Unit Error | A problem has occurred in the LSU (Laser Scanning Unit) in the printer. | Turn off the printer. Unplug the power cord and plug it in again. Turn on the printer. If the problem persists, please call for service. |
| Load [Size] In Tray [X] | The paper size specified in the printer properties does not match the paper you are loading. | Load the correct paper in the tray. |
| Load Manual Press Cont Key | The Multi-purpose Tray is empty in the manual feed mode. | Load a sheet of paper and press the **On Line/Continue** button. You need to press the button for each page to be printed. |

| Message | Status | Do this... |
|---|---|---|
| Main Motor Error | A problem has occurred in the main motor of the printer. | Unplug the power cord and plug it in again. If the problem persists, please call for service. |
| Memory Overflow | The printer does not have enough memory to print the current job. | Simplify the page layout and remove unnecessary graphics from your document. |
| Page Too Complex | Too much complicated data was sent to the printer. | Simplify the page layout and remove unnecessary graphics from your document. |
| Ready [Color] Low Toner | The corresponding toner cartridge in your printer is low. | Order a replacement toner cartridge. |
| Replace [Color] Toner | The corresponding toner cartridge in your printer is empty. | Replace the corresponding toner cartridge with a new one. See page 6.8. |
| Replace Fuser Soon | The fuser is nearing the end of its life. | • Order a replacement fuser.<br>• When the printout is too light, replace the fuser.<br>• You can select whether or not this message displays on the control panel. See page 5.11. |
| Replace Fuser | The fuser is not installed or is at the end of its life | • Order a replacement fuser.<br>• When the printout is too light, replace the fuser.<br>• You can select whether or not this message displays on the control panel. See page 5.11. |
| Replace Imaging Unit | The imaging unit is at the end of its life. | • Order a replacement imaging unit.<br>• When the printout is too light, replace the imaging unit.<br>• You can select whether or not this message displays on the control panel. See page 5.11. |
| Replace Imaging Unit Soon | The lifetime of the imaging unit is nearing the end of its life. | Replace the imaging unit with a new one. See page 6.14. |

| Message | Status | Do this... |
|---|---|---|
| Replace Transfer Belt | The transfer belt is at the end of its life. | • Order a replacement transfer belt.<br>• When the printout is too light, replace the transfer belt.<br>• You can select whether or not this message displays on the control panel. See page 5.11. |
| Replace Transfer Belt Soon | The lifetime of the transfer belt is nearing the end of its life. | Replace the transfer belt with a new one. See page 6.22. |
| Replace Transfer Roller | The lifetime of the transfer roller is ended. | Order a replacement transfer roller. |
| Replace Transfer Roller Soon | The transfer roller is nearing the end of its life. | Order a replacement transfer roller. |
| Transfer Belt Error | The transfer belt is either not working or not correctly installed in the printer. | Replace the transfer belt.<br>OR<br>Make sure that installed transfer belt is properly seated. |
| Tray2 Error | Optional Tray2 is not properly installed or connected to the printer. | After turn the printer off and then back on, reinstall the optional tray2. If the message persists, contact a service representative. |
| Waste Box Full/ Not Installed | The waste cartridge is full. | Replace the waste cartridge with a new one. See page 6.11. |
| Waste Motor Error | A problem has occurred in waste toner motor. | Turn the printer off then turn it back on. If the error still occurs, contact a service representative. |

# Common Windows Problems

| Problem | Possible Cause and Solution |
|---|---|
| "File in Use" message appears during installation. | Exit all software applications. Remove all software from the StartUp Group, then restart Windows. Reinstall the printer driver. |
| "Error Writing to LPTx" message appears. | • Ensure that the cables are connected correctly and the printer is on.<br>• If bi-directional communication is not turned on in the driver, it will also cause this message. |
| "General Protection Fault", "Exception OE", "Spool32", or "Illegal Operation" messages appear. | Close all other applications, reboot Windows and try printing again. |

**NOTE**: Refer to the Microsoft Windows 98/Me/NT 4.0/2000/XP/Server 2003 User Guide that came with your PC for further information on Windows error messages.

# Common Macintosh Problems

## Problems in the Chooser

| Problem | Possible Cause and Solution |
|---|---|
| The printer driver icon does not appear in Chooser. | Software is not installed correctly.<br>• Install the printer driver.<br>• Make sure that you are using a high-quality cable. |
| The printer name does not appear in the Chooser. | • Make sure that the cables are connected correctly and the printer is turned on.<br>• Check if "Ready" appears on the display of the control panel. If not, press the **On Line/Continue** button to switch your printer to on-line.<br>• Make sure that the correct printer driver has been selected in Chooser. |

## Printing Errors

| Problem | Possible Cause and Solution |
|---|---|
| You cannot use the computer while the printer is printing. | Background Printing has not been selected.<br>• Select Background in the printer's properties. |

# Common Linux Problems

| Problem | Possible Cause and Solution |
|---|---|
| I can't change settings in the configuration tool. | You need to have administrator privileges to be able to change global settings. |
| I am using the KDE desktop but the configuration tool and LLPR won't start. | You may not have the GTK libraries installed. These usually come with most Linux distributions, but you may have to install them manually. Refer to your distribution's installation manual for more details about installing additional packages. |
| I just installed this package but can't find entries in the KDE/Gnome menus. | Some versions of the KDE or GNOME desktop environments may require that you restart your session for the changes to take effect. |
| I get a "Some options are not selected" error message while editing the printer settings. | Some printers have conflicting settings, meaning that some settings for two options can't be selected at the same time. When you change a setting and the Printer Package detects such a conflict, the conflicting option is changed to a "No Choice" value. You have to choose an option that does not conflict before being able to submit the changes. |
| I can't make a printer the system default. | In some conditions, it may not be possible to change the default queue. This happens with some variants of LPRng, especially on recent RedHat systems that use the "printconf" database of queues.<br><br>When using printconf, the **/etc./printcap** file is automatically refreshed from the database of printers managed by the system (usually through the "printtool" command), and the queues in **/etc./printcap.local** are appended to the resulting file. The default queue in LPRng is defined as the first queue in **/etc./printcap**, therefore it is not possible for the Linux Printer Package to change the default when some queues have otherwise been defined using printtool.<br><br>LPD systems identify the default queue as the one named "lp". Thus, if there is already a queue by this name, and if it doesn't have any alias, then you won't be able to change the default. To work around this, you can either delete the queue or rename it by manually editing the **/etc./printcap** file. |
| The N-up setting does not work correctly for some of my documents. | The N-up feature is achieved through post-processing of the PostScript data that is being sent to the printing system. However, such post-processing can only be adequately achieved if the PostScript data conforms to the Adobe Document Structuring Conventions. Problems may arise when using N-up and other features relying on post-processing if the document being printed isn't compliant. |

| Problem | Possible Cause and Solution |
|---|---|
| I am using BSD lpr (Slackware, Debian, older distributions) and some options chosen in LLPR don't seem to take effect. | Legacy BSD lpr systems have a hard limitation on the length of the option string that can be passed to the printing system. As such, if you selected a number of different options, you may exceed the length of the options and some of your choices won't be passed to the programs responsible for implementing them. Try to select less options that deviate from the defaults, to save on memory usage. |
| I am trying to print a document in Landscape mode, but it prints rotated and cropped. | Most Unix applications that offer a Landscape orientation option in their printing options will generate correct PostScript code that should be printed as is. In that case, you need to make sure that you leave the LLPR option to its default Portrait setting, to avoid unwanted rotations of the page that would result in a cropped output. |
| Some pages come out all white (nothing is printed), and I am using CUPS. | If the data being sent is in Encapsulated PostScript (EPS) format, some earlier versions of CUPS (1.1.10 and before) have a bug preventing them from being processed correctly. When going through LLPR to print, the Printer Package will work around this issue by converting the data to regular PostScript. However, if your application bypasses LLPR and feeds EPS data to CUPS, the document may not print correctly. |
| I can't print to a SMB (Windows) printer. | To be able to configure and use SMB-shared printers (such as printers shared on a Windows printer), you need to have a correct installation of the SAMBA package that enables that feature. The "smbclient" command should be available and usable on your system. |
| My application seems to be frozen while LLPR is running. | Most Unix applications will expect a command like the regular "lpr" command to be non-interactive and thus return immediately. Since LLPR is waiting for user input before passing the job on to the print spooler, very often the application will wait for the process to return, and thus will appear to be frozen (its windows won't refresh). This is normal and the application should resume functioning correctly after the user exits LLPR. |
| How do I specify the IP address of my SMB server? | It can be specified in the "Add Printer" dialogue of the configuration tool, if you don't use the CUPS printing system. Unfortunately, CUPS currently doesn't allow you to specify the IP address of SMB printers, so you will have to be able to browse the resource with Samba in order to be able to print. |
| Some documents come out as white pages when printing. | Some versions of CUPS, especially those shipped with Mandrake Linux before the 8.1 release, have some known bugs when processing the PostScript output from some applications. Try upgrading to the latest version of CUPS (at least 1.1.14). Some RPM packages for the most popular distributions are provided as a convenience with this Linux Printing Package. |

| Problem | Possible Cause and Solution |
|---|---|
| I have CUPS and some options (such as N-up) seem to be always enabled even though I don't choose them in LLPR. | There may be some local options defined in your **~/.lpoptions** file, which are manipulated by the lpoptions command. These options are always used if not overridden by LLPR settings. To get rid of all options for a printer, run the following command, replacing "printer" with the name of the queue: lpoptions -x printer |
| I configured a printer to print to a file, but I get "Permission denied" errors. | Most printing systems will not run as the super-user but as a special user (usually "lp"). Therefore, make sure that the file you have chosen to print to is accessible to the user owning the spooler daemon. |
| On my PCL (or GDI) printer, I sometimes get error messages printing instead of my document. | Unfortunately, some Unix applications may generate non-compliant PostScript output that may not be supported by Ghostscript, or even the printer itself in PostScript mode. You can try to capture the output to a file and view the results with Ghostscript (gv or ghostview will allow you to do so interactively) and see if you get error messages. However, since the application is at fault probably, contact your software vendor to inform them of the issue. |
| Some color images come out all black. | This is a known bug of Ghostscript (until GNU Ghostscript version 7.05) when the base color space of the document is indexed color space and it is converted through CIE color space. Because Postscript uses CIE color space for Color Matching System, you should upgrade Ghostscript on your system at least GNU Ghostscript version 7.06 or later. You can find the recent Ghostscript at www.ghostscript.com. |

# MEMO

# A

# Using Your Printer with a Macintosh

This chapter includes Macintosh information.

# Software for Macintosh

Your printer supports Macintosh systems with a built-in USB interface. When you print a file from a Macintosh computer, you can use the SPLC driver to support your printer's major printing features.

## System Requirements

To use your printer and its software with a Macintosh, your system should have:

**Macintosh Hardware Requirement:**

- One of the following Macintosh models:
  -Power Macintosh series
  -Power Macintosh G3, G4
  -iMac series
  -PowerBook series
  -iBook series
- USB interface

**NOTE**: Your printer must be connected directly to your Macintosh using a USB cable. The Phaser 6100 printer does not currently support printing over a network connection from any Macintosh Operating System. For information about future network capability, see Appendix G for the Phaser 6100 Support web site.

**Macintosh System Requirement:**

Macintosh OS 9.x

**NOTES**:

- The Phaser 6100 printer does not support PostScript printing. Ensure that the application you are using does not expect to be able to use PostScript.
- For information on printer driver installation, printing features, and Macintosh OS X support, see Appendix G for the Phaser 6100 Support web site.

# B Using Your Printer in Linux

You can use your printer in a Linux environment.

This chapter includes:

- **Installing the Printer Driver**
- **Using the Configuration Tool**
- **Changing LLPR Properties**

# Installing the Printer Driver

## System Requirements

### Supported OS

- Redhat 6.2/7.0/7.1 and above
- Linux Mandrake 7.1/8.0 and above
- SuSE 6.4/7.0/7.1 and above

### Recommended Requirements

- Pentium II or PowerPC G3
- RAM 64 MB or higher
- Hard drive 20 MB or higher

### Software

- Glibc 2.1 or higher
- GTK+ 1.2 or higher
- Ghostscript

## Installing the Printer Driver

1. Make sure that you connect the printer to your computer. Turn both the computer and the printer on.

2. When the Administrator Login window appears, type in "**root**" in the Login field and enter the system password.

**NOTE**: You must log in as a super user (root) to install the printer software. If you are not the super user, ask your system administrator.

3. Insert the printer software CD-ROM. The CD-ROM automatically runs.

**NOTE**: If the CD-ROM does not automatically run, click the icon at the bottom of the window. When the Terminal screen appears, type in:
[root@local /root]# **cd /mnt/cdrom** (the CD-ROM directory)
[root@local cdrom]# **./setup.sh**

4 Select the installation type, either **Recommended** or **Expert**, and then click **Continue**.

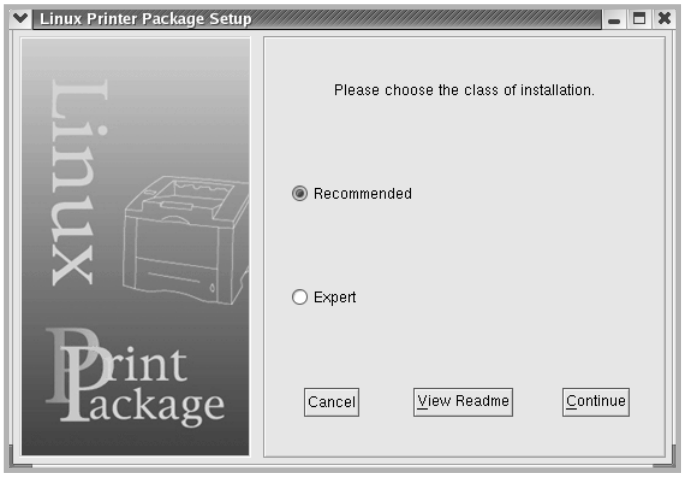


**Recommended** is fully automated and no interaction is required. **Expert** installation allows you to select the install path or printing system.

5 If you selected **Recommended**, go to Step 6.

For **Expert**, select an option and then click **Begin Install**.

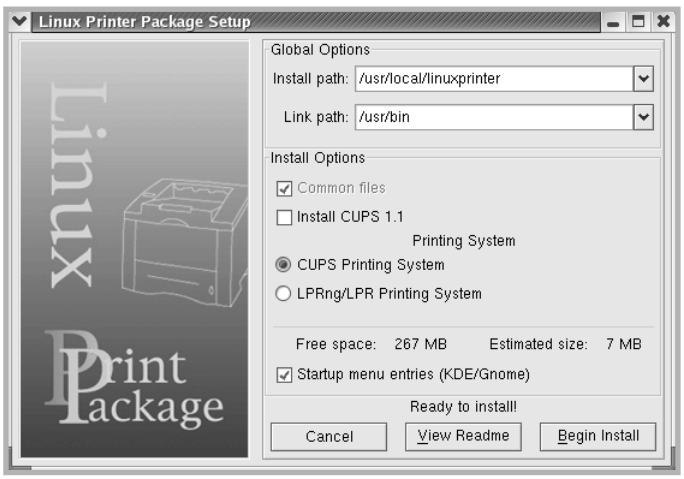


B

6 The printer driver installation begins. When the installation is completed, click **Start**.

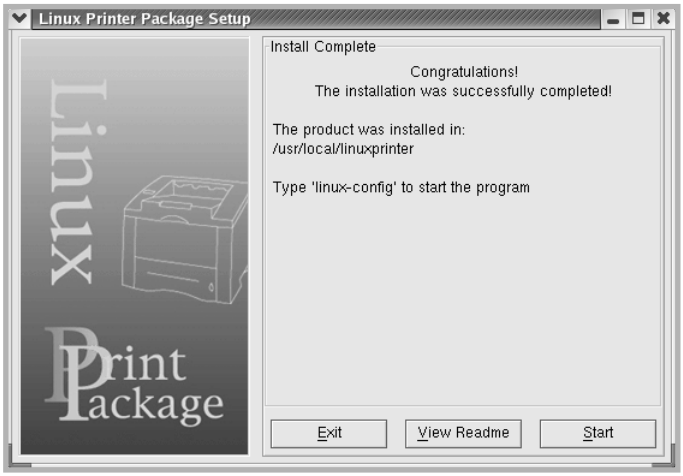


7 The Linux Printer Configuration window opens. Click the **Add Printer** icon on the tool bar at the top of the window.

**NOTE**: Depending on the printing system in use, the Administrator Login window may appear. Type in "**root**" in the Login field and enter the system password.

8 You see the printers currently added to your system. Select the printer you want to use. The function tabs available for the selected printer appear at the top of the Add a Printer window.

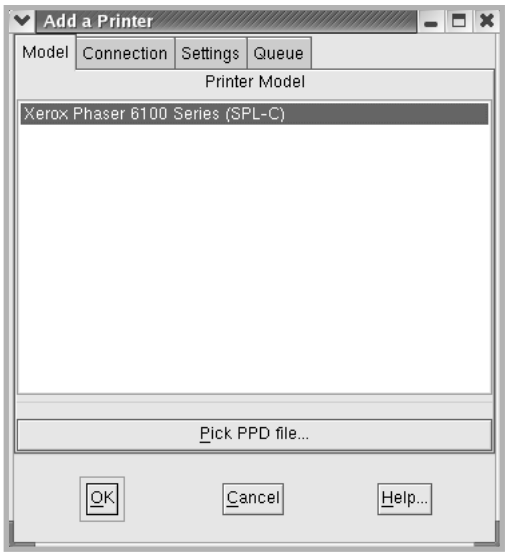

9 Click the **Connection** tab and ensure that the printer port is set properly. If not, change the device setting.

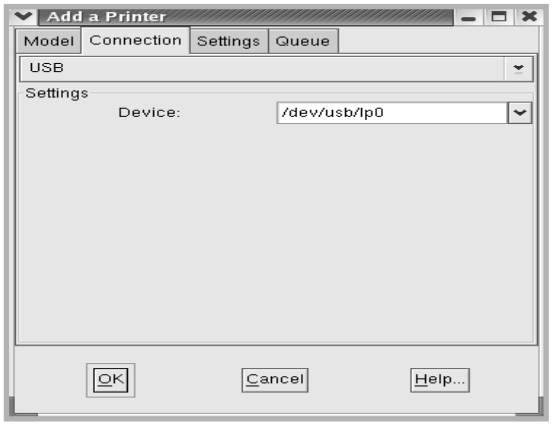


10 You can use the **Settings** tab and the **Queue** tab to view the printer's current settings. If necessary, you can change the settings.

**NOTE**: The options may differ depending on the printer in use. The Description and the Location field in the Queue screen may not appear depending on the printing system in use.

11 To exit, click **OK**.

12 When the window prompts that the new printer is successfully configured, click **OK**.

13 The Linux Printer Configuration window reappears. You can view the information about your printer from the **Info** tab. If necessary, you can change the printer's configuration. For details about changing the printer's configuration, see "Using the Configuration Tool" on page B.8.

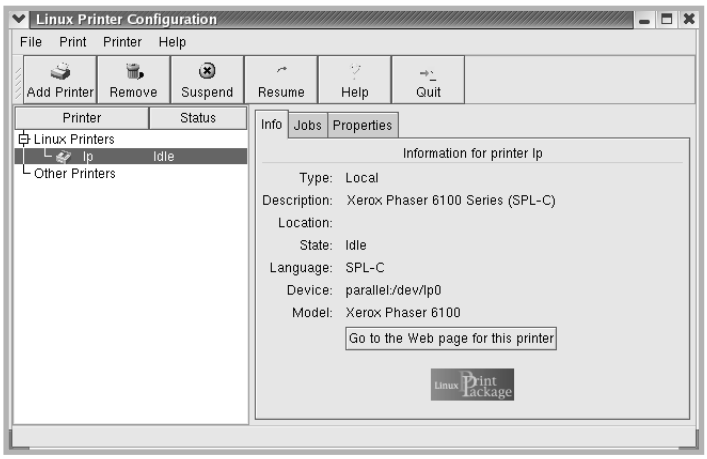


B

## Changing the Printer Connection Method

If you change the printer connection method from USB to parallel or vice versa while in use, you must re-configure your Linux printer by adding the printer to your system. Take the following steps:

1. Make sure that you connect the printer to your computer. Turn both the computer and the printer on.

2. When the Administrator Login window appears, type in "**root**" in the Login field and enter the system password.

**NOTE**: You must log in as a super user (root) to install a new printer to the printing system. If you are not the super user, ask your system administrator.

3. From the Startup Menu icon at the bottom of the desktop, select **Linux Printer** and then **Configuration Tool**.

   You can also access the Linux Printer Configuration window by typing "**linux-config**" in the Terminal screen.

4. When the Linux Printer Configuration window appears, click the **Add Printer** icon on the tool bar at the top of the window.

5. Click the **Connection** tab at the top of the Add a Printer window.

   Ensure that the printer port is set properly. If not, change the device setting.

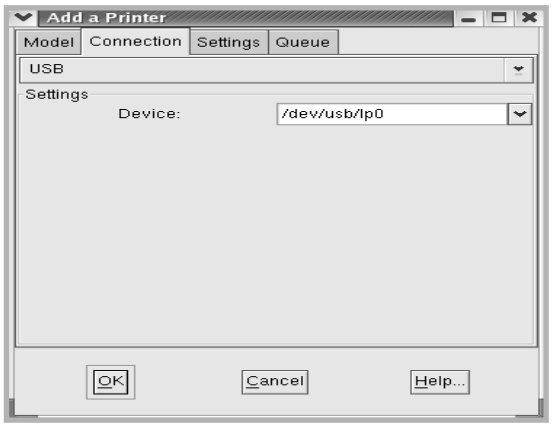


6. Click **OK**.

## Uninstalling the Printer Driver

1 From the Startup Menu icon at the bottom of the desktop, select **Other** and then **Configuration Tool**.

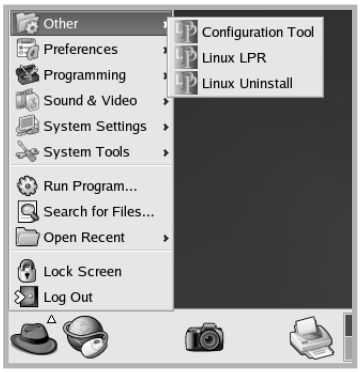


You can also access the Linux Printer Configuration window by typing "**linux-config**" in the Terminal screen.

2 In the Linux Printer Configuration window, select the **Uninstall** command from the **File** menu.

3 The Administrator Login window appears. Type in "**root**" in the Login field and enter the system password. Click **Proceed**.

**NOTE**: You must log in as a super user (root) to uninstall the printer software. If you are not the super user, ask your system administrator.

4 A message window appears asking you to confirm the uninstallation. Click **Yes**.

5 Select **Complete uninstall** and then click **Uninstall**.

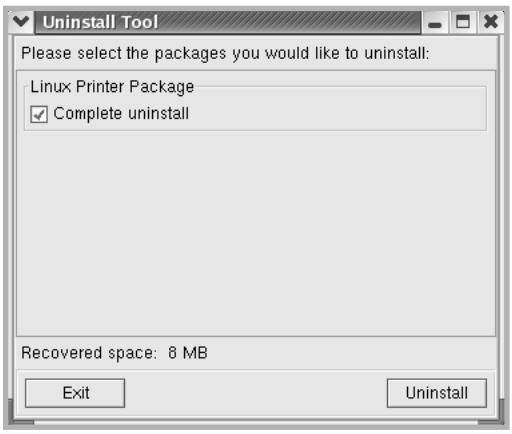

6 Click **OK** to begin uninstallation.

7 When the uninstallation is completed, click **Finished**.

## Using the Configuration Tool

The configuration tool accesses administrative tasks, including adding and removing a new printer, and changing their global settings. Regular users can also run it to easily inspect job queues, examine the printer properties and change their local preferences.

To access the Configuration Tool:

1 From the Startup Menu icon at the bottom of the screen, select **Linux Printer** and then **Configuration Tool**. The Linux Printer Configuration window appears.

You can also open this window from the Terminal screen by typing in "**linux-config**."

2 The Linux Printer Configuration window shows a list of installed printers in the left pane. The right pane shows a number of tabs that display information regarding the currently selected printer.

Select your printer, if not currently selected.

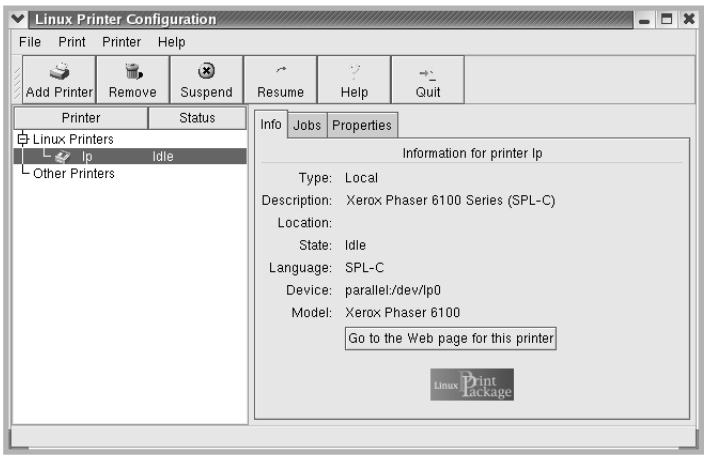

3 The **Info** tab shows general information about the printer.

If you are an Internet user, you can click **Go to the Web page for this printer** to access the web page.

Click the **Jobs** tab to inspect and manage the job queue for the selected printer. You can suspend, resume or delete a specific job(s) in the queue. If you drag a specific job(s), you can drop it into the print queue of another printer.

The **Properties** tab allows you to change the default printer settings.

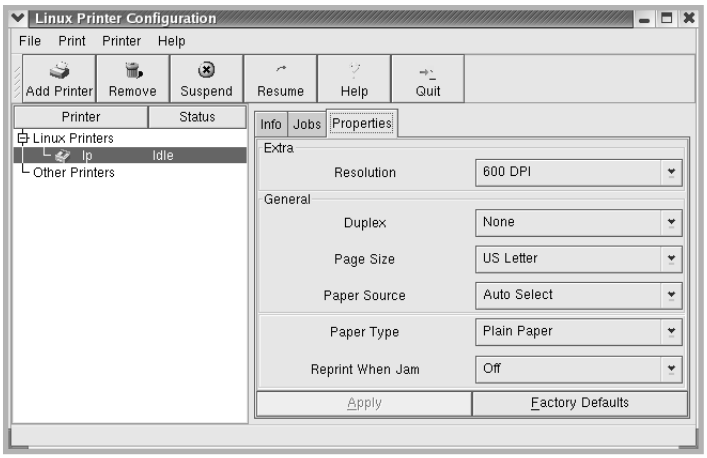


**NOTE**: Regular users are able to override the system-wide default settings defined by the administrator. When a regular user clicks **Apply**, these custom settings are saved in the user's profile and may be later used with LLPR. If the administrator is running the configuration tool, then the settings are saved as the new global defaults.

B

# Changing LLPR Properties

You can fine tune the printer's properties by opening the LLPR Properties window.

To open the LLPR Properties window:

1 From the application you are using, select the **Print** command.

2 When the Linux LPR window opens, click **Properties**.

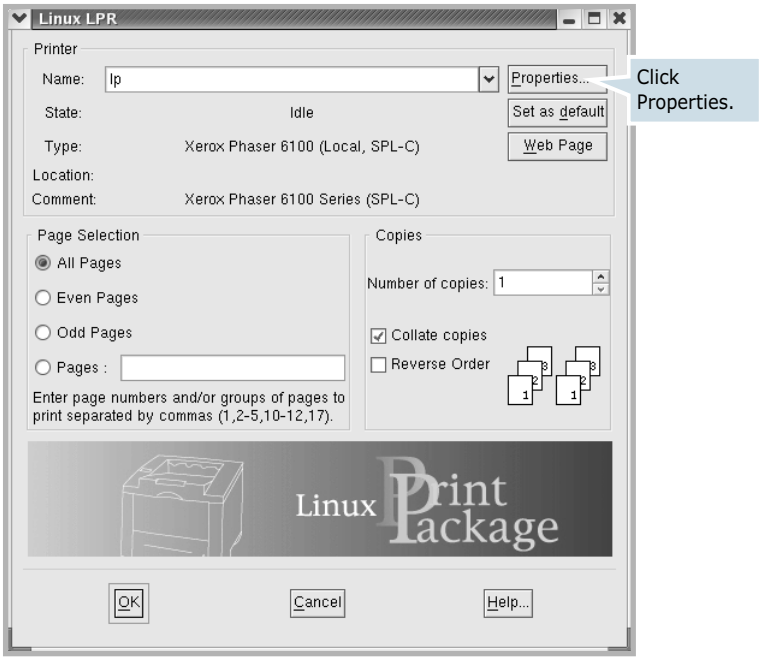


You can also open the LLPR window:

- Click the Startup Menu icon at the bottom of the screen and select **Linux Printer** and then **Linux LPR**.
- If the Linux Printer Configuration window is currently open, select **Test Print** from the **Print** menu.

3 The LLPR Properties window opens.

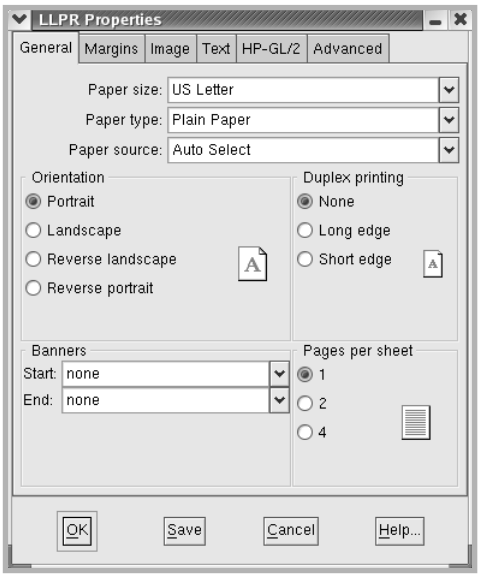


The following six tabs are at the top of the window:

- **General** - allows you to change the paper size, the paper type, the paper source, the orientation of the documents; enables the duplex feature, adds start and end banners, and changes the number of pages per sheet.
- **Margins** - allows you to specify the page margins. These margins do not apply when printing regular PostScript data.
- **Image** - allows you to set image options that are used when printing image files, i.e. when a non-PostScript document is passed to LLPR on the command line. Color settings will also take effect for postscript documents.
- **Text** - allows you to select the density of the text and turn the syntax coloring on or off.
- **HP-GL/2** - allows you to set default options to print documents in the HP-GL/2 format, which is used by some plotters.
- **Advanced** - allows you to override the default settings for the printer.

If you click the **Save** button at the bottom of the window, the options are kept between LLPR sessions.

Use the **Help** button to view details about the options in the window.

4 To apply the options, click **OK** in the **LLPR Properties** window. You are returned to the **Linux LPR** window. To start printing, click **OK**.

# MEMO

# C Using Your Printer on a Network

If you work in a networked environment, the printer can be shared by other users on the network.

This chapter includes:

- **About Sharing the Printer on a Network**
- **Setting Up a Locally Shared Printer**
- **Setting Up a Network-Connected Printer**

# About Sharing the Printer on a Network

If you work in a networked environment, you can connect your printer to the network.

## Locally-Shared Printer

You can connect the printer directly to a selected computer, which is called the "host computer" on the network. The printer can then be shared by other users on the network through a Windows 98/Me/XP/NT 4.0/2000/Server 2003 network printer connection.

## Wired Network-connected Printer

A Phaser 6100DN printer has the built-in network interface.

## Printing Across a Network

Whether the printer is locally connected or network-connected, you need to install the Phaser 6100 printer software on each computer that prints documents using the printer.

# Setting Up a Locally Shared Printer

## In Windows 98/Me

### Setting Up the Host Computer

1. Start Windows.
2. From the **Start** menu, select **Control Panel** from **Settings** and double-click on the **Network** icon.
3. Check the **File and Print Sharing** box, and click **OK**. Close the window.
4. From the **Start** menu, select **Printers** from **Settings** and double-click your printer name.
5. Select **Properties** in the **Printer** menu.
6. Click the **Sharing** tab and check the **Shared As** box. Fill in the **Shared Name** field and click **OK**.

### Setting Up the Client Computer

1. Right-click the Windows **Start** button and select **Explorer**.
2. Open your network folder in the left column.
3. Right-click the shared name and select **Capture Printer Port**.
4. Select the port you want, check the **Reconnect at log on box**, and click **OK**.
5. From the **Start** menu, select **Settings** and then **Printers**.
6. Double-click your printer icon.
7. From the **Printer** menu, select **Properties**.
8. From the **Details** tab, select the printer port and click **OK**.

## In Windows NT 4.0/2000/XP/Server 2003

### Setting Up the Host Computer

1. Start Windows.

2. For Windows NT 4.0/2000, select **Settings**, and **Printers** from the Start menu.

   For Windows XP/Server 2003, select **Printers and Faxes** from the Start menu.

3. Double-click your printer icon.

4. From the **Printer** menu, select **Sharing**.

5. For Windows NT 4.0, check the **Shared** box.

   For Windows 2000, check the **Shared As** box.

   For Windows XP/Server 2003, check the **Share this printer** box.

6. Fill in the **Shared Name** field and click **OK**.

## Setting Up the Client Computer

1. Right-click the Windows **Start** button and select **Explorer**.
2. Open your network folder in the left column.
3. Click the shared name.
4. For Windows NT 4.0/2000, select **Settings** and **Printers** from the **Start** menu.

   For Windows XP/Server 2003, select **Printers and Faxes** from the **Start** menu.
5. Double-click your printer icon.
6. From the **Printer** menu, select **Properties**.
7. From the **Ports** tab, click **Add Port**.
8. Select **Local port** and click **New Port**.
9. Fill in the **Enter a port name** field, enter the shared name.
10. Click **OK** and click **Close**.
11. For Windows NT 4.0, click **OK**.

    For Windows 2000/XP/Server 2003, click **Apply** and click **OK**.

# Setting Up a Network-Connected Printer

You have to set up the network protocols on the printer to use it as your network printer. Setting protocols can be accomplished by using CentreWare Internet Services (IS).

To access CentreWare IS:

1. Launch your web browser.
2. Enter your printer's IP address in the browser's **Address** field (http://xxx.xxx.xxx.xxx).

The CentreWare Internet Services (IS) screen appears. Access printer status and manage your printer over a TCP/IP network using a web browser.

You can configure the basic network parameters through the printer's control panel. Use the printer control panel to do the following:

- Enable or disable network protocols (TCP/IP, LPD)
- Configure TCP/IP

# Configuring Network Parameters on the Control Panel

## Supported Operating Systems

| Item | Requirements |
|---|---|
| Network Interface | 10/100 Base-TX (standard for Phaser 6100DN) |
| Network Operating System | • Windows 98/Me, NT 4.0/2000/XP/ Server 2003<br>• Linux RedHat 6.2/7.0/7.1 and higher<br>• Linux Mandrake 7.1/8.0 and higher<br>• SuSE 6.4/7.0/7.1 and higher |
| Network Protocols | • LPD (LPR), Port9100 on Windows NT, Linux |
| Dynamic Addressing Server | • DHCP, BOOTP |

• TCP/IP: Transmission Control Protocol/Internet Protocol
• DHCP: Dynamic Host Configuration Protocol
• BOOTP: Bootstrap Protocol

## Printing a Network Connection Page

The Network Connection page shows how the network interface card on your printer is configured. The default settings which are suitable for most applications are enabled.

1. In ready mode press the **Menu** button ( ) until you see 'Information' on the bottom line of the display.

2. Press the **OK** button ( OK ) to access the menu.

3. Press the scroll button ( ◀ or ▶ ) until 'Connection Pg' displays on the bottom line.

4. Press the **OK** button ( OK ).

   The Network Connection page prints out.

## Setting Network Protocols

When you first install the printer, all supported network protocols are enabled when you turn the printer on. If a network protocol is enabled, the printer may actively transmit on the network even when the protocol is not in use. This may increase network traffic slightly. To eliminate unnecessary traffic, you can disable unused protocols.

## Configuring TCP/IP

Your printer can be set up on a variety of TCP/IP networks. There are several ways in which your printer can be assigned a TCP/IP address, depending on your network.

- Static Addressing: TCP/IP address is assigned manually by the system administrator.
- Dynamic Addressing BOOTP/DHCP (default): TCP/IP address is assigned automatically by the server.

1. In ready mode press the **Menu** button ( ) until you see 'Network Setup' on the bottom line of the display.
2. Press the **OK** button ( OK ) to access the menu.
3. Press the scroll button ( ◀ or ▶ ) until 'Configure TCP' displays on the bottom line. Press the **OK** button ( OK ).
4. Press the scroll button ( ◀ or ▶ ) to display 'Yes' and press the **OK** button ( OK ). The IP Source screen appears.
5. Press the scroll button ( ◀ or ▶ ) to select one of the following options, then press the **OK** button ( OK ):
   - Static: See "Static Addressing" on page C.8
   - BOOTP: See "Dynamic Addressing (BOOTP/DHCP)" on page C.9
   - DHCP: See "Dynamic Addressing (BOOTP/DHCP)" on page C.9

### Static Addressing

To enter the TCP/IP address from your printer's control panel, take the following steps:

1. Press the **OK** button ( OK ) to access the IP Address menu.

   An IP address consists of 4 bytes.

Enter a number between 0 and 255 for each byte.

2. Press the scroll button ( ◀ or ▶ ) to enter a number between 0 and 255 and press the **OK** button ( OK ).

3 Repeat Step 2 to complete the address from the 1st byte to the 4th byte.

4 To select other parameters, such as the Subnet Mask or Gateway, press the scroll button (◀ or ▶). Press the **OK** button ( OK ).

5 Repeat steps 2 through 4 to configure the other TCP/IP parameters.

### Dynamic Addressing (BOOTP/DHCP)

To assign the TCP/IP address automatically by the server, take the following steps:

1 Press the scroll button (◀ or ▶) until 'BOOTP' or 'DHCP' is displayed on the bottom line. Press the **OK** button ( OK ).

2 Press the scroll button (◀ or ▶) to display 'YES' and press the **OK** button ( OK ).

## Resetting the Network Interface Card

You can reset the network interface card when the connection to the network is lost.

1 Press the **Menu** button ( ) until you see 'Network Setup' on the bottom line of the display.

2 Press the **OK** button ( OK ) to access the menu.

3 Press scroll button (◀ or ▶) until 'Reset Network' displays on the bottom line.

4 Press the **OK** button ( OK ) to confirm the selection.

## Resetting the Network Configuration

You can return the network configuration to its default settings.

1. Press the **Menu** button ( ) until you see 'Network Setup' on the bottom line of the display.
2. Press the **OK** button ( OK ) to access the menu.
3. Press scroll button ( ◀ or ▶ ) until 'Reset Defaults' displays on the bottom line.
4. Press the **OK** button ( OK ) to confirm the selection.

# D Installing An Optional Tray 2

Your printer is a full-featured laser printer that has been optimized to meet most of your printing needs. Recognizing that each user may have different requirements, however, Xerox makes several options available to enhance your printer's capabilities.

This chapter includes information for installing an Optional Tray 2.

# Installing an Optional Tray 2

You can increase the paper handling capacity of your printer by installing an optional Tray2. This tray holds 500 sheets of paper.

1 Turn the printer off and unplug all cables from the printer.

2 Remove the packing tape and the packing material inside of the tray.

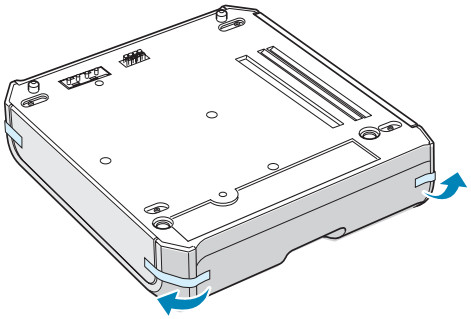

3 Find the location of the connector and the optional tray positioners.

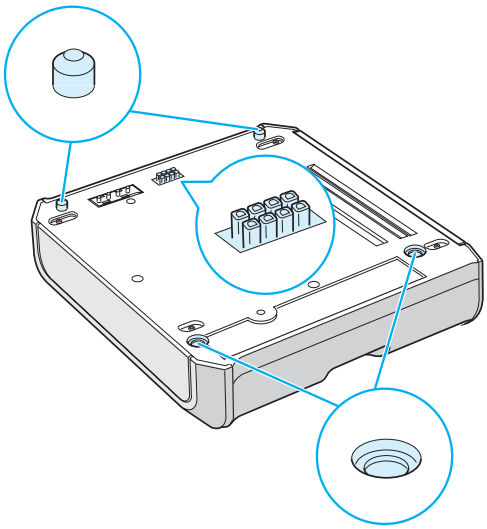

4 Place the printer over the tray, aligning the feet on the printer with the positioners in the optional tray.

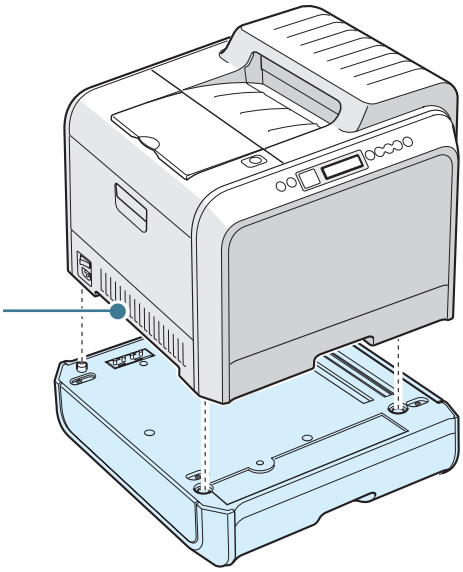


**CAUTION**: This printer weighs 35kg including developer cartridge and cassette. Use safe lifting and handling techniques. If you need to move the printer it must be moved by two people. Use the lifting handles located as shown in the diagram. Back injury could be caused if a single person attempts to lift the printer.

5 Load paper in the optional tray. For information about loading paper in this tray, see "Using the Optional Tray 2" on page 2.8.

6 Reconnect the power cord and cables and then turn the printer on.

**CAUTION**: When moving the printer with the Optional Tray 2, lift using the handles on each side of the Optional Tray 2 to prevent the tray from separating from the printer. The illustration below demonstrates the proper technique for lifting the printer.

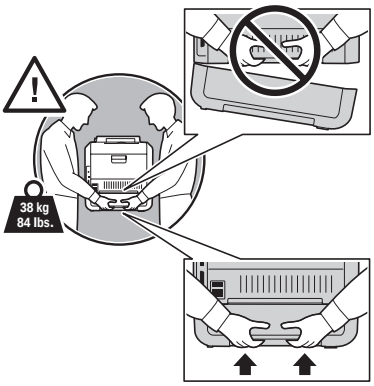

When you print a document on the paper loaded in Tray 2, you must configure the properties of the printer driver.

To access the properties of the printer driver:

1 Click the Windows **Start** menu.

2 For Windows 98/Me/NT 4.0/2000, select **Settings** and then **Printers**.
For Windows XP/Server 2003, select **Printers and Faxes**.

3 Select the **Xerox Phaser 6100** printer.

4 Click the right mouse button on the printer icon and:

In Windows 98/Me, select **Properties**.

In Windows NT 4.0/2000/XP/Server 2003, select **Properties**.

5 Click the **Printer** tab, and select **Tray 2** from the **Optional Tray** drop-down list.

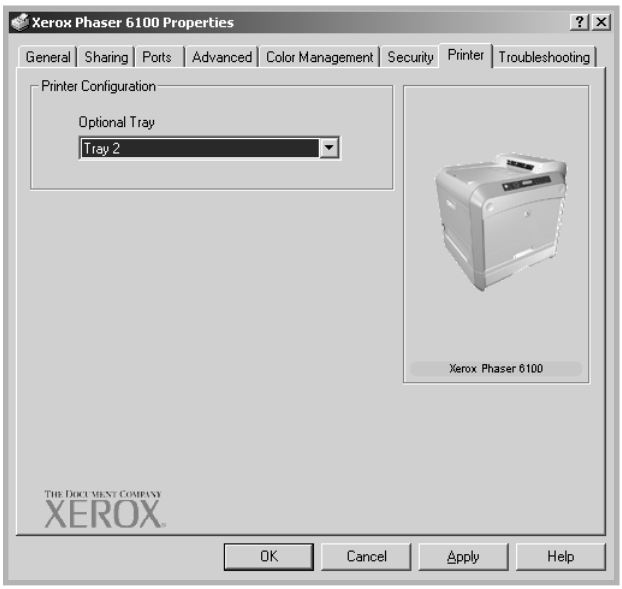


6 Click **OK**.

# E SPECIFICATIONS

This chapter includes:

- **Printer Specifications**
- **Paper Specifications**

# Printer Specifications

| Item | Specifications and Description |
|---|---|
| Print Speed | Black:20 PPM (A4), 21 PPM (Letter);Color: 5 PPM (A4/Letter)<br>Duplex: 9.6 IPM (Black); 5 IPM (Color) |
| Resolution | True 600x600 dpi (1200x1200 dpi class) |
| Warm-up Time | 15 seconds (Black); 24 seconds (4-Color) |
| First Page Out Time | < 120 seconds |
| Power Rating | AC 110 ~ 127V (USA, Canada) / 220 ~ 240V (Others),<br>50 / 60Hz |
| Power consumption | 450 W average during operation /<br>Less than 30 W in Power Saver mode |
| Acoustic Noise | Printing: 48dB |
| Toner Supply | Four toner cartridges (Black, Yellow, Magenta, Cyan) |
| Toner cartridge Life | 7,000 Sheets high-capacity (for standard-capacity 3,000 sheets) @ IDC 5% coverage (Black Toner)<br><br>5,000 Sheets high-capacity (for standard-capacity, 2,000 sheets) @ IDC 5% coverage (C/M/Y) |
| Duty Cycle | Monthly: 35,000 pages maximum (Black) |
| Weight | 38kg/84lb (including consumables) |
| Package Weight | Paper: 4.36Kg, Plastic: 1.48Kg |
| External Dimensions (W x D x H) | 510 (W) x 470 (D) x 405 (H) mm |
| Operating Environment | Temperature: 15 ~ 32.5°C / 50 ~ 90°F<br>Humidity: 20 ~ 80% RH |
| Emulation | SPL-Color |
| Random Access Memory (RAM) | Standard 64 MB |
| Fonts | Windows font |
| Interface Switching | Automatic (Parallel, USB, Network) |
| Interface | • IEEE 1284 Bidirectional Parallel<br>- Modes supported: Compatible, Nibble, Byte, ECP<br>• USB Interface Standard<br>- USB 1.1/2.0 compliant (12/480 Mbps 1 port)<br>• Network Interface<br>- 10/100 Base TX (Phaser 6100DN only) |

# Paper Specifications

## Overview

Your printer is designed to be used with a variety of paper types including envelopes, labels, transparencies, and custom size paper. Paper weight and size affect both print quality and the printer's performance. Using unsupported paper or specialty media can cause:

- Poor print quality
- Increased paper jams
- Premature wear on the printer.

See "Supported Sizes of Paper" on page E.4.

**NOTES**:

- When the correct paper or specialty media is used and print problems still occur, other factors may be involved. Paper may have been stored incorrectly or has become wrinkled, dusty, too moist, or too dry. Xerox has no control over, or responsibility for, these occurrences.
- Before purchasing large quantities of paper, ensure that the paper meets the requirements specified in this User Guide.

**CAUTION**: Damage caused by using unsupported paper, transparencies, and other specialty media is not covered by the Xerox warranty or service agreement.

## Supported Sizes of Paper

| Tray1 / Tray2 | Dimensions* | Weight | Capacity** |
|---|---|---|---|
| Letter | 216 X 279mm (8.5 X 11in.) | • 16 to 24lb (60 to 90g/m$^2$) bond for single-sided printing<br>• 20 to 24lb (75 to 90 g/m$^2$) bond for duplex printing | • 250 sheets of 75g/m$^2$ bond paper for Tray 1<br>• 500 sheets of 75g/m$^2$ bond paper for Tray 2 |
| A4 | 210 X 297mm (8.3 X 11.7in.) | | |

| Multi-Purpose Tray | Dimensions* | Weight | Capacity** |
|---|---|---|---|
| Minimum Size (custom) | 90 X 140mm (3.5 X 5.5in.) | 16 to 32lb (60 to 160g/m$^2$) bond, up to 60 lb cover | 100 sheets of 75g/m$^2$ bond paper |
| Maximum Size (custom) | 216 X 356mm (8.5 X 14in.) | | |
| Transparency | Same minimum and maximum paper sizes as listed above. | Use only Phaser 35-Series Premium Transparency Film. | 30 typical |
| Labels*** | | Thickness: 0.10 X 0.14 mm (0.0039 X 0.0055in.) | 10 typical |
| Envelopes | | up to 90g/m$^2$ (16 to 24lb) | up to 10 |

**The printer supports a wide range of media sizes. See "Printing on Card Stock or Custom Size Paper" on page 2.21.*
***Capacity may vary depending on media weight and thickness, and environmental conditions.*
****Smoothness: 100 to 250 (Sheffield)*

**NOTE**: You may experience jams when using paper with a length of less than 140mm (5.5in.). For optimum performance, ensure that you are storing and handling the paper correctly. Please refer to "Printer and Paper Storage Environment" on page E.7.

## Guidelines for Using Paper

Use conventional 75g/m$^2$ (20lb) paper. For best results, use Xerox Phaser Color Printing Media specified for your printer. They are guaranteed to produce excellent results with your Phaser 6100 Color Laser Printer.

Follow the guidelines in this table to ensure the best print quality and avoid printer jams.

| Symptom | Problem | Solution |
|---|---|---|
| Poor print quality, paper does not feed into the printer | Paper weight, texture, or moisture content may be unsupported by the printer. | Try using a different kind of paper, between 100 ~ 250 Sheffield, 4 ~ 5% moisture content. |
| Text Dropout, paper jams, paper curl | Paper may have been improperly stored. | Store paper flat in its moisture-proof wrapping. |
| Increased gray background shading | Paper weight is too heavy for the print job. | Use lighter weight paper. Open the rear output tray. |
| Paper curls when fed into printer | Paper is too moist or contains a wrong grain direction or short-grain construction | Use long-grain paper. |
| Printer jams, printer is damaged | Paper contains cutouts or perforations | Do not use paper with cutouts or perforations. |
| Paper does not feed into printer properly | Ragged edges | Use good quality paper. |

**NOTES**:

- Do not use letterhead paper printed with low-temperature inks used in some types of thermography.
- Do not use raised or embossed letterhead.
- Make sure that colored paper or preprinted forms use inks that are compatible with a fusing temperature of 180°C or 356°F for 0.1 second.

## Paper Specifications

| Category | Specifications |
|---|---|
| Acid Content | 5.5 ~ 8.0pH |
| Caliper | 0.094 ~ 0.18mm (3.0 ~ 7.0mils) |
| Curl in Ream | Flat within 5mm (0.02in.) |
| Cut Edge Conditions | Cut with sharp blades with no visible fray. |
| Fusing Compatibility | Must not scorch, melt, offset, or release hazardous emissions when heated to 180°C (356°F) for 0.1 second. |
| Grain | Long Grain |
| Moisture Content | 4% ~ 6% by weight |
| Smoothness | 100 ~ 250 Sheffield |

## Paper Output Capacity

| Output Tray | Capacity |
|---|---|
| Face-down | 250 sheets of 75g/m$^2$ bond paper |

## Paper Input Capacity

| Input Tray | Capacity |
|---|---|
| Tray 1 | 250 sheets of 75g/m$^2$, 20lb bond paper |
| Multi-purpose Tray (MPT) | 100 sheets of 75g/m$^2$, 20lb bond paper |
| Optional Tray 2 | 500 sheets of 75g/m$^2$, 20lb bond paper |

## Printer and Paper Storage Environment

Optimal print quality is achieved by providing a good environment and safe handling and storage conditions for your paper.

- Store the printer and paper in room-temperature environment that is neither too dry nor too humid. Paper absorbs or loses moisture rapidly. Heat removes moisture in paper while cold condenses moisture on the sheets. The humidity, or lack of it, in air conditioned, heated, or water-cooled rooms affects paper quality.
- Paper removed from its packaging, and not protected by tightly wrapping it in moisture-proof wrapping, can absorb excess moisture. This can cause light print, dropouts, paper distortion, and paper jams. Unopened paper in sealed reams remains stable for several months before use.

**NOTE**: If the printer environment is subject to extremes, unwrap only the amount of paper to be used during the day's operation to prevent paper damage.

- Do not purchase large quantities of paper that cannot be used in a short period of time–approximately three months. When stored too long, paper can be damaged by temperature and moisture.
- The paper storage environment should be properly maintained to ensure optimum printer performance. The required condition is 20° to 24°C (68° to 75°F), with a relative humidity of 45% to 55%.

## Envelopes

Successful envelope printing is highly dependent on the quality and construction of the envelopes. Use envelopes made specifically for laser printers. When selecting envelopes, consider the following guidelines:

- Weight: 90g/$m^2$ (24lb) or less
- Construction: Flat with less than 6mm (0.25in.) curl
- Condition: No wrinkles or damaged surface or edges
- Temperature: Compatible with the heat and pressure of the printer
- Size: Meet the following size ranges:

| | Minimum | Maximum |
|---|---|---|
| Multi-purpose Tray | 90 X 140mm (3.5 X 5.5in.) | 216 X 356mm (8.5 X 14in.) |

**NOTES**:

- Use only the Multi-purpose Tray to print envelopes.
- You may experience some paper jams when using any media with a length less than 140mm(5.5in.). This may be caused by paper that has been affected by environmental conditions. For optimum performance, make sure you are storing and handling the paper correctly. Please refer to "Printer and Paper Storage Environment" on page E.7.

## Envelopes with Double Side Seams

Envelopes designed with double side-seams (vertical seams at both ends of the envelope) may wrinkle easily. Select only those envelopes with a seam that extends to the corner of the envelope. See the following illustration.

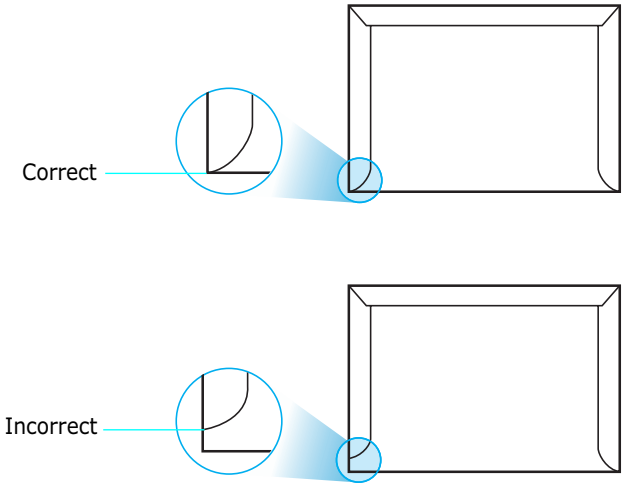


## Envelopes with Adhesive Strips or Flaps

These types of envelopes are not recommended.

## Envelope Margins

The following gives typical address margins for a commercial #10 or DL envelope.

| Type of Address | Minimum | Maximum |
|---|---|---|
| Return address | 10mm (0.4in.) | 51mm (2in.) |
| Delivery address | 51mm (2in.) | 90mm (3.5in.) |

**NOTES**:

- For best print quality, position margins no closer than 15mm (0.6in.) from the edges of the envelope.
- Avoid printing over the area where the envelope's seams meet.

### Envelope Storage

Store envelopes properly to ensure print quality. Envelopes should be stored flat. Remove air bubbles from envelopes before printing to avoid wrinkling or paper jams. See “Printing on Envelopes” on page 2.14.

## Labels

**CAUTIONS**:

- To avoid damaging the printer, use only labels recommended for laser printers.
- To prevent serious jams, always use the Multi-purpose Tray to print labels.
- Never print on the same sheet of labels more than once and never print on a partial sheet of labels.

When selecting labels, consider the quality of each component:

- Adhesives: The adhesive material should be stable at 180°C (356°F), the printer’s fusing temperature.
- Arrangement: Only use labels with no exposed backing between them. Labels can peel off sheets with spaces between the labels, causing serious jams. Exposed adhesive can also cause damage to the printer components.
- Curl: Prior to printing, labels must lie flat with no more than 13mm (0.5in.) of curl in any direction.
- Condition: Do not use labels with wrinkles, bubbles, or other indications of separation.

See “Printing on Labels” on page 2.16.

## Transparencies

Transparencies used in the printer must be able to withstand 180°C (356°F) for 0.1 second, the printer’s fusing temperature.

**CAUTION**: To avoid damaging the printer, use only transparencies recommended for laser printers using oil-less fusers. Do not use transparencies with paper backing or paper tape. Phaser 35-Series Premium Transparency Film is recommended.

See “Printing on Transparencies” on page 2.17.

# F Product Recycling and Disposal

This chapter includes information on the Xerox product recycling and disposal program.

# Product Recycling and Disposal

Xerox operates a worldwide equipment takeback and reuse/recycle program. Contact your Xerox sales representative (1-800-ASK-XEROX) to determine whether this Xerox product is part of the program. For more information about Xerox environmental programs, visit www.xerox.com/environment.html.

If your product is not part of the Xerox program and you are managing its disposal, please note that the product may contain lead and other materials whose disposal may be regulated due to environmental considerations. For recycling and disposal information, contact your local authorities. In the United States, you may also refer to the Electronic Industries Alliance at www.eiae.org.

# G Additional Resources

This chapter includes web site information to help you learn more about your Phaser 6100 Color Laser Printer.

# Web Links

Xerox provides many resources to help you learn more about your Xerox printer. Use these web sites to obtain information about your printer:

| Resource | Link |
|---|---|
| To link to product and supplies information, download printer drivers, view documents, and access support information: | www.xerox.com/office |
| To access the troubleshooting knowledge base used by Xerox Customer Support staff: | www.xerox.com/office/6100infoSMART |
| To link to a color resource for tools and information such as interactive tutorials, color printing templates, helpful tips, and customized features to meet your individual needs: | www.colorconnection.xerox.com |
| To view technical support information: | www.xerox.com/office/6100support |
| To order Xerox supplies: | www.xerox.com/office/6100supplies |
| To find your local sales and support center: | www.xerox.com/office/contacts |
| To view warranty information regarding your Xerox printer: | www.xerox.com/office/6100warranty |
| To view Material Safety Data Sheet information regarding your Phaser 6100 Color Laser Printer: | www.xerox.com/office/msds |

# INDEX


## B

binding preferences 5.8
booklet printing 4.9

## C

cancel, print jobs 3.4
card stock, print 2.21
clean
    inside the printer 6.31
    Laser Scanning Unit (LSU) 6.30
    outside of the printer 6.29
cleaning sheet, print 6.29
color mode 3.9, 3.10
components 1.4
config page, print 6.2
connect
    network 1.5
    parallel 1.5
    USB 1.5
control panel 5.2
    buttons 5.3
    display 5.2
    menus 5.5
Custom Size paper, print 2.21

## D

display language, change 1.6
double-sided printing 4.2

## E

envelopes, print 2.14
error messages 7.25

## F

Favorite setting, use 3.12
features
    printer 1.2

## G

getting help
    infoSMART G.2
    technical support G.2
graphic properties, set 3.9

## H

help, use 3.13

## I

imaging unit, replace 6.14
install
    optional Tray2 D.2
    SPL driver for Linux B.2

## L

labels, print 2.16
Laser Scanning Unit (LSU) 6.30
Linux
    common problems 7.31
    configuration tool B.8
    driver, install B.2
    LLPR properties B.10
load, paper
    in the Multi-Purpose Tray 2.9
    in the optional Tray2 2.8
    in the Tray1 2.4
    using the manual feed 2.12

## M

Macintosh
    common problems 7.30
    drive A.2
manual feed mode, use 2.12
Multi-Purpose Tray, use 2.9

## N

network printing
    locally shared printer, set C.3
    network-connected printer, set C.6
    parameters, configure C.7
n-up printing 4.6

## O

option, install
    paper tray 2 D.2
optional tray, install D.2
ordering supplies G.2
orientation, select 3.6
overlay, use 4.13

## P

paper
    choose 2.2
    guideline 2.3
    load 2.4
    sizes and capacities 2.2
    specifications E.3
paper jam
    jam at B, C 7.14
    jam at C 7.9, 7.10
    jam at Optional Tray 2 7.17
    jam at the Multi-purpose Tray (MPT) 7.9
    jam at Tray 1 or the Paper Feed Area 7.7
    tips for avoiding 7.20
paper properties, set 3.7
paper size, change in the tray 2.7
paper size, set 3.7
poster printing 4.7
power saver mode 5.2
preprinted paper, print 2.20
print order, set 3.11
print quality problems 7.21
print quality, set 3.9
printer driver
    features 3.2
printer software
    install
        in Linux B.2
    uninstall
        in Linux B.7
printing
    booklets 4.9
    config page 6.2
    double-sided 4.2
    fitting to a selected paper 4.5
    from Windows 3.3
    multiple pages on one sheet 4.6
    posters 4.7
    reduced/enlarged document 4.4
    using overlays 4.13
    watermarks 4.10
printing problems 7.3
problem, solving
    checklist 7.2
    error messages 7.25
    general 7.3
    Linux 7.31
    Macintosh 7.30
    paper jams 7.6
    print quality 7.21
    Windows 7.29

## Q

quality problems, solve 7.21

## R

replace
    imaging unit 6.14
    toner cartridge 6.8
    transfer belt 6.22
    waste cartridge 6.11

## S

safety 7
scaling 4.4
specification
    paper E.3
    printer E.2, G.2
system requirements
    for Linux B.2
    Windows C.2

## T

toner cartridge
    maintain 6.4
    redistribute 6.5, 6.8
    replace 6.8
    toner remain, check 6.4
transfer belt, replace 6.22
transparencies, print 2.17
tray selection, set 3.8
Tray1, use 2.4
troubleshooting
    infoSMART G.2
    technical support G.2

## U

uninstall
    Linux B.7
user safety 7

## W

warranty G.2
waste cartridge, replace 6.11
watermarks, use 4.10
website
    resources G.2

## X

Xerox warranty G.2