Samsung SCX-6x45 Series

Monochrome Laser Multifunction

User's Guide

SAMSUNG

© 2006 Samsung Electronics Co., Ltd. All rights reserved.

This manual is provided for information purposes only. All information included herein is subject to change without notice. Samsung Electronics is not responsible for any direct or indirect damages, arising from or related to use of this manual.

- SCX-6345N and SCX-6355N are model names of Samsung Electronics Co., Ltd.
- Samsung and Samsung logo are trademarks of Samsung Electronics Co., Ltd.
- Centronics is a trademark of Centronics Data Computer Corporation.
- PCL and PCL 6 are trademarks of Hewlett-Packard company.
- Microsoft, Windows, Windows 98, Windows Me, Windows 2000, Windows NT 4.0, Windows XP, and Windows 2003 are registered trademarks of Microsoft Corporation.
- PostScript 3 is a trademark of Adobe System, Inc.
- UFST® and MicroType™ are registered trademarks of Monotype Imaging Inc.
- TrueType, LaserWriter and Macintosh are trademarks of Apple Computer, Inc.
- All other brand or product names are trademarks of their respective companies or organizations.

CONTACT SAMSUNG WORLD WIDE

If you have any comments or questions regarding Samsung products, contact the Samsung customer care center.

Country	Customer Care Center	Web Site
ARGENTINE	0800-333-3733	www.samsung.com/ar
AUSTRALIA	1300 362 603	www.samsung.com/au
BELGIUM	02 201 2418	www.samsung.com/be
BRAZIL	0800-124-421	www.samsung.com/br
CANADA	1-800-SAMSUNG (7267864)	www.samsung.com/ca
CHILE	800-726-7864 (SAMSUNG)	www.samsung.com/cl
CHINA	800-810-5858 010- 6475 1880	www.samsung.com.cn
COSTA RICA	0-800-507-7267	www.samsung.com/latin
CZECH REPUBLIC	844 000 844	www.samsung.com/cz
DENMARK	38 322 887	www.samsung.com/dk
ECUADOR	1-800-10-7267	www.samsung.com/latin
EL SALVADOR	800-6225	www.samsung.com/latin
FINLAND	09 693 79 554	www.samsung.com/fi
FRANCE	08 25 08 65 65 (0,15/min)	www.samsung.com/fr
GERMANY	01805 - 121213 (0,12/min)	www.samsung.de
GUATEMALA	1-800-299-0013	www.samsung.com/latin
HONG KONG	2862 6001	www.samsung.com/hk
HUNGARY	06 40 985 985	www.samsung.com/hu
INDIA	3030 8282 1600 1100 11	www.samsung.com/in
INDONESIA	0800-112-8888	www.samsung.com/id
ITALIA	199 153 153	www.samsung.com/it
JAMAICA	1-800-234-7267	www.samsung.com/latin
JAPAN	0120-327-527	www.samsung.com/jp
LUXEMBURG	02 261 03 710	www.samsung.lu

Country	Customer Care Center	Web Site
MALAYSIA	1800-88-9999	www.samsung.com/my
MEXICO	01-800-SAMSUNG (7267864)	www.samsung.com/mx
NETHERLANDS	0900 20 200 88 (0,10/min)	www.samsung.com/nl
NORWAY	231 627 22	www.samsung.com/no
PANAMA	800-7267	www.samsung.com/latin
PHILIPPINES	1800-10-SAMSUNG (7267864)	www.samsung.com/ph
POLAND	0 801 801 881	www.samsung.com/pl
PORTUGAL	80 8 200 128	www.samsung.com/pt
PUERTO RICO	1-800-682-3180	www.samsung.com/latin
REP. DOMINICA	1-800-751-2676	www.samsung.com/latin
RUSSIA	8-800-200-0400	www.samsung.ru
SINGAPORE	1800-SAMSUNG (7267864)	www.samsung.com/sg
SLOVAKIA	0850 123 989	www.samsung.com/sk
SOUTH AFRICA	0860 7267864 (SAMSUNG)	www.samsung.com/za
SPAIN	902 10 11 30	www.samsung.com/es
SWEDEN	08 585 367 87	www.samsung.com/se
TAIWAN	0800-329-999	www.samsung.com/tw
THAILAND	1800-29-3232 02-689-3232	www.samsung.com/th
TRINIDAD & TOBAGO	1-800-7267-864	www.samsung.com/latin
U.A.E	800SAMSUNG (7267864)	www.samsung.com/mea
U.K	0870 242 0303	www.samsung.com/uk
U.S.A	1-800-SAMSUNG (7267864)	www.samsung.com
UKRAINE	8-800-502-0000	www.samsung.com/ur
VENEZUELA	1-800-100-5303	www.samsung.com/latin
VIETNAM	1 800 588 889	www.samsung.com/vn

CONTENTS

About this user's guide 1.1
Finding more information 1.1

1. Introduction

Special features 1.1
Machine overview 1.2
Control panel overview 1.3

2. Getting Started

Setting up the hardware 2.1
Setting up the software 2.1
Setting up the network 2.2
Machine's basic settings 2.3
Understanding keyboard 2.5

3. Loading originals and print media

Loading originals 3.1
Selecting print media 3.2
Loading paper 3.5
Setting the paper size and type 3.8

4. Copying

Understanding the Copy screen 4.1
Copying originals 4.2
Changing the settings for each copy 4.2
Using special copy features 4.4
Setting copy timeout 4.7
Changing the default settings for copy job 4.7

5. Faxing (Optional)

Preparing for faxing 5.1
Understanding the Fax screen 5.1
Sending a fax 5.2
Receiving a fax 5.4
Adjusting the document settings 5.5
Setting up a fax phonebook 5.6
Using the polling 5.7
Using the mail box 5.8

6. Scanning

Preparing for Scan to E-mail 6.1
Understanding the Scan to E-mail LCD 6.2
Scanning basics 6.3
Scanning to an application using a local connection 6.3
Scanning using a network connection 6.3
Changing the settings for each scan job 6.6
Changing the default scan settings 6.7
Setting up Address Book 6.7

Scan on both sides of paper 6.9

7. Basic printing

Printing a document 7.1
Canceling a print job 7.1

8. Machine status and advanced setup

Starting Machine Setup 8.1
Machine Status screen 8.1
Admin Setting screen 8.1
General Settings 8.2
Fax Setup 8.3
Network Setup 8.4
Login Setup 8.4
Optional Service 8.5
Print/Report 8.5

9. Maintenance

Printing reports 9.1
Cleaning your machine 9.2
Maintaining the toner cartridge 9.3
Maintenance Parts 9.8
Managing your machine from the website 9.8
Checking the machine's serial number 9.8
System Administrtion Tools 9.8

10. Troubleshooting

Clearing document jams 10.1
Clearing paper jams 10.2
Understanding display messages 10.8
Solving other problems 10.13

11. Ordering supplies and accessories

Toner cartridge 11.1
Drum cartridge 11.1
Accessories 11.1
How to purchase 11.1

12. Installing accessories

Precautions when installing accessories 12.1
Installing a memory DIMM 12.1

13. Specifications

General specifications 13.1
Printer specifications 13.1
Copier specifications 13.2
Scanner specifications 13.2
Facsimile specifications (optional) 13.3

Index

About this user's guide

This user's guide provides the information about basic understanding of the machine as well as detailed explanation on each step during the actual usage. Both of the new user and professional user can refer to this guide for installing and using the machine.

The explanation herein is mainly basd on windows operating system.

Some terms in this guide are used interchangeably, as below.

- Document is synonymous with original.
- Paper is synonymous with media, or print media.
- SCX-6345N is synonymous with the machine.

Following table offers the conventions of this guide.

Convention	Description	Example
Bold	Used to texts on the screen or actual prints on the machine.	**Copy Setup**
Note	Used to provide additional information or detailed specification of the machine function and feature.	**Note** The date format may differ from country to country.
Caution	Used to give users to protect the machine from the possible mechanical damage or malfunction.	**Caution** Do not touch the green underside of the toner cartridge. Use the handle on the cartridge to avoid touching this area.
Footnote	Used to provide more detail information on certain word or a phrase.	a. pages per minute
>	Used to show the steps of selecting or pressing items in order. The example menus; press **Copy** from the main screen, press **Adminced** tab, and then press **Clone Copy**.	**Copy** menu > **Adminced** tab > **Clone Copy**
page 1.1	Used to guide users to the reference page for the additional detailed information.	(page 1.1)

Finding more information

You can find information for setting up and using your machine from the following resources, either printed or onscreen.

Quick Install Guide	Provides information on setting up your machine and, therefore, be sure to follow the instructions in the guide to get the machine ready.
Online User's Guide	Provides you with step-by-step instructions for using your machine's full features, and contains information for maintaining your machine, troubleshooting, and installing accessories. This user's guide also contains the **Software Section** providing you with information on how to print documents with your machine on various operating systems, and how to use the supplied software utilities. **Note** You can access the user's guides in other languages from the **Manual** folder on the **printer software CD**.
Network Printer User's Guide	Contained on the **network utilities CD**, provides you with information on setting up and connecting your machine to a network.
Printer Driver Help	Provides you with help information on printer driver properties and instructions for setting up the properties for printing. To access a printer driver help screen, click **Help** from the printer properties dialog box.
Samsung website	If you have Internet access, you can get help, support, printer drivers, manuals, and order information from the Samsung website, www.samsungprinter.com.

Important Precautions and Safety Information

When using this machine, these basic safety precautions should always be followed to reduce risk of fire, electric shock and injury to people:

1 Read and understand all instructions.

2 Use common sense whenever operating electrical appliances.

3 Follow all warnings and instructions marked on the machine and in the literature accompanying the machine.

4 If an operating instruction appears to conflict with safety information, heed the safety information. You may have misunderstood the operating instruction. If you cannot resolve the conflict, contact your sales or service representative for assistance.

5 Unplug the machine from the AC wall socket and/or telephone jack before cleaning. Do not use liquid or aerosol cleaners. Use only a damp cloth for cleaning.

6 Do not place the machine on an unstable cart, stand or table. It may fall, causing serious damage.

7 Your machine should never be placed on, near or over a radiator, heater, air conditioner or ventilation duct.

8 Do not allow anything to rest on the power. Do not locate your machine where the cords will be abused by persons walking on them.

9 Do not overload wall outlets and extension cords. This can diminish performance, and may result in the risk of fire or electric shock.

10 Do not allow pets to chew on the AC power, telephone or PC interface cords.

11 Never push objects of any kind into the machine through case or cabinet openings. They may touch dangerous voltage points, creating a risk of fire or shock. Never spill liquid of any kind onto or into the machine.

12 Your machine may have a heavy cover for optimal pressure on the document for the best scanning and/or faxing (usually the flatbed-type machine). In this case, replace the cover after placing document on the scan glass, by holding and moving it down slowly until it seats on its location.

13 To reduce the risk of electric shock, do not disassemble the machine. Take it to a qualified service technician when repair work is required. Opening or removing covers may expose you to dangerous voltages or other risks. Incorrect reassembly could cause electric shock when the unit is subsequently used.

14 Unplug the machine from the telephone jack, PC and AC wall outlet and refer servicing to qualified service personnel under the following conditions:
- When any part of the power cord, plug or connecting cable is damaged or frayed.
- If liquid has been spilled into the machine.
- If the machine has been exposed to rain or water.
- If the machine does not operate properly after instructions have been followed.
- If the machine has been dropped, or the cabinet appears damaged.
- If the machine exhibits a sudden and distinct change in performance.

15 Adjust only those controls covered by the operating instructions. Improper adjustment of other controls may result in damage, and may require extensive work by a qualified service technician to restore the machine to normal operation.

16 Avoid using this machine during a lightning storm. There may be a remote risk of electric shock from lightning. If possible, unplug the AC power and telephone cord for the duration of the lightning storm.

17 The Power cord supplied with your machine should be used for safe operation. If you are using a cord which is longer than 2 m with 110 V machine, then it should be 16 AWG[1] or bigger.

18 Use only No.26 AWG[1] or larger telephone line cord.

19 SAVE THESE INSTRUCTIONS.

Laser Safety Statement

The printer is certified in the U.S. to conform to the requirements of DHHS 21 CFR, chapter 1 Subchapter J for Class I(1) laser products, and elsewhere is certified as a Class I laser product conforming to the requirements of IEC 825.

Class I laser products are not considered to be hazardous. The laser system and printer are designed so there is never any human access to laser radiation above a Class I level during normal operation, user maintenance or prescribed service condition.

WARNING

Never operate or service the printer with the protective cover removed from Laser/ Scanner assembly. The reflected beam, although invisible, can damage your eyes.

When using this product, these basic safety precautions should always be followed to reduce risk of fire, electric shock, and injury to persons:

CAUTION - CLASS 3B LASER RADIATION WHEN OPEN AVOID EXPOSURE TO THE BEAM.
DANGER - LASER RADIATION AVOID DIRECT EXPOSURE TO BEAM.
DANGER - RADIATIONS INVISIBLES DU LASER EN CAS D'OUVERTURE. EVITER TOUTE EXPOSITION DIRECTE AU FAISCEAU.
VORSICHT - UNSICHTBARE LASERSTRAHLUNG, WENN ABDECKUNG GEÖFFNET. NICHT DEM STRAHL AUSSETZEN.
ATTENZIONE - RADIAZIONE LASER INVISIBILE IN CASO DI APERTURA. EVITARE L'ESPOSIZIONE AL FASCIO.
PRECAUCIÓN - RADIACIÓN LASER INVISIBLE CUANDO SE ABRE. EVITAR EXPONERSE AL RAYO.
PERIGO - RADIAÇÃO LASER INVISÍVEL AO ABRIR. EVITE EXPOSIÇÃO DIRECTA AO FEIXE.
GEVAAR - ONZICHTBARE LASERSTRALEN BIJ GEOPENDE KLEP. DEZE KLEP NIET OPENEN.
ADVARSEL - USYNLIG LASERSTRÅLNING VED ÅBNING. UNDGÅ UDSAETTELSE FOR STRÅLNING.
ADVARSEL. - USYNLIG LASERSTRÅLNING NÅR DEKSEL ÅPNES. UNNGÅ EKSPONERING FOR STRÅLEN.
VARNING - OSYNLIG LASERSTRÅLNING NÄR DENNA DEL ÄR ÖPPEN. STRÅLEN ÄR FARLIG.
VAROITUS - NÄKYMÄTÖNTÄ LASERSÄTEILYÄ AVATTAESSA. VARO SUORAA ALTISTUMISTA SÄTEELLE.
注 意 - 严禁揭开此盖, 以免激光泄露灼伤
주 의 - 이 덮개를 열면 레이저광에 노출될 수 있으므로 주의하십시오.

Ozone Safety

During normal operation, this machine produces ozone. The ozone produced does not present a hazard to the operator. However, it is advisable that the machine be operated in a well ventilated area.

If you need additional information about ozone, please request your nearest Samsung dealer.

---

1 AWG: American Wire Gauge

Mercury Safety

LAMP(S) INSIDE THIS PRODUCT CONTAIN MERCURY AND MUST BE RECYCLED OR DISPOSED OF ACCORDING TO LOCAL, STATE OR FEDERAL LAWS. For details see lamprecycle.org, eiae.org, or call 1-800-Samsung

Power Saver

This printer contains advanced energy conservation technology that reduces power consumption when it is not in active use.

When the printer does not receive data for an extended period of time, power consumption is automatically lowered.

Recycling

Please recycle or dispose of the packaging material for this product in an environmentally responsible manner.

Correct Disposal of This Product (Waste Electrical & Electronic Equipment)

(Applicable in the European Union and other European countries with separate collection systems)

This marking shown on the product or its literature, indicates that it should not be disposed with other household wastes at the end of its working life. To prevent possible harm to the environment or human health from uncontrolled waste disposal, please separate this from other types of wastes and recycle it responsibly to promote the sustainable reuse of material resources.

Household users should contact either the retailer where they purchased this product, or their local government office, for details of where and how they can take this item for environmentally safe recycling.

Business users should contact their supplier and check the terms and conditions of the purchase contract. This product should not be mixed with other commercial wastes for disposal.

Radio Frequency Emissions

FCC Information to the User

This device complies with Part 15 of the FCC Rules. Operation is subject to the following two conditions:

- This device may not cause harmful interference, and
- This device must accept any interference received, including interference that may cause undesired operation.

This equipment has been tested and found to comply with the limits for a Class A digital device, pursuant to Part 15 of the FCC Rules. These limits are designed to provide reasonable protection against harmful interference in a residential installation. This equipment generates, uses and can radiate radio frequency energy and, if not installed and used in accordance with the instructions, may cause harmful interference to radio communications. However, there is no guarantee that interference will not occur in a particular installation. If this equipment does cause harmful interference to radio or television reception, which can be determined by turning the equipment off and on, the user is encouraged to try to correct the interference by one or more of the following measures:

- Reorient or relocate the receiving antenna.
- Increase the separation between the equipment and receiver.
- Connect the equipment into an outlet on a circuit different from that to which the receiver is connected.
- Consult the dealer or experienced radio TV technician for help.

CAUTION: Change or modifications not expressly approved by the manufacturer responsible for compliance could void the user's authority to operate the equipment.

Canadian Radio Interference Regulations

This digital apparatus does not exceed the Class A limits for radio noise emissions from digital apparatus as set out in the interference-causing equipment standard entitled “Digital Apparatus”, ICES-003 of the Industry and Science Canada.

Cet appareil numérique respecte les limites de bruits radioélectriques applicables aux appareils numériques de Classe B prescrites dans la norme sur le matériel brouilleur: “Appareils Numériques”, ICES-003 édictée par l’Industrie et Sciences Canada.

Fax Branding

The Telephone Consumer Protection Act of 1991 makes it unlawful for any person to use a computer or other electronic device to send any message via a telephone facsimile machine unless such message clearly contains in a margin at the top or bottom of each transmitted page or on the first page of the transmission the following information:

(1) the date and time of transmission

(2) identification of either business, business entity or individual sending the message; and

(3) telephone number of either the sending machine, business, business entity or individual.

The Telephone Company may make changes in its communications facilities, equipment operations or procedures where such action is reasonably required in the operation of its business and is not inconsistent with the rules and regulations in FCC Part 68. If such changes can be reasonably expected to render any customer terminal equipment incompatible with telephone company communications facilities, or require modification or alteration of such terminal equipment, or otherwise materially affect its use or performance, the customer shall be given adequate notice in writing, to allow the customer an opportunity to maintain uninterrupted service.

Ringer Equivalence Number

The Ringer Equivalence Number and FCC Registration Number for this machine may be found on the label located on the bottom or rear of the machine. In some instances you may need to provide these numbers to the telephone company.

The Ringer Equivalence Number (REN) is a measure of the electrical load placed on the telephone line, and is useful for determining whether you have “overloaded” the line. Installing several types of equipment on the same telephone line may result in problems making and receiving telephone calls, especially ringing when your line is called. The sum of all Ringer Equivalence Numbers of the equipment on your telephone line should be less than five in order to assure proper service from the telephone company. In some cases, a sum of five may not be usable on your line. If any of your telephone equipment is not operating properly, you should immediately remove it from your telephone line, as it may cause harm to the telephone network.

WARNING:

FCC Regulations state that changes or modifications to this equipment not expressly approved by the manufacturer could void the user's authority to operate this equipment. In the event that terminal equipment causes harm to the telephone network, the telephone company should notify the customer that service may be stopped. However, where prior notice is impractical, the company may temporarily cease service, providing that they:

a) promptly notify the customer.

b) give the customer an opportunity to correct the equipment problem.

c) inform the customer of the right to bring a complaint to the Federal Communication Commission pursuant to procedures set out in FCC Rules and Regulations Subpart E of Part 68.

You should also know that:

- Your machine is not designed to be connected to a digital PBX system.
- If you intend to use a computer modem or fax modem on the same phone line as your machine, you may experience transmission and reception problems with all the equipment. It is recommended that no other equipment, except for a regular telephone, share the line with your machine.
- If your area experiences a high incidence of lightning or power surges, we recommend that you install surge protectors for both the power and the telephone lines. Surge protectors can be purchased from your dealer or telephone and electronic specialty stores.
- When programming emergency numbers and/or making test calls to emergency numbers, use a non-emergency number to advise the emergency service dispatcher of your intentions. The dispatcher will give you further instructions on how to actually test the emergency number.
- This machine may not be used on coin service or party lines.
- This machine provides magnetic coupling to hearing aids.
- You may safely connect this equipment to the telephone network by means of a standard modular jack, USOC RJ-11C.

Declaration of Conformity (European Countries)

Approvals and Certifications

The CE marking applied to this product symbolizes Samsung Electronics Co., Ltd. Declaration of Conformity with the following applicable 93/68/EEC Directives of the European Union as of the dates indicated:

January 1, 1995: Council Directive 73/23/EEC Approximation of the laws of the member states related to low voltage equipment.

January 1, 1996: Council Directive 89/336/EEC (92/31/EEC), approximation of the laws of the Member States related to electromagnetic compatibility.

March 9, 1999: Council Directive 1999/5/EC on radio equipment and telecommunications terminal equipment and the mutual recognition of their conformity.

A full declaration, defining the relevant Directives and referenced standards can be obtained from your Samsung Electronics Co., Ltd. representative.

EC Certification

Certification to 1999/5/EC Radio Equipment & Telecommunications Terminal Equipment Directive (FAX)

This Samsung product has been self-certified by Samsung for pan-European single terminal connection to the analogue public switched telephone network (PSTN) in accordance with Directive 1999/5/EC. The product has been designed to work with the national PSTNs and compatible PBXs of the European countries:

In the event of problems, you should contact the Euro QA Lab of Samsung Electronics Co., Ltd. in the first instance.

The product has been tested against TBR21. To assist in the use and application of terminal equipment which complies with this standard, the European Telecommunication Standards Institute (ETSI) has issued an advisory document (EG 201 121) which contains notes and additional requirements to ensure network compatibility of TBR21 terminals. The product has been designed against, and is fully compliant with, all of the relevant advisory notes contained in this document.

Replacing the Fitted Plug (for UK Only)

IMPORTANT

The mains lead for this machine is fitted with a standard (BS 1363) 13 amp plug and has a 13 amp fuse. When you change or examine the fuse, you must re-fit the correct 13 amp fuse. You then need to replace the fuse cover. If you have lost the fuse cover, do not use the plug until you have another fuse cover.

Please contact the people from you purchased the machine.

The 13 amp plug is the most widely used type in the UK and should be suitable. However, some buildings (mainly old ones) do not have normal 13 amp plug sockets. You need to buy a suitable plug adaptor. Do not remove the moulded plug.

WARNING

If you cut off the moulded plug, get rid of it straight away.

You cannot rewire the plug and you may receive an electric shock if you plug it into a socket.

IMPORTANT WARNING: You must earth this machine.

The wires in the mains lead have the following color code:

- Green and Yellow: Earth
- Blue: Neutral
- Brown: Live

If the wires in the mains lead do not match the colors marked in your plug, do the following:

You must connect the green and yellow wire to the pin marked by the letter "E" or by the safety 'Earth symbol' or colored green and yellow or green.

You must connect the blue wire to the pin which is marked with the letter "N" or colored black.

You must connect the brown wire to the pin which is marked with the letter "L" or colored red.

You must have a 13 amp fuse in the plug, adaptor, or at the distribution board.

EU Declaration of Conformity (LVD, EMC)

Multi-Function Printer
(Product name)

SCX-5530FN, SCX-5330N
(Model Number)

For the following product :

Samsung Electronics Co., Ltd. 259, Gongdan-Dong, Gumi-City, Gyeongsangbuk-Do, 730-030 Korea.
Shandong Samsung Telecommunications Co., Ltd.Sanxing Road, Weihai Hi-Tech, IDZ
Shandong Province, China 264209

Manufactured at :

We hereby declare, that all major safety requirements, concerning to CE Marking Directive[93/68/EEC] and Low Voltage Directive [73/23/EEC], ElectroMagnetic Compatibility [89/336/EEC], amendments [92/31/EEC] are fulfilled, as laid out in the guideline set down by the member states of the EEC Commission.
This declaration is valid for all samples that are part of this declaration, which are manufactured according to the production charts appendix. The standards relevant for the evaluation of safety & EMC requirements are as follows :

LVD : EN 60950-1:2001+A11

EMC : EN 55022:1998+A1:2000+A2:2003, EN 55024:1998+A1:2001+A2:2003
EN61000-3-2:2000, EN61000-3-3:1995+A1:2001

1. Certificate of conformity / Test report issued by :
2. Technical documentation kept at :
which will be made available upon request.
(Manufacturer)

LVD : SEMKO
EMC : SAMSUNG Suwon EMC Lab. in Korea

(Representative in the EU)

Samsung Electronics Co., Ltd.

Samsung Electronics Co., Ltd. #259, Gongdan-Dong, Gumi-City, GyeongBuk, Korea. 730-030 2006-12-06	任燦淳 **Whan-Soon Yim / Senior Manager**
(place and date of issue)	(name and signature of authorized person)

Samsung Electronics Euro QA Lab. Blackbushe Business Park, Saxony Way, Yateley, Hampshire, GU46 6GG, UK 2006-12-06	Y. S. Park **Yong-Sang Park / Manager**
(place and date of issue)	(name and signature of authorized person)

1 Introduction

Thank you for purchasing this Samsung multifunctional product. Your machine provides printing, copying, scanning, and faxing functions.

This chapter includes:

- **Special features**
- **Machine overview**
- **Control panel overview**

Note

Your machine does not support some of these features, please check the specifications (Page 13.1)

Special features

Your new machine is equipped with special features that improve print quality. You can:

Print with excellent quality and speed

- You can print with a resolution of up to **1200 dpi [Best]**. See the **Software Section**.
- Your machine prints A4-sized paper at up to 45 ppm[a] and letter-sized paper at up to 43 ppm.
- For duplex printing, your machine prints A4-sized paper at up to 42 ipm[b] and letter-sized paper at up to 43 ipm.

Handle paper flexibly

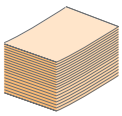

- The **multi-purpose tray** supports letterhead, envelopes, labels, transparencies, custom-sized media, postcards, and heavy paper. The **multi-purpose tray** holds up to 100 sheets of plain paper.
- The **550-sheet tray 1** and **550-sheet optional tray 2** support plain paper in various sizes.

Create professional documents

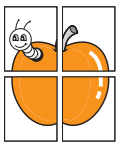

- Print **Watermarks**. You can customize your documents with words, such as “Confidential”. See the **Software Section**.
- Print **Posters**. The text and pictures of each page of your document are magnified and printed across the sheet of paper and can then be taped together to form a poster. See the **Software Section**.

Save time and money

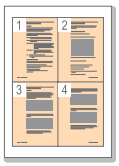

- You can print multiple pages on one single sheet of paper to save paper.
- You can use preprinted forms and letterhead with plain paper. See the **Software Section**.
- This machine automatically **conserves electricity** by substantially reducing power consumption when not in use.

a. pages per minute
b. images per minute

Expand your machine’s capacity

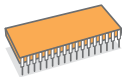

- Your printer has 128 MB of memory which can be expanded to **512 MB**. Page 12.1.
- A **Network interface** enables network printing. Your machine is come with a built-in network interface, 10/100 Base TX.
- Zoran IPS Emulation* compatible with **PostScript 3 Emulation*** (PS) enables PS printing.

* Zoran IPS Emulation compatible with PostScript 3

- © Copyright 1995-2005, Zoran Corporation. All rights reserved. Zoran, the Zoran logo, IPS/PS3, and OneImage are trademarks of Zoran Corporation.

* 136 PS3 fonts
Contains UFST and MicroType from Monotype Imaging Inc.

Print in various environments

- You can print with **Windows 98/Me/NT 4.0/2000/XP/2003** as well as **Linux** systems and **Macintosh** systems.
- Your machine come with **USB** interface and a **network** interface.

Copy originals in several forms

- Producing a sequential 2-sided document allows you to create a booklet.
- At the same time, the quality and the size of output image can be adjusted and enhanced.
- Erase punch holes or staple marks of originals, and containing color in the background like a newspaper.

Scan originals and send it right away

- By Email, SMB, FTP, or network scanning program, you can send the scanned file to several destinations.
- The keyboard on the touch screen of the machine’s control panel makes you to simply type the email address to send it immediately.
- You can scan originals in color mode and save them in JPEG, JIF format which has more precise compression format for color bitmaps.

Reserving the time to transmit a Fax

- You can specify the certain time to transmit the fax and also send the fax to several stored destinations.
- After the transmission, the machine may print out the fax reports according to the setting.

Machine overview

These are the main components of your machine:

Front view

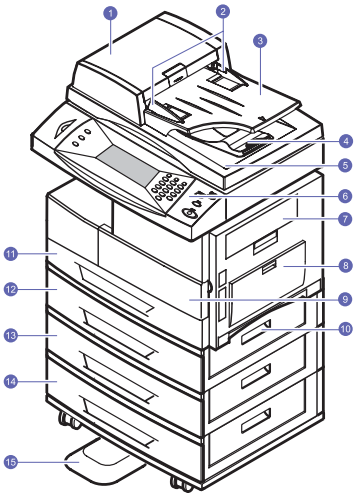

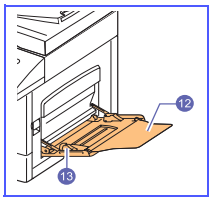

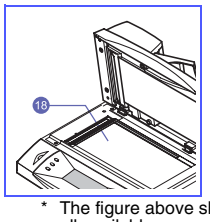

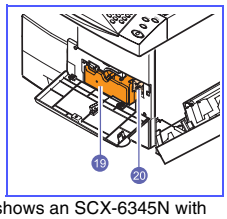

* The figure above shows an SCX-6345N with all available accessories.

1	DADF (Duplex Automatic Document Feeder)	11	tray 1
2	document width guides	12	optional tray 2
3	document input tray	13	optional tray 3
4	document output tray	14	optional tray 4
5	scanner lid	15	optional tray stand
6	control panel	16	multi-purpose tray extension
7	side cover	17	multi-purpose tray paper width guides
8	multi-purpose tray	18	scanner glass
9	front cover	19	toner cartridge
10	optional tray jam cover	20	drum cartridge

Rear view

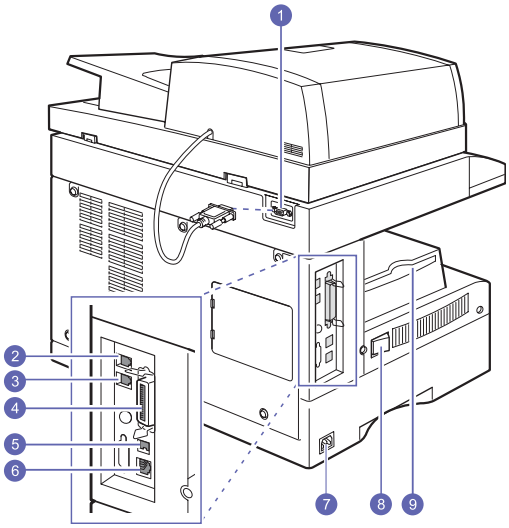

* The figure above shows an SCX-6345N with all available accessories.

1		6	network port
2	extension telephone socket (EXT)	7	power receptacle
3	telephone line socket (LINE)	8	power switch
4		9	output support
5	USB port		

Control panel overview

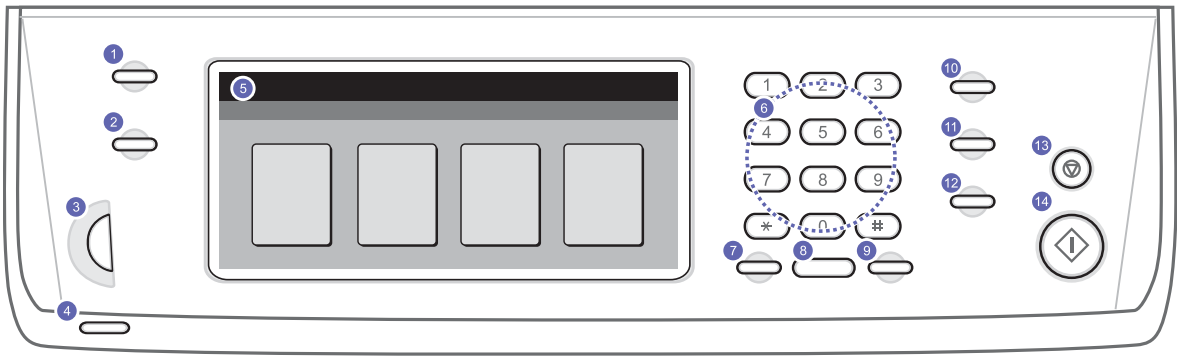

1	**Machine Setup**: Sets the value of machine setup.	8	**Redial/Pause**: In Standby mode, redials the last number, or in Edit mode, inserts a pause into a fax number.
2	**Job Status**: Enters job status menu which shows the current running jobs, waiting jobs or completed jobs.	9	**On Hook Dial**: Engages the telephone line.
3	**Screen brightness dial**: adjusts the brightness of the touch screen.	10	**Power Saver**: Enters the machine into the power save mode.
4	**Status**: Shows the status of your machine. See page 1.4.	11	**Interrupt**: Stops a progressing job for urgent copy job.
5	**Screen**: Displays the current machine status, prompts during an operation, and user can set manus since it is the touch screen.	12	**Clear All**: Sets the machine with default values.
6	**number keypad**: dials fax number, enters the number of copied document or option values.	13	**Stop**: Stops an operation at any time. The pop up window appears on the screen showing the current job that user can stop or resume.
7	**Clear**: Deletes character of string in the editing area of screen.	14	**Start**: Starts a job.

Machine Setup button

Through this button, you can browse the current machine setting and set the value of the machine. (Page 8.1)

- **Machine Status**: shows the current statement of the machine.
- **Admin Setting**: allows administrator to set up the machine.

Job Status button

When user presses **Job Status** button, LCD shows the current running & waiting jobs and completed jobs.

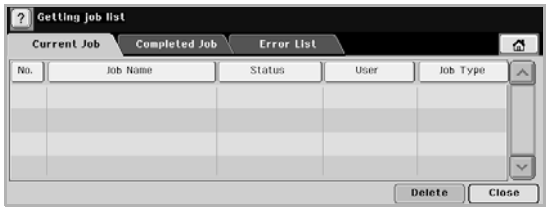

- **Current Job**: shows the list of jobs in progress and in waiting.
- **Complete Job**: provides the list of jobs completed.
- **Error List**: shows the list of error occurred in the machine.
- **No.**: gives the order of jobs. The job in No. 001 is currently in progress.
- **Job Name**: shows the job information like name and type.
- **Status**: gives the current state of each job.
- **User**: provides user name, mainly computer name.
- **Job Type**: TBD
- **Delete**: removes the selected job from the list.
- **Close**: closes the job status window and switches to previous view.

Status

Status	Description
Off	• The machine is off-line. • The machine is in Power Save mode. When data is received, or any button is pressed, it switches to on-line automatically.

Status		Description
Green	On	The machine is on-line and can be used.
	Blinking	• When the backlight slowly blinks, the machine is receiving data from the computer. • When the backlight fast blinks, the machine is printing data.
Red	On	• The toner cartridge is totally exhausted. Remove the old toner cartridge and install a new one. See page 9.4. • The drum cartridge is totally exhausted. Remove the old drum cartridge and install a new one. See page 9.5. • A paper jam has occurred. To solve the problem, see page 10.2. • The front cover is open. Close the front cover. • There is no paper in the tray. Load paper in the tray. • The lifespan of the toner cartridge is reached, and you selected **Stop** at the **Toner Exhausted** prompt. See page 10.8. • The machine has stopped due to a major error. Check the display message. See page 10.8 for details on the meaning of the error message.
	Blinking	• A minor error has occured and the machine is waiting the error to be cleared. Check the display message. When the problem is cleared, the machine resumes. • The lifespan of the toner cartridge is reached, and you selected **Continue** at the **Toner Exhausted** prompt. See page 10.8. • The toner cartridge is low. Order a new toner cartridge. You can temporarily improve print quality by redistributing the toner. See page 10.8.

Touch Screen

The touch screen gives you the convenient operation of the machine. Once you press the **Status**?? button or home icon ( ) on the screen, it shows the main 4 options which you can select.

- ? (Help): shows Help.
- **Copy**: enters to Copy menu.

- **Fax**: enters to Fax menu.
- **Scan to E-mail**: enters to Scan to E-mail menu.
- **Stored Documents**: enters to Stored Documents menu.
- **Logout**: logouts from the current log in account.

Power Saver button

Enters the machine into the power save mode.

Status		Description
Off		The machine is not in power save mode.
Green	On	The machine is in power save mode.

Interrupt button

When you press this button, the machine goes into interrupt mode which means it stops a printing job for urgent machine use.

Status		Description
Off		The machine is not in interrupt printing mode.
Green	On	The machine is in interrupt printing mode.

Note
Interrupt mode is resumed to default value (Off) after the machine shutdown or reset.

2 Getting Started

This chapter gives you step-by-step instructions for setting up the machine's systems.

This chapter includes:

- **Setting up the hardware**
- **Setting up the software**
- **Setting up the network**
- **Machine's basic settings6**
- **Understanding keyboard**

Setting up the hardware

This part shows the setting steps of the hardware which is explained in Quick Install Guide. Make sure you read Quick Install Guide and complete following steps.

1 Select a stable location.

Select a level, stable place with adequate space for air circulation. Allow extra space for opening covers and trays.

The area should be well-ventilated and away from direct sunlight or sources of heat, cold, and humidity. Do not set the machine close to the edge of your desk or table.

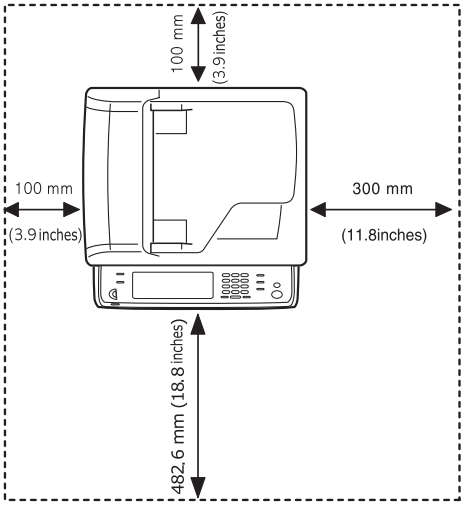

2 Unpack the box of the machine and check enclosed items.

3 Remove the tapes which are holding the machine tight.

4 Install the toner cartridge.

5 Load paper.

6 Make sure that all the cables are connected to the machine.

7 Turn the machine on.

Setting up the software

You can install the machine software for printing, copying, faxing, and scanning. Those software includes drivers, applications, and other user friendly programs.

Follow the steps for proper use of the machine.

Note

The following procedure is based on the operating system, Windows XP. The procedure and installation window that appears to install software may differ depending on the operating system, the printer feature, or interface in use. (See the **Software Section**.)

1 Make sure that the network setup for your machine is completed. (Page x.x)

Note

Connect the USB cable if you want to use the printer via the USB cable.

2 All applications should be closed on your computer before beginning installation.

3 Insert the Printer Software CD-ROM into your CD-ROM drive.

4 The CD-ROM should automatically run, and an installation window appears. Click **Next**.

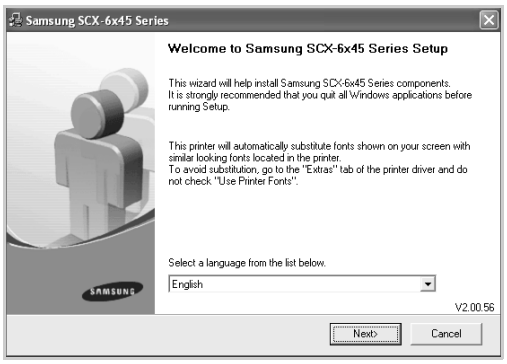

- If necessary, select a language from the drop-down list.
- **View User's Guide**: Allows you to view the User's Guide. If your computer doesn't have Adobe Acrobat, click on this option and it will automatically install Adobe Acrobat Reader for you.

If the installation window does not appear, click **Start** and then **Run**. Type X:**Setup.exe**, replacing "X" with the letter which represents your drive and click **OK**.

5 Select **Custom installation**. Click **Next**.

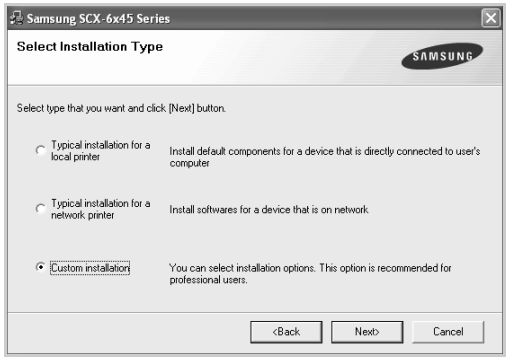

If the USB cable is connected, select Typical installation for a local printer and skip to step 8.

6 Select Add TCP/IP Port, and enter your machine's IP Address. Click Next.(100.bmp)Note: If you are not sure of IP address, contact your network administrator, or print a network configuration page. (Page x.x)

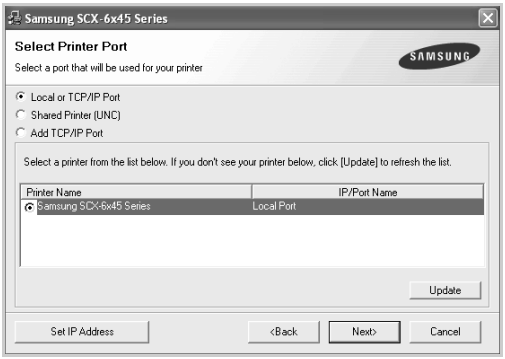

7 Select components, and click **Next**.

8 Set Printer window appears, click **Next**. Then the computer starts to copy files and install software.

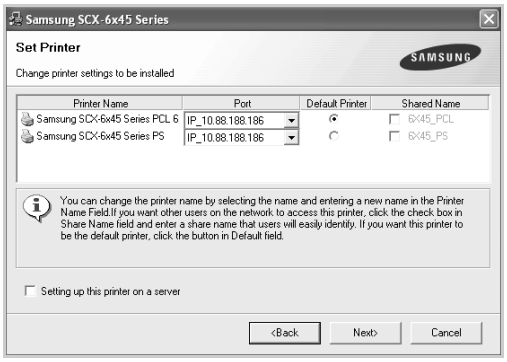

9 When the installation is completed, click **Finish**.

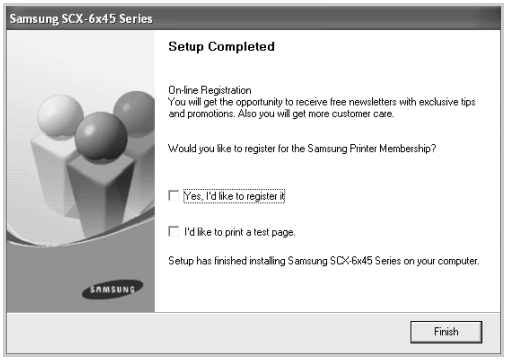

Note
After setup is complete, if your printer driver doesn't work properly, reinstall the printer driver. See the **Software Section**.

Setting up the network

You need to set up the network protocols on the machine to use it as your network printer. You can set up the basic network settings through the machine's touch screen.

Note
For detailed information on network setting, please, refer to handbook 'Network Printer Quick Guide', or on-line user's guide within Network Utilities CD.
If you want to use the machine only locally through USB cable, go to Setting up the network.

Supported operating systems

The following table shows the network environments supported by the machine:

Item	Requirements
Network interface	10/100 Base-TX
Network operating system	Novell NetWare 4.x, 5.x, 6.x Windows 98/Me/NT 4.0/2000/XP/2003 Various Linux OS Macintosh OS 10.3 ~ 10.4
Network protocols	NetWare IPX/SPX TCP/IP EtherTalk
Dynamic addressing server	DHCP, BOOTP

Configuring network protocol via the machine

You can setup the network parameters, configuring TCP/IP, Netware, AppleTalk. The explanation bellow is the case you set TCP/IP protocol. If you use besides TCP/IP, please refer to on-line user's guide within Network Utilities CD.

1 Connect your machine to a network with an RJ-45 Ethernet cable.

2 Make sure you turn on the machine and your computer.

3 Press **Machine Setup** button in the control panel.

4 Press **Admin Setting**.

5 Login message appears, enter password (factory setting: 1111) with number keypad and press **OK**.

6 Press **Setup** tab > **Network Setup**.

7 Select **TCP/IP Protocol**.

8 Press **IP Setting**.

9 Select **Static** and enter **IP Address** as well as **Subnet Mask** and **Gateway** address.

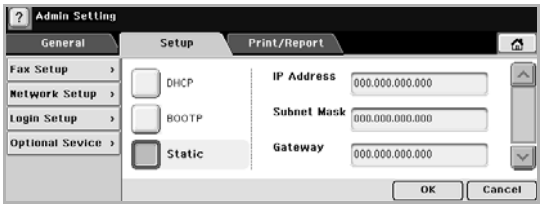

Notes

- If you are using **DHCP** or **BOOTP**, select that option.
- Contact the network administrator, if you are not sure what to select.

10 Press **OK**.

Note

You can also set up the network settings through the network administration programs.

- **SyncThru™ Web Admin Service**: Web-based printer management solution for network administrators. **SyncThru™ Web Admin Service** provides you with an efficient way of managing network devices and lets you remotely monitor and troubleshoot network printers from any site with corporate intranet access.
- **SyncThru™ Web Service**: Web server embedded to your network print server, which allows you to:
  - Configure the network parameters necessary for the machine to connect to various network environments.
  - Customize e-mail settings and set up **Address Book** for scanning to email.
  - Customize server settings and set up **Address Book** for scanning to the FTP or SMB servers.
  - Customize printer, copy, and fax settings.
- **SetIP**: Utility program allowing you to select a network interface and manually configure the IP addresses for use with the TCP/IP protocol.
  For further details, refer to the user's guide on the network utilities CD that came with your machine.

Machine's basic settings

After setting the machine up, you may need to set the machine's basic features. Check next explanation whether you would like to set or change values.

Setting ionin password

To set your machine up or change the settings, you have to login to the machine. To change password, follow the next steps.

1 Press **Machine Setup** button in the control panel.

2 Press **Admin Setting**.

3 Login message appears, enter password (Factory setting: 1111) with number keypad and press **OK**.

4 Press **Setup** tab > **Login Setup**.

5 Press **Change Password**.

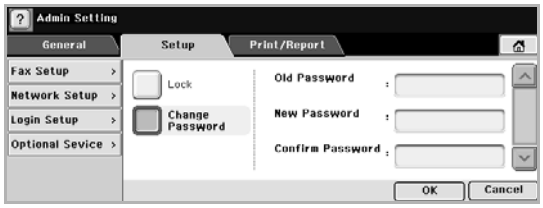

6 Enter old password and new password.

7 Press **OK**.

Registering the service center and contact information

Setting the date and time

The current date and time are shown on the display when your machine is on and ready to work. All of your faxes will have the date and time printed on them.

1 Press **Machine Setup** button in the control panel.

2 Press **Admin Setting**.

3 Login message appears, enter password with number keypad and press **OK**. (Page x.x)

4 Press **General** tab > **Data/Time** > **Set Date/Time**.

5 Enter data and time using the number keypad.

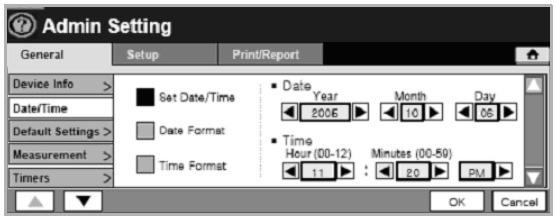

Note
To change the format of data and time, press **Date Format** and **Time Format**.

6 Press **OK**.

Changing the display language

To change the language that appears on the touch screen, follow these steps.

1 Press **Machine Setup** button in the control panel.

2 Press **Admin Setting**.

3 Login message appears, enter password with number keypad and press **OK**. (Page x.x)

4 Press **General** tab.

5 Press down arrow to switch the screen, press **Language**.

6 Select language.

7 Press **OK**.

Setting job timeout

When there is no input, the machine waits the specific time. You can set the time duration the machine waits.

1 Press **Machine Setup** button in the control panel.

2 Press **Admin Setting**.

3 Login message appears, enter password with number keypad and press **OK**. (Page x.x)

4 Press **General** tab.

5 Press **Timers**.

6 Select **System Timeout**.

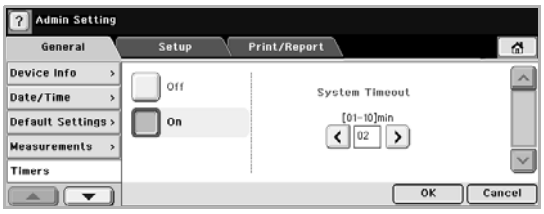

7 Select time using left/right arrows.

8 Press **OK**.

Using energy saving feature

The machine provides energy saving features.

- **Scan Power Save**: reduces machine's power consumption when it is not in actual use.
- **Power Save**: Save power by turning off the scan lamp. The scan lamp under the scanner glass automatically turns off when it is not in use to reduce power consumption and extend the life of the lamp.

1 Press **Machine Setup** button in the control panel.

2 Press **Admin Setting**.

3 Login message appears, enter password with number keypad and press **OK**. (Page x.x)

4 Press **General** tab.

5 Press down arrow to switch the screen, press **Energy Saver**.

6 Select appropriate option and time.

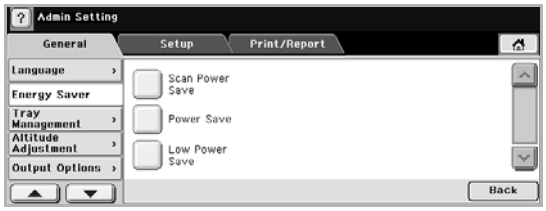

7 Press **OK**.

Setting the tray and paper

You can select the tray and paper you use for printing job.

1 Press **Machine Setup** button in the control panel.

2 Press **Admin Setting**.

3 Login message appears, enter password with number keypad and press **OK**. (Page x.x)

4 Press **General** tab.

5 Press down arrow to switch the screen, press **Tray Management**.

6 Select tray and it options such as paper size, type, and Tray Confirmation Message.

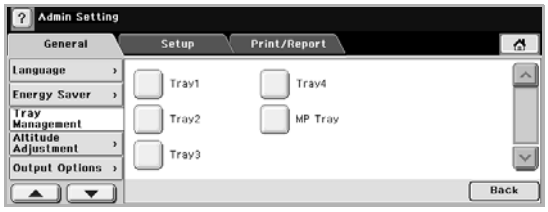

7 Press **OK**.

Changing the default settings

You can set the default values for copy, fax, email, scan and paper at once.

1 Press **Machine Setup** button in the control panel.

2 Press **Admin Setting**.

3 Login message appears, enter password with number keypad and press **OK**. (Page x.x)

4 Press **General** tab > **Default Settings** > **Default Option**.

5 Press function you want to change, and change its settings.

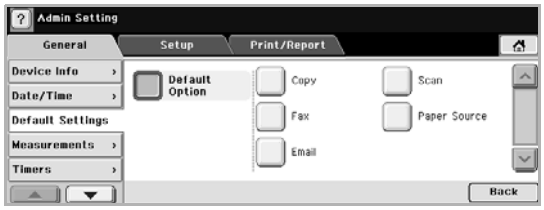

For example, if you want to change the default setting of darkness for copy job, press **Copy** > **Darkness**. And adjust the darkness.

6 Press **OK**.

Understanding keyboard

You can enter alphabet characters, numbers or special symbols using the keyboard on the touch screen. Especially this keyboard is arranged as like a normal keyboard for its better usability for user.

By touching the input area where you need to enter characters, the keyboard pops up on the screen. The keyboard below is the default one which shows the lowercase letters.

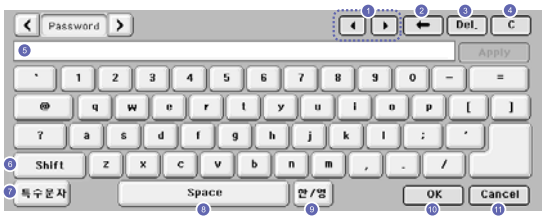

1	**Left/Right**: moves the curser between characters in the input area.
2	**Backspace**: deletes the character right side of curser.
3	**Delete**: deletes the character left side of curser.
4	**Clear**: deletes all characters in input area.
5	**Input area**: enter letters within this line.
6	**Shift**: converts lowercase keys to uppercase keys.
7	**Symbol**: switches the alphabet keyboard to symbolic keyboard.
8	**Space**: enters blank between characters.
9	**Top domain**: chooses top level domains like .com, .net, .org, etc. By pressing arrow key, you can select different domains. You can set the 5 different top level domains in Admin settings.
10	**OK**: saves and closes input result.
11	**Cancel**: cancels and closes input result.

Note
If you enter the email address, then the following keyboard pops up. After you enter the address, press Apply to activate entered address. Press arrow key beside for rotating From, To, CC, Bcc, Subject, Message in order.

Note
If you enter the ????s, then the following keyboard pops up. ID is changeable to for

3 Loading originals and print media

This chapter introduces you to how to load originals and print media into your machine.

This chapter includes:

- **Loading originals**
- **Selecting print media**
- **Loading paper**
- **Setting the paper size and type**

Loading originals

You can use the scanner glass or DADF to load an original for copying, scanning, and sending a fax.

On the scanner glass

Make sure that no originals are in the DADF. If an original is detected in the DADF, the machine gives it priority over the original on the scanner glass. To get the best scan quality, especially for colored or gray-scaled images, use the scanner glass.

1 Lift and open the scanner lid.

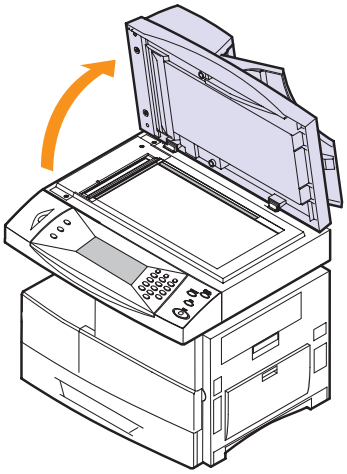

2 Place the original **face down** on the scanner glass and align it with the registration guide at the top left corner of the glass.

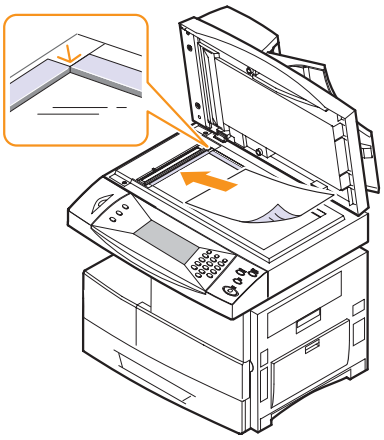

3 Close the scanner lid.

Notes

- Leaving the scanner lid open while copying may affect copy quality and toner consumption.
- Dust on the scanner glass may cause black spots on the printout. Always keep it clean.
- If you are copying a page from a book or magazine, lift the scanner lid until its hinges are caught by the stopper and then close the lid. If the book or magazine is thicker than 30 mm, start copying with the lid open.

In the DADF

Using the DADF, you can load up to 50 sheets of paper (75 g/m^2) for one job.

When you use the DADF:

- Do not load paper smaller than 142 x 148 mm or larger than 216 x 356 mm.
- Do not attempt to load the following types of paper:
  - carbon-paper or carbon-backed paper
  - coated paper
  - onion skin or thin paper
  - wrinkled or creased paper
  - curled or rolled paper
  - torn paper
- Remove all staples and paper clips before loading.
- Make sure any glue, ink, or correction fluid on the paper is completely dry before loading.
- Do not load originals that include different sizes or weights of paper.
- Do not load booklets, pamphlets, transparencies, or documents having other unusual characteristics.

To load an original into the DADF:

1 Load the original face up into the DADF. Make sure that the bottom of the original stack matches the paper size marked on the document input tray.

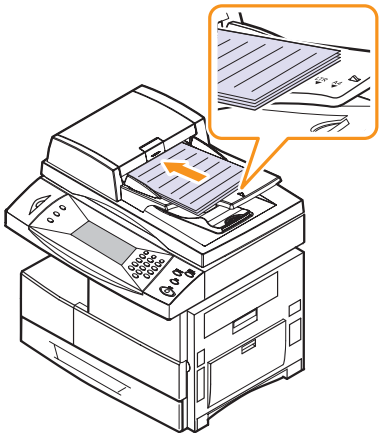

2 Adjust the document width guides to the paper size.

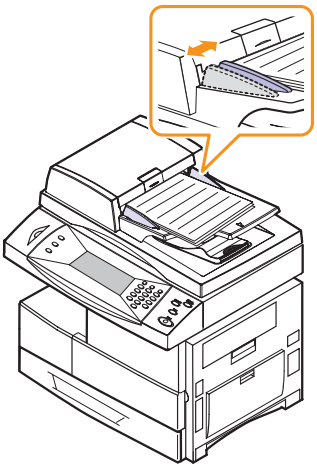

Note
Dust on the DADF glass may cause black lines on the printout. Always keep it clean.

Selecting print media

You can print on a variety of print media, such as plain paper, envelopes, labels, and transparencies. Always use print media that meet the guidelines for use with your machine. Print media that does not meet the guidelines outlined in this user's guide may cause the following problems:

- Poor print quality
- Increased paper jams
- Premature wear on the machine.

Properties, such as weight, composition, grain, and moisture content, are important factors that affect the machine's performance and the output quality. When you choose print materials, consider the following:

- Desired outcome: The print media you choose should be appropriate for your project.
- Size: You can use any size media that fits easily within the paper adjusters of the paper tray.
- Weight: Your machine supports print media weights as follows:
  - 60 to 163 g/m^2 bond for the tray 1 and optional tray 2/3/4
  - 60 to 163 g/m^2 bond for the multi-purpose tray
  - 60 to 90 g/m^2 for duplex printing
- Brightness: Some print media are whiter than others and produce sharper, more vibrant images.
- Surface smoothness: The smoothness of the print media affects how crisp the printing looks on the paper.

Notes
- Some print media may meet all of the guidelines in this section and still not produce satisfactory results. This may be the result of improper handling, unacceptable temperature and humidity levels, or other variables over which Samsung has no control.
- Before purchasing large quantities of print media, ensure that it meets the requirements specified in this user's guide.

Caution
Using print media that does not meet these specifications may cause problems, requiring repairs. Such repairs are not covered by Samsung's warranty or service agreements.

Supported print media types and sizes

Type	Size	Dimensions	Weight[1]	Capacity[2]
Plain paper	Letter	215.9 x 279 mm (8.5 x 11 inches)	• 60 to 90 g/m^2 (16 ~ 24 lb) bond for the tray • 60 to 163 g/m^2 (16 ~ 43 lb) bond for the multi-purpose tray	• 550 sheets of 75 g/m^2 (20 lb bond) bond paper for the tray • 100 sheets of 75 g/m^2 (20 lb bond) in the multi-purpose tray
	Legal	215.9 x 355.6 mm (8.5 x 14 inches)		
	Folio	216 x 330.2 mm (8.5 x 13 inches)		
	A4	210 x 297 mm (8.27 x 11.69 inches)		
	Oficio	216 x 343 mm (8.5 x 13.5 inches)		
	JIS B5	182 x 257 mm (7.18 x 10.12 inches)		
	Executive	184.2 x 266.7 mm (7.25 x 10.5 inches)		
	A5	148.5 x 210 mm (5.85 x 8.27 inches)		
Envelope	Envelope B5	176 x 250 mm (6.92 x 9.48 inches)	75 to 90 g/m^2 (20 ~ 24 lb)	10 sheets of 75 g/m^2 (20 lb bond) in the multi-purpose tray
	Envelope Monarch	98.4 x 190.5 mm (3.88 x 7.5 inches)		
	Envelope COM-10	105 x 241 mm (4.12 x 9.5 inches)		
	Envelope DL	110 x 220 mm (4.33 x 8.66 inches)		
	Envelope C5	162 x 229 mm (6.38 x 9.02 inches)		
	Envelope C6	114 x 162 mm (4.48 x 6.37 inches)		
Transparency	Letter, A4	Refer to the Plain paper section	138 to 146 g/m^2 (37 to 39 lb bond)	30 sheets of 75 g/m^2 (20 lb bond)
Labels	Letter, Legal, Folio, A4, JIS B5, Executive, A5	Refer to the Plain paper section	120 to 150 g/m^2 (32 to 40 lb bond)	30 sheets of 75 g/m^2 (20 lb bond)
Card stock	Letter, Legal, Folio, A4, JIS B5, Executive, A5	Refer to the Plain paper section	60 to 163 g/m^2 (16 ~ 43 lb)	30 sheets of 75 g/m^2 (20 lb bond)
Minimum size (custom)		98 x 148 mm (3.9 x 5.8 inches)	60 to 163 g/m^2 (16 ~ 43 lb) bond	3s0 sheets of 75 g/m^2 (20 lb bond)
Maximum size (custom)		215.9 x 355.6 mm (8.5 x 14 inches)		

1. If media weight is over 90 g/m^2, use the multi-purpose tray.
2. Maximum capacity may differ depending on media weight, thickness, and environmental conditions.

Media sizes supported in each mode

Mode	Size	Source
Copy mode	Letter, A4, Legal, Folio, Oficio, Executive, ISO B5, A5	• **tray 1** • **optional tray 2** • **multi-purpose tray**
Single side printing	All sizes supported by the machine	• **tray 1** • **optional tray 2** • **multi-purpose tray**
Duplex printing[1]	Letter, A4, Legal, Folio, Oficio	• **tray 1** • **optional tray 2** • **multi-purpose tray**
Fax mode	Letter, A4, Legal	• **tray 1** • **optional tray 2**

1. 75 to 90 g/m^2 (20 ~ 24 lb bond) only

Guidelines for selecting and storing print media

When selecting or loading paper, envelopes, or other print materials, keep these guidelines in mind:

- Always use print media that conform with the specifications listed on page 3.3.
- Attempting to print on damp, curled, wrinkled, or torn paper can cause paper jams and poor print quality.
- For the best print quality, use only high quality copier grade paper specifically recommended for use in laser printers.
- Avoid using the following media types:
  - Paper with embossed lettering, perforations, or a texture that is too smooth or too rough
  - Erasable bond paper
  - Multi-paged paper
  - Synthetic paper and thermally reactive paper
  - Carbonless paper and Tracing paper.

  Use of these types of paper could result in paper jams, chemical smells, and damage to your machine.
- Store print media in its ream wrapper until you are ready to use it. Place cartons on pallets or shelves, not on the floor. Do not place heavy objects on top of the paper, whether it is packaged or unpackaged. Keep it away from moisture or other conditions that can cause it to wrinkle or curl.
- Store unused print media at temperatures between 15 °C and 30 °C. The relative humidity should be between 10% and 70%.
- Store unused print media in a moisture-proof wrap, such as a plastic container or bag, to prevent dust and moisture from contaminating your paper.
- Load special media types one sheet at a time through the multi-purpose tray to avoid paper jams.
- To prevent print media, such as transparencies and label sheets, from sticking together, remove them as they print out.

Guidelines for special print media

Media type	Guidelines
Envelopes	• Successful printing on envelopes depends upon the quality of the envelopes. When selecting envelopes, consider the following factors: - Weight: The weight of the envelope paper should not exceed 90 g/m^2 or jamming may occur. - Construction: Prior to printing, envelopes should lie flat with less than 6 mm curl, and should not contain air. - Condition: Envelopes should not be wrinkled, nicked, or otherwise damaged. - Temperature: You should use envelopes that are compatible with the heat and pressure of the machine during operation. • Use only well-constructed envelopes with sharp and well creased folds. • Do not use stamped envelopes. • Do not use envelopes with clasps, snaps, windows, coated lining, self-adhesive seals, or other synthetic materials. • Do not use damaged or poorly made envelopes. • Be sure the seam at both ends of the envelope extends all the way to the corner of the envelope. 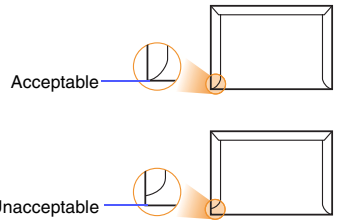 • Envelopes with a peel-off adhesive strip or with more than one flap that folds over to seal must use adhesives compatible with the machine's fusing temperature of 180 °C for 0.1 second. The extra flaps and strips might cause wrinkling, creasing, or jams, and may even damage the fuser. • For the best print quality, position margins no closer than 15 mm from the edges of the envelope. • Avoid printing over the area where the envelope's seams meet.

Media type	Guidelines
Transparencies	• To avoid damaging the machine, use only transparencies designed for use in laser printers. • Transparencies used in the machine must be able to withstand 180 °C, the machine's fusing temperature. • Place them on a flat surface after removing them from the machine. • Do not leave them in the paper tray for long periods of time. Dust and dirt may accumulate on them, resulting in spotty printing. • To avoid smudging caused by fingerprints, handle them carefully. • To avoid fading, do not expose printed transparencies to prolonged sunlight. • Ensure that transparencies are not wrinkled, curled, or have any torn edges.
Labels	• To avoid damaging the machine, use only labels designed for use in laser printers. • When selecting labels, consider the following factors: - Adhesives: The adhesive material should be stable at 180 °C, the machine's fusing temperature. - Arrangement: Only use labels with no exposed backing between them. Labels can peel off sheets that have spaces between the labels, causing serious jams. - Curl: Prior to printing, labels must lie flat with no more than 13 mm of curl in any direction. - Condition: Do not use labels with wrinkles, bubbles, or other indications of separation. • Make sure that there is no exposed adhesive material between labels. Exposed areas can cause labels to peel off during printing, which can cause paper jams. Exposed adhesive can also cause damage to machine components. • Do not run a sheet of labels through the machine more than once. The adhesive backing is designed for only a single pass through the machine. • Do not use labels that are separating from the backing sheet or are wrinkled, bubbled, or otherwise damaged.
Card stock or custom-sized materials	• Do not print on media smaller than 98 mm wide or 148 mm long. • In the software application, set margins at least 6.4 mm away from the edges of the material.

Media type	Guidelines
Preprinted paper	• Letterhead must be printed with heat-resistant ink that will not melt, vaporize, or release hazardous emissions when subjected to the machine's fusing temperature of 180 °C for 0.1 second. • Letterhead ink must be non-flammable and should not adversely affect printer rollers. • Forms and letterhead should be sealed in a moisture-proof wrapping to prevent changes during storage. • Before you load preprinted paper, such as forms and letterhead, verify that the ink on the paper is dry. During the fusing process, wet ink can come off preprinted paper, reducing print quality.

Loading paper

In the tray 1

Load the print media you use for the majority of your print jobs in the tray 1. The tray 1 can hold a maximum of 550 sheets of 75 g/m^2 plain paper.

You can purchase an optional tray (tray 2) and attach it below the standard tray to load an additional 550 sheets of paper. For order information for an optional tray, see page 11.1.

Loading paper in the tray 1 or optional tray 2

1 To load paper, pull open the paper Tray and place paper with the side you want to print facing up.

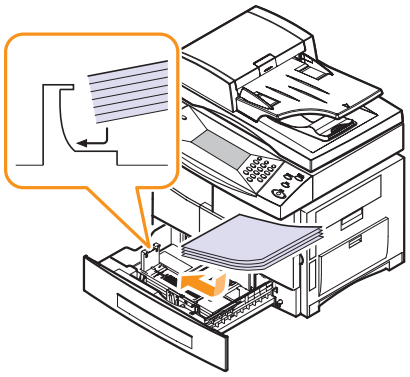

2 After loading paper, set the paper type and size for the multi-purpose tray. See page 3.8 for copying and faxing or the **Software Section** for PC-printing.

Notes

- If you experience problems with paper feed, place one sheet at a time in the multi-purpose tray.
- You can load previously printed paper. The printed side should be facing up with an uncurled edge at the front. If you experience problems with paper feed, turn the paper around. Note that print quality is not guaranteed.

Changing the size of the paper in the paper tray

To load longer sizes of paper, such as Legal-sized paper, you need to adjust the paper guides to extend the paper tray.

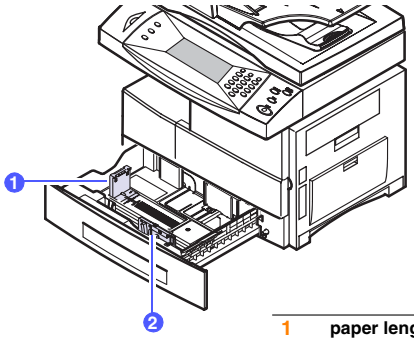

1	paper length guide
2	paper width guide

1 Adjust the paper length guide to the desired paper length. It is preset to Letter or A4 size depending on the country. To load another size, lift and insert the length guide into the corresponding position.

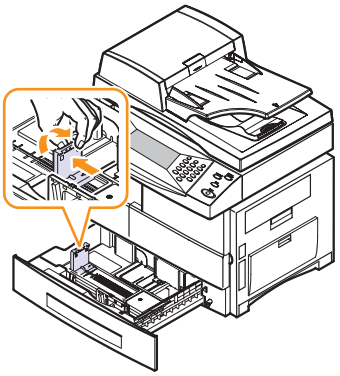

2 After inserting paper into the tray, while pinching the paper width guide as shown, move it toward the stack of paper until it lightly touches the side of the stack. Do not press the guide too tightly to the edge of the paper; the guide may bend the paper.

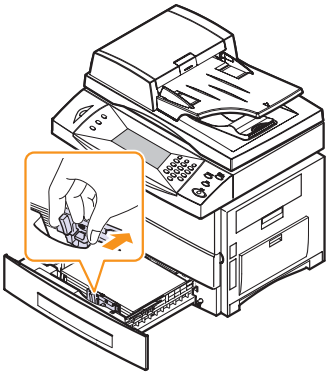

Notes

- Do not push the paper width guides far enough to cause the materials to warp.
- If you do not adjust the paper width guides, it may cause paper jams.

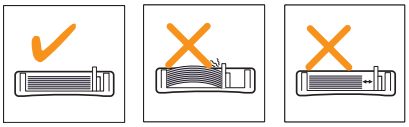

In the multi-purpose tray

The multi-purpose tray can hold special sizes and types of print material, such as transparencies, postcards, note cards, and envelopes. It is useful for single page printing on letterhead or colored paper.

To load paper in the multi-purpose tray:

1 Open the multi-purpose tray and unfold the multi-purpose tray extension, as shown.

2 If you are using paper, flex or fan the edge of the paper stack to separate the pages before loading.

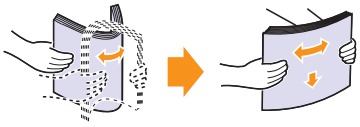

For transparencies, hold them by the edges and avoid touching the print side. Oils from your fingers can cause print quality problems.

3 Load the paper **with the side to be printed on facing down**.

4 Squeeze the multi-purpose tray paper width guides and adjust them

Notes

Depending on the media type you are using, keep the following loading guidelines:

- Envelopes: Flap side down and with the stamp area on the top left side.
- Transparencies: Print side up and the top with the adhesive strip entering the machine first.
- Labels: Print side up and top short edge entering the machine first.
- Preprinted paper: Design side up with the top edge toward the machine.
- Card stock: Print side up and the short edge entering the machine first.
- Previously printed paper: Previously printed side down with an uncurled edge toward the machine.

to the width of the paper. Do not force too much, or the paper will be bent, which will result in a paper jam or skew.

5 After loading paper, set the paper type and size for the multi-purpose tray. See page 3.8 for copying and faxing or the **Software Section** for PC-printing.

Note

The settings made from the printer driver override the settings on the control panel.

6 After printing, fold the multi-purpose tray extension and close the multi-purpose tray.

Tips on using the multi-purpose tray

- Load only one size of print media at a time in the multi-purpose tray.
- To prevent paper jams, do not add paper when there is still paper in the multi-purpose tray. This also applies to other types of print media.
- Print media should be loaded face down with the top edge going into the multi-purpose tray first and be placed in the center of the tray.
- Always load only the print media specified in page 3.2 to avoid paper jams and print quality problems.
- Flatten any curl on postcards, envelopes, and labels before loading them into the multi-purpose tray.
- Make sure to open the rear cover when you print on transparencies. If not, they may tear while exiting the machine.

Setting the paper size and type

After loading paper in the paper tray, you need to set the paper size and type using the control panel buttons. These settings will apply to Copy and Fax modes. For PC-printing, you need to select the paper size and type in the application program you use on your PC.

1 Press **Machine Setup** button in the control panel.

2 Press **Admin Setting**.

3 Login message appears, enter password with number keypad and press **OK**. (Page x.x)

4 Press **General** tab.

5 Press down arrow to switch the screen, press **Tray Management**.

6 Select tray and it options such as paper size, type, and Tray Confirmation Message.

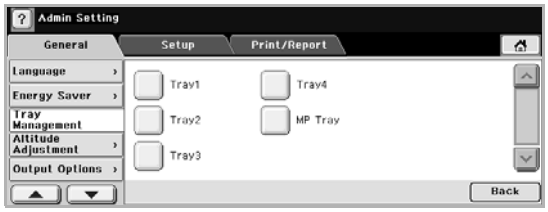

7 Press **OK**.

4 Copying

This chapter gives you information about using your machine as a copy machine.

This chapter includes:

- **Understanding the Copy screen**
- **Copying originals**
- **Changing the settings for each copy**
- **Using special copy features**
- **Setting copy timeout**
- **Changing the default settings for copy job**

Understanding the Copy screen

When you press the **Copy** on **Main** screen, the **Copy** screen appears. If the screen displays other menu, press ( ) to go to **Main** screen.

Basic tab

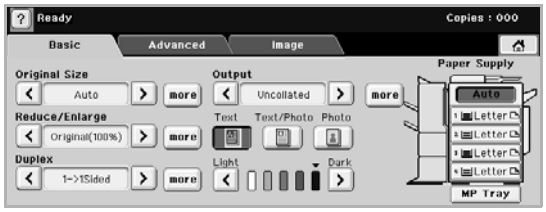

- **Original Size**: selects the size of originals. (Page 4.2)
- **Reduce/Enlarge**: reduces or enlarges the size of a copied image. (Page 4.2)
- **Duplex**: sets the machine to print copies on both sides of paper. (Page 4.3)
- **Output**: selects collated or stapled copy options. (Page 4.3)
- **Text**, **Text/Photo**, **Photo**: improves the copy quality by selecting the document type for the current copy job. (Page 4.3)
- **Light**, **Dark**: adjusts the brightness to make a copy that is easier to read, when the original contains fait markings and dark images. (Page 4.4)
- **Paper Supply**: selects the paper supply tray.

Advanced tab

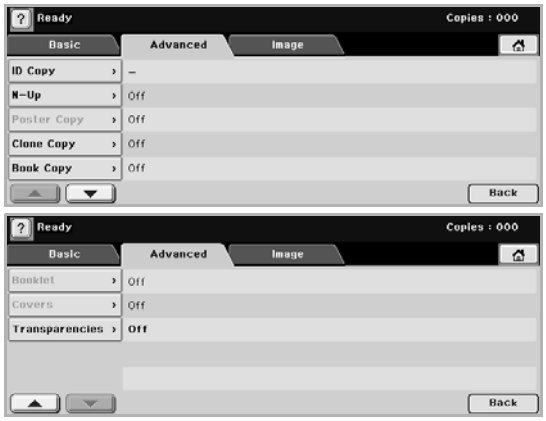

- **ID Copy**: prints 2 sided originals on one sheet of paper. This feature is helpful for copying a small-sized item, such as a name card. (Page 4.4)
- **N-Up**: prints 2 or 4 original images reduced to fit onto one sheet of paper. (Page 4.4)
- **Poster Copy**: prints an image onto 9 sheets of paper (3x3). (Page 4.4)
- **Clone Copy**: prints multiple image copies from the original document on a single page. (Page 4.5)
- **Book Copy**: allows you to copy an entire book. (Page 4.5)
- **Booklet**: creates booklets from a sequential set of either 1 sided or 2 sided originals. (Page 4.5)
- **Covers**: automatically adds covers to your copied set using stock taken from a different tray than the copies. (Page 4.5)
- **Transparencies**: adds either a blank or printed divider between each transparency within a set. (Page 4.6)

Image tab

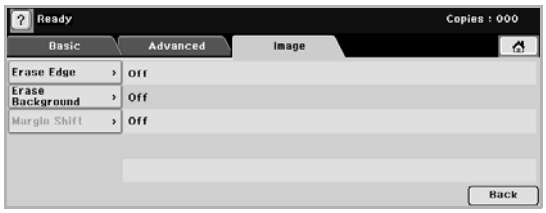

- **Erase Edge**: allows you to erase punch holes, staple marks, fold creases along any of four edges of documents. (Page 4.6)
- **Erase Background**: prints an image without its background. (Page 4.6)
- **Margin Shift**: creates a binding edge for the document. (Page 4.7)

Copying originals

This process is the normal and usual way to copy your originals.

1 Press **Copy** from the main screen.

2 Place originals face up into the DADF. Or you can use the scanner glass with a single original document face down.

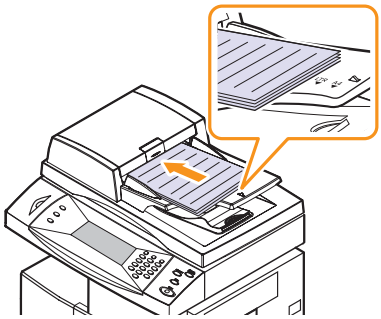

3 Adjust the settings for each copy such as **Original Size**, **Reduce/ Enlarge**, **Duplex** and so on. (Page 4.2)

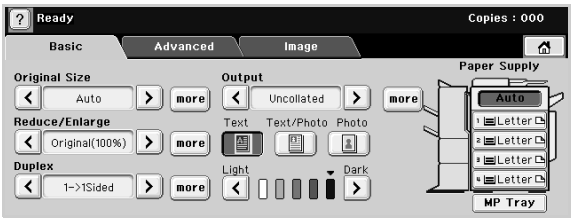

4 Select the tray by pressing the appropriate tray on screen.

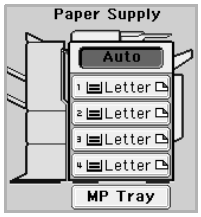

5 Enter the number of copies using the number keypad, if necessary.

6 Press **Start** on the control panel to begin copying.

Note

To cancel the current copy job, press **Stop/Clear** on the control panel.

Changing the settings for each copy

On **Basic** tab of **Copy** screen, user can select copy features before the start of copy.

Note

The setting of on **Basic** tab is only for each copy, it means that the setting does not apply for the next copy job. After finishing the current copy job, the machine automatically resumes to the default settings. (Page 4.7)

Changing the size of originals

Press **Basic** tab > **Original Size**, then use Right/Left arrows to set the original size.

Press **more** to see the detail values.

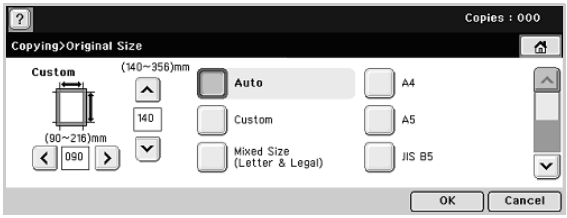

- **Custom**: select the scanning region of the original. Press the cardinal point arrows to set the size.
- **Auto**: the machine automatically detects and adjusts the size of originals.
- Other preset values: provides user to select commonly used values easily.

Reducing or enlarging the copy

Press **Basic** tab > **Reduce/Enlarge**, then use Right/Left arrows to reduce or enlarge an image on the paper. Press **more** to see the detail values.

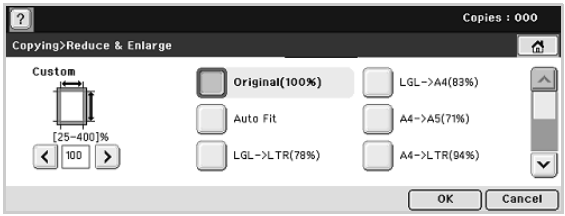

- **Original(100%)**: prints texts or images as the same size as originals.
- **Auto Fit**: reduces or enlarges an image of originals based on the size of the output paper.
- Other preset values: provides user to select commonly used values easily.

Copying on both sides of originals (Duplex)

Press **Basic** tab > **Duplex**, then use Right/Left arrows to select **Duplex** value. Press **more** to see the detail values.

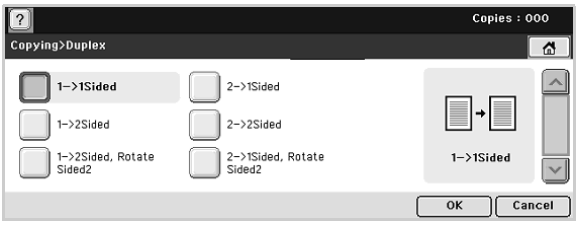

- **1->1Sided**: scans one side of a original and prints one side of a paper, this function produce exactly the same print out from originals.
- **1->2Sided**: scans one side of originals and prints them on both sides of paper.

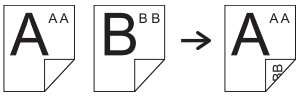

- **1->2Sided, Rotate Sided2**: scans one side of originals and prints them on both sides of paper, but the information on back side of the print out are rotated 180°.

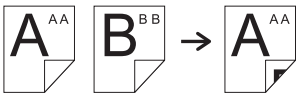

- **2->1Sided**: scans both sides of originals and prints each of them on separate papers.

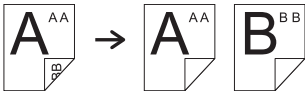

- **2->2Sided**: scans both sides of the original and prints them on both sides of papers, this function produce exactly the same print out from originals.

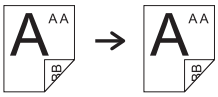

- **2->1Sided, Rotate Sided2** scans both sides of original and prints one of them on separate papers, but the information on back side of the print out are rotated 180°.

Deciding the form of copy output (Collated / Staple)

Note

This option is available with an optional stacker & stapler. (Page x.x)

Press **Basic** tab > **Output**, then use Right/Left arrows to select collated or stapled. Press **more** to see the detail values.

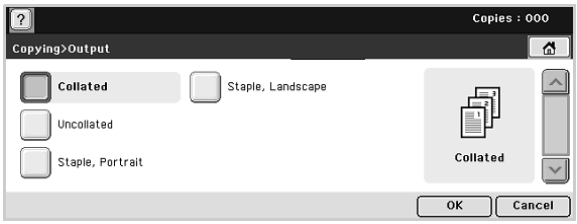

- **Collated**: prints output in sets to match the sequence of originals.

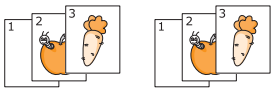

- **Uncollated**: prints output sorted into stacks of individual pages.

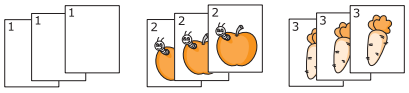

- **Staple, Portrait**: adds a single staple to all your portrait-oriented output.

- **Staple, Landscape**: adds a single staple to all your landscape-oriented output.

Selecting a original type (Text/Photo)

Press **Basic** tab and select original type.

- **Text**: User for originals containing mostly text.

- **Text/Photo**: Use for originals with mixed text and photographs.
- **Photo**: Use when the originals are photographs.

Changing the darkness

There are 5 levels of darkness. Use Right/Left arrows to change the darkness of the output.

Using special copy features

On **Advanced** tab or **Image** tab of **Copy** screen, you can select copy features in depth.

ID card copying

The machine prints one side of the original on the upper half of the paper and the other side on the lower half without reducing the size of the original. This feature is helpful for copying a small-sized item, such as a name card.

1 Place a single original face down on the scanner glass. (Page 3.1)

2 Press **Copy** from **Main** screen.

3 Press **Advanced** tab > **ID Copy**.

4 Press **Start** on the control panel

Then the machine starts scanning the front side.

5 Place back side of original and press **Start** on the control panel to begin copying.

Note
If the original is larger than the printable area, some portions may not be printed.

2-up or 4-up copying (N-Up)

The machine reduces the size of original images and prints 2 or 4 page onto one sheet of paper.

1 Load originals face up in the DADF. (Page 3.1)

Note
Originals must be loaded in DADF to use this feature.

2 Press **Copy** from **Main** screen.

3 Press **Advanced** tab > **N-Up**.

4 Select **Off**, **2Up**, or **4Up**.

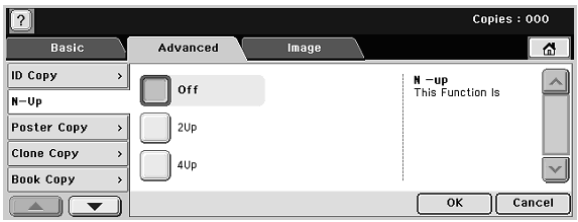

- **Off**: copies an original onto one sheet of paper.
- **2Up**: copies two separate originals onto one sheet of paper.
- **4Up**: copies four separate originals onto one sheet of paper.

5 Press **Start** on the control panel.

Note
You can not adjust the copy size using the **Reduce/Enlarge** for using **N-Up** feature.

Poster copying

Your original is divided into 9 portions. You can paste the printed pages together to make one poster-sized document. This copy feature is available only when you place originals on the scanner glass. Each portion is scanned and printed on by one in the following order.

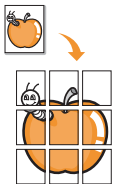

1 Place a single original face down on the scanner glass. (Page 3.1)

2 Press **Copy** from **Main** screen.

3 Press **Advanced** tab > **Poster Copy**.

4 Press **On** to activate this feature.

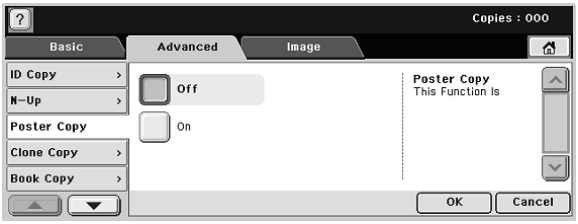

5 Press **OK** to start the job.

Clone copying

The machine prints multiple original images on a single page. The number of images is automatically determined by the original image and paper size.

1 Place a single original face down on the scanner glass. (Page 3.1)

2 Press **Copy** from **Main** screen.

3 Press **Advanced** tab > **Clone Copy**.

4 Press **On** to activate this feature.

5 Press **OK** to start the job.

Book copying

Use this feature to copy a book. If the book is too thick, lift the cover until its hinges are caught by the stopper and then close the cover. If the book or magazine is thicker than 30 mm, start copying with the cover open.

1 Place a single original face down on the scanner glass. (Page 3.1)

2 Press **Copy** from **Main** screen.

3 Press **Advanced** tab > **Book Copy**.

4 Press the binding option.

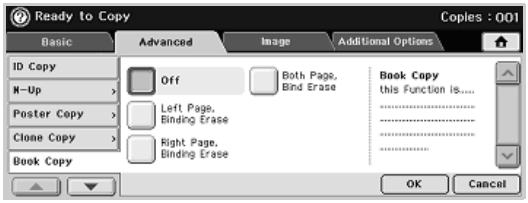

- **Off**: disables this feature.
- **Left Page, Binding Erase**: prints left page of the book.
- **Right Page, Binding Erase**: prints right page of the book.
- **Both Pages, Binding Erase**: prints both pages of the book.

5 Press **OK** to start the job.

Booklet copying

The machine prints 2-sided automatically, which, when folded, produces a booklet with all the pages in the correct sequence. The machine will also reduce and correctly position each images to fit on the selected paper.

1 Load originals face up in the DADF. (Page 3.1)

2 Press **Copy** from **Main** screen.

3 Press **Advanced** tab > **Booklet**.

4 Press **On** to activate this feature.

5 Press **OK** to start the job.

Covers copying

Covers must be the same size and orientation as the main body of the job.

1 Load originals face up in the DADF. (Page 3.1)

2 Press **Copy** from **Main** screen.

3 Press **Advanced** tab > **Covers**.

4 Press **On** to use this feature. And select detail settings of each option.

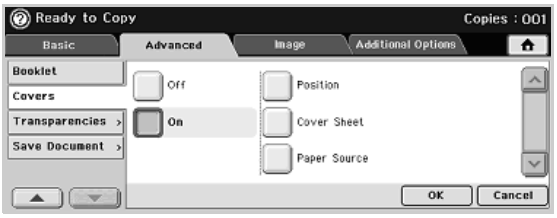

- **Position**: selects whether the cover is for front, back, or both.
- **Cover Sheet**: selects cover is 1sided, 2sided, or blank paper.
- **Paper Source**: select the paper tray.

5 Press **OK** to start the job.

Transparencies copying

When you prepare transparencies for the presentation, use this feature to copy the information.

1 Load transparencies in the multi-purpose tray.

(Insert the picture)

2 Load originals face up in DADF. (Page 3.1)

3 Press **Copy** from **Main** screen.

4 Press **Advanced** tab > **Transparencies**.

5 Select Transparencies option.

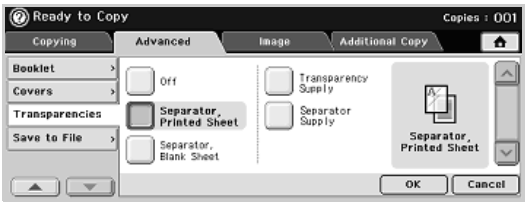

- **Off**: disables this feature.
- **Separator, Printed Sheet**: places the same image on the divider sheets as printed on the transparency.
- **Separator, Blank Sheet**: places a blank sheet between each transparency.
- **Transparency Supply**: sets that the transparencies can only be fed from the bypass tray.
- **Separator Supply**: specifies the tray from which the machine needs to use the separator stock.

6 Select tray option.

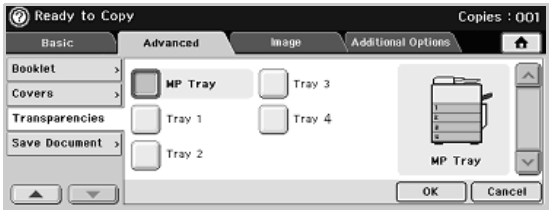

7 Press **OK** to start the job.

Erasing edge

You can copy the original without certain edge or margin of it.

1 Place a single original face down on the scanner glass. (Page 3.1)

2 Press **Copy** from **Main** screen.

3 Press **Image** tab > **Erase Edge**.

4 Select appropriate option.

- **Off**: disables this feature.
- **Border Erase**: erases equal amounts on all edges of the copies.
- **Small Original Erase**: erases 0.25" (6mm) from the edge of the document.
- **Hole Punch Erase**: erases hole punch marks from the left and right edge of the document.
- **Book Center and Edges Erase**: erases shadows of a binding or book edge from the left and right edge of the document.

5 Press **OK** to start the job.

Erasing background images

This feature is helpful when copying originals containing color in the background, such as a newspaper or a catalog.

1 Load originals face up in the DADF. Or place a single original face down on the scanner glass.

2 Press **Copy** from **Main** screen.

3 Press **Image** tab > **Erase Background**.

4 Press **On** to activate this feature.

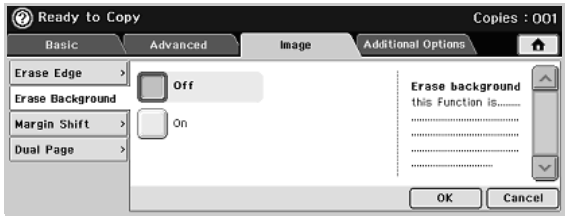

5 Press **OK** to start the job.

Shifting margin

You can creates a binding edge for the document..

1 Place a single original face down on the scanner glass. (Page 3.1)

2 Press **Copy** from **Main** screen.

3 Press **Image** tab > **Margin Shift**

4 Select **Margin Shift** option.

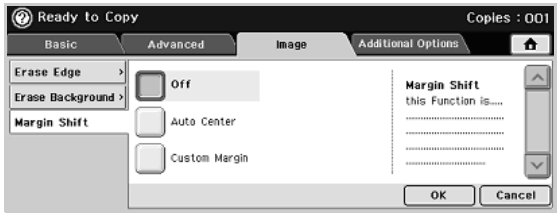

- **Off**: disables this feature.
- **Auto Center**: automatically copies in the center of the paper.
- **Custom Margin**: adjusts the margin by user, enter left, right, top, bottom margin using four direction arrows.

5 Press **OK** to start the job.

Setting copy timeout

Changing the default settings for copy job

You can set the default options for copy, fax, email, scan and paper at once.

1 Press **Machine Setup** button in the control panel.

2 Press **Admin Setting** > **General** tab > **Default Settings** > **Default Option**.

3 Press **Copy**.

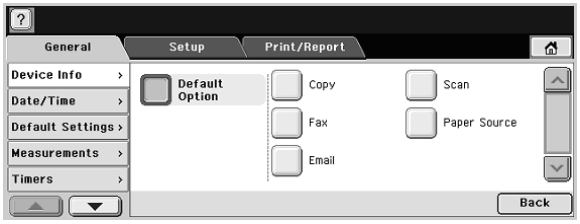

4 Press option which you want to change the default setting. (Example : Darkness)

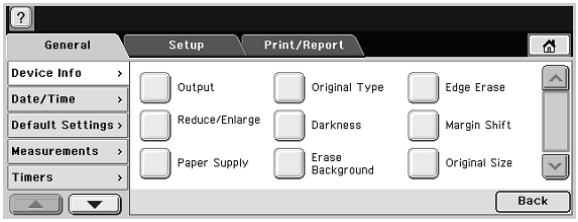

5 Select the default value.

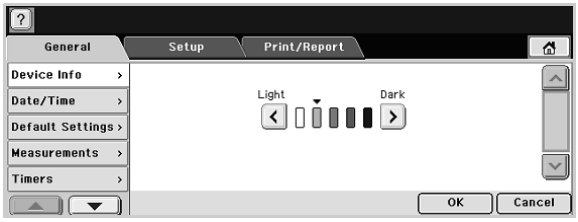

6 Press **OK**.

5 Faxing (Optional)

This chapter gives you information about using your machine as a fax machine.

This chapter includes:

Preparing for faxing

Understanding the Fax screen
- **Basic tab**
- **Advanced tab**
- **Image tab**

Sending a fax
- **Sending a fax**
- **Sending a fax with automatic redialing**
- **Sending a fax redialing the last number**
- **Delaying a fax sending**
- **Sending a priority fax**
- **Forwarding received/sent fax to another fax machine or e-mail address**
- **Changing sending mode**

Receiving a fax
- **Setting the receive mode (Tel, Fax, Answering Machine/Fax)**
- **Receiving manually using an extension telephone**
- **Receiving faxes using DRPD mode**
- **Receiving in secure receiving mode**
- **Printing received faxes on both sides of paper**
- **Changing receiving mode**

Adjusting the document settings
- **Duplex**
- **Resolution**
- **Original Type**
- **Darkness**
- **Erase Background**
- **Color**

Setting up a fax phonebook
- **Storing individual fax numbers (Speed Dial Number)**
- **Storing Group fax numbers**
- **Setting up a fax phonebook using SynchThru Web Service**

Using the polling
- **Storing the originals for polling**
- **Polling a remote fax immediate polling**
- **Polling from remote mail box**

Using the mail box
- **Creating the Mailbox**
- **Storing the originals in the mail box**
- **Send to remote mail box**

Preparing for faxing

Before you send or receive a fax, you need to connect the telephone cable(s) to appropriate port(s). Refer to the Quick Install Guide to connect them. The method of making a telephone connection is different from one country to another.

Note
If you want to add fax feature to the machine, check the option lists (Page 11.1) and contact the purchasing point to order. When you purchase a fax kit, install the fax kit by following the steps of the Quick Installation Guide which enclosed in the fax kit.

Understanding the Fax screen

To use fax feature, press the **Fax** on **Main** screen. If the screen displays other menu, press ([⌂]) to go to Main screen.

Note
If your machine does not support fax feature, fax icon on Main screen does not appear.

Basic tab

- **Fax number input area**: enters the recipient's fax number using the number keypad on the control panel. If you stored fax address, press Individual or Group. (Page x.x)
- **Address**: Stores frequently used fax numbers directly from your machine or from your computer through SynchThru Web Service (Page 5.6). And you can input the recipient's addresses just by pressing stored addresses. Individual displays each fax numbers, since Group shows group name which has several fax umbers stored.

- **Duplex**: selects the option whether the machine send fax of one side of original paper (1Sided), both sides of original paper (2Sided).
- **Resolution**: adjusts resolution options.
- **Add No**: moves the cursor to the next input line.
- ← : removes the latest entered fax number character.
- C : removes the fax numbers within one input line where the cursor blinks.
- **Remove**: removes the fax numbers which are below from the cursor blinks.
- **Remove All**: removes all the fax numbers in the input area.

Advanced tab

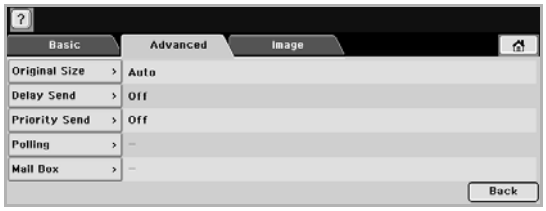

- **Original Size**: selects the size of original document. Press OK to update current setting.
- **Delay Send**: sets the machine to send a fax at a later time when you will not be present. (Page x.x)
- **Priority Send**: sends a urgent fax ahead of reserved operations. (Page x.x)
- **Polling**: uses when receiver requests the document to be faxed at sender's absence. Prior to this, sender must store the originals into the machine for polling function. (Page 5.7)
- **Mail Box**: allows storing a received fax in the machine memory or the originals which is ready to poll. You can use a mailbox on the same machine you are using, or a mailbox set up on a remote machine. Each mailbox has a corresponding mailbox number, name and password. (Page 5.8)
- **Back**: goes to Basic tab.

Image tab

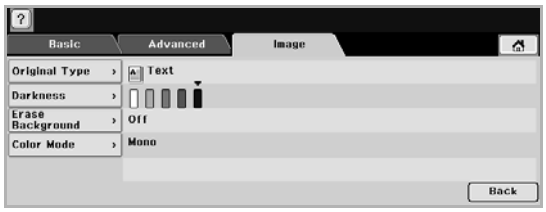

- **Original Type**: enhances the quality of fax based on the type of original document being scanned. (Page 5.5)
- **Darkness**: adjusts the lightness or darkness of the fax. (Page x.x)
- **Erase Background**: reduces the dark background or paper pattern such as newspaper originals. (Page x.x)
- **Color Mode**: selects whether the user sends the fax in mono or color. (Page x.x)

Sending a fax

This part explains how to send a fax, and the special sending methods.

Sending a fax

1 Press **Fax** from the **Main** screen.

2 Place the originals face up into the DADF. Or you can use the scanner glass with a single original document faced down.

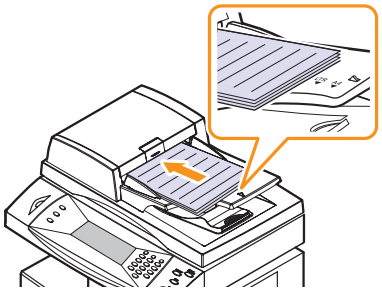

3 Adjust the document settings in Image tab.

4 Select **Duplex** and **Resolution** options in **Basic** tab.

Note
If you want to send a fax manually, press **On Hook Dial**. Then you can hear a dial tone.

5 When the cursor blinks in the input line, enter the fax number with number keypad on the control panel. Or use Address on the right side, if you stored frequently used fax numbers.

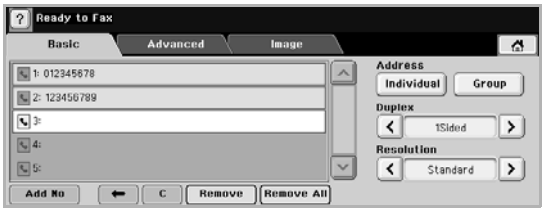

Note
To add number, press **Add No**.

6 Press **Start** on the control panel.

Note
When you want to cancel a fax job, press **Stop** at any time while sending.

Sending a fax with automatic redialing

When the number you have dialed is busy or there is no answer, the machine automatically redials the number every three minutes, up to seven times according to the factory default settings.

When LCD shows **Retry redial?**, press **OK** to redial the number without waiting. To cancel the automatic redialing, press **Stop**.

To change the time interval between redials and the number of redial attempts, refer to next steps.

1 Press **Machine Setup** on the Control Panel.

2 Select **Admin Setting**. Login message pops up, then enter password and press **OK**.

3 Press **Setup** tab > **Fax Setup**.

4 Press down arrow to down the screen.

5 Press **Redial**.

6 Select **Redial Time Interval** and **Redial Attempts**.

7 Press **OK**.

Sending a fax redialing the last number

1 Press **Redial/Pause** on the control panel.

2 Place the originals face up into the DADF, the machine automatically begins to send.

3 Press **Start** on the control panel.

Delaying a fax sending

1 Press **Fax** from the **Main** screen.

2 Place the originals face up into the DADF.

3 Adjust the document settings in **Image** tab.

4 Select **Duplex** and **Resolution** options in **Basic** tab.

5 Press **Advanced** tab > **Delay Send**.

6 Press **On**.

7 Enter the name of job in Job Name with the popped up keyboard.

8 Enter **Start Time** using Right/Left arrows. **Start Time** is the sending time of the fax.

Note
Start Time is the specific time you want the fax to be sent. You can set **Start Time** within 24 hours basis.

9 Press **OK** to start storing the scanned original data into memory.

Note
To cancel delaying a fax, press **Off**.

Sending a priority fax

This function is used when a high priority fax need to be sent ahead of reserved operations.

1 Press **Fax** from the **Main** screen.

2 Place the originals face up into the DADF.

3 Adjust the document settings in **Image** tab.

4 Select **Duplex** and **Resolution** options in **Basic** tab.

5 Press **Advanced** tab > **Priority Send**.

6 Press **OK** to start the urgent fax job.

Forwarding received/sent fax to another fax machine or e-mail address

You can forward your incoming and outgoing faxes to another fax machine or email address.

1 Press **Machine Setup** on the Control Panel.

2 Select **Admin Setting**. Login message pops up, then enter password and press **OK**.

3 Press **Setup** tab > **Fax Setup**.

4 Press Up/Down arrow to go to the next page.

5 Press **Fax Forward Settings**.

6 Press **Type** and select what type for forwarding the fax. If you want to send a fax via email, select **Email**.

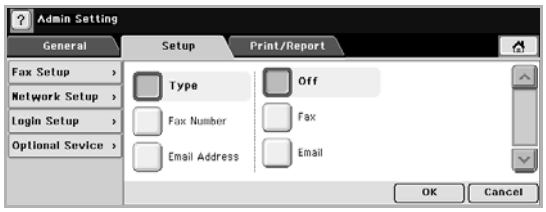

7 Enter fax number or email address according to the forwarding type you selected in prior step.

8 Press **OK**.

Changing sending mode

Receiving a fax

This part explains how to receive a fax, and the special receiving methods.

Setting the receive mode (Tel, Fax, Answering Machine/Fax)

1 Press **Machine Setup** on the Control Panel.

2 Select **Admin Setting**. Login message pops up, then enter password and press **OK**.

3 Press **Setup** tab > **Fax Setup** > **Receive Mode**.

4 TBD ?????

Receiving manually using an extension telephone

This feature works best when you are using an extension telephone connected to the EXT socket on the back of your machine. You can receive a fax from someone you are talking to on the extension telephone, without going to the fax machine.

When you receive a call on the extension phone and hear fax tones, press the keys *9* on the extension phone. The machine receives the fax.

Press the buttons slowly in sequence. If you still hear the fax tone from the remote machine, try pressing *9* once again.

To change the *9* to, for example, *3*, follow next steps.

1 Press **Machine Setup** on the Control Panel.

2 Select **Admin Setting**. Login message pops up, then enter password and press **OK**.

3 Press **Setup** tab > **Fax Setup** > **Remote Code**.

4 Select **On**.

5 Enter the number 3 using the number keypad.

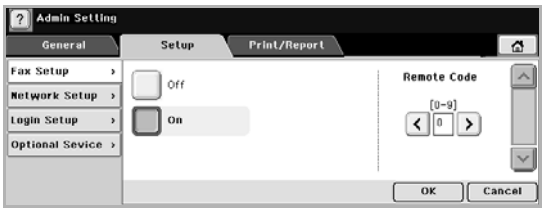

6 Press **OK**.

Receiving faxes using DRPD mode

TBD??????

Receiving in secure receiving mode

You may need to prevent your received faxes from being accessed by unauthorized people. You can turn on secure receiving mode to restrict printing of received faxes when the machine is unattended. In secure receiving mode, all incoming faxes go into memory. When the mode is deactivated, then stored faxes are printed. Where??????

1 Press **Machine Setup** on the Control Panel.

2 Select **Admin Setting**. Login message pops up, then enter password and press **OK**.

3 Press **Setup** tab > **Fax Setup** > **Secure Receive**.

4 Select **On**.

Note
To deactivate Secure Receive feature, press **Off**.

Printing received faxes on both sides of paper

TBD ?????

Changing receiving mode

TBD ?????

Adjusting the document settings

Before sending a fax, you can adjust the document settings, such as resolution, darkness, color, duplex and so forth. Refer to explanation of this part.

Duplex

This function is used especially when the originals for faxing are printed two-sided. User can select the option whether the machine send fax of one side of paper or both sides of paper.

This option is in **Fax** screen. Press **Fax** > **Basic** tab > **Duplex**. Use right/left arrow to toggle the values.

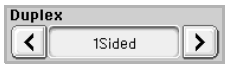

- **1Sided**: is for the originals that are printed on one side only.
- **2Sided**: is for the originals that are printed on both sides.

Resolution

Changing the resolution setting affects the appearance of the receiving document.

This option is in **Fax** screen. Press **Fax** > **Basic** tab > **Resolution**. Use right/left arrow to toggle the values.

- **Standard**: is recommended for text documents. But this option will reduce the communications time.
- **Fine**: is recommended for original document containing small characters, thin lines or printed using a dot-matrix printer.
- **Super Fine**: is recommended for original document containing extremely fine detail, this option is enabled only if the receiving machine also supports the **Super Fine** resolution.

Original Type

You can set the original document type to enhance the quality of a document being scanned. Scanning is essential and prior job for sending a fax.

This option is in **Fax** screen. Press **Fax** > **Image** tab > **Original Type**. Press the appropriate option with your finger in screen then, press **OK**.

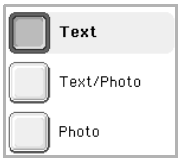

- **Text**: is for the originals that are with text or line art.
- **Text/Photo**: is for the originals that are with text and photographs together.
- **Photo**: is for the originals that are continuous tone photographs.

Darkness

You can select the degree of darkness of the original document.

This option is in **Fax** screen. Press **Fax** > **Image** tab > **Darkness**. Press right arrow to enhance the darkness degree then, press **OK**.

Erase Background

You can lighten, reduce or eliminate the dark background from scanning colored paper or newspaper originals.

This option is in **Fax** screen. Press **Fax** > **Image** tab > **Erase Background**. Press **On** to activate this function then, press **OK**.

Note
Erase Background is disabled if the **Original Type** is set to **Photo**.

Color

You can transmit a fax in color using this feature.

This option is in **Fax** screen. Press **Fax** > **Image** tab > **Color Mode**.

Press **Color** then, **OK**.

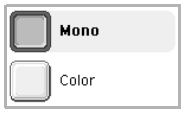

- **Mono**: transmits a fax in black and white image.
- **Color**: transmits a fax in color image.

Setting up a fax phonebook

You can set up Phonebook with the fax numbers used most frequently. There are two options, Individual and Group. The fax numbers, which are stored in Individual, work as Speed Dial No.

Storing individual fax numbers (Speed Dial Number)

1 Press **Fax** > **Basic** tab > **Individual**.

2 Press **New**.

Note
If you want to change the fax number or **ID**, press **Edit**.

3 Enter the name of fax number in **ID** area with popped up keyboard, and fax number in **Fax No.** area with number keypad on the control panel. **Speed Dial No.** is automatically filled with first unused number.

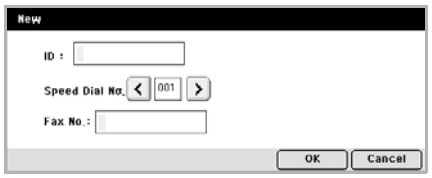

4 Press **OK**.

Note
Speed Dial No. allows user to enter easily the frequently used fax numbers. User only needs to press the **Speed Dial No.** using the keypad. If the fax number is stored as the **Speed Dial No.** 069, the press 0, 6 and 9 (long press).

Storing Group fax numbers

TBD??????

1 Press **Fax** > **Basic** tab > **Group**.

2 Press **New**.

3 Enter the name in **Group ID** area with popped up keyboard. **Group No.** is automatically filled with first unused number.

4 Press the insert area of **New** window as below.

Individual fax number list shows.

5 Select fax numbers from the individual list, press **Add**.

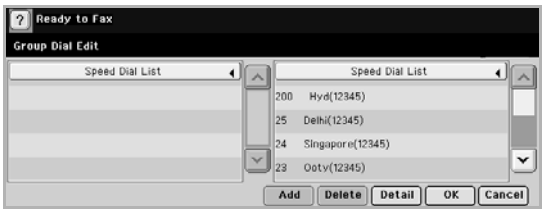

6 Press **OK** in New window to save the numbers.

Setting up a fax phonebook using SynchThru Web Service

You can store fax numbers conveniently from the networked computer using **SynchThru Web Service**.

1 Open the web browser in your computer.

2 Enter IP address of the machine, then **SynchThru Web Service** shows.

(example) http://10.195.xxx.xxx

3 Press ??????????????? menu to enter fax numbers.

Using the polling

Polling is used when one fax machine requests another to send a document. This is useful when the person with the original document is not in the office. The person, who wants to receive the document, calls the machine holding the original and requests that the document be sent. In other words, it "polls" the machine holding the original.

Note
To use this feature, the sender and receiver, both must have polling feature.

The polling process is as below.

1 Sender stores the originals to the machine. (Page x.x)

2 Sender Informs receiver the **Passcode**.

3 Receiver dials the fax number and enters the **Passcode**. (Page x.x)

4 Receiver presses **Start** to receive the stored fax.

Storing the originals for polling

1 Press **Fax** from the **Main** screen.

2 Place the originals face up into the DADF. Or you can use the scanner glass with a single original document faced down.

3 Adjust the document settings in **Image** tab.

4 Select **Duplex** and **Resolution** options in **Basic** tab.

5 Press **Advanced** tab > **Polling** > **Store For Polling** > **Store**.

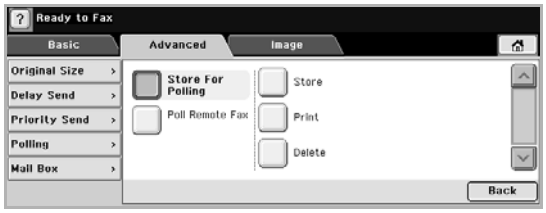

6 Enter **Passcode** (four digit number).

Note
If you want to use the Mail Box, refer to Storing the originals in the mail box. (Page 5.8)

7 Press **OK** to start the storing the originals for polling.

8 Inform the receiver the Passcode.

Notes

- **Printing polling document**
  In **Main** screen, press **Fax** > **Advanced** tab > **Polling** > **Store For Polling** > **Print**, and enter the **Passcode** to print the polling documents.
- **Deleting polling document**
  Press **Main** screen > **Fax** > **Advanced** tab > **Polling** > **Store For Polling** > **Delete**, and enter the **Passcode** to delete all the polling documents.

Polling a remote fax immediate polling

This option allows you to contact a remote fax machine to receive faxes which is stored in the remote machine.

1 Press **Fax** from the **Main** screen.

2 Press **Advanced** tab > **Polling** > **Poll Remote Fax** > **Immediate Polling**.

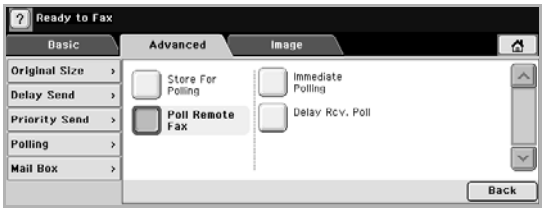

Note
User can use Delay RCV. Poll to poll the fax at certain time within 24 hours.

3 Enter **Passcode** and destination fax number using the number keypad on the control panel.

4 Press **OK**.

Polling from remote mail box

This option allows you to contact a remote fax machine to receive faxes which is stored in the mailbox on the remote machine.

1 Press **Fax** from the **Main** screen.

2 Press **Advanced** tab > **Mail Box** > **Poll from Remote**.

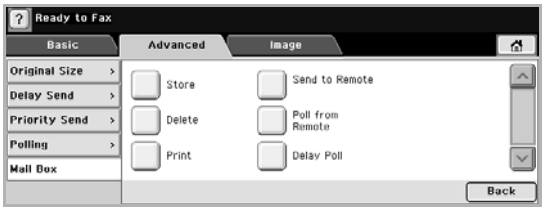

3 Enter **Remote Fax No.**, **Mailbox No.**, and **Passcode**.

4 Press **OK**.

Using the mail box

You can store the original data in Mailbox. But before you store the originals, the Mailbox must exist.

Creating the Mailbox

1 Press **Machine Setup** on the Control Panel.

2 Select **Admin Setting**. Login message pops up, then enter password and press **OK**.

3 Press **Setup** tab > **Fax Setup**.

4 Press down arrow to move to another screen.

5 Press **Mailbox Setup**. Then the screen displays **Mailbox List**.

6 Select Mailbox on the **Mailbox List**.

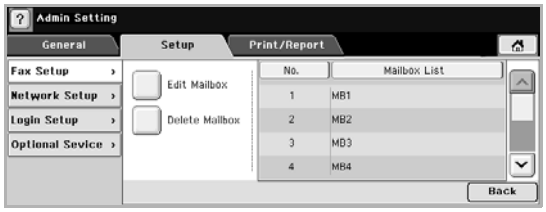

7 Press **Edit Mailbox**.

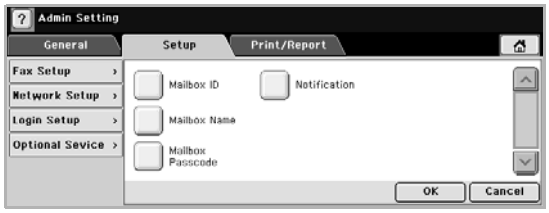

8 Press **Mailbox ID** and enter TBD?????.

9 Enter **Mailbox Name** with the popped keyboard, **Mailbox Passcode** with the number keypad.

10 Set **Notification** option to **On**, when you want to be notified after a fax received into Mailbox.

11 Press **OK**.

Storing the originals in the mail box

Since you created the mailbox, you can store the originals into it.

1 Press **Fax** from the **Main** screen.

2 Place the originals face up into the DADF. Or you can use the scanner glass with a single original document faced down.

3 Adjust the document settings in **Image** tab.

4 Select **Duplex** and **Resolution** options in **Basic** tab.

5 Press **Advanced** tab >**Mail Box** > **Store**.

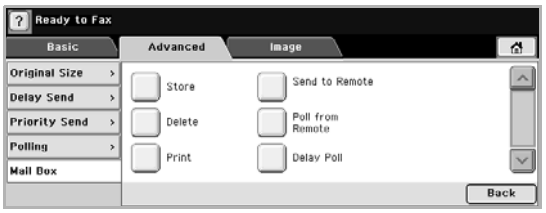

6 Enter **Mailbox No.** and **Passcode**.

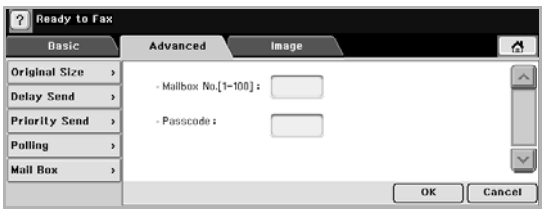

7 Press **OK**.

Notes

- **Deleting the data of the certain mail box**
  Press **Fax** > **Advanced** tab > **Mail Box** > **Delete**, enter **Mailbox No.** and **Passcode**, and press **OK**. When the confirmation window appears press **Yes** to complete the job.
- **Printing a mail box**
  Press **Fax** > **Advanced** tab > **Mail Box** > **Print**, enter **Mailbox No.** and **Passcode**, and press **OK**.

Send to remote mail box

To fax and store the originals to recipient's Mail Box of the machine, you can use Send to Remote feature.

1 Press **Fax** from the **Main** screen.

2 Place the originals face up into the DADF. Or you can use the scanner glass with a single original document faced down.

3 Adjust the document settings in **Image** tab.

4 Select **Duplex** and **Resolution** options in **Basic** tab.

5 Press **Advanced** tab >**Mail Box** > **Send to Remote**.

6 Enter **Remote Fax No.**, **Mailbox No.**, and **Passcode**.

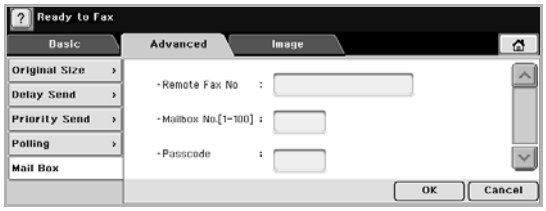

7 Press **OK**.

6 Scanning

Scanning with your machine lets you turn hard copy originals into digital files that can be stored on your computer or be sent to several destinations. Then you can email the files, upload them to website, or print them out.

This chapter explains information about the method of scanning and the ways to sending the scanned output. There are two ways to send the scanned file in brief. One is called Scan to E-mail, and the other one is called Network Scan.

- Scan to E-mail: sends the file to several destinations from the machine, using e-mail, ftp and SMB.
- Network Scan: scans an image from the machine via the Network Scan program which installed in your networked computer.

This chapter includes:

- **Preparing for Scan to E-mail**
- **Understanding the Scan to E-mail LCD**
- **Scanning basics**
- **Scanning to an application using a local connection**
- **Scanning using a network connection**
- **Changing the settings for each scan job**
- **Changing the default scan settings**
- **Setting up Address Book**
- **Scan on both sides of paper**

Preparing for Scan to E-mail

Before you use scan the originals and send it to e-mail, you need to configure the following settings.

Setting the machine's network

Sending a scanned file to several destinations as an e-mail attachment

1 Place the originals face up into the feeder.

(Insert artwork)

Note
You can use the scanner glass for single paper. In that case, the original should face down and aligned with the tip of the top left of the document glass.

2 Go to **Scan to E-mail** from the main menu screen. If the screen displays other menu, press **Main** ( ).

3 Set the scan features following the information below.

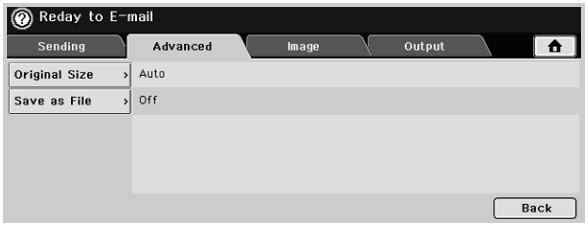

- Press **Advanced** tab to set the original size.
- Press **Image** tab to set the original type, adjust the color, darkness, and erase the unclear paper pattern, etc.
- Press **Output** tab to adjust the quality and the file format of scanned output.

4 Press the **Basic** tab to enter the email addresses.

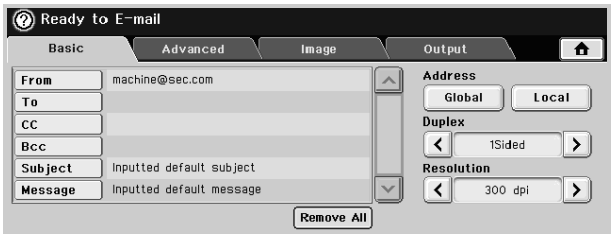

- **From**: Enter sender's e-mail address. Touch the input area, then the keyboard pops up on the screen. (See page x.x for more information about keyboard)
- **To**/**CC**/**Bcc**: Enter recipient's e-mail addresses by manually entering the addresses, or by pressing **Global** or **Local** in Address. **Global** or **Local** addresses are pre-loaded address lists on your server or machine. (See page x.x for more information about Storing e-mail addresses.)
  Next process is an example.

a. Press **Local**.

b. Press **Group** tab.

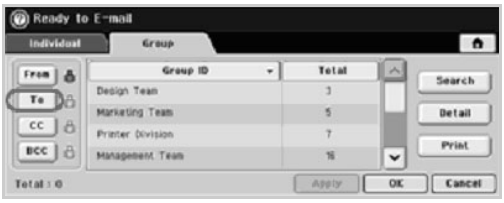

c. Select one among **From**, **To**, **CC**, and **Bcc**.

d. Press **Group** that you stored.

5 When the scan setting is done, press Start button to scan and send the file to the destination.

Understanding the Scan to E-mail LCD

When you press the **Scan to E-mail** icon on LCD main menu, the **Email** menu appears. In **Scan to E-mail** menu, you can set the scan options and send the output to e-mail, ftp, or SMB.

Basic tab

1	**Input Area**

- **Input Area**: You can input sender's address, receiver's addresses (To, CC, Bcc), subject, and message. The message's maximum size is 1,000 bytes. Once you click the **Input Area**, the keyboard appears automatically for inserting characters, see page x.x for detail information.
- **Remove All**: Erases all the input within the input area.
- **Address**: Stores addresses used frequently and input the recipient's addresses just by clicking stored addresses.
  - **Global** - Addresses stored from Web-UI.
  - **Local** - Addresses stored from the machine.
- **Duplex**: selects the option which scans on both sides of paper or one side of paper.
- **Resolution**: selects the scanning resolution value.

Advanced tab

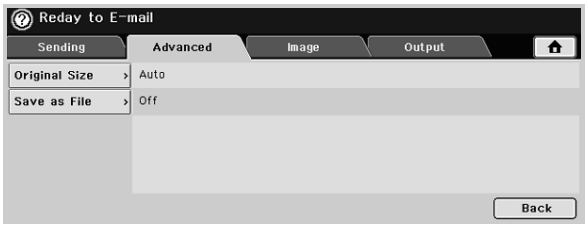

- **Original Size**: sets the originals in certain size.
- **Back**: returns to the E-mail main menu.

Image tab

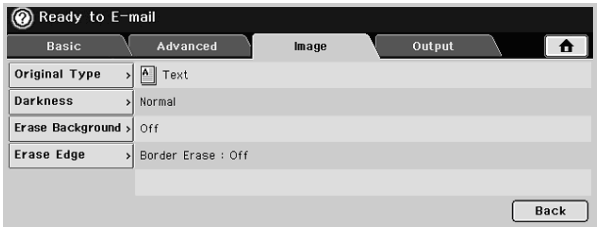

- **Original Type**: Input whether the original is text or photo.
- **Color**: Adjusts the color options of the scan output.
- **Darkness**: Adjusts the degree of darkness of the scan output.
- **Erase Background**: Erases background like paper pattern.
- **Scan to Edge**: Scans originals including the edge of them.
- **Back**: returns to the E-mail main menu.

Output tab

- **Quality**: adjust the display quality of the scan output.
- **File Format**: selects the file format of the scan output.
- **Back**: returns to the E-mail main menu.

Scanning basics

Your machine offers the following ways to scan an image using a local connection:

- Via one of the preset imaging applications. Scanning an image launches the selected application, enabling you to control the scanning process. See the next section.
- Via the **SmarThru™** program supplied with your machine. Scanning an image launches **SmarThru™** and enables you to control the scanning process.
- Via the Windows Images Acquisition (WIA) driver. See the **Software Section**.

Also, you can send scanned images to several destinations using a network connection:

- To your networked computer via the **Network Scan** program. You can scan an image from the machine, if network-connected, to the computer where the **Network Scan** program is running.
- To Email. You can send the scanned image as an attachment to an email. See page 6.5.
- To an FTP file server: You can scan an image and upload it to an FTP server. See page 6.6.
- To a computer networked via SMB (NetBEUI)[a] protocol: You can scan an image and send it to a shared folder on an SMB server. See page 6.6.

Scanning to an application using a local connection

1 Make sure that your machine and computer are turned on and properly connected to each other.

2 Load originals face up into the DADF, or place a single original face down on the scanner glass.

For details about loading an original, see page 3.1.

3 Press **Scan/Email**.

Ready to Scan appears on the top line of the display.

4 Press the **Scroll** buttons until **Scan to Appl.** appears on the bottom line of the display and press **OK**.

5 Press the **Scroll** buttons until the application you want to use appears and press **OK**.

- **Microsoft Paint**: Sends the scanned image to Microsoft Paint.
- **Email**: Sends the scanned image to your default email program on your computer. A new message window opens with the image attached.
- **My Documents**: Saves the scanned image in the default folder, **My Documents**, on your computer.
- **SmarThru**: Sends the scanned image to **SmarThru™**, installed with the printer driver.
- **OCR**: Sends the scanned image to the OCR program for text recognition.

Note
You can add more TWAIN-compliant software for scanning, such as Adobe Photoshop Deluxe, or Adobe Photoshop, from the **Printer Settings Utility**. See the **Software Section**.

6 On the selected application, adjust the scan settings and begin scanning. For details, please refer to the application user's guide.

Scanning using a network connection

If you have connected your machine to a network and set up network parameters correctly, you can scan and send images over the network.

Preparing for network scanning

Before using your machine's network scanning features, you need to configure the following settings depending on your scan destination:

- Adding the machine to the Network Scan program for scanning to a network client
- Registering as an authorized user for scanning to Email, FTP, or SMB
- Setting up an account for scanning to Email
- Setting up FTP servers for scanning to FTP
- Setting up SMB servers for scanning to SMB

Adding the machine to the Network Scan program

First, install the **Network Scan** program. See the **Software Section**.

To scan images from your machine to your computer through the network, you need to register the machine as an authorized network scanner in the **Network Scan** program.

1 In Windows, select **Start** → **Programs** → **Samsung Network Printer Utilities** → **Network Scan** → **Network Scan**.

The **Samsung Network Scan Manager** window opens.

2 Click the **Add Device** button or double-click the **Add Device** icon.

3 Click **Next**.

4 Select **Browse for a scanner. (recommended)**, or select **Connect to this scanner.** and enter the IP address of your machine.

5 Click **Next**.

A list of the scanners on your network appears.

a. A network protocol provided by Microsoft Corporation for Windows network systems.

6 Select your machine from the list and enter a name, user ID, and PIN (Personal Identification Number) for the machine.

Notes

- For the scanner name, the model name of your machine is automatically entered, but can be changed.
- You can enter an ID of up to 8 characters. The first character must be a letter.
- The PIN must be 4 digits.

7 Click **Next**.

8 Click **Finish**.

Your machine is added to the **Network Scan** program and you can now scan images through the network.

Note

You can change the scanner properties of your machine and the scan settings from the **Samsung Network Scan Manager** window. Click **Properties** and set the options in each tab.

Registering authorized users

To use scanning to Email, FTP, or SMB, you need to register authorized users using SyncThru™ Web Service. You can add up to 50 users.

1 Enter your machine's IP address as the URL in a browser and click **Go** to access the web site of your machine.

2 Click **Machine Settings** and **User Authentication**.

3 Click **Add**.

4 Select the index number where the corresponding entry will be stored, from 1 to 50.

5 Enter your name, user ID, password, and e-mail address.

You need to enter the registered user ID and password in the machine when you start scanning to Email, FTP, SMB from the control panel.

6 Click **Apply**.

Setting up an e-mail account

To scan and send an image as an email attachment, you need to set up network parameters using SyncThru™ Web Service.

1 Enter your machine's IP address as the URL in a browser and click **Go** to access the web site of your machine.

2 Click **Machine Settings** and **E-mail Setup**.

3 Select **IP Address** or **Host Name**.

4 Enter the IP address in dotted decimal notation or a host name.

5 Enter the server port number, from 1 to 65535.

The default port number is 25.

6 Put a check mark in **SMTP Requires Authentication** to require authentication.

7 Enter the SMTP server login name and password.

Setting up an FTP server

To use an FTP server, you need to set up parameters for access to FTP servers using SyncThru™ Web Service.

1 Enter your machine's IP address as the URL in a browser and click **Go** to access the web site of your machine.

2 Click **Machine Settings** and **FTP Setup**.

3 Click **Server List**.

4 Click **Add**.

5 Select the index number, from 1 to 20.

6 Enter a name in **Alias for the Setup** for the corresponding Server List entry. This name will be displayed on your machine.

7 Select **IP Address** or **Host Name**.

8 Enter the server address in dotted decimal notation or a host name.

9 Enter the server port number, from 1 to 65535.

The default port number is 21.

10 Put a check mark in **Anonymous** if you want to allow the FTP server to be accessed by unauthorized persons.

By default, this is unchecked.

11 Enter the login name and password.

12 Enter the location the scanned image will be stored. This is the location you have entered in the step 6.

13 Click **Apply**.

Setting up an SMB server

To use an SMB server, you need to set up parameters for access to SMB servers using SyncThru™ Web Service.

1 Enter your machine's IP address as the URL in a browser and click **Go** to access the web site of your machine.

2 Click **Machine Settings** and **SMB Setup**.

3 Click **Server List**.

4 Click **Add**.

5 Select the index number, from 1 to 20.

6 Enter a name in **Alias for the Setup** for the corresponding Server List entry. This name will be displayed on your machine.

7 Select **IP Address** or **Host Name**.

8 Enter the server address in dotted decimal notation or a host name.

9 Enter the server port number, from 1 to 65535.

The default port number is 139.

10 Enter the share name of the server.

11 Put a check mark in **Anonymous** if you want to allow the SMB server to be accessed by unauthorized persons.

By default, this is unchecked.

12 Enter the login name and password.

13 Enter the domain name of the SMB server.

14 Enter the location the scanned image will be stored. This is the location you have entered in the step 6.

15 Click **Apply**.

Scanning to a network client

Network client allows you to remotely scan an original from your network-connected machine to your computer in JPEG, TIFF, or PDF file format.

Scanning

1 Make sure that your machine and the computer are connected to a network and **Network Scan** is running on the computer.

2 Load originals face up into the DADF, or place a single original face down on the scanner glass.

For details about loading an original, see page 3.1.

3 Press **Scan/Email**.

4 Press the **Scroll** buttons until **NetScan** appears on the bottom line of the display and press **OK**.

5 Enter the ID you have set in the **Samsung Network Scan Manager** window and press **OK**.

6 Enter the PIN you have set in the **Samsung Network Scan Manager** window and press **OK**.

7 If the Reservation option you have set in the Windows Network application is **On**, scanning is started. Or, the Reservation option is **Off**, go to the next step.

8 If the scan destination is folder type, press the **Scroll** buttons until the scan setting option you want appears and press **OK**. Or, press **Start** to immediately start scanning using the default settings.

- **Scan Size**: Sets the image size.
- **Original Type**: Sets the original document's type.
- **Resolution**: Sets the image resolution.
- **Scan Color**: Sets the color mode.
- **Scan Format**: Sets the file format in which the image is to be saved. If you select TIFF or PDF, you can select to scan multiple pages.

If the scan destination is application type, go to the step 11.

9 Press the **Scroll** buttons until the desired status appears and press **OK**.

10 Press **Start** to start scanning.

Your machine begins scanning the original to the computer where the program is running.

11 Press the **Scroll** buttons until the application you want appears and press **OK**. Scanning is started.

Setting network scan timeout

If the **Network Scan** program on your computer does not send a refresh request and does not scan a job within a specified timeout period, your machine cancels the scan job. You can change this timeout setting as needed.

1 Press **Menu** until **System Setup** appears on the bottom line of the display and press **OK**.

2 Press **OK** when **Machine Setup** appears.

3 Press the **Scroll** buttons until **NetScanTimeout** appears and press **OK**.

4 Enter the desired timeout value and press **OK**.

The change will be broadcast over the network and will apply to all clients connected to the network.

5 Press **Stop/Clear** to return to Standby mode.

Scanning to Email

You can scan and send an image as an email attachment. You first need to set up your email account in **SyncThru™ Web Service**. See page 6.4.

Before scanning, you can set the scan options for your scan job. See page 6.6.

1 Make sure that your machine is connected to a network.

2 Load originals face up into the DADF, or place a single original face down on the scanner glass.

For details about loading an original, see page 3.1.

3 Press **Scan/Email**.

4 Press the **Scroll** buttons until **Scan to E-mail** appears on the bottom line of the display and press **OK**.

5 Enter the recipient's email address and press **OK**.

6 The e-mail idle screen displays **From** or **My Login Name** on the top line according to the authentication setting your system

administrator made through the authorized user setup. For details, see page x.x.

7 Press **OK**.

If you set **My Login Name**, enter the Login ID and password and then press **OK**.

8 Enter the recipient's email address and press **OK**.

If you have set up **Address Book**, you can use a one-touch dial numbers or a speed email or group email number to retrieve an address from memory. See page 6.7.

9 To enter additional addresses, press **OK** when **Yes** appears and repeat step 9.

To continue to the next step, press the **Scroll** buttons to select **No** and press **OK**.

10 If the display asks if you want to send the email to your account, press the **Scroll** buttons to select **Yes** or **No** and press **OK**.

Note
This prompt does not appear if you have activated the **Send To Self** option in the email account setup.

11 Enter an email subject and press **OK**.

12 Press the **Scroll** buttons until the file format you want appears and press **OK** or **Start**.

The machine begins scanning and then sends the email.

13 If the machine asks if you want to log off your account, press the **Scroll** buttons to select **Yes** or **No** and press **OK**.

14 Press **Stop/Clear** to return to Standby mode.

Scanning to an FTP server

You can scan an image and then upload it to an FTP server. You need to set up parameters for access to FTP servers from **SyncThru™ Web Service**. See page 6.4.

Before scanning, you can set the scan options for your scan job. See page 6.6.

1 Make sure that your machine is connected to a network.

2 Load originals face up into the DADF or place a single original on the scanner glass.

For details about loading an original, see page 3.1.

3 Press **Scan/Email**.

4 Press the **Scroll** buttons until **Scan to FTP** appears on the bottom line of the display and press **OK**.

5 Enter the user ID and press **OK**.

6 Enter the password and press **OK**.

7 Press the **Scroll** buttons until the FTP server you want appears and press **OK** or **Start**.

8 Press the **Scroll** buttons until the file type you want appears and press **OK** or **Start**.

The machine begins scanning and then sends the file to the specified server.

Scanning to an SMB server

You can scan an image and then send it to an SMB server. You need to set up parameters for access to SMB servers from **SyncThru™ Web Service**. See page 6.4.

Before scanning, you can set the scan options for your scan job. See page 6.6.

1 Make sure that your machine is connected to a network.

2 Load originals face up into the DADF or place a single original on the scanner glass.

For details about loading an original, see page 3.1.

3 Press **Scan/Email**.

4 Press the **Scroll** buttons until **Scan to SMB** appears on the bottom line of the display and press **OK**.

5 Enter the user ID and press **OK**.

6 Enter the password and press **OK**.

7 Press the **Scroll** buttons until the SMB server you want appears and press **OK** or **Start**.

8 Press the **Scroll** buttons until the file format you want appears and press **OK** or **Start**.

The machine begins scanning and then sends the file to the specified server.

Changing the settings for each scan job

Your machine provides you with the following setting options to allow you to customize your scan jobs.

- **Scan Size**: Sets the image size.
- **Original Type**: Sets the original document's type.
- **Resolution**: Sets the image resolution.
- **Scan Color**: Sets the color mode.
- **Scan Format**: Sets the file format in which the image is to be saved. If you select TIFF or PDF, you can select to scan multiple pages. Depending on the selected scan type, this option may not appear.

To customize the settings before starting a scan job:

1 Press **Scan/Email**.

2 Press **Menu** until **Scan Feature** appears on the bottom line of the display and press **OK**.

3 Press the **Scroll** buttons until the scan type you want appears and press **OK**.

4 Press the **Scroll** buttons until the scan setting option you want appears and press **OK**.

5 Press the **Scroll** buttons until the desired status appears and press **OK**.

6 Repeat steps 4 and 5 to set other setting options.

7 When you have finished, press **Stop/Clear** to return to Standby mode.

Changing the default scan settings

To avoid having to customize the scan settings for each job, you can set up default scan settings for each scan type.

1 Press **Scan/Email**.

2 Press **Menu** until **Scan Setup** appears on the bottom line of the display and press **OK**.

3 Press **OK** when **Change Default** appears.

4 Press the **Scroll** buttons until the scan type you want appears and press **OK**.

5 Press the **Scroll** buttons until the scan setting option you want appears and press **OK**.

6 Press the **Scroll** buttons until the desired status appears and press **OK**.

7 Repeat steps 5 and 6 to change other settings.

8 To change the default settings for other scan types, press **Back** and repeat from step 4.

9 Press **Stop/Clear** to return to Standby mode.

Setting up Address Book

You can set up **Address Book** with the email addresses you use frequently via **SyncThru™ Web Service** and then easily and quickly enter email addresses by entering the location numbers assigned to them in **Address book**.

Registering speed email numbers

1 Enter your machine's IP address as the URL in a browser and click **Go** to access the web site of your machine.

2 Click **Machine Settings**, **E-mail Setup** and **Local Address Book**.

3 Click **Add**.

4 Select a location number and enter the user name and e-mail address you want.

5 Click **Apply**.

Note
You can also click **Import** and obtain your address book from your computer.

Configuring group email numbers

1 Enter your machine's IP address as the URL in a browser and click **Go** to access the web site of your machine.

2 Click **Machine Settings**, **E-mail Setup** and **Group Address Book**.

3 Click **Add**.

4 Select a group number and enter the group name you want.

5 Select speed email numbers that will be included in the group.

6 Click **Apply**.

Retrieving global email addresses from the LDAP[a] server

You can use not only local addresses stored in your machine's memory but also ones in the LDAP server. To use the global addresses, configure the LDAP server first via **SyncThru™ Web Service** as following:

1 Enter your machine's IP address as the URL in a browser and click **Go** to access the web site of your machine.

2 Click **Machine Settings** and **LDAP Server Setup**.

3 Select **IP Address** or **Host Name**.

4 Enter the IP address in dotted decimal notation or as a host name.

5 Enter the server port number, from 1 to 65535.

The default port number is 389.

6 Click **Add**.

Using Address Book entries

To retrieve an email address, use the following ways:

Speed email numbers

When you are prompted to enter a destination address while sending an email, enter the speed email number at which you stored the address you want.

a. LightWeight Directory Access Protocol: An Internet protocol that email and other programs use to look up information from a server.

- For a one-digit speed email location, press and hold the corresponding digit button from the number keypad.
- For a two- or three-digit speed email location, press the first digit button(s) and then hold down the last digit button.

You can also press the one-touch dials at which you stored the address you want.

You can also search through memory for an entry by pressing **Address Book**. See page 6.8.

Group email numbers

To use a group email entry, you need to search for and select it from memory.

When you are prompted to enter a destination address while sending an email, press **Address Book**. See page 6.8.

Global email addresses

To use a global email addresses in the LDAP server, you need to search for and select it from memory.

When you are prompted to enter a destination address while sending an email, press **Address Book**. See page 6.8.

Searching Address Book for an entry

There are two ways to search for an address in memory. You can either scan from A to Z sequentially or search by entering the first letters of the name associated with the address.

Searching sequentially through memory

1. If necessary, press **Scan/Email**.
2. Press **Address Book** until **Search&Send** appears on the bottom line of the display and press **OK**.
3. Press the **Scroll** buttons until the number category you want appears and press **OK**.
4. Press **OK** when **All** appears.
5. Press the **Scroll** buttons until the name and address you want appears. You can search upwards or downwards through the entire memory in alphabetical order.

Searching with a particular first letter

1. If necessary press **Scan/Email**.
2. Press **Address Book** until **Search&Send** appears on the bottom line of the display and press **OK**.
3. Press the **Scroll** buttons until the number category you want appears and press **OK**.
4. Press the **Scroll** buttons until **ID** appears and press **OK**.
5. Enter the first few letters of the name you want and press **OK**.
6. Press the **Scroll** buttons until the name you want appears and press **OK**.

Printing Address Book

You can check your **Address Book** settings by printing a list.

1. Press **Address Book** until **Print** appears on the bottom line of the display.
2. Press **OK**. A list showing your one-touch dial settings, and the speed/group email entries print out.

Scan on both sides of paper

By using the **Duplex** button on your machine, you can set the machine to scan on both sides of paper.

1 Press **Duplex**.

2 Press the **Scroll** buttons until the binding option you want appears.

- **Off**: Scans in Normal mode.
- **2Side**: Scans both sides of the original and prints them on both sides of a paper, this function produce exactly the same print out from the original.
- **2->1Side Rotate2**: Scans both sides of the original and prints one of them on sepwarate two papers, but the information on back side of the original is printed 180° rotated.

3 Press **OK** to save your selection.

If the mode is enabled, the **Duplex** button is backlit.

7 Basic printing

This chapter explains common printing tasks.

Printing a document

Your machine allows you to print from various Windows, Macintosh, or Linux applications. The exact steps for printing a document may vary depending on the application you use.

1 Open the document you want to print.

2 Select **Print** from the **File** menu. The Print window is displayed. It may look slightly different depending on your application.

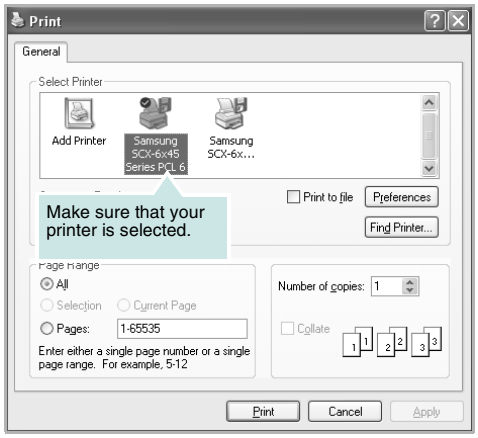

3 Select **your printer driver** from the **Selet Printer** drop-down list.

4 To start the print job, click **OK** or **Print** in the Print window.

For details about printing, see the **Software Section**.

Canceling a print job

If the print job is waiting in a print queue or print spooler, such as the printer group in Windows, delete the job as follows:

1 Click the Windows **Start** menu.

2 For Windows 98/Me/NT 4.0/2000, select **Settings** and then **Printers**.

For Windows XP/2003, select **Printers and Faxes**.

3 Double-click the **Samsung SCX-6x45 Series PCL 6** icon.

4 From the **Document** menu, select **Cancel Printing** (Windows 98/Me) or **Cancel** (Windows NT 4.0/2000/XP).

Note
You can also access this window by simply double-clicking the printer icon at the bottom right corner of the Windows desktop.

You can also cancel the current job by pressing **Stop** on the control panel.

8 Machine status and advanced setup

This chapter explains how to browse the current status of your machine, and the method of setting the advanced machine setup. Please read this chapter carefully to use your machine's diverse features.

This chapter includes:

- **Starting Machine Setup**
- **Machine Status screen**
- **Admin Setting screen**
- **General Settings**
- **Fax Setup**
- **Network Setup**
- **Login Setup**
- **Optional Service**
- **Print/Report**

Starting Machine Setup

1 Press **Machine Setup** button in the control panel.

2 Select the appropriate item for your occasion.

- **Machine Status**: shows the current statement of the machine.
- **Admin Setting**: allows administrator to set up the machine.

When you press **Admin Setting**, login message pops up. Enter password and press **OK**. (Factory setting is 1111)

Machine Status screen

Press **Machine Setup** on the control panel and press **Machine Status**.

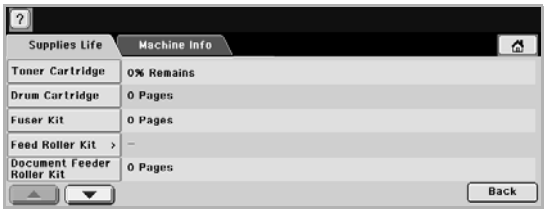

- **Supplies Life**: shows the remains of the supplies of the machine. Menu lists are **Toner Cartridge**, **Drum Cartridge**, **Fuser Kit**, **Feed Roller Kit**, **Document Feeder Roller Kit**, **Bypass Roller Kit**, **BTR Kit**, **DADF Friction Pad Kit**.
- **Machine Info.**: shows the detailed information of the machine, like hardware options, paper supplies, memory, tray status, and so forth. Menu lists are **Machine Details**, **Tray Status**, **Billing/ Counters**, **Print Reports**, and **SEC Test**.
- Up/Down arrows: shows more option lists.
- **Back**: goes to the previous screen.

Admin Setting screen

You can set the machine setting in depth.

Note

When you press **Admin Setting**, login message appears. If the administrator set the password, you have to enter the password every time you want to use **Admin Setting**.

- **General**: sets the basic settings of the machine such as location, date, time, and so forth. (Page 8.2)
- **Setup**: sets the values for fax, network, login, and optional service is for enabling the feature listed on the screen.
- **Print/Report**: prints configuration or font list. And this option shows the report of the machine features. (Page 8.5)
- Up/Down arrows: shows more option lists.
- **Back**: goes to the previous screen.

General Settings

First when you get ready to use the machine, it is recommended to set the machine up for better use.

1 Press **Machine Setup** button in the control panel.

2 Press **Admin Setting**. Login message pops up, then enter password and press **OK**.

3 Press **General** tab.

Option	Description
Device Info	The options are **Service Center Registratio**n and **Contact Info**. You may enter information of the service center and the purchasing point.
Data/Time	You can set the date and time. The current date and time are shown on the screen when your machine is on and ready to work. All of your faxes have the date and time printed on them.
Default Settings	To change the default option values for copy, fax, email, scan and paper at once, use this feature.
Measurement	This option let you change the unit which used within the machine, and set the numeric separation with comma or period.
Timers	The options are **System Timeout**, **Incomplete Scan Timer**, and **Held Job Timeout**. **System Timeout** sets the machine to return to the default value after completing a job. **Incomplete Scan Timer** sets the machine to wait the specific time and cancels a scan job, when a delay or an error of transferring data/ signal occurs while the machine handling a job. You can set the time duration for the machine waiting. **Held Job Timeout** sets the machine to cancel a job which is held by user.
Language	It allows you to change the language that appears on the touch screen.

Option	Description
Energy Saver	You can reduce the energy consumption by setting the machine to use this features.**Scan Power Save** turns off the scanner lamp under the glass, and **Power Save** goes into the sleep mode when there is no input to the machine.
Tray Management	This feature allows you to select the tray and paper you use for printing job. Paper size, paper type, and paper color options are adjusted here. And Tray Confirmation Message is to activate the window asking whether you set the paper size and type for just opened tray.
Altitude Adjustment	The printing quality is affected by atmospheric pressure, and atmospheric pressure is determined by the height of the machine above sea level. This feature lets you adjust the altitude for the machine used in a height district. The machine in higher location is needed to set this feature to High3, which affects the printing quality. (Page x.x)
Output Options	**Out of Staple Option** is for, when the staple is run out, you to let the machine stop processing and wait to refill the staple or continue the job. If you set **Within Job Offsetting** to **On**, the output paper is placed and sorted by job unit.
Contention Management	This feature is useful when two jobs are on process, the machine sets the priority of job type between copy and print.
On Demand Overwrite	To prevent an unauthorized access to your machine, you can set this feature **On**. The machine overwrites the data you have stored and erased from the memory.
Sound	Adjust the machine sound. Press **Fault** to adjust the machine's error sound. Select **Conflict** when you pressed the wrong option. Press **Selection** to sound whenever you press the selection from your touch screen.
Supplies Management	The machine gives you the notification of the Drum and Toner to reorder, and reset the used counter of the Fuser, Bias Transfer Roller, Feed Roller and Document Feeder Friction Pad counter.
Machine Test	The machine prints the test image patterns by **Image Quality Test Patterns**. Press **User Interface Test** for user interface.

Fax Setup

Your machine provides you with various user-selectable options for setting up the fax system. You can change the default settings for your preferences and needs.

1 Press **Machine Setup** button in the control panel.

2 Press **Admin Setting**. Login message pops up, then enter password and press **OK**.

3 Press **Setup** tab > **Fax Setup**.

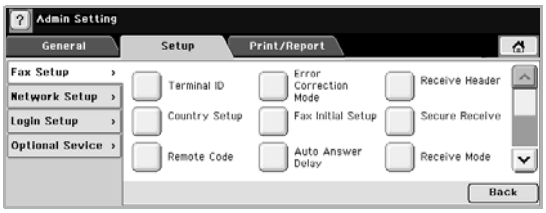

Option	Description
Terminal ID	**Terminal ID** allows you entering the machine ID name and fax number which are printed at the top of each page.
Country Setup	Country Setup allows you selecting the country name. This option usually pre-set for user.
Remote Code	This feature works best when you are using an extension telephone connected to the EXT socket on the back of your machine. You can receive a fax from someone you are talking to on the extension telephone, without going to the fax machine. When you receive a call on the extension phone and hear fax tones, press the keys ✳**9**✳ on the extension phone. The machine receives the fax. Press the buttons slowly in sequence. If you still hear the fax tone from the remote machine, try pressing ✳**9**✳ once again.To change the ✳**9**✳ to, for example, ✳**3**✳, follow next steps.
Error Correction Mode	**Error Correction Mode** (ECM) helps with poor line quality and makes sure any faxes you send are sent smoothly to any other ECM-equipped fax machine. Sending a fax using ECM may take more time.

Option	Description
Fax Initial setup	You can set the **Receive Mode** among Telephone, Fax, Answering Machine/Fax, and the Dial Type DP (Dial Pulse) or MF (Multi Frequency). When user selects **Answering Machine/Fax**, user can receive a fax while the line is being used by answering machine. Note: To know what to select for **Dial Type**, contact your local telephone company.
Auto Answer Delay	Your can specify the number of times the machine reins before answering an incoming call.
Receive Header	Use this option to automatically print the page number, date and time of fax reception at the bottom of each page.
Secure Receive	You may need to prevent your received faxes from being accessed by unauthorized people. **Secure Receive** feature restricts printing of received faxes when the machine is unattended. In **Secure Receive** option is **On**, all incoming faxes go into memory. Passcode is used when you want to print received faxes in memory.
Auto Reduction	When receiving a fax containing pages as long as or longer than the paper loaded in the paper tray, the machine can reduce the size of the original to fit the size of the paper loaded in the machine. If this feature set to **Off**, the machine can not reduce the original to fit onto on page The original will be divided and printed in actual size on two or more pages. **Note:** Discard Size When you do not use **Auto Reduction** feature, you can set the discard size which the machine discard a specific length from the end of the received fax. The machine will print the received fax on one or more sheets of paper, minus the data that would have been on the specified discard segment.
Automatic Redial Setup	The machine can automatically redial a remote fax machine if it was busy. You can set the number of redial attempts and an interval between attempts. Selecting 0 for Redial Attempts is that the machine does not use this feature.
Speaker Volume (Audio Line Monitor)	

Option	Description
Prefix Dial	This feature allows you to set a prefix of up to five digits. This number dials before any automatic dial number is started. User may set this **Prefix Dial** for accessing a PABX (example ⁎ **9**) or area number (example 02).
Transmission Header Text	You can set the machine to send the fax with header texts which are printed on the top of each page. In this case, **Terminal ID** does not show on the page for particular heading text you entered. Maximum 30 characters can be entered.
Send Batch	
Junk Fax Prevention	The machine does not accept faxes sent from remote stations whose numbers are stored in the memory as junk fax numbers. You can enter maximum 10 numbers of junk fax numbers. You should enter the last numbers (1~7 digit) of the fax number.
Ring Volume	This feature adjusts the ring volume. When you select **Off**, the machine does not ring to notify you of receiving a fax.
Dial Tone Volume	When you press **On Hook Dial** to send a fax, you can hear the certain tone sound. To adjust the tone volume, you can use this feature. If you select value '1', volume is the smallest.
Output Options	When the machine prints a received fax, you can set the machine to print fax data on both sides of paper, or stapled.
Document Setting	You can set the document stored in Mail Box to delete on printing or keep. Also you can set th e document stored for polling to delete on printing or keep. Select option, Documents Received in Mailbox, Documents Stored for Polling.
Output Tray	This feature let you select the paper tray for receiving a fax.
Fax Forward Settings	
Mailbox Setup	You can create, edit or delete Mailbox. Enter **Mailbox ID**, **Mailbox Name**, **Mailbox Passcode** by pressing options. **Note:** If you set Notification option to **On**, you are notified when a fax received into Mailbox.

Network Setup

You may use the network setup on the machine's touch screen. Before that, you have to aware of the type of network protocols and computer system you use. If you are not sure what to set, please contact your network administrator to set this machine's network setup.

For further explanation about network environment, refer to Network Printer User's Guide within Network Utilities CD.

1 Press **Machine Setup** button in the control panel.

2 Press **Admin Setting**. Login message pops up, then enter password and press **OK**.

3 Press **Setup** tab > **Network Setup**.

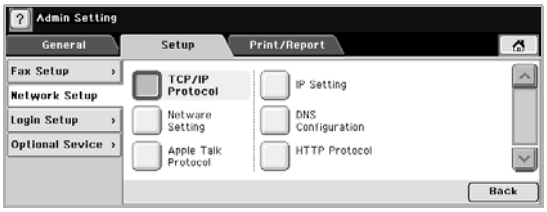

Option	Description
TCP/IP Protocol	DHCP, BOOTP, Static options are available. Select appropriate protocol and configure some parameters to use network environment.
Netware Setting	This machine is compatible with Novell NetWare networks. You can print to the network printer from any NetWare client.
AppleTalk Protocol	For Macintosh network environment, select this option. This option is for providing packet transmission and routing functionality for networking.

Login Setup

This feature let you control and lock all the out-going data, and change the password.

1 Press **Machine Setup** button in the control panel.

2 Press **Admin Setting**. Login message pops up, then enter password and press **OK**.

3 Press **Setup** tab > **Login Setup**.

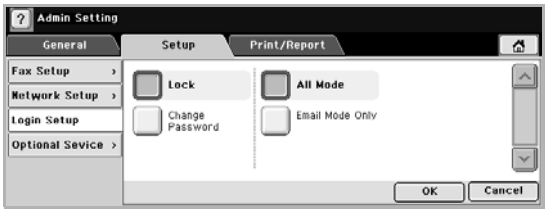

Option	Description
Lock	Select **All Mode** to lock all the out-going data.
Change Password	You can lock the machine by setting the password. To delete the password, leave **New Password** area **Confirm Password** area empty and press **OK**.

Optional Service

To use optional services herein, you should select **On**.

1 Press **Machine Setup** button in the control panel.

2 Press **Admin Setting**. Login message pops up, then enter password and press **OK**.

3 Press **Setup** tab > **Optional Service**.

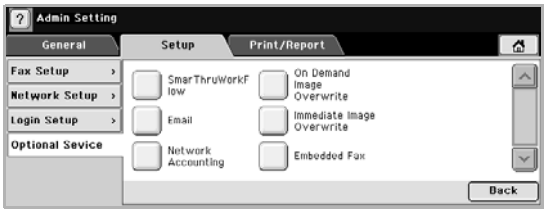

Option	Description
SmarThruWorkFlow	
Email	
Network Accounting	
On Demand Image Overwrite	
Embedded Fax	

Print/Report

You can print the repot on the machine's configuration or font list.

1 Press **Machine Setup** button in the control panel.

2 Press **Admin Setting**. Login message pops up, then enter password and press **OK**.

3 Press **Setup** tab > **Print/Report**.

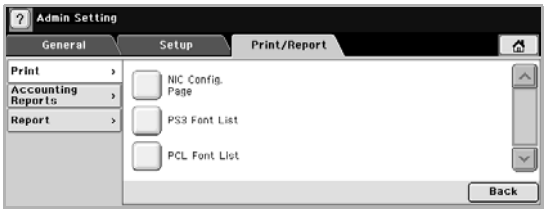

Option		Description
Print		You can print **NIC Config. Page**, **PS3 Font List** and **PCL Font List**.
Accounting Reports	**Billing/ Counters**	
	Authenticatio n Log	
	Accounting Reports	
Report	**Configuration Report**	
	SMTP Log	
	LDAP Log	
	Fax Report	
	Scan to File Confirmation	
	Email Report	

9 Maintenance

This chapter provides information for maintaining your machine and the toner cartridge.

This chapter includes:

- **Printing reports**
- **Clearing memory**
- **Cleaning your machine**
- **Maintaining the toner cartridge**
- **Maintenance Parts**
- **Managing your machine from the website**
- **Checking the machine's serial number**
- **System Administrtion Tools**

Printing reports

Your machine can provide various reports with useful information you will need. The following reports are available:

Report/List	Description
Configuration	This list shows the status of the user-selectable options. You may print this list to confirm your changes after changing settings.
Address Book	This list shows all of the fax numbers and email addresses currently stored in the machine's memory.
Send Report	This report shows the fax number, the number of pages, the elapsed time of the job, the communication mode, and the communication results for a particular fax job. You can set up your machine to automatically print a transmission confirmation report after each fax job. See page x.x.
Sent Report	This report shows information on the faxes and emails you have recently sent. You can set the machine to automatically print this report every 50 communications. See page x.x.
Fax RCV Report	This report shows information on the faxes you have recently received.
Scheduled Jobs	This list shows the documents currently stored for delayed faxes along with the starting time and type of each operation.
JunkFax Report	This list shows the fax numbers specified as junk fax numbers. To add or delete numbers to or from this list, access the **Junk Fax Setup** menu.
Network Info.	This list shows information on your machine's network connection and configuration.
NetScan Report	This report shows information for the Network Scan records including IP address, time and date, the number of pages scanned, and results. This report is automatically printed every 50 network scan jobs.
User Auth List	This list shows authorized users who are allowed to use the email function.

Printing a report

1 Press **Machine Setup** button in the control panel.

2 Press **Admin Setting**.

3 Login message appears, enter password (Factory setting: 1111) with number keypad and press **OK**.

4 Press **Print/Report** tab > **Report**.

5 Press the report or list you want to print appears and press **OK**.

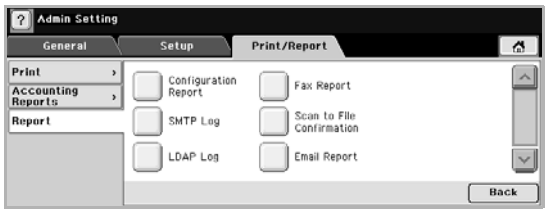

6 Select you want report and press **OK**.

The selected information prints out.

Other available reports

Your machine prints the following reports automatically or depending on your setting.

- **Multi-communication Report**: prints automatically after sending faxes from more than one location.
- **Power Failure Report**: prints out automatically when power is restored after a power failure if any data loss occurs due to the power failure.

Clearing memory

You can selectively clear information stored in your machine's memory.

1 Press **Menu** until **Admin Setup** appears on the bottom line of the display and press **OK**.

2 Press the **Scroll** buttons until **Clear Setting** appears and press **OK**.

3 Press the **Scroll** buttons until the item you want to clear appears.

Options	Description
All Settings	Clears all of the data stored in memory and resets all of your settings to the factory default.
Fax Setup	Restores all of the fax options to the factory default.
Copy Setup	Restores all of the copy options to the factory default.
Scan Setup	Restores all of the scan options to the factory default.
System Setup	Restores all of the system options to the factory default.
Network	Restores all of the network options to the factory default.
Address Book	Clears all of the fax number and email address entries stored in memory.
Send Report	Clears all records of sent faxes and emails.
Fax RCV Report	Clears all records of received faxes.
NetScan Report	Clears the information on network scan sessions in memory.

4 Press **OK** when **Yes** appears.

5 Press **OK** again to confirm clearing.

6 Repeat steps 3 through 5 to clear another item.

7 Press **Stop** to return to Standby mode.

Cleaning your machine

To maintain print and scan quality, follow the cleaning procedures below each time the toner cartridge is replaced or if print and scan quality problems occur.

Caution
Cleaning the cabinet of the machine with cleaning materials containing large amounts of alcohol, solvent, or other strong substances can discolor or distort the cabinet.

Cleaning the outside

Clean the cabinet of the machine with a soft lint-free cloth. You can dampen the cloth slightly with water, but be careful not to let any water drip onto or into the machine.

Cleaning the inside

Clean the inside of the machine. Contact a service representative.

Cleaning the scan unit

Keeping the scan unit clean helps ensure the best possible copies. We suggest that you clean the scan unit at the start of each day and during the day, as needed.

1 Slightly dampen a soft lint-free cloth or paper towel with water.

2 Open the scanner lid.

3 Wipe the surface of the scanner glass and DADF glass until it is clean and dry.

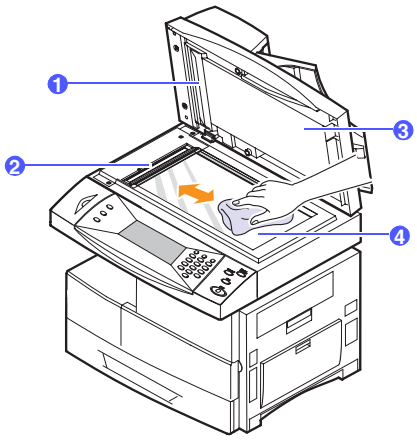

1	white sheet
2	DADF glass
3	scanner lid
4	scanner glass

4 Wipe the underside of the scanner lid and white sheet until it is clean and dry.

5 Close the scanner lid.

Maintaining the toner cartridge

Toner cartridge storage

To get the most from the toner cartridge, keep the following guidelines in mind:

- Do not remove the toner cartridge from its package until ready for use.
- Do not refill the toner cartridge. The machine warranty does not cover damage caused by using a refilled cartridge.
- Store toner cartridges in the same environment as your machine.
- To prevent damage to the toner cartridge, do not expose it to light for more than a few minutes.

Expected cartridge life

The life of the toner cartridge depends on the amount of toner that print jobs require. When printing text at ISO 19752 5% coverage, a new toner cartridge lasts an average of either 20,000 pages. The actual number may also be different depending on the print density of the pages you print on, and the number of pages may be affected by operating environment, printing interval, media type, and media size. If you print a lot of graphics, you may need to change the cartridge more often.

Redistributing toner

When the toner cartridge is near the end of its life:

- White streaks or light printing occurs.
- **Toner Low** appears on the display.
- The **Status** LED blinks red.

If this happens, you can temporarily reestablish print quality by redistributing the remaining toner in the cartridge. In some cases, white streaks or light printing will still occur even after you have redistributed the toner.

1 Open the side cover.

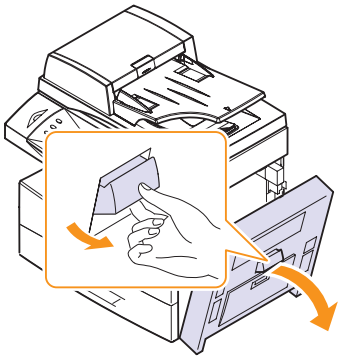

2 Open the front cover.

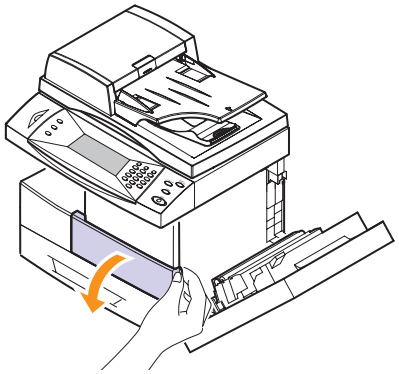

3 Turn the cartridge locking lever upwards to release the toner cartridge.

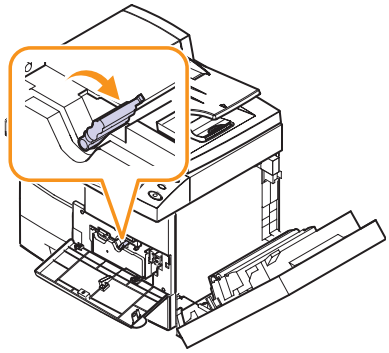

4 Pull the toner cartridge out.

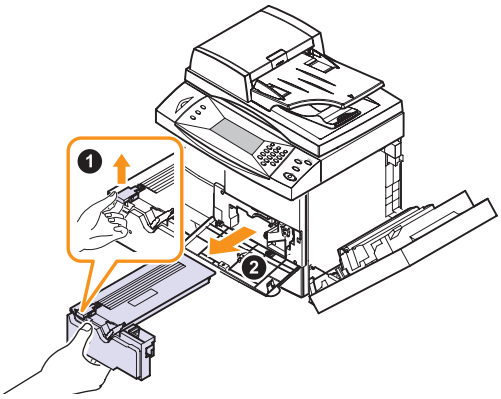

5 Hold the toner cartridge by the handle and slowly insert the cartridge into the opening in the machine.

6 Reinstall the cartridge and turn the cartridge locking lever downwards.

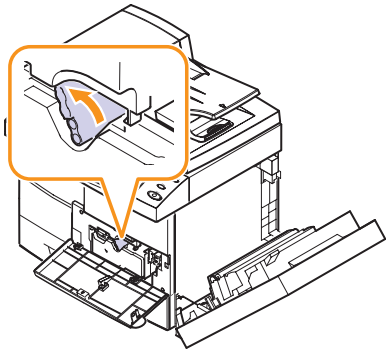

7 Close the front cover, then the side cover.

Replacing the toner cartridge

When the toner cartridge is completely empty:

- **Toner Empty** appears on the display.
- The **Status** LED lights red.
- The machine stops printing. The incoming faxes are saved in memory.

At this stage, the toner cartridge needs to be replaced. For order information for toner cartridges, see page 11.1.

Note
You can set the machine to disregard the **Toner Empty** message and to continue printing. See page 9.7.

1 Open the side cover.

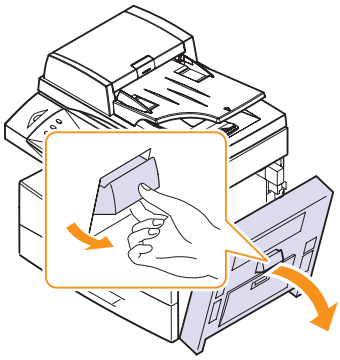

2 Open the front cover.

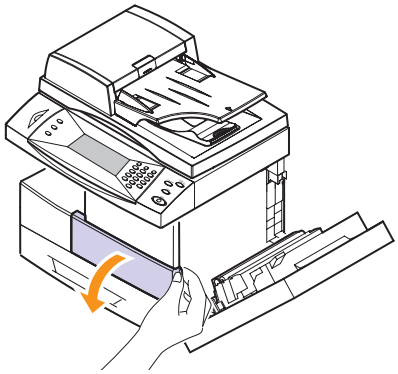

3 Turn the cartridge locking lever upwards to release the toner cartridge.

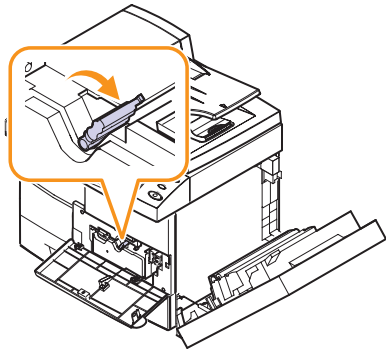

4 Pull the toner cartridge out.

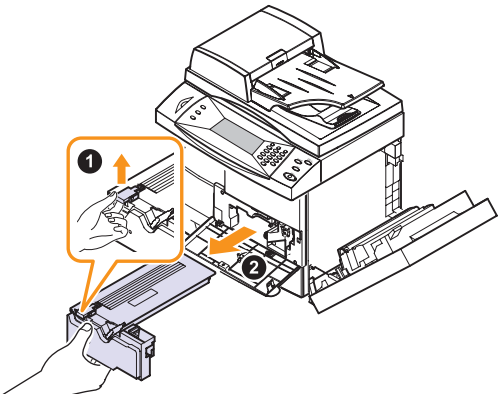

5 Remove the new toner cartridge from its bag.

6 Hold the toner cartridge by the handle and slowly insert the cartridge into the opening in the machine.

7 Slide the new toner cartridge in until it locks in place.

8 Turn the cartridge locking lever downwards until it locks in place..

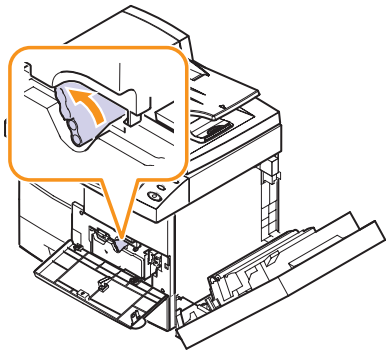

9 Close the front cover, then the side cover.

Replacing the drum cartridge

Expected cartridge life

The life of the drum cartridge depends on the amount of toner that print jobs require. When printing text at ISO 19752 5% coverage, a new drum cartridge lasts an average of either 2,000 pages. The LCD displays **Drum Warning** when the drum is near the end of life. Approximately 80,000 more copies can be made, but you should have a replacement drum cartridge in stock.

- **Replace Drum** appears on the display.
- The **Status** LED lights red.

For order information for drum cartridges, see page 11.1.

1 Open the side cover.

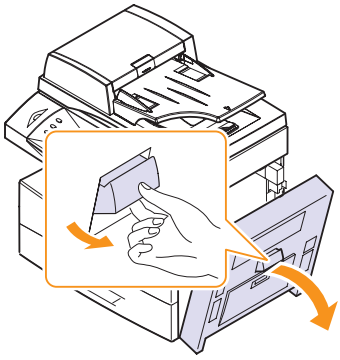

2 Open the front cover.

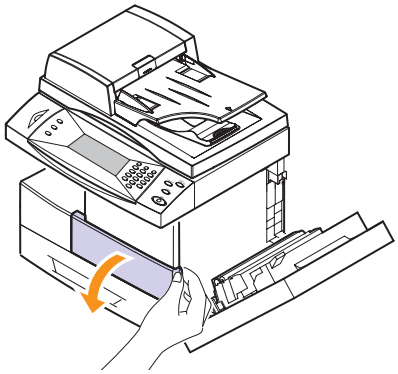

3 Turn the cartridge locking lever upwards to release the toner cartridge.

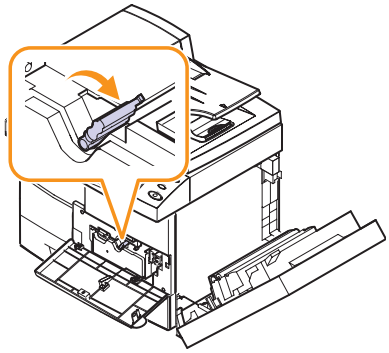

4 Pull the toner cartridge out.

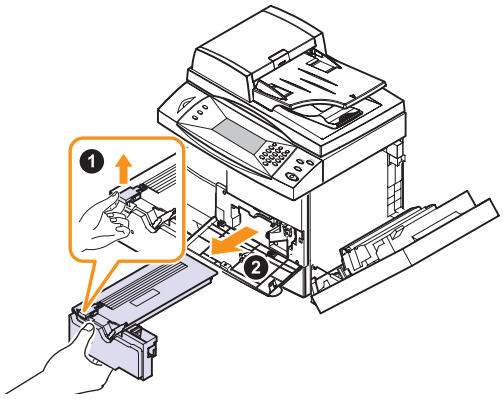

Note
The toner cartridge must be removed to replace the drum cartridge.

5 Pull the used drum cartridge out.

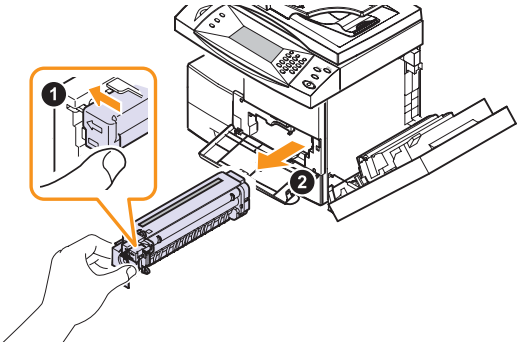

Note
Help the environment by recycling your used drum cartridge. Refer to the recycling brochure packed with the drum cartridge for details.

6 Thoroughly roll the cartridge 5 or 6 times to distribute the drum evenly inside the cartridge.

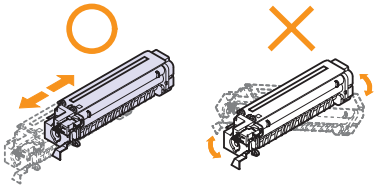

Note
If toner gets on your clothing, wipe it off with a dry cloth and wash clothing in cold water. Hot water sets toner into fabric.

Caution
Do not touch the green underside of the drum cartridge. Use the handle on the cartridge to avoid touching this area.

7 Unpack the new drum cartridge and slide it into place, making sure not to touch the surface of the drum.

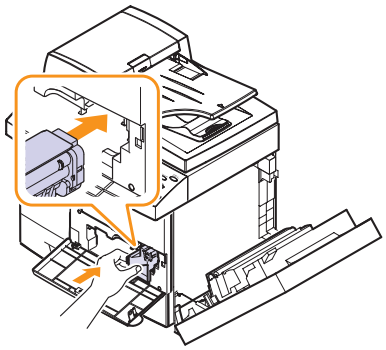

8 Reinstall the cartridge and turn the cartridge locking lever downwards.

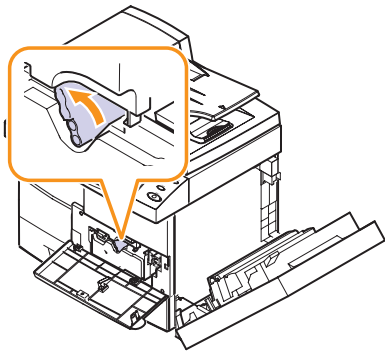

9 Close the front cover, then the side cover.

Note
If you do not reset the counter, **Drum Warning** may appear before the current drum cartridge's time is up.

Cleaning the drum

If there are streaks or spots on your print, the drum cartridge may require cleaning.

1 Before starting the cleaning procedure, make sure that paper is loaded in the machine.

2 Press **Menu** until **System Setup** appears on the bottom line of the display and press **OK**.

3 Press the **Scroll** buttons until **Maintenance** appears and press **OK**.

4 Press **OK** when **Clean Drum** appears.

The machine prints out a cleaning page. Toner particles on the drum surface are affixed to the paper.

5 If the problem remains, repeat steps 1 through 4.

Sending new toner notification

You can set your machine to automatically send a fax to your service company or dealer to notify them that your machine requires a new toner cartridge when the toner cartridge needs to be replaced. The fax number needs to be set by your dealer prior to using this feature, otherwise the machine cannot send a notification even though you turn this service on.

1 Press **Menu** until **System Setup** appears on the bottom line of the display and press **OK**.

2 Press the **Scroll** buttons until **Maintenance** appears and press **OK**.

3 Press the **Scroll** buttons until **Remote Service** appears and press **OK**.

4 Enter a password and press **OK**.

5 Re-enter the password and press **OK**.

6 Press the **Scroll** buttons to select **On** and press **OK**.

7 Press **Stop** to return to Standby mode.

Once this feature has been enabled, you need to enter the password each time you disable or enable it.

Printing continuously when the Toner Empty message appears

When the toner cartridge is nearly empty, the machine shows the **Toner Empty** message and stops printing. You can set the machine to disregard this message when it appears and to continue printing, even though print quality is not optimal.

1 Press **Menu** until **System Setup** appears on the bottom line of the display and press **OK**.

2 Press the **Scroll** buttons until **Maintenance** appears and press **OK**.

3 Press the **Scroll** buttons until **Ignore Toner** appears and press **OK**.

4 Press the **Scroll** buttons until the desired status appears and press **OK**.

If you select off, the received fax cannot be printed until you install a new toner cartridge. However, faxes can be received into memory as long as it allows.

5 Press **Stop** to return to Standby mode.

Clearing the Toner Empty Replace Toner message

When the **Toner Empty Replace Toner** message appears you can configure not to see this message again not to disturb you.

1 Press **Menu** until **System Setup** appears on the bottom line of the display and press **OK**.

2 Press the **Scroll** buttons until **Maintenance** appears and press **OK**.

3 Press the **Scroll** buttons until **CLR Empty Msg.** appears and press **OK**.

4 Select **On** and press **OK**.

5 The **Toner Empty Replace Toner** message does not appear but the **Replace Toner** message will remain for remaining you that the new cartridge needs to be installed for quality.

Caution
Once you have selected **On**, this setting will be permanently written to the memory of the toner cartridge, and this menu will be disappeared from the **Maintenance** menu.

Checking replaceables

If you experience frequent paper jams or printing problems, check the number of pages the machine has printed or scanned. Replace the corresponding parts, if necessary.

The following information are available for checking the replaceable elements of your machine:

- **Total**: displays the total number of pages printed.
- **Toner**: displays how much toner remains in the cartridge.
- **Drum**: displays the number of pages printed.
- **Platen Scan**: displays the number of pages scanned using the scanner glass.

Note
While the following messages are appearing on the display, the sub-menu(s) under **Supplies Life** can be changed:

- **Invalid Toner**
- **Replace Toner**
- **Toner Exhausted**

To check the replaceables:

1 Press **Menu** until **System Setup** appears on the bottom line of the display and press **OK**.

2 Press the **Scroll** buttons until **Maintenance** appears and press **OK**.

3 Press the **Scroll** buttons until **Supplies Life** appears and press **OK**.

4 Press the **Scroll** buttons until the item you want appears and press **OK**.

5 If you selected to print a supply information page, press **OK** to confirm.

6 Press **Stop** to return to Standby mode.

Maintenance Parts

To avoid print quality and paper feed problems resulting from worn parts and to maintain your printer in top working condition the following items will need to be replaced at the specified number of pages or when the life span of each item has expired.

Items	Yield (Average)
DADF rubber pad	Approx. 20,000 pages
DADF feed roller	Approx. 200,000 pages
Transfer roller	Approx. 100,000 pages
Fuser unit	Approx. 200,000 pages
Paper Feeding roller	Approx. 200,000 pages

We highly recommend that an authorized service provider, dealer or the retailer where you bought printer performs this maintenance activity.

Managing your machine from the website

If you have connected your machine to a network and set up TCP/IP network parameters correctly, you can manage the machine via Samsung's **SyncThru™ Web Service**, an embedded web server. Use **SyncThru™ Web Service** to:

- View the machine's device information and check its current status.
- Change TCP/IP parameters and set up other network parameters.
- Change the printer properties.
- Set the machine to send email notifications to let you know the machine's status.
- Get support for using the machine.

To access **SyncThru™ Web Service**:

1 Start a web browser, such as Internet Explorer, from Windows.

2 Enter the machine IP address (http://xxx.xxx.xxx.xxx) in the address field and press the **Enter** key or click **Go**.

Your machine's embedded website opens.

Checking the machine's serial number

When you call for service or register as a user on the Samsung website, the machine's serial number may be required.

You can check the serial number by taking the following steps:

1 Press **Menu** until **Admin Setup** appears on the bottom line of the display and press **OK**.

2 Press the **Scroll** buttons until **Maintenance** appears and press **OK**.

3 Press the **Scroll** buttons until **Serial Number** appears and press **OK**.

4 Check your machine's serial number.

5 Press **Stop** to return to Standby mode.

System Administrtion Tools

The System Admin Tools menu contains a number of parameters and features that may be configured which are categorized as System Administration Tools. These particular tools are placed in the System Admin Tools menu to provide an optional level of protection. The System Admin Tools menu may be protected by enabling the need to enter a password to access the menu.

The following options and features are accessed through the System Admin Tools menu. Some of these features have been discussed in a separate chapter:

- **Password Protect** - enables or disables the need to enter a password to protect the System Admin Tools menu.
- **Change Password** - changes the password used to access the System Admin Tools menu.
- **Network** - sets the network configuration for this machine. For details, see x.x page.
- **Email Setup** - sets the e-mail configuration for this machine. For details, see page x.x.
- **Mailbox Setup** - creates or deletes mailboxes. For details, see page x.x.
- **Department Codes** - enables or disables the department code.
- **Maintenance** - provides several maintenance options.
- **Forward** - sets the machine to forward fax or email messages. For details, see page x.x.
- **Clear Setting** - clears the machine's memory.

Password Protect

The System Admin Tools options may be protected by setting this option to **Yes**. When this option is set to **Yes**, accessing the System Admin Tools will require entering the password.

To enable the password required for the System Admin Tools menu:

1 Press **Menu** until **Admin Setup** appears on the bottom line of the display and press **OK**.

2 Press the **Scroll** buttons until **Password Protect** appears and press **OK**.

3 Press the **Scroll** buttons, select "**Yes**" to enable this feature and enter the password. You may use up to 4 digits for the password. If you select "**No**", this feature turns off.

4 Press **Stop** to return to Standby mode.

Department Code

Department codes may be used when sending faxes in order to track fax usage or for accounting purposes. When Department Codes have been enabled, the user will be prompted for a 3-digit department code every time they send a fax. They do not have to enter a department code if they so desire. A Department Journal can be printed that sorts all fax jobs by department.

Setting the Department Codes

1 Press **Menu** until **Admin Setup** appears on the bottom line of the display and press **OK**.

2 Press the **Scroll** buttons until **Department Codes** appears and press **OK**.

3 Enter your master code and press **OK**.

4 Press the **Scroll** buttons until **New** appears and press **OK**.

5 Enter a department code and press **OK**. You can enter a department number from 1 to 50.

6 Enter a name for the department and press **OK**.

7 Enter a 5-digit password and press **OK**.

8 To add another department code, repeat steps above.

9 Press **Stop** to return to Standby mode.

Printing the Department Codes and Journal

1 Press **Menu** until **Admin Setup** appears on the bottom line of the display and press **OK**.

2 Press the **Scroll** buttons until **Department Codes** appears and press **OK**.

3 Press the **Scroll** buttons until **New** appears and press **OK**.

4 Enter your master code and press **OK**.

5 Press the **Scroll** buttons until **Print** appears and press **OK**.

The information report by departments will be printed.

6 Press **Stop** to return to Standby mode.

Managing the Department Codes

1 Press **Menu** until **Admin Setup** appears on the bottom line of the display and press **OK**.

2 Press the **Scroll** buttons until **Department Codes** appears and press **OK**.

3 Press the **Scroll** buttons until **Management** appears and press **OK**.

4 The following options are available:

- **Department Mode**: allows you to enable or disable the department code feature.
- **Clear Department**: allows you to clear the department journal or codes. You can clear all the department code or a selected department code.
- **Change Master Code**: allows you to delete or change the master code. If you want to change the master code, enter a new master code number.

Change Passcode

This menu allows you to change the password used for the protecting the System Admin Tools menu.

1 Press **Menu** until **Admin Setup** appears on the bottom line of the display and press **OK**.

2 Press the **Scroll** buttons until **Change Password** appears and press **OK**.

3 Enter the current password and then press **OK**.

4 Enter a new password and then press **OK**.

5 To return to the idle mode, press **OK**.

10 Troubleshooting

This chapter gives helpful information for what to do if you encounter an error.

This chapter includes:

- **Clearing document jams**
- **Clearing paper jams**
- **Understanding display messages**
- **Solving other problems**

Clearing document jams

When an original jams while passing through the DADF, **[Document Jam]** appears on the display.

1 Remove any remaining pages from the DADF.

2 Open the DADF cover.

3 Pull the jammed paper gently out of the DADF.

Note
If you do not see the paper in this area, refer to Roller misfeed. See page 10.2.

4 Close the DADF cover. Then load the removed pages, if any, back into the DADF.

Note
To prevent document jams, use the scanner glass for thick, thin, or mixed paper-type originals.