SPECIFICATIONS

3 IN 1 MODULATOR, TUNER, IF BLOCK

MODEL :

(VHA35ASE)

Pb-Free

SANYO TUNER INDUSTRIES CO., LTD.

TUNER ENGINEERING SECTION

CONTENTS

1. COVER	P 1
2. HISTRY OF REVISE	P 2
3. SPECIFICATIONS	P 3 ~ 10
4. FREQUENCY TABLE	P 11 ~ 12
5. APPEARANCE & DIMENSION	P 13
6. SCHEMATIC DIAGRAM	P 14

APPROVED	CHECKED	WRITTEN
Jan. 09. '04	Jan. 9. '04	Jan. 9. '04
K. Oohra	M. Katay	A. Ati

変更経歴書 History of Revise

MK 記号	Date 年月日	Spec. No. 仕様書No.	Subject(Outline) 件名（変更内容）	Reason 変更理由	Rev. Page 変更頁	Indi 変更表示	Receipt 受領年月日 Rec't № 受領番号	Schedule 納入予定日 Delive'd 納入日	OP 担当
	04.01.09	BX-3873	APPROVAL PETITION 新規受領願			なし	. .	. .	青地
	. .						. .	. .	
	. .						. .	. .	
	. .						. .	. .	
	. .						. .	. .	
	. .						. .	. .	
	. .						. .	. .	
	. .						. .	. .	
	. .						. .	. .	
	. .						. .	. .	
	. .						. .	. .	
	. .						. .	. .	
	. .						. .	. .	
	. .						. .	. .	

Product Name 品名	Code 品番	Customer ユーザ	
3 IN 1 MODULATOR, TUNER, IF BLOCK		Our Co. 弊社	１１５VHA３５ASME○

1. GENERAL

1-1 Summary

This unit has RF modulator, tuner and VIF circuits in a case.

1-2 Receiving channels and system

USA 181 channels

System	NTSC-M
VHF Low Band	2 ～ B CH
VHF High Band	C ～ W+11 CH
UHF Band	W+12 ～ 69 CH

1-3 Modulator output channels

CH SW Open	3 CH
CH SW GND	4 CH

1-4 Input, output impedance

ANT input impedance	75 Ω unbalanced
ANT output impedance	75 Ω unbalanced

1-5 Permissible maximum voltage

+B,CONTROL	+ 5.5 V
BT	+31.0 V

1-6 Normal voltage

+B,CONTROL	+ 5 V ± 5 %
BT	+30 V ± 5 %

1-7 Voltage for guaranteeing electrical specification

+B,CONTROL	+ 5 V ± 0.1 V
BT	+30 V ± 0.1 V

1-8 Temperature

Operating temperature	- 5 to +60 °C
Storage temperature	-20 to +70 °C

1-9 Humidity

Operating humidity	35 to 80 % RH
Storage humidity	10 to 90 % RH

1-10 Intermediate frequencies

Picture carrier	45.75 MHz
Sound carrier	41.25 MHz

1-11 Current consumption

	TYP	MAX
+B	170 mA	230 mA
CONTROL	350 μA	700 μA
BT	2.0 mA	5.0 mA

1-12 Applied safety and regulation standards

UL1492
FCC Part 15
CSA C22.2 No.1
IC BETS-7

1-13 Marking

Customer Model Number.
VHA35ASE ← Sanyo's Model Number.
LOT○○○○ ○ ← Alteration mark (first change begins from letter "A".)

DAY	1/A,2/B,3/C ---------- 25/Y,26/Z,27/a,28/b,29/d,30/e,31/f						
MONTH	Jan/A	Feb/B				Nov/K	Dec/L
YEAR	'03/Q	'04/R	'05/S	'06/T	'07/U	'08/V	'09/W

Mark of made in INDONESIA "J"
CHINA "F"
JAPAN " "

1-14 Terminals

Number	Terminal	Function
1	AUDIO IN	MOD AUDIO INPUT
2	CH.SW	CHANNEL SWITCH (OPEN/GND)
3	+B	+B (+5V)
4	CONTROL	MOD OUTPUT ON/OFF(+5V/0V)
5	VIDEO IN	MOD VIDEO INPUT
6		
7	N.C.	(RF AGC TP)
8	X'TAL	3.58MHz INPUT
9	N.C.	- - -
10	CLOCK	CLOCK SIGNAL INPUT
11	DATA	DATA SIGNAL INPUT
12	AFT OUT	AFT OUTPUT
13	AUDIO OUT	AUDIO OUTPUT
14	SIF OUT	SIF OUTPUT
15	BT	TUNING(+31V)
16	IF OUT	IF OUTPUT
17	VIDEO OUT	VIDEO OUTPUT

(RF MODULATOR SECTION)

2. RF MODULATOR OUTPUT CHARACTERISTICS

	ITEMS	SPECIFICATION				MEASUREMENT TERMS
		MIN	TYP	MAX	UNIT	
2-1	V.S.W.R.		2	3		ANT out (MOD.ON) 60 ～ 72 MHz
2-2	Picture carrier frequency	-50	fp	50	KHz	
2-3	Sound carrier frequency	-0.007	fp+4.5	0.007	MHz	
2-4	Picture level	63.5	66.5	69.5	dBμ (close)	
2-5	P/S ratio	19	16	13	dB	
2-6	Spurious level without pass band			36	dBμ (close)	0 ～ (fp-4.6) MHz, (fp+7.4) ～ 1000 MHz
2-7	Spurious level within pass band			-65	dB	fp ～ (fp+4.5) MHz Video in : None
2-8	920 KHz beat		-65	-55	dB	Video in : 3.58 MHz, 0.4 Vp-p Measure the level of fp + 920 KHz

3. RF MODULATOR VIDEO CHARACTERISTICS

	ITEMS	SPECIFICATION				MEASUREMENT TERMS
		MIN	TYP	MAX	UNIT	
3-1	Video in impedance	0.7	1.0	1.3	KΩ	0 ～ 4.2 MHz (unbalance)
3-2	Video modulation	71	78	85	%	Video in : 1 Vp-p
3-3	Sync ratio	26.5	28.5	30	%	S/(V+S)
3-4	Video frequency characteristics	-3	-1	2	dB	0.5 ～ 4.2 MHz (1 MHz base)
3-5	DG		1	7	%	Video in : 1 Vp-p, stair step chroma 20 IRE
3-6	DP		1	7	deg	
3-7	Video S/N ratio	45	48		dB	
3-8	Maximum modulation	88	94	99	%	

4. RF MODULATOR AUDIO CHARACTERISTICS

	ITEMS	SPECIFICATION				MEASUREMENT TERMS
		MIN	TYP	MAX	UNIT	
4-1	Audio in impedance	10			KΩ	50 Hz ～ 10 KHz (unbalance)
4-2	Modulation	80	100	120	%	Audio in : -3.8 dBs, 1 KHz (±25 KHz deviation : 100 %)
4-3	Audio frequency characteristics	-3	-0.5	3	dB	50 Hz～ 10 KHz (1 KHz base)
4-4	Distortion		0.3	1	%	Audio in : -3.8 dBs, 1 KHz
4-5	Audio S/N ratio	45	50		dB	Audio in : -3.8 dBs, 1 KHz Video in : 2 Vp-p, color bar

5. SW CIRCUITS CHARACTERISTICS

	ITEMS	SPECIFICATION				MEASUREMENT TERMS
		MIN	TYP	MAX	UNIT	
5-1	V.S.W.R.			3		ANT out (MOD.OFF) 54～ 810 MHz
5-2	Insertion loss			6	dB	ANT in - ANT out (MOD.OFF) 54 ～ 810 MHz
5-3	Separation	60	65		dB	ANT in - ANT out (MOD.ON) 60 ～ 72 MHz
5-4	ANT in terminal leakage voltage		0	9.5	dBμ (close)	

6. RF MODULATOR THERMAL STABILITY CHARACTERISTICS

	ITEMS	SPECIFICATION				MEASUREMENT TERMS
		MIN	TYP	MAX	UNIT	
6-1	Video modulation	-10		10	%	0 ～ 60 ℃(25 ℃ standard)
6-2	Sound modulation	-10		10	%	
6-3	Picture carrier frequency	-80		80	KHz	
6-4	Sound carrier frequency	-12		12	KHz	
6-5	Video output level	-2		2	dB	
6-6	P/S ratio	-2.5		2.5	dB	

(IF SECTION)

7. IF OUT CHARACTERISTICS

	ITEMS		SPECIFICATION MIN	TYP	MAX	UNIT	MEASUREMENT TERMS
7-1	Sensitivity	VHF		34	38	dBμ	B.P.F (100 KHz ～ 4.2 MHz)
		CATV,UHF		34	38	(close)	Except sync. and chroma signal S/N=20 dB
7-2	Video S/N ratio	VHF	45	47		dB	Note : In case of item 1,2,5, 6,7,8 and 9, the following additional circuit is to be connected between video out terminal and the measuring instrument. See Fig. 1
		CATV,UHF	45	46			
7-3	Maximum input	VHF	100			dBμ	
		CATV,UHF	90			(open)	
7-4	Video output level		0.8	1	1.2	Vp-p	
7-5	Sync ratio		26	29	32	%	Sync ratio 28.57 % standard
7-6	burst ratio		16	25	36	%	burst ratio 28.57 % standard
7-7	Video frequency characteristics						
		1 MHz	-1.5	0	1.5	dB	JIS C-6101(500 KHz standard)
		2 MHz	-2	0	3		
		3 MHz	-3.5	-1	3		
7-8	DP				8	deg	10 steps staircase signal 87.5 % MOD. burst standard (Except 10th step)
7-9	DG				8	%	As the above.
7-10	C/L delay		-150	0	150	nsec	Group delay 0.5 MHz versus 3.58 ±0.5 MHz
7-11	AGC flatness		-1	0	1	dB	Sensitivity level to maximum input level
7-12	Bar pulse response			5	13	%	C1/D C2/D E1/D E2/D

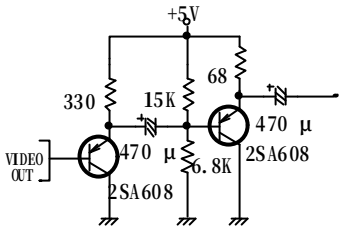

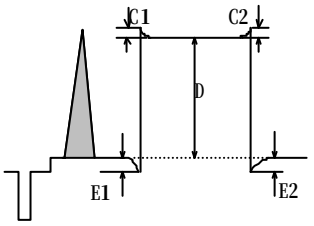

※ ANT In input level 79 dBμ (75Ω OPEN) except 7-1,7-3,7-11, P/S=10 dB

8. IF AUDIO OUT CHARACTERISTICS

	ITEMS	SPECIFICATION				MEASUREMENT TERMS
		MIN	TYP	MAX	UNIT	
8-1	Audio output level	100	140	173	mVrms	400 Hz 30 % MOD. 47 KΩ load under the black burst.
8-2	Audio frequency characteristics 20 Hz～ 12 KHz	-3	0	+3	dB	400 Hz 30 % MOD. Under the black burst. 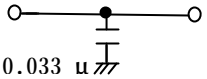
8-3	Audio distortion		0.5	2	%	1 KHz 100 % MOD. Under the black burst.
8-4	Audio S/N	48	52		dB	Black burst,1kHz,30 % MOD. H.P.F:400Hz
8-5	Audio sensitivity VHF CATV,UHF		24 24	30 34	dBμ (close)	S/N 30 dB
8-6	Buzz Color bar Sweep		10 50	50 100	mVp-p	Split color bar signal P/S 10 dB Video sweep 0.5～4 MHz (Audio non MOD.)
8-7	SIF output level	93	100	110	dBμ (open)	US 11CH,79 dBμ(open), P/S 10dB, Audio non Mod. Use FET probe

※ ANT In input level 66 dBμ (75 Ω open) except 8-5. P/S=-7 dB

9. AFT CHARACTERISTICS

	ITEMS	SPECIFICATION				MEASUREMENT TERMS
		MIN	TYP	MAX	UNIT	
9-1	AFT center frequency	2.0	3.0	4.0	V	10 steps staircase at US 12 CH
9-2	AFT output voltage MIN V MAX V	 4.0		1.0	V	

10. IF THERMAL CHARACTERISTICS

	ITEMS	SPECIFICATION				MEASUREMENT TERMS
		MIN	TYP	MAX	UNIT	
10-1	Video output level	-10		10	%	Difference between the measurement value in the standard condition and the value measured in the temperature range of -5 °C to 60 °C
10-2	Burst ratio	-10		10	%	
10-3	Sync ratio	-10		10	%	
10-4	Video S/N	-3		3	dB	
10-5	Video sensitivity	-4		4	dB	
10-6	Audio output level	-2		2	dB	
10-7	Audio S/N	-3		3	dB	
10-8	Audio sensitivity	-4		4	dB	
10-9	AFT center voltage	-2		2	V	

(TUNER SECTION)

11. TUNER CHARACTERISTICS

11-1 Tuning voltage range

VHF	0.5 to 30 V
UHF	0.5 to 30 V

Frequency synthesizer minimum voltage 0.5 V

11-2 Power gain

VHF	MIN 25 dB
UHF	MIN 24 dB

11-3 Power gain deviation between channels

VHF	12 dB MAX, TYP 6 dB
UHF	14 dB MAX, TYP 6 dB

11-4 Noise figure

VHF	14 dB MAX
CATV,UHF	14 dB MAX

11-5 Image rejection ratio

CH 2 ～ 13	50(40) dB MIN
CH J ～ W+11	50(40) dB MIN
CH W+12 ～ 69	50(40) dB MIN
	( ) ; AGC Range 0 ～ -30 dB

11-6 IF rejection ratio

CH 2 ～ B	50(45) dB MIN
CH C ～ W+11	60(50) dB MIN
CH W+12 ～ 69	70(40) dB MIN
	( ) ; AGC Range 0 ～ -30 dB

11-7 1% cross modulation

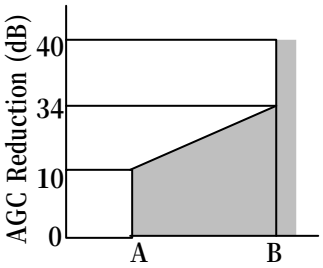

Undesire Level (mVrms)
75 or 50Ω open

VHF	A :	5 mV
	B :	70 mV
CATV	A :	3 mV
	B :	70 mV
UHF	A :	5 mV
	B :	50 mV

11-8 FM rejection ratio

CH 7 ～ 13	60 dB MIN
CH 5	40 dB MIN (*1)

*1. Des : 5 CH (77.25 MHz) 60 dBμ 75Ω open
Und : 89.1 MHz
s/i = 30 dB
Rej = s/i + (-D/U)

11-9 Input signal level at 10 % distortion

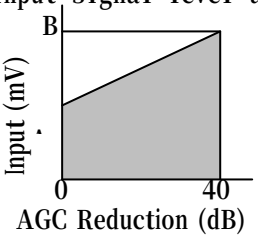

VHF	A :	3 mV
(75Ω open rms)	B :	300 mV
UHF	A :	3 mV
(50Ω open rms)	B :	300 mV

11-10 VHF,UHF rejection ratio

VHF	70 dB MIN
UHF	50 dB MIN

11-11 1/2 IF harmonic rejection ratio

UHF	45 dB MIN

11-12 Inter modulation

VHF	45 dB MIN

11-13 Drift of oscillation frequency

By ± 1 % change of +B voltage

VHF	± 250 KHz MAX
UHF	± 250 KHz MAX

By ± 25 ℃ change from 25 ℃

CH 2 ～ 13	±2000 KHz MAX
CH J ～ W+11	±4000 KHz MAX
CH W+12 ～ 69	±4000 KHz MAX

11-14 Local oscillator voltage on the aerial input terminals

300 MHz MAX	34 dBμ V MAX
300 ～ 1000 MHz	50 dBμ V MAX
1000 ～ 1694 MHz	51.7 dBμ V MAX

11-15 CH 6 Beat

40 dBμ MIN

11-16 CH A-5 Beat

40 dBμ MIN

13. Country origin

SANYO Tuner Industries Co., LTD.(JAPAN)
GuangDong Foshan Optoelectronic Equip.Corp.(CHINA)
SANYO Jaya Components Indonesia (INDONESIA)

USA CHANNEL FREQUENCY TABLE(181CH)

P IF=45.75MHz
C IF=42.17MHz
S IF=41.25MHz

UNIT:MHz

	CHANNEL	P CARRIER	S CARRIER	LOCAL
VHF Low	2	55.25	59.75	101
	3	61.25	65.75	107
	4	67.25	71.75	113
	5	77.25	81.75	123
	6	83.25	87.75	129
	A-6	85.25	89.75	131
	A-5	91.25	95.75	137
	A-4	97.25	101.75	143
	A-3	103.25	107.75	149
	A-2	109.25	113.75	155
	A-1	115.25	119.75	161
	A	121.25	125.75	167
	B	127.25	131.75	173
VHF High	C	133.25	137.75	179
	D	139.25	143.75	185
	E	145.25	149.75	191
	F	151.25	155.75	197
	G	157.25	161.75	203
	H	163.25	167.75	209
	I	169.25	173.75	215
	7	175.25	179.75	221
	8	181.25	185.75	227
	9	187.25	191.75	233
	10	193.25	197.75	239
	11	199.25	203.75	245
	12	205.25	209.75	251
	13	211.25	215.75	257
	J	217.25	221.75	263
	K	223.25	227.75	269
	L	229.25	233.75	275
	M	235.25	239.75	281
	N	241.25	245.75	287
	O	247.25	251.75	293
	P	253.25	257.75	299
	Q	259.25	263.75	305
	R	265.25	269.75	311
	S	271.25	275.75	317
	T	277.25	281.75	323
	U	283.25	287.75	329
	V	289.25	293.75	335
	W	295.25	299.75	341
	W+1	301.25	305.75	347
	W+2	307.25	311.75	353
	W+3	313.25	317.75	359
	W+4	319.25	323.75	365
	W+5	325.25	329.75	371
	W+6	331.25	335.75	377
	W+7	337.25	341.75	383
	W+8	343.25	347.75	389
	W+9	349.25	353.75	395
	W+10	355.25	359.75	401

BAND	CHANNEL	P CARRIER	S CARRIER	LOCAL
	W+11	361.25	365.75	407
UHF	W+12	367.25	371.75	413
	W+13	373.25	377.75	419
	W+14	379.25	383.75	425
	W+15	385.25	389.75	431
	W+16	391.25	395.75	437
	W+17	397.25	401.75	443
	W+18	403.25	407.75	449
	W+19	409.25	413.75	455
	W+20	415.25	419.75	461
	W+21	421.25	425.75	467
	W+22	427.25	431.75	473
	W+23	433.25	437.75	479
	W+24	439.25	443.75	485
	W+25	445.25	449.75	491
	W+26	451.25	455.75	497
	W+27	457.25	461.75	503
	W+28	463.25	467.75	509
	W+29	469.25	473.75	515
	14	471.25	475.75	517
	15	477.25	481.75	523
	16	483.25	487.75	529
	17	489.25	493.75	535
	18	495.25	499.75	541
	19	501.25	505.75	547
	20	507.25	511.75	553
	21	513.25	517.75	559
	22	519.25	523.75	565
	23	525.25	529.75	571
	24	531.25	535.75	577
	25	537.25	541.75	583
	26	543.25	547.75	589
	27	549.25	553.75	595
	28	555.25	559.75	601
	29	561.25	565.75	607
	30	567.25	571.75	613
	31	573.25	577.75	619
	32	579.25	583.75	625
	33	585.25	589.75	631
	34	591.25	595.75	637
	35	597.25	601.75	643
	36	603.25	607.75	649
	37	609.25	613.75	655
	38	615.25	619.75	661
	39	621.25	625.75	667
	40	627.25	631.75	673
	41	633.25	637.75	679
	42	639.25	643.75	685
	43	645.25	649.75	691
	44	651.25	655.75	697
	45	657.25	661.75	703

USA CHANNEL FREQUENCY TABLE(181CH)

P IF=45.75MHz
C IF=42.17MHz
S IF=41.25MHz
UNIT:MHz

	CHANNEL	P CARRIER	S CARRIER	LOCAL
UHF	46	663.25	667.75	709
	47	669.25	673.75	715
	48	675.25	679.75	721
	49	681.25	685.75	727
	50	687.25	691.75	733
	51	693.25	697.75	739
	52	699.25	703.75	745
	53	705.25	709.75	751
	54	711.25	715.75	757
	55	717.25	721.75	763
	56	723.25	727.75	769
	57	729.25	733.75	775
	58	735.25	739.75	781
	59	741.25	745.75	787
	60	747.25	751.75	793
	61	753.25	757.75	799
	62	759.25	763.75	805
	63	765.25	769.75	811
	64	771.25	775.75	817
	65	777.25	781.75	823
	66	783.25	787.75	829
	67	789.25	793.75	835
	68	795.25	799.75	841
	69	801.25	805.75	847

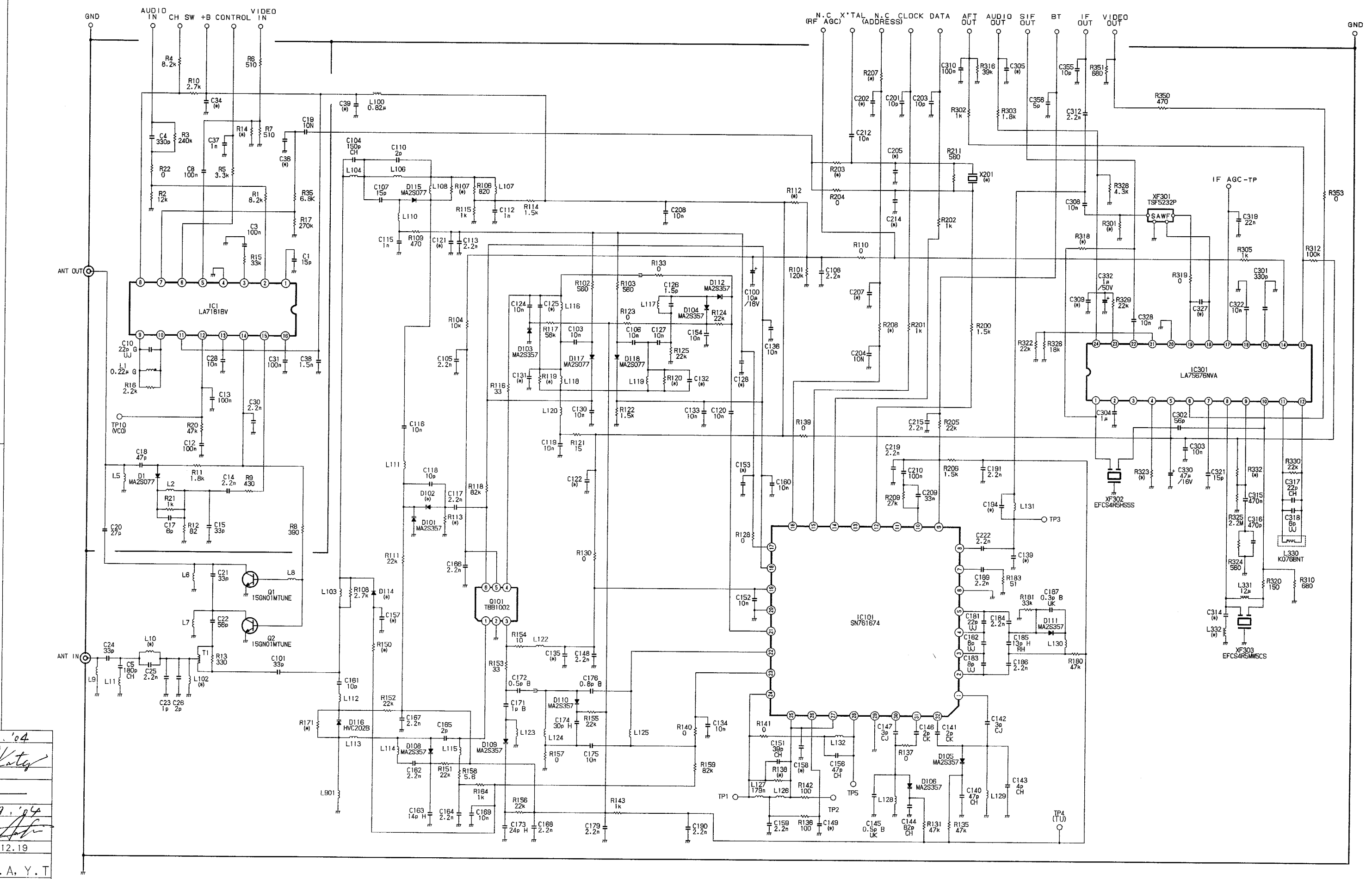

Jan. 9. '04 APPROVED	
CHKD	
Jan. 9. '04 CHKD	
2003.12.19	
DESIGNED	T.M, A.A, Y.T
2004.01.07	
DRAWN	Y.ABE
2004.01.07	
DRAW. ID	VHA35ASEF

MK	DATE	REVISION	SUB SEC

SANYO SANYO Tuner Industries Co., Ltd.

ORIGINAL MODEL

PART NAME: TUNER RF/IF/IF

PART CODE: 115VHA35ASMEO

OVP 1.ASV, F FRMVC2105,
2.ASV, CACOMVC4201, A
3.ASV, CBCOMVC4301, B
4.ASV, VHA35ASME- AWAKU

NOTE: DO NOT SCALE

APPEARANCE & DIMENSIONS

TERMINALS LAYOUT	
1	N. C
2	N. C
3	+B
4	N. C
5	N. C
6	
7	N. C (RF AGC-TP)
8	X' TAL
9	N. C (ADDRESS)
10	CLOCK
11	DATA
12	AFT OUT
13	AUDIO OUT
14	SIF OUT
15	BT
16	IF OUT
17	VIDEO OUT

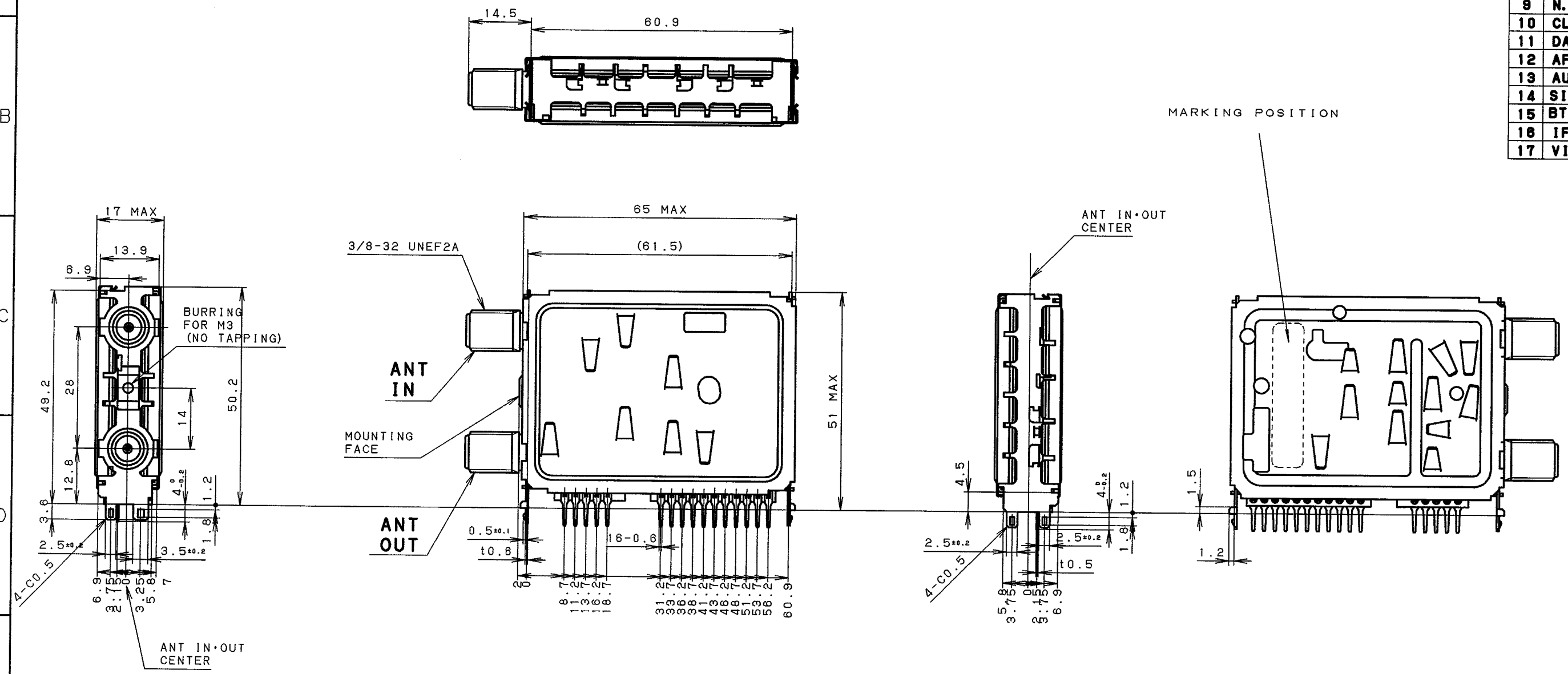

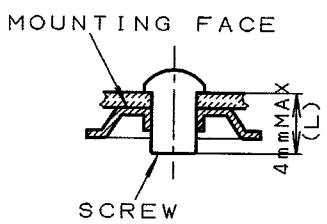

*THE LENGTH OF SCREW (L) IS 4mm MAX

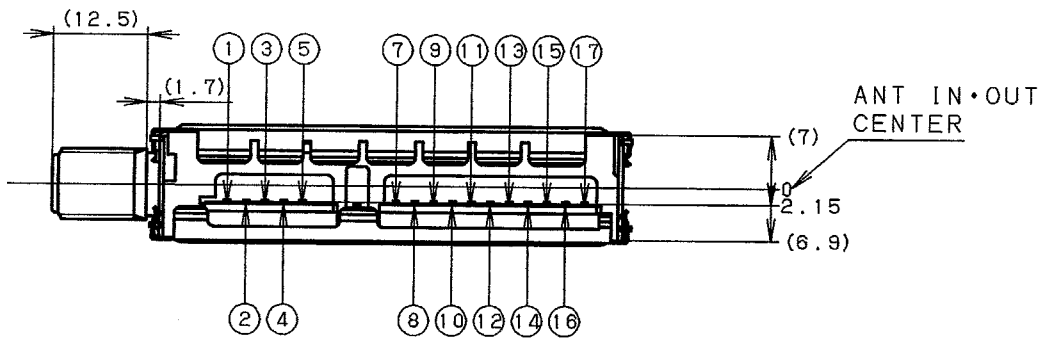

APPROVED	Jan. 9. '04
CHECKED	'04. 1. 8
CHECKED	04.01.08
DESIGNED	A. AOCHI 04.01.08
DRAWN	M. YOSHIMURA

MK	DATE	REVISION

SCALE 1:1	UNIT mm	CUST.'S PART NO.
TOLERANCE		SANYO'S MODEL NO. 115VHA35ASME○
ANGLE	OVR ±	
HOLE	~ ± / 100 UND ±0.5	NAME TUNER, RF/TU/IF
		DRAW. ID/FILE ASV, VHA35ASME-, / PLOT DATE 04.01.08

SANYO

SANYO Tuner Industries Co., Ltd.