SAMSUNG

RFD01P Series Installation Manual

Describes product installation and requirement procedure.

Document Version 2.0
September 2017

Radio Access Network

Document Number: 2600-00KMACGAA

© 2017 SAMSUNG Electronics Co., Ltd.

All Rights Reserved. The contents of this document/presentation contain proprietary information that must be kept confidential. No part of this document shall be photocopied, reproduced, stored in a retrieval system, or transmitted, in any form or by any means whether, electronic, mechanical, or otherwise without the prior written permission of SAMSUNG Electronics Co., Ltd.

No warranty of accuracy is given concerning the contents of the information contained in this publication. To the extent permitted by law no liability (including liability to any person by reason of negligence) will be accepted by SAMSUNG Electronics Co., Ltd., its subsidiaries or employees for any direct or indirect loss or damage caused by omissions from or inaccuracies in this document. SAMSUNG Electronics Co., Ltd. reserves the right to change details in this publication without notice.

SNMTC-v3-0312

This manual should be read and used as a guideline for properly installing and/or operating the product. Owing to product variations across the range, any illustrations and photographs used in this manual may not be a wholly accurate depiction of the actual products you are using.
This manual may be changed for system improvement, standardization and other technical reasons without prior notice.

Samsung Networks documentation is available at **http://www.samsungdocs.com**

Copyright © 2017, All Rights Reserved.

Contents

Preface **ix**

Conventions in this Document ix
New and Changed Information x
Revision History x
Organization of This Document x
Related Documentation x
Personal and Product Safety xi
Equipment Markings xv

Chapter 1 Before Installation **1**

System View and External Interface 1
RRH View 1
RRH External Interface 2
Specifications 4
Cautions for Installation 5
Before Installing 5
While Installing 5
After Installing 6
Installation Tools 7

Chapter 2 Installing System **10**

Installation Procedure 10
System Arrangement 11
Unpacking and Transporting 15
Bringing in Items 15
Unpacking Items 15
RRH Handling 16
Fixing RRH 17
Fixing Finger Guard 17
Fixing Unit Bracket 19
Assembling 3 Sector Mounting Bracket Assembly_Front 22
Fixing Pole Type 24
Fixing Wall Type 39

Chapter 3 Connecting Cables **53**

Cabling Procedure 53
Guidelines for Cable Connections 54
Cable Path Inspection 54
Cable Cutting 55
Cable Installation 55
Cable Binding 56
Connector Attachment 56
Identification Tag Attachment 57
Cabling Diagram 58
Grounding 59
Connecting Ground Cable 59
Power Cabling 62
Connecting Power Cable 63

Copyright © 2017, All Rights Reserved.

Interface Cable Connection 66
Remove/Insert Optical Module 66
Connecting CPRI Cable 67
Connecting UDA Cable 74
Connecting RET Cable 78
Connecting Cable 81

Chapter 4 Inspect the Installation 86

Appendix A Acronyms 91

Appendix B Sector Antenna Installation 92
Cautions when Installing a Sector Antenna 92
Sector Antenna Installation 93

Appendix C Clean the Optical Connectors 94
Introduction 94
Measure the Optical Output and Connecting the Optical Connector 94

Appendix D Standard Torque 96

Copyright © 2017, All Rights Reserved.

List of Figures

Figure 1. RRH View (without Finger Guard) 1
Figure 2. RRH View (with Finger Guard) 2
Figure 3. RRH External Interface 3
Figure 4. Procedure to Install the RRH 10
Figure 5. RRH Arrangement_1 Sector Pole Type Installation 11
Figure 6. RRH Arrangement_3 Sector Pole Type Installation 12
Figure 7. RRH Arrangement_1 Sector Wall Type Installation 13
Figure 8. RRH Arrangement_3 Sector Wall Type Installation 14
Figure 9. Using a Handle to transport an RRH 16
Figure 10. Finger Guard Fixing (1) 17
Figure 11. Finger Guard Fixing (2) 18
Figure 12. Fixing Unit Bracket_Standard Installation 20
Figure 13. Fixing Unit Bracket_Side Installation (1) 21
Figure 14. Fixing Unit Bracket_Side Installation (2) 22
Figure 15. Assembling 3 Sector Mounting Bracket Assembly_Front (1) 23
Figure 16. Assembling 3 Sector Mounting Bracket Assembly_Front (2) 23
Figure 17. Assembling 3 Sector Mounting Bracket Assembly_Front (3) 24
Figure 18. Assembling Mounting Bracket_1 Sector Pole Type (1) 25
Figure 19. Assembling Mounting Bracket_1 Sector Pole Type (2) 26
Figure 20. Assembling Mounting Bracket_3 Sector Pole Type (1) 27
Figure 21. Assembling Mounting Bracket_3 Sector Pole Type (2) 28
Figure 22. Lifting RRH & Mounting Bracket Assembly_Pole Type 29
Figure 23. Lifting RRH & Mounting Bracket Assembly_Pole Type 30
Figure 24. Fixing Mounting Bracket Assembly_1 Sector Pole Type (1) 31
Figure 25. Fixing Mounting Bracket Assembly_1 Sector Pole Type (2) 32
Figure 26. Leveling Mounting Bracket Assembly_1 Sector Pole Type 32
Figure 27. Fixing Mounting Bracket Assembly_3 Sector Pole Type (1) 33
Figure 28. Fixing Mounting Bracket Assembly_3 Sector Pole Type (2) 34
Figure 29. Leveling Mounting Bracket Assembly_3 Sector Pole Type 34
Figure 30. Fixing RRH_1 Sector Pole Type (Standard Installation) 35
Figure 31. Fixing RRH_1 Sector Pole Type (Side Installation) 36
Figure 32. Fixing RRH_3 Sector Pole Type (1) 38
Figure 33. Fixing RRH_3 Sector Pole Type (2) 38
Figure 34. RRH marking dimensions_1 Sector Wall Type 40
Figure 35. RRH marking dimensions_3 Sector Wall Type 41
Figure 36. Marking_Wall Type 42
Figure 37. Drilling & Anchoring 43
Figure 38. Fixing Mounting Bracket_1 Sector Wall Type 45
Figure 39. Fixing Mounting Bracket_3 Sector Wall Type (Standard Installation) 46
Figure 40. Fixing Mounting Bracket_3 Sector Wall Type (Side Installation) 47
Figure 41. Fixing RRH_1 Sector Wall Type (Standard Installation) 48
Figure 42. Fixing RRH_1 Sector Pole Type (Side Installation) 48
Figure 43. Fixing RRH_3 Sector Wall Type (Standard Installation 1) 50
Figure 44. Fixing RRH_3 Sector Wall Type (Standard Installation 2) 50
Figure 45. Fixing RRH_3 Sector Wall Type (Side Installation 1) 52
Figure 46. Fixing RRH_3 Sector Wall Type (Side Installation 2) 52
Figure 47. Procedure to Connect System Cable 53

Copyright © 2017, All Rights Reserved.

Figure 48. Cable Connection Procedure 54
Figure 49. Cable Diagram 58
Figure 50. Connecting Ground Cable (1) 60
Figure 51. Connecting Ground Cable (2) 61
Figure 52. Power Equipment Elements 62
Figure 53. Connecting Power Cable (1) 64
Figure 54. Connecting Power Cable (2) 64
Figure 55. Optical Module Removal (1) 66
Figure 56. Optical Module Removal (2) 66
Figure 57. Optical Module Removal (3) 66
Figure 58. Optical Module Inset 67
Figure 59. The method for configuring the CPRI Cable's cascade 68
Figure 60. Connecting CPRI Cable_Cascade connection-oriented (1) 69
Figure 61. Connecting CPRI Cable_Cascade connection-oriented (2) 69
Figure 62. Connecting CPRI Cable_Cascade connection-oriented (3) 70
Figure 63. Connecting CPRI Cable_Cascade connection-oriented (4) 70
Figure 64. Connecting CPRI Cable_Cascade connection-oriented (5) 71
Figure 65. Connecting CPRI Cable_Cascade connection-oriented (6) 71
Figure 66. Connecting CPRI Cable_Cascade end-oriented (1) 73
Figure 67. Connecting CPRI Cable_Cascade end-oriented (2) 74
Figure 68. Connecting UDA Cable (1) 75
Figure 69. Connecting UDA Cable (2) 75
Figure 70. Connecting UDA Cable (3) 76
Figure 71. Connecting UDA Cable (4) 76
Figure 72. Connecting UDA Cable (5) 77
Figure 73. Connecting UDA Cable (6) 77
Figure 74. Connecting RET Cable (1) 79
Figure 75. Connecting RET Cable (2) 80
Figure 76. Connecting RET Cable (3) 80
Figure 77. Connecting RET Cable (4) 81
Figure 78. Connecting RF Cable (1) 82
Figure 79. Connecting RF Cable (2) 83
Figure 80. Connecting RF Cable (3) 84
Figure 81. Installation Inspection Procedure 86
Figure 82. Sector Antenna 93

Copyright © 2017, All Rights Reserved.

List of Tables

Table 1. Specifications 4
Table 2. Basic Installation Tools 7
Table 3. Parts and Tools for fixing Finger Guard 17
Table 4. Parts and Tools for fixing Unit Bracket (Standard Installation) 19
Table 5. Parts and Tools for fixing Unit Bracket (Side Installation) 20
Table 6. Parts and Tools for assembling 3 Sector Mounting Bracket Assembly_Front 23
Table 7. Parts and Tools for assembling Mounting Bracket_1 Sector Pole Type 24
Table 8. Parts and Tools for assembling Mounting Bracket_3 Sector Pole Type 26
Table 9. Mounting Bracket type per installation type and sector type_Pole Type 30
Table 10. Parts and Tools for fixing Mounting Bracket Assembly_1 Sector Pole Type 31
Table 11. Parts and Tools for fixing Mounting Bracket Assembly_3 Sector Pole Type 33
Table 12. Fixing RRH_1 Sector Pole Type (Standard & Side Installation) 35
Table 13. Parts and Tools for fixing RRH_3 Sector Pole Type 36
Table 14. Tools for Marking 39
Table 15. Parts and Tools for Drilling & Anchoring 42
Table 16. Anchor Bolt Drill Bits and Hole Depth 42
Table 17. Mounting Bracket type per installation type and sector type_Wall Type 43
Table 18. Parts and Tools for fixing Mounting Bracket_1 Sector Wall Type 44
Table 19. Parts and Tools for fixing Mounting Bracket_3 Sector Wall Type (Standard Installation) 45
Table 20. Parts and Tools for fixing Mounting Bracket_3 Sector Wall Type (Side Installation) 46
Table 21. Parts and Tools for fixing RRH_1 Sector Wall Type (Standard & Side Installation) 47
Table 22. Parts and Tools for fixing RRH_3 Sector Wall Type (Standard Installation) 49
Table 23. Parts and Tools for fixing RRH_3 Sector Wall Type (Side Installation) 50
Table 24. Recommended Minimum Allowed Cable bend Radius 55
Table 25. RRH Connection Cable 58
Table 26. Parts and Tools for connecting Ground Cable 59
Table 27. Parts and Tools for connecting Power Cable 63
Table 28. Power Cable/Connector Pin Map 63
Table 29. Parts and Tools for connecting CPRI Cable_Cascade connection-oriented 68
Table 30. Parts and Tools for connecting CPRI Cable_Cascade end-oriented 72
Table 31. Parts and Tools for connecting UDA Cable 74
Table 32. UDA Cable Pin Map 74
Table 33. Parts for connecting RET Cable 78
Table 34. RET Cable Pin Map 79
Table 35. RF Cable Minimum Radius of Curvature 81
Table 36. Parts and Tools for connecting RF cable 81
Table 37. RF Cable Identification Tag 85
Table 38. Construction Situation Check list 87
Table 39. Standard Torque Value for Fastening Bolts 96
Table 40. Brass Bolts Torque Value 96
Table 41. Connector Connection Torque Value 96

Copyright © 2017, All Rights Reserved.

Preface

This manual describes how to install the 700 MHz RRH including how to connect cables. This manual includes the following 700 MHz RRH:

- RFD01P Series

Conventions in this Document

Samsung Networks product documentation uses the following conventions.

Symbols

Symbol	Description
	Indicates a task.
	Indicates a shortcut or an alternative method.
	Provides additional information.
	Provides information or instructions that you should follow to avoid service failure or damage to equipment.
	Provides information or instructions that you should follow to avoid personal injury or fatality.
	Provides antistatic precautions that you should observe.

Menu Commands

menu | command

This indicates that you must select a command on a menu, where **menu** is the name of the menu, and **command** is the name of the command on that menu.

File Names and Paths

These are indicated by a bold typeface. For example:

Copy **filename.txt** into the **/home/folder1/folder2/bin/** folder.

User Input and Console Screen Output Text

Input and output text is presented in the Courier font. For example,

```
context <designated epc-context-name>
```

CLI commands are presented in bold small caps. For example,

Type the **RTRV-NE-STS** command in the input field.

Copyright © 2017, All Rights Reserved.

New and Changed Information

This section describes information that has been added/changed since the previous publication of this manual.

- Changed UDA cable pin map (Table 32 UDA Cable Pin Map)

Revision History

The following table lists all versions of this document.

Document Version	Publication Date	Remarks
1.0	May 2017	-
2.0	September 2017	-

Organization of This Document

Section	Title	Description
Chapter 1	Before Installation	This chapter introduces RRH and describes items should be understood before installation.
Chapter 2	Installing System	This chapter describes the procedures to install the RRH.
Chapter 3	Connecting Cables	This chapter describes the procedures to connect the cables to the RRH installed.
Chapter 4	Inspect the Installation	This chapter describes the procedures of inspecting installation status after RRH installation and cabling is completed.
Appendix A	Acronyms	This annex describes the acronyms used in this manual.
Appendix B	Sector Antenna Installation	This annex describes the sector antenna installation.
Appendix C	Clean the Optical Connectors	This annex describes the procedure of cleaning the optical connector and cleaning tool.
Appendix D	Standard Torque	This annex describes the standard torque when fastening the bolt.

Related Documentation

- LTE eNB System Description

Copyright © 2017, All Rights Reserved.

Personal and Product Safety

This product safety information includes European directives, which you must follow. If these do not apply in your country, please follow similar directives that do apply in your country.

Proposition 65 Warning (US Only)

State of California Proposition 65 Warning (US only)

WARNING: This product contains chemicals known to the State of California to cause cancer and birth defects or other reproductive harm.

Electrical

The product is designed to operate from a -48 V DC supply and is therefore classified as Safe Extra Low Voltage (SELV) equipment.

All structural parts are grounded and all input and outputs have built-in isolation from the network. All input and output ports that connect to external power sources are designed to meet relevant national safety requirements.

The product contains hazardous energy levels as defined by EN 60950. Care must be taken when maintaining this equipment as injury to personnel or damage to the equipment could result from mistakes. Maintenance should only be carried out by trained and competent engineers who are familiar with the relevant procedures and instructions.

Lasers

The product is fitted with optic modules rated as Class 1 radiation-emitting devices under EN 60825-1. During installation, operation, and maintenance, never look into the end of an optical fiber directly or by reflection either with the naked eye or through an optical instrument. Do not operate equipment with exposed fiber connectors-cover these with fiber cables or blanking caps. Do not remove equipment covers during operation unless requested to do so in the documentation. Carry out normal safety precautions when trimming fibers during installation.

Manual Handling

Care should be taken when handling equipment. Give due consideration to the weight of the equipment, the physical capability of the individual(s) handling the equipment, and movements such as twisting, bending and stooping, which could lead to skeletal and muscular injuries.

Installation

Installation must be carried out by trained and competent engineers only. All relevant safety measures should be taken to ensure equipment is not connected to

Copyright © 2017, All Rights Reserved.

live power and transmission sources during installation. Equipment must be correctly installed in order to meet the relevant safety standards and approval conditions.

Each power feed to the unit requires a separate fused feed from the provided power supply. The cable between the power distribution point and the installed equipment must have a minimum cross-sectional area of 2.5 mm^2.

Rack-mountable equipment must be placed in a standard 19-inch rack and secured with the appropriate fixings as detailed in the installation manual.

Maintenance

Maintenance must only be carried out by a suitably trained and competent technician. All safety instructions must be carefully observed at all times. Equipment covers should not be removed while live power and transmission is connected unless in a controlled environment by trained technicians.

Fire

The product is powered from a -48 V DC supply. To protect against fire, the equipment is fused.

Environment

The product must be operated in an environment with the specified relative humidity and ambient temperature ranges.

Keep all liquids away from the equipment as accidental spillage can cause severe damage.

Cooling

The product cools down by its own set of cooling fans housed in a fan module. Each fan module detects a fan that is not operating normally. LEDs on the front panel of the fan module provide an alarm indication in the event of fan failure.

In the event of fan failure, take urgent remedial action to restore full cooling capacity.

Take appropriate measures to ensure that fan modules do not start spinning during repair and maintenance procedures.

Anti-Static Precautions

The circuit boards and other modules in the product are sensitive to and easily damaged by static electricity. If any card or sub-assembly is removed from the unit, the following anti-static precautions must be observed at all times:

- Service personnel must wear anti-static wrist straps.
- Circuit boards and sub-assemblies must be placed on ground conductive mats

Copyright © 2017, All Rights Reserved.

or in conductive bags.

- All tools must be discharged to ground before use.
- The anti-static wrist strap and cord must be checked at regular intervals for their suitability for use.

Grounding

To comply with EN 60950, the equipment must be connected to a safety grounding point via a permanent link. Grounding points are located on the product for this purpose. Always connect the ground cable before fitting other cables. The product must remain grounded continuously unless all connections to the power supply and data network are all removed.

If equipment is grounded through a cabinet or rack, make sure it is done so properly according to the installation instructions.

Power Supply Connection

The equipment is designed to be powered from a -48 V DC supply. Power connections and installation of associated wiring must be carried out by a suitably qualified technician.

Only devices that comply with all relevant national safety requirements should be connected to the unit's power supply inlets. Other usage will invalidate any approval given to this equipment.

Connection of this equipment to devices that are not marked with all relevant national safety requirements may produce hazardous conditions on the network.

When the power supply is obtained by a rectifier/safety isolation transformer, the supply must meet the requirements of EN 60950 providing double/reinforced insulation between hazardous voltages and SELV/TNV circuits. Any battery must be separated from hazardous voltages by reinforced insulation.

Indirect Connection

Before indirectly connecting any equipment to another device through a shared power supply, ALWAYS seek advice from a competent engineer.

Devices that are not marked according to the relevant national safety standards may produce hazardous conditions on the network.

Product Disposal

To reduce the environmental impact of products, Samsung has joined WEEE compliance activities.

The WEEE symbol on the product indicates that the product is covered by the European Directive 2002/96/CE for the disposal of Waste Electrical and Electronic Equipment (WEEE). This means that the product should be disposed of separately from the municipal waste stream via designated collection facilities appointed by

Copyright © 2017, All Rights Reserved.

the government or the local authorities. This will help prevent potential negative consequences for the environment and human health. Please check the terms and conditions of the purchase contract for information about correct disposal.

Battery Disposal

The product contains a battery on the processor card. The battery should not be disposed of with other household waste. Where marked, the chemical symbols Hg, Cd or Pb indicate that the battery contains mercury, cadmium or lead above the reference levels in EC Directive 2006/66. The battery incorporated in this product is not user replaceable. For information on its replacement, please contact your service provider. Do not attempt to remove the battery or dispose it in a fire. Do not disassemble, crush, or puncture the battery.

End of life recycling materials information is available from Samsung.

California USA Only

This Perchlorate warning applies only to primary CR (Manganese Dioxide) Lithium coin cells in the product sold or distributed ONLY in California USA

‘Perchlorate Material-special handling may apply, See www.dtsc.ca.gov/hazardouswaste/perchlorate.’

FCC Part 15.105 Statement

This equipment has been tested and found to comply with the limits for a Class B digital device, pursuant to part 15 of the FCC Rules.

These limits are designed to provide reasonable protection against harmful interference in a residential installation. This equipment generates, uses and can radiate radio frequency energy and, if not installed and used in accordance with the instructions, may cause harmful interference to radio communications. However, there is no guarantee that interference will not occur in a particular installation. If this equipment does cause harmful interference to radio or television reception, which can be determined by turning the equipment off and on, the user is encouraged to try to correct the interference by one or more of the following measures:

- Reorient or relocate the receiving antenna.
- Increase the separation between the equipment and receiver.
- Connect the equipment into an outlet on a circuit different from that to which the receiver is connected.
- Consult the dealer or an experienced radio/TV technician for help.

Copyright © 2017, All Rights Reserved.

Equipment Markings

This marking on the product, accessories or literature indicates that the product and its electronic accessories (e.g. charger, headset, USB cable) should not be disposed of with other household waste at the end of their working life. To prevent possible harm to the environment or human health from uncontrolled waste disposal, please separate these items from other types of waste and recycle them responsibly to promote the sustainable reuse of material resources.

Household users should contact either the retailer where they purchased this product, or their local government office, for details of where and how they can take these items for environmentally safe recycling.

Business users should contact their supplier and check the terms and conditions of the purchase contract. This product and its electronic accessories should not be mixed with other commercial wastes for disposal.

Correct disposal of batteries in this product
(Applicable in countries with separate collection systems.)

The marking on the battery, manual or packaging indicates that the battery in this product should not be disposed of with other household waste. Where marked, the chemical symbols Hg, Cd or Pb indicate that the battery contains mercury, cadmium or lead above the reference levels in EC Directive 2006/66.

The battery incorporated in this product is not user replaceable. For information on its replacement, please contact your service provider. Do not attempt to remove the battery or dispose it in a fire. Do not disassemble, crush, or puncture the battery. If you intend to discard the product, the waste collection site will take the appropriate measures for the recycling and treatment of the product, including the battery.

Protective earth

RRH should be grounded.

Copyright © 2017, All Rights Reserved.

Chapter 1 Before Installation

System View and External Interface

RRH View

The View of RRH is as follows.

Figure 1. RRH View (without Finger Guard)

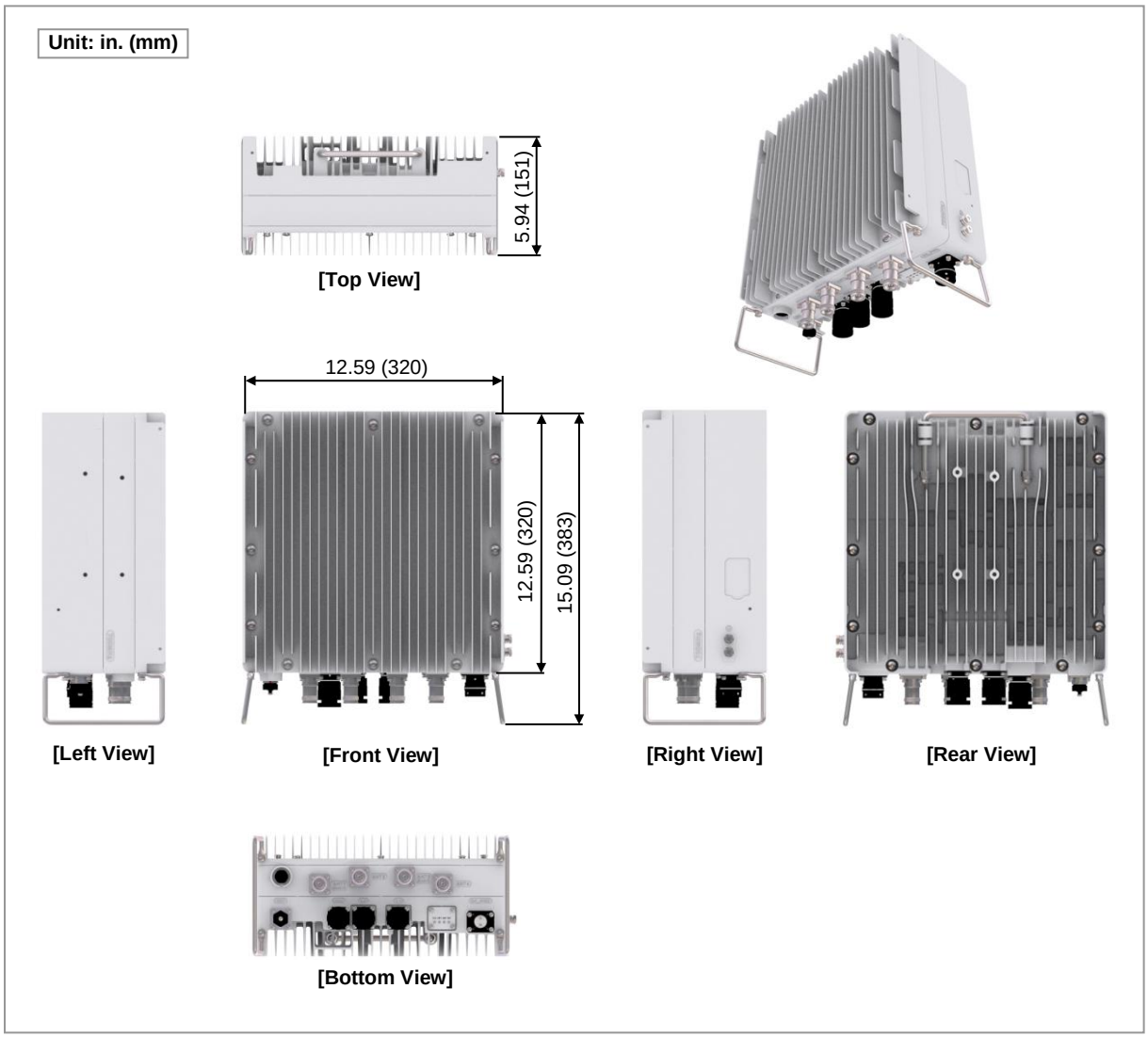

Copyright © 2017, All Rights Reserved.

Figure 2. RRH View (with Finger Guard)

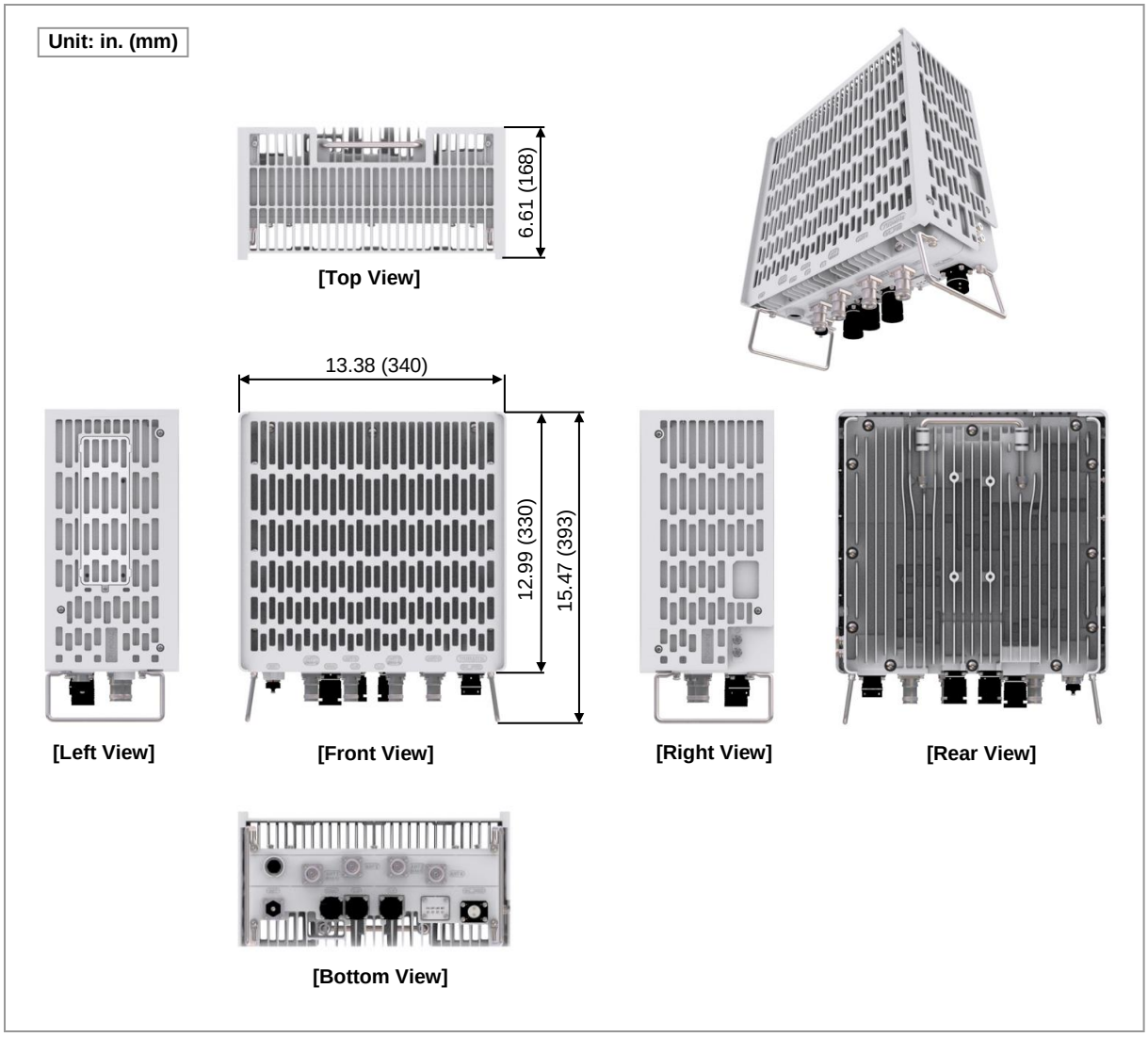

RRH External Interface

The external interface structure of RRH is as follows.

Copyright © 2017, All Rights Reserved.

Figure 3. RRH External Interface

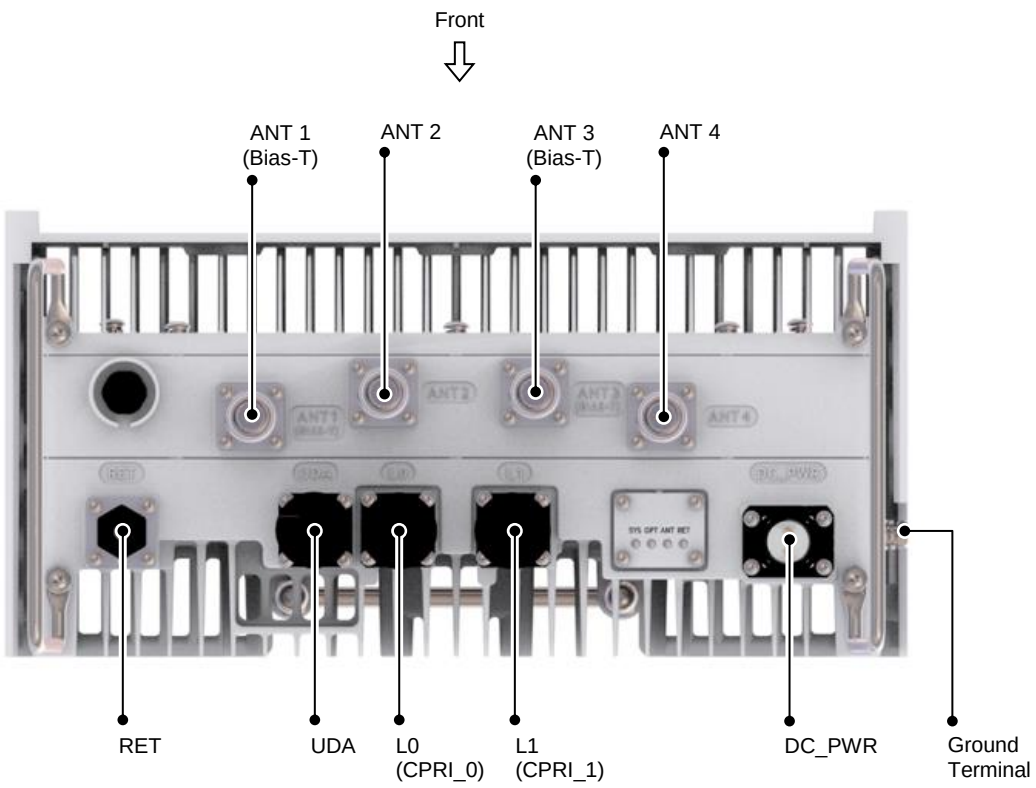

[Bottom View]

Copyright © 2017, All Rights Reserved.

Specifications

The table below lists the main specifications of the RRH.

Table 1. Specifications

Item	RRH
Technology	3GPP Rel. 13
Duplex type	FDD
Operating Frequency	• DL: 746 to 756 MHz • UL: 777 to 787 MHz
Channel Bandwidth	10 MHz 2Tx2Rx/2Tx4Rx/4Tx4Rx per RRH
Input Voltage	-48 V DC (-38~-57 V DC)
Input Current (Max)	18 A
Dimension (in./mm)	• without Finger Guard: 12.59/320 (W) × 5.94/151 (D) × 12.59/320 (H) • with Finger Guard: 12.59/340 (W) × 6.61/168 (D) × 12.99/330 (H)
Weight	Approx. 17 kg
Operating Temperature (Ambient)	-40°C~55°C (without solar load)
Operating Humidity	5~100 % RH, condensing, not to exceed 30 g/m^3 absolute humidity
Altitude (m)	-60~1,800 (Telcordia GR-63-CORE)
Earthquake	Telcordia Earthquake Risk Zone4 (Telcordia GR-63-CORE)
Vibration	• Office Vibration (Section 4.4.4) • Transportation Vibration (Section 4.4.5)
Noise	Fanless (natural convection cooling)
EMC	FCC Title 47 CFR Part 15
Safety	UL 60950-1 2nd Ed.
RF	FCC Title 47 CFR Part 27

Copyright © 2017, All Rights Reserved.

Cautions for Installation

Observe the following safety instructions when installing the system:

Installation shall be in accordance with the applicable local electric codes.

Before Installing

- Post warning signs in areas where high-voltage cables are installed.
- Post ‘off limit’ signs in areas where accidents are most expected.
- With guardrails or fences, block open areas such as connecting parts, roof, and scaffold.

Install the system in the Restrict Access Area.

While Installing

- The system power must be cut off before installing.
- Be careful not to damage or scratch the boards mounted on the system and the cables among the boards when the system is transported or installed.

Make sure the power switch of power supply is off when installing the system. Installing the system with power switch on may cause system damage or fatal human injury when cables are not correctly connected.

Make sure that worker wears protection gloves and goggles to prevent damage from debris while drilling holes in a wall or ceiling.

Do not wear accessories such as watches and rings in order to prevent electrical shock.

Never allow foreign substances to be inserted into unused ports by covering them with a cap.

To prevent foreign substances, outdoor air and moisture from entering the cable inlet (including cable gland and conduit), finish it as follows:
- Unused inlet
Use the hole finishing materials including cap and rubber packing.
- Cable-installed inlet
After cable installation, block any space in the inlet with tape, compressed sponge, rubber packing, and silicon.

Copyright © 2017, All Rights Reserved.

After Installing

Remove any debris produced during the work and clean up the installation site.

In the system, the laser beam light runs through the optical cable. Handle the optical cables with care as the laser beam can seriously damage the worker's eyes.

Make sure that worker does not damage installed cables while cleaning the system.

While cleaning the power supply device, take caution that the device does not come in contact with foreign objects that may cause power failure.

Copyright © 2017, All Rights Reserved.

Installation Tools

The basic tools for installation are listed in the table below. The additional tools required for each site need to be identified and prepared during a site survey before starting installation.

Table 2. Basic Installation Tools

No.	Name	Specification	Purpose of use
1	Torque Driver	Apply a torque range : 6~22 lbf·in	For fastening finger guard (M4)
		Apply a torque range : 20~90 lbf·in	For fastening RRH ground pressure terminal (M6)
2	Screw Driver Bit	'+', No. 2	For fastening finger guard (M4)
		'+', No. 3	For fastening RRH ground pressure terminal (M6)
3	Screw Driver	'+', No. 2	For loosening M3, M4 screw
		'+', No. 3	For loosening M6 screw
4	Torque Wrench	Apply a torque range : 10~50 lbf·in	For tightening M6 Hex.Bolt and RF connector of system (4.3-10 Type)
		Apply a torque range : 100~400 lbf·in	For tightening M10 Hex.Bolt and RF connector of antenna (DIN Type)
5	Torque Wrench Spanner Head	Apply Hex. Bolt Head: 10 mm (for 10~50 lbf·in)	For tightening M6 Hex.Bolt
		Apply Hex. Bolt Head: 17 mm (for 100~400 lbf·in)	For tightening M10 Hex.Bolt
		Apply Hex. Bolt Head: 22 mm (for 10~50 lbf·in)	For tightening RF connector of system (4.3-10 Type)
		Apply Hex. Bolt Head: 32 mm (for 100~400 lbf·in)	For tightening RF connector of antenna (DIN Type)
6	Spanner	10 mm	For loosening M6 Hex.Bolt
		17mm	For loosening M10 Hex.Bolt
		22 mm	For loosening RF connector of system (4.3-10 Type)
		32mm	For loosening RF connector of antenna (DIN Type)
7	Ratchet Wrench	10 × 13/17 × 19 (4 in 1)	For fastening Hex. Bolt
8	Tape Measure	16 ft./150 ft.	Tape measure for length measurement
9	Power Extension Cable	100 ft.	Basic tool

Copyright © 2017, All Rights Reserved.

No.	Name	Specification	Purpose of use
10	Level 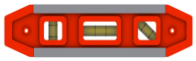	Normal	For horizontality and verticality
11	Hammer Drill	Normal	Wall Type Drilling
12	Concrete Drill Bit	0.55 in. (14 mm)	For M10 Strong Anchor
13	Anchor Punch	M10	For M10 Strong Anchor
14	Hammer	Normal	Anchor fixing
15	Vacuum Cleaner	Normal	For removing dust during the drilling work
16	Heating Gun	122~572°F (50~300°C)	Shrinking Feeder cable tube
17	Cable Cutter	0.24~1.26 in. (6~32 mm)	Cable cutting
18	Crimping Tool	AWG14~AWG4 (1.5~16 mm^2)	Pressure terminal for crimping
19	Wire Stripper	Apply cable thickness: 1.5~6.2 in.(4~16 mm)	Cable sheath for removal
20	Nipper	Basic Tool	For cutting cable & cable tie
21	LAN Tool	Basic Tool	RJ45 Crimper
22	Industrial Scissor	Basic Tool	Cutting
23	Knife	Basic Tool	Cutting

Copyright © 2017, All Rights Reserved.

No.	Name	Specification	Purpose of use
24	Optical Connector Cleaner	For LC Connector	For Optical Connector Cleaning
25	Optic Transceiver Removal Tool	Normal	Separate the Optical Module
26	Multi tester	Digital Pocket Tester	The voltage and current measurements Whether measured cable disconnection
27	Fiber Optical Test Set	Wave length: 1310 nm, 1550 nm (single mode) 850 nm, 1310 nm (multi mode)	Optical level check
28	Angle Meter	Normal	Antenna angle measurement
29	Multi master (VSWR & RF Power)	Normal	Feeder VSWR measurement
30	Compass	Normal	Check azimuth during installation

The required installation tools may vary depending on the conditions at the site. In addition to the basic tools, a protractor, ladder, safety equipment, cleaning tools, and so on should also be prepared in consideration of the site conditions.

Copyright © 2017, All Rights Reserved.

Chapter 2 Installing System

Installation Procedure

The procedure to install the RRH is as follows.

Figure 4. Procedure to Install the RRH

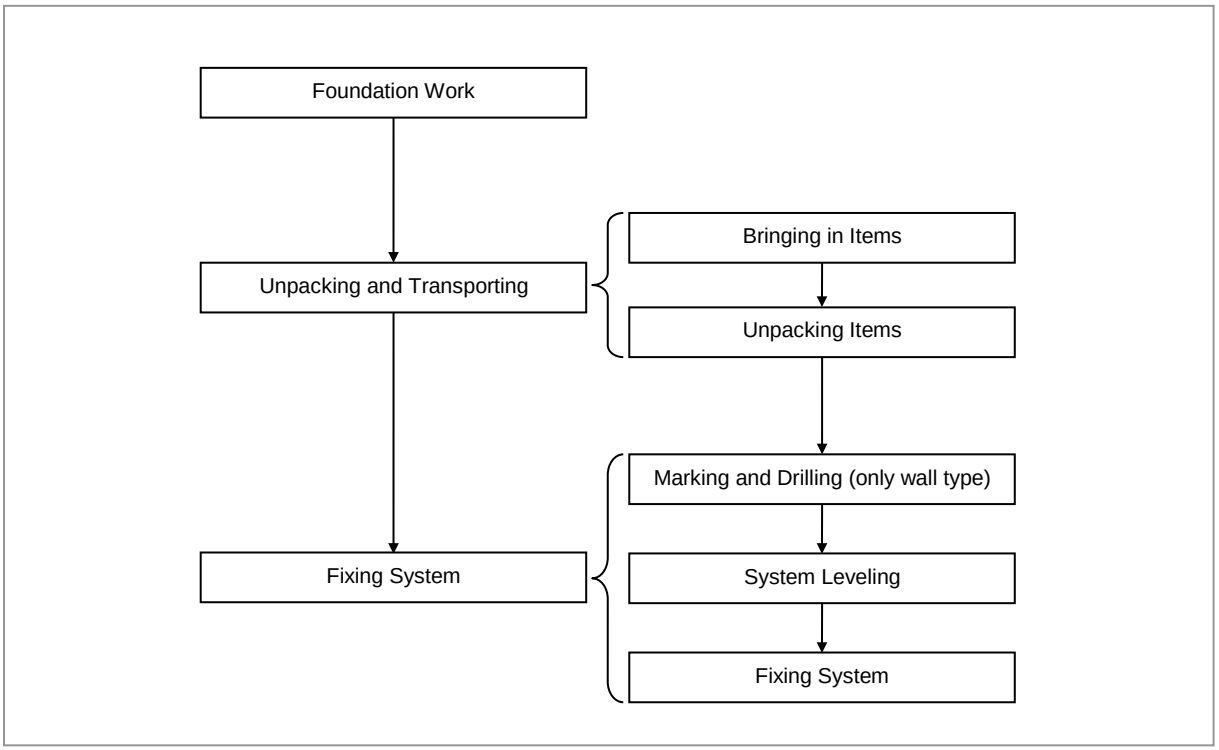

Make sure that the power switch of the power supply is OFF when installing the system. Installing the system with the power switch ON may cause system damage or fatal human injury when connecting or disconnecting the cables.

To prevent the risk of electrical shock do not wear accessories such as watches and rings.

Copyright © 2017, All Rights Reserved.

System Arrangement

A minimum distance must be secured around the RRH, in each direction for installation and maintenance.

Figure 5. RRH Arrangement_1 Sector Pole Type Installation

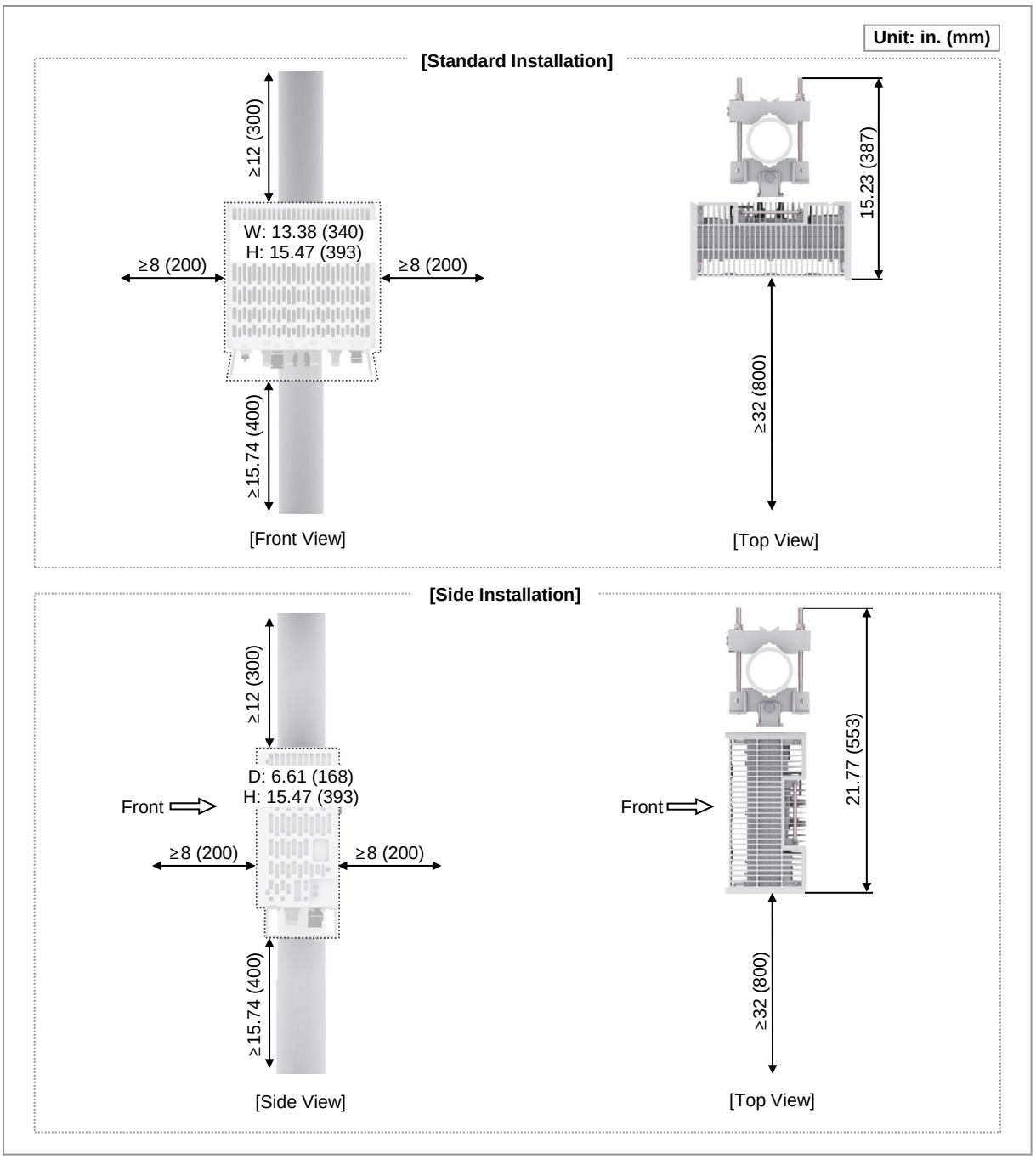

Copyright © 2017, All Rights Reserved.

Figure 6. RRH Arrangement_3 Sector Pole Type Installation

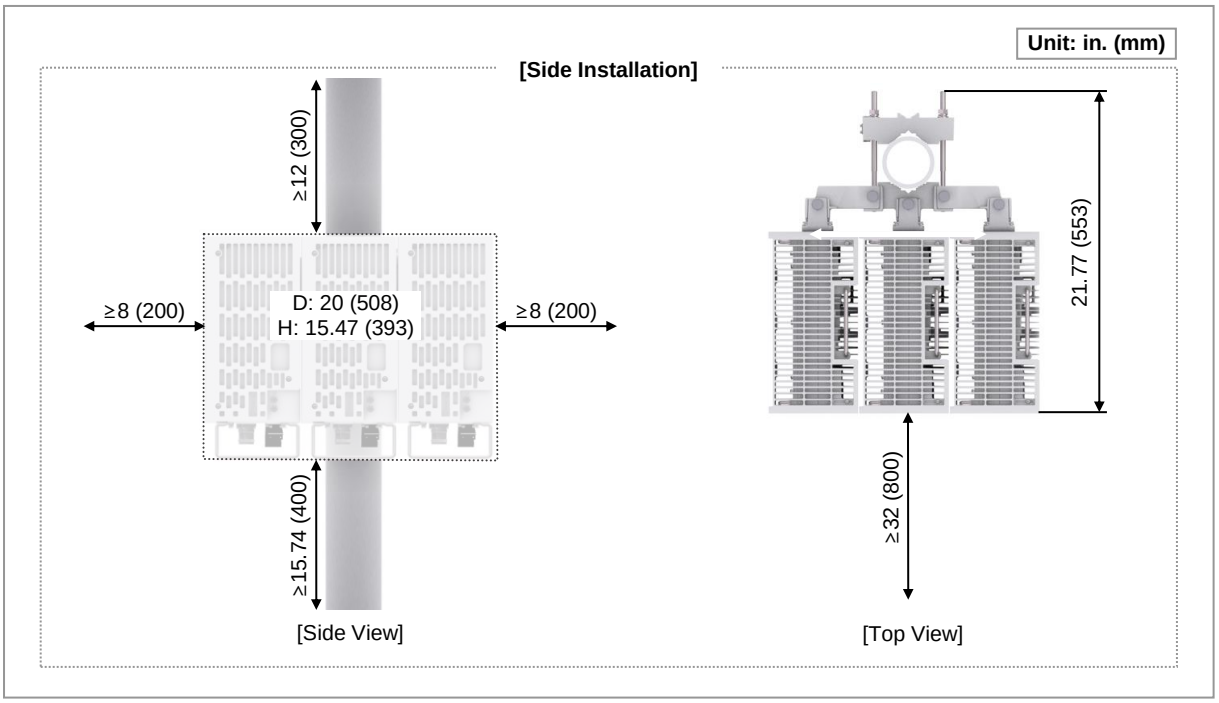

When fixing a pole mounting bracket, the length of a carriage bolt is 220 mm for the pole diameter 50~100 A.

Pole Size (Diameter)	Length of Carriage Bolt
50 A (60.5 mm)	220 mm
65 A (76.3 mm)	
80 A (89.2 mm)	
90 A (101.6 mm)	
100 A (114.3 mm)	

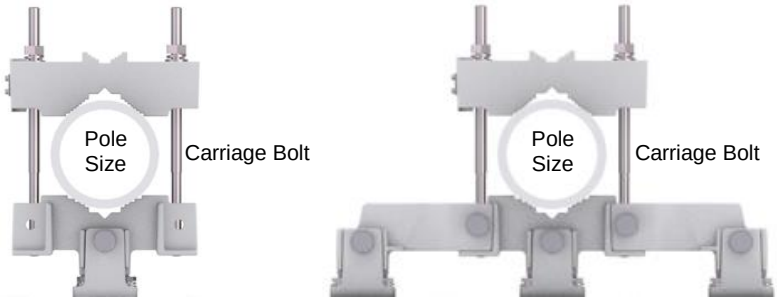

[1 Sector] [3 Sector]

Copyright © 2017, All Rights Reserved.

Figure 7. RRH Arrangement_1 Sector Wall Type Installation

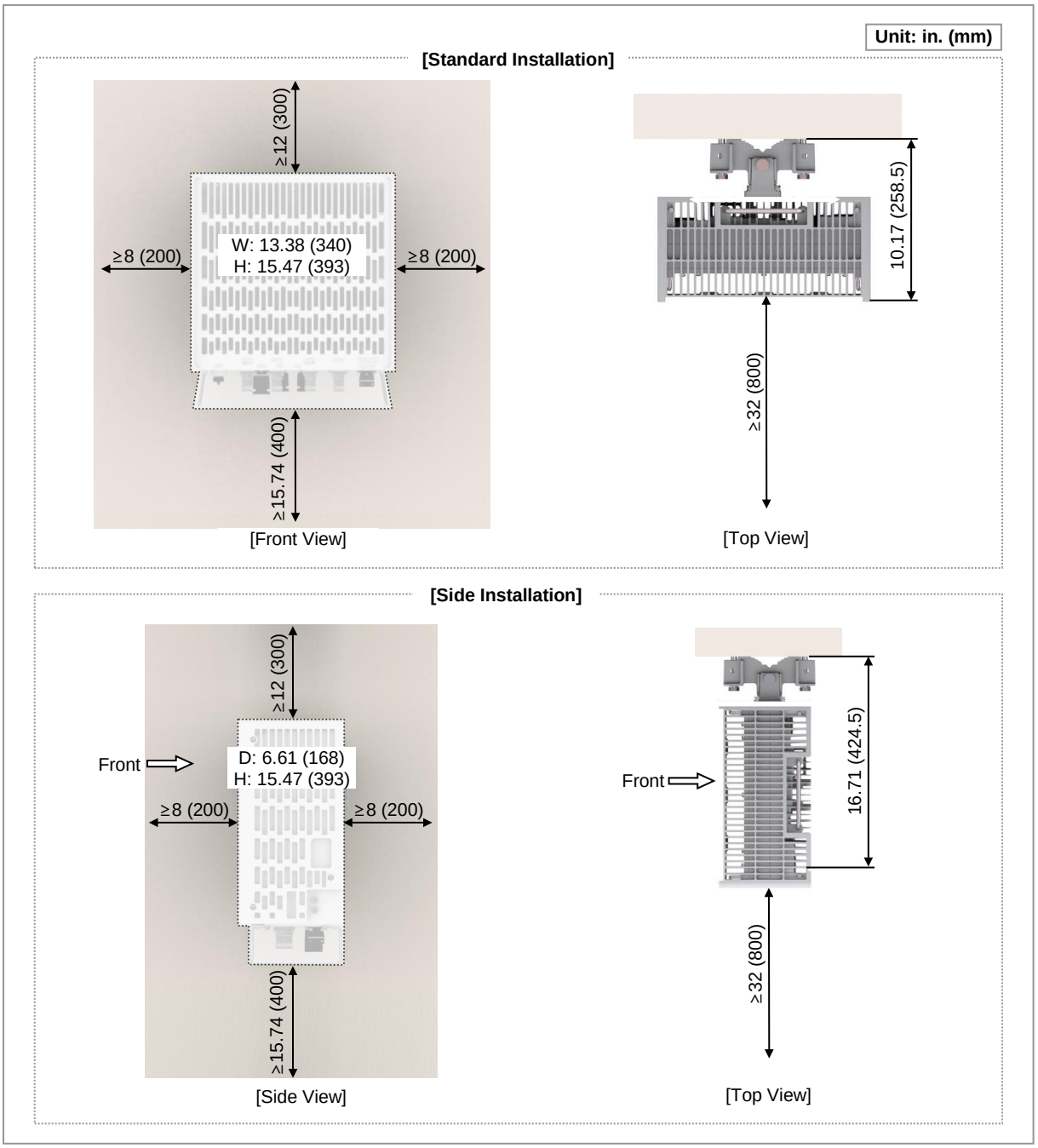

Copyright © 2017, All Rights Reserved.

Figure 8. RRH Arrangement_3 Sector Wall Type Installation

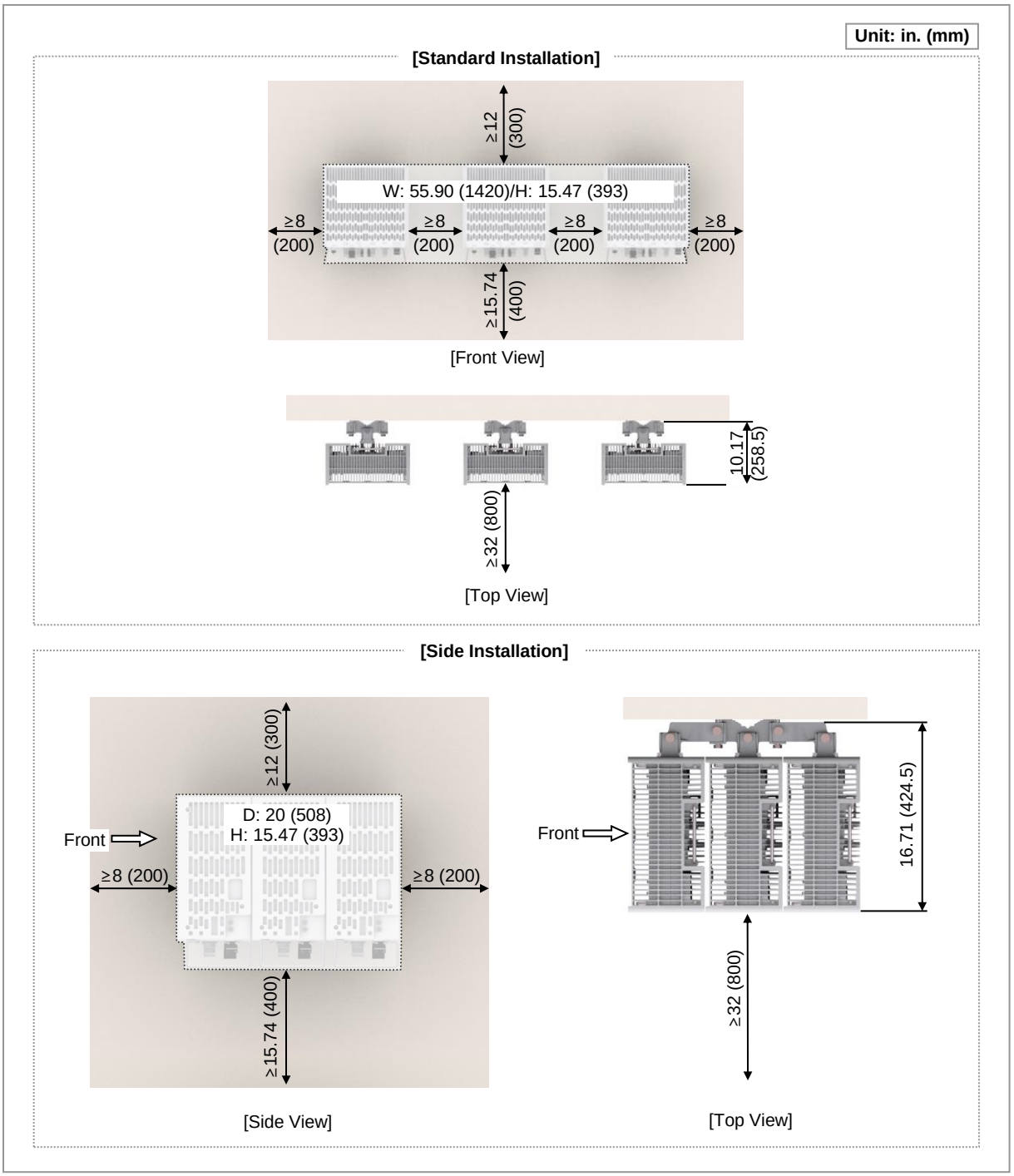

Copyright © 2017, All Rights Reserved.

Unpacking and Transporting

This paragraph describes the work to unpack cabinets and other components and transport them to the place to be installed.

Bringing in Items

Bring in items, taking care of the followings:

- When carrying a system, fasten the system firmly to the transport vehicle or carrier to prevent a damage to the system for a vibration or shock.
- When carrying system, use a lift to prevent accidents. However, if the system must be carried by people, enough people are required to carry the system.
- Before moving the system, check the storage place for the system and remove obstacles in advance.
- While moving system, the system should not be shocked physically and damaged caused by dust, moisture, and static electricity.

Unpacking Items

The procedure to unpack items is as follows:

- The packing items must be packed until they reach the installation place.
- The items are classified in accordance with each job specification and stored on a place that does not interfere with working.
- Unpacked systems must be installed immediately. If not installed immediately, the systems must be stored in the installation place temporarily.
- Unpack only external packing, leaving the internal packing in unpacked status.
- Unpack the inner packaging after each system is placed on its installation location.
- Scrap by-products (packaging waste) in accordance with the rule. Do not recycle the by-products.

Copyright © 2017, All Rights Reserved.

RRH Handling

When transporting an RRH, hold a handle at the top of the RRH. (No tool is needed for using the handle.)

Figure 9. Using a Handle to transport an RRH

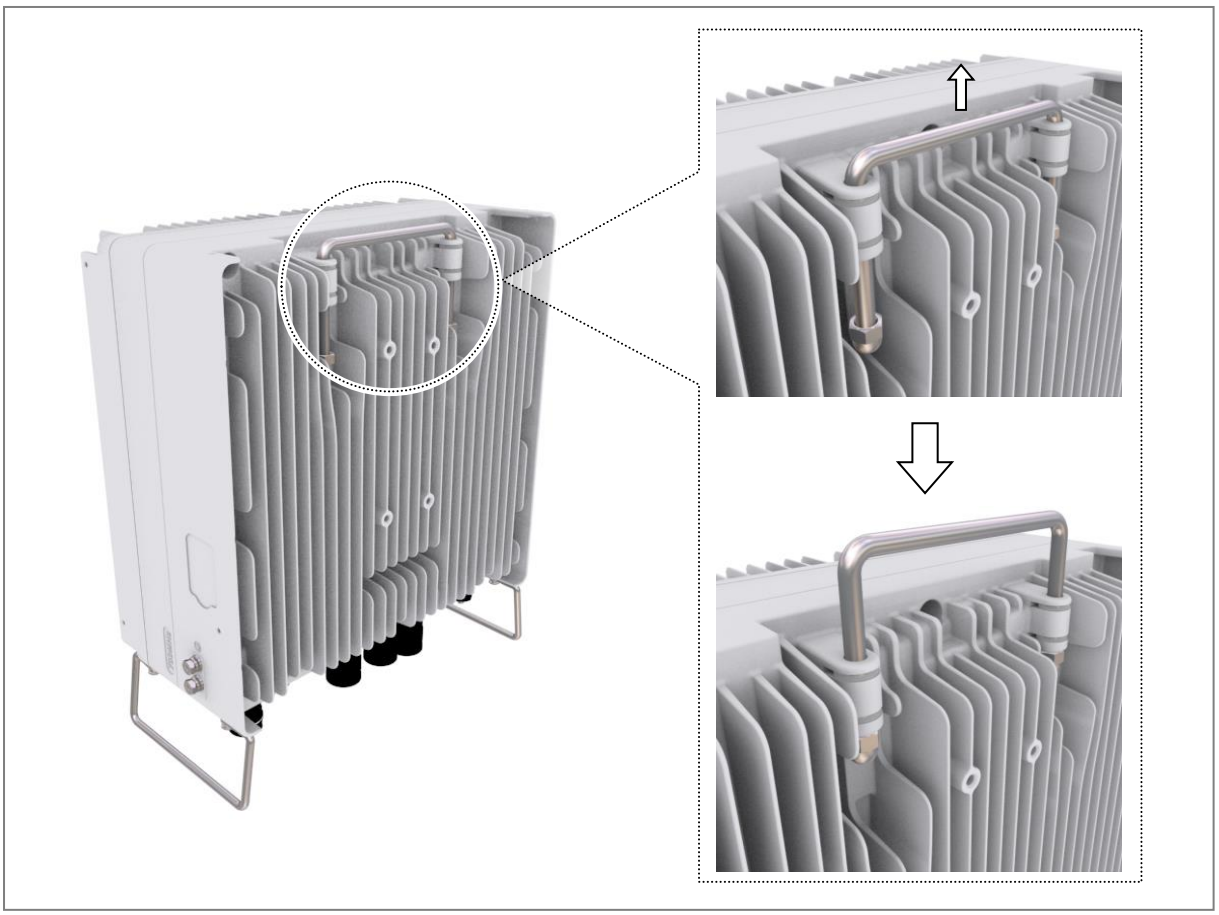

Copyright © 2017, All Rights Reserved.

Fixing RRH

Fixing Finger Guard

To fix Finger Guard

1 Make sure you have the following items:

Table 3. Parts and Tools for fixing Finger Guard

Category	Description		
Parts	Finger Guard		1 EA
	Fastener	M4 × 10L SEMS	8 EA
Recommended Torque Value	M4 SEMS		13 lbf·in (15 kgf·cm)
Working Tools	Torque Driver (6~22 lbf·in), Screw Driver Bit ('+', No. 2), Screw Driver ('+', No. 2)		

2 Place a unit bracket to the RRH's front.

Figure 10. Finger Guard Fixing (1)

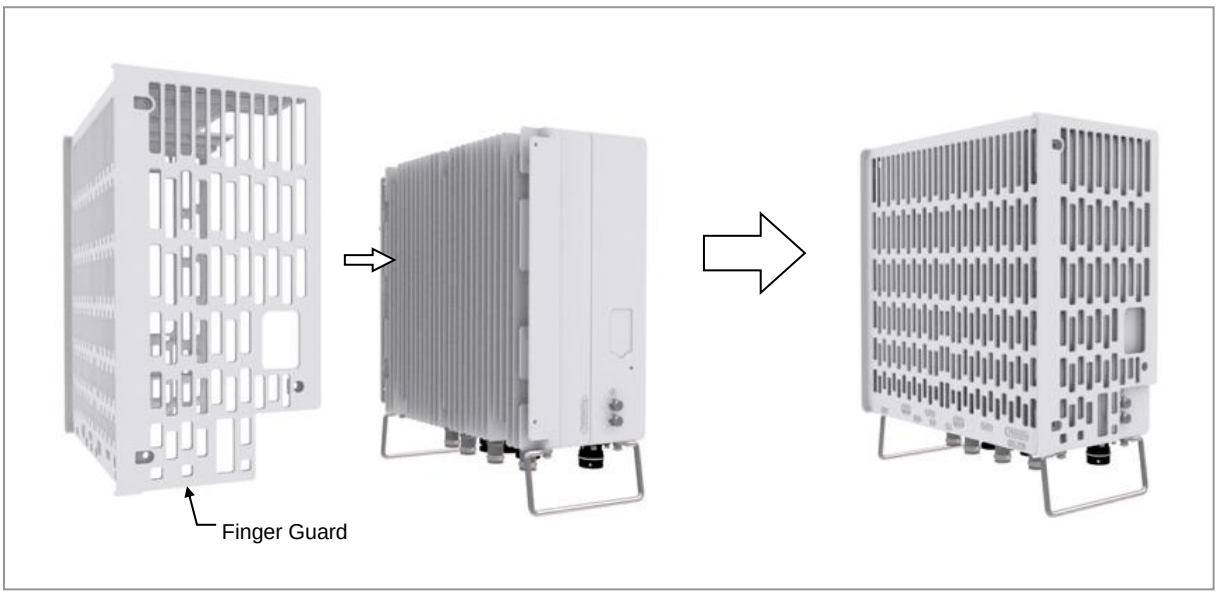

3 Fix RRH and finger guard using fasteners.

Copyright © 2017, All Rights Reserved.

Figure 11. Finger Guard Fixing (2)

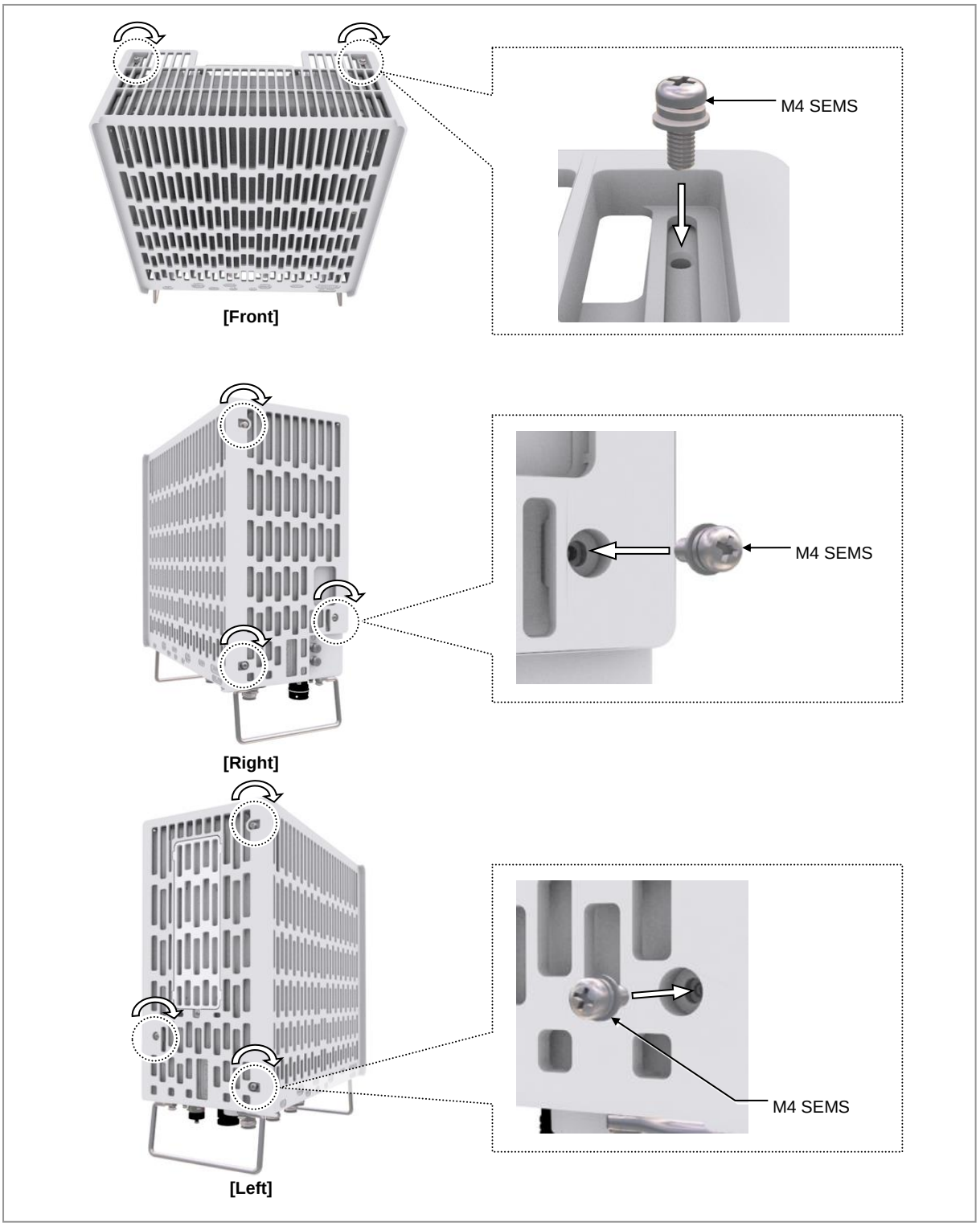

Copyright © 2017, All Rights Reserved.

Fixing Unit Bracket

There are two ways to fix a unit bracket to the RRH.
One is fixing a unit mounting bracket to the rear side of RRH (Standard installation). The other is fixing a unit bracket to the side of RRH (Side installation).
These are the same for the wall type and pole type installation procedures.

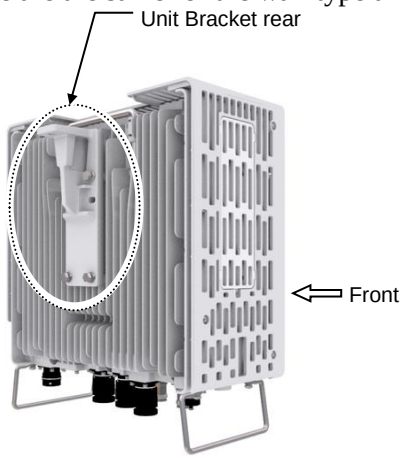

[Unit Bracket Standard Installation]

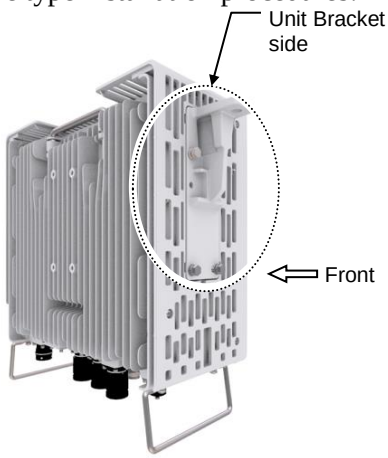

[Unit Bracket Side Installation]

To fix Unit Bracket (Standard Installation)

1 Make sure that you have the following items:

Table 4. Parts and Tools for fixing Unit Bracket (Standard Installation)

Category	Description		
Parts	Unit bracket		1 EA
	Fasteners	M6 × 20L Hex. Bolt (washer assembly)	4 EA/RRH
Recommended Torque Value	M6 × 20L Hex. Bolt		43 lbf·in (50 kgf·cm)
Working Tools	Torque Wrench (10~50 lbf·in), Torque Wrench Spanner head (apply Hex. Head: 10 mm), Spanner (10 mm)		

2 Place a unit bracket to the RRH rear and fix it using fasteners.

Copyright © 2017, All Rights Reserved.

Figure 12. Fixing Unit Bracket_Standard Installation

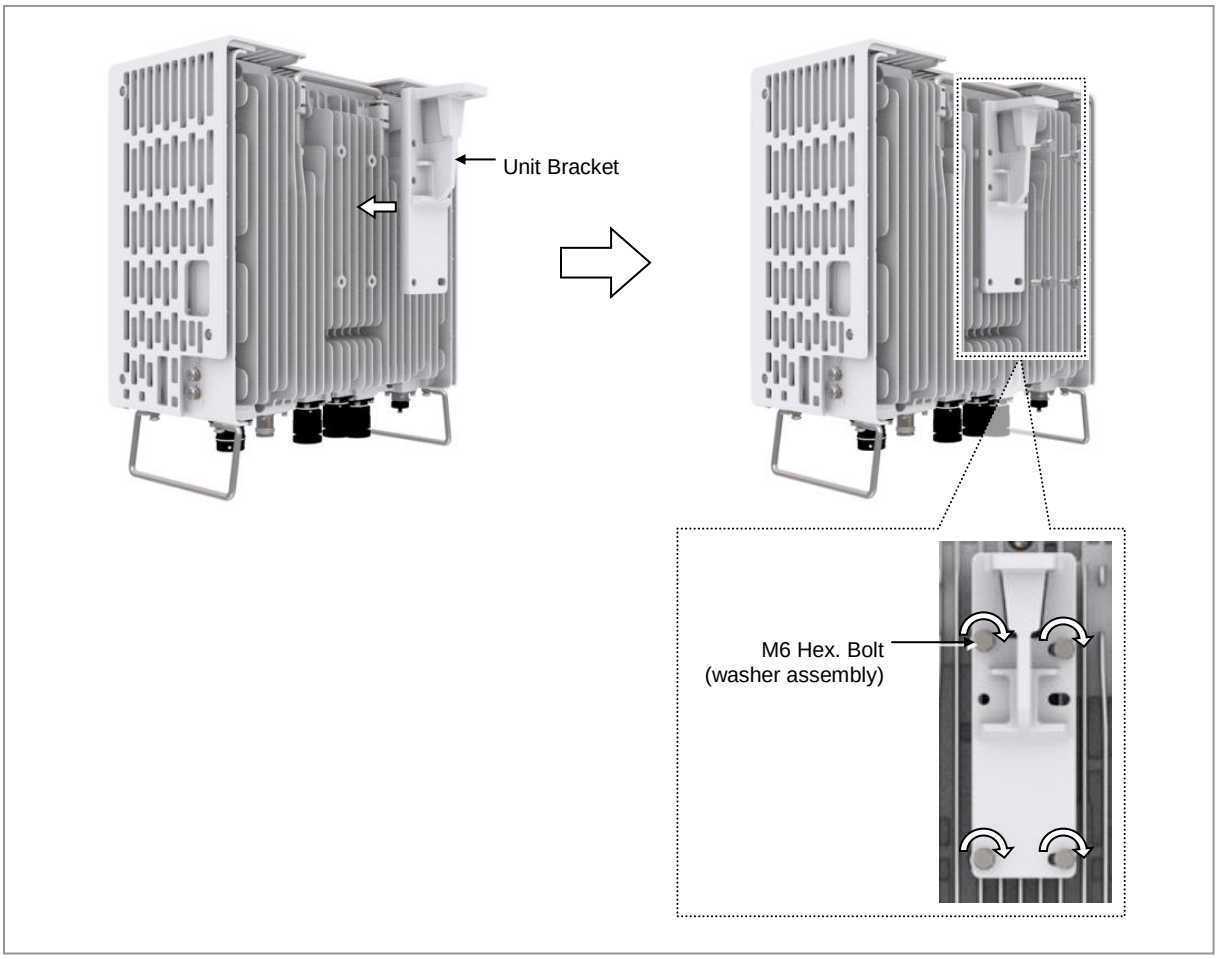

To fix Unit Bracket (Side Installation)

1 Make sure that you have the following items:

Table 5. Parts and Tools for fixing Unit Bracket (Side Installation)

Category	Description		
Parts	Unit bracket		1 EA
	Fasteners	M6 × 20L Hex. Bolt (washer assembly)	4 EA/RRH
Recommended Torque Value	M6 × 20L Hex. Bolt		43 lbf·in (50 kgf·cm)
Working Tools	Screw Driver ('+', No. 2), Torque Wrench (10~50 lbf·in), Torque Wrench Spanner head (apply Hex. Head: 10 mm), Spanner (10 mm)		

2 Loosen a fastener of the finger guard left side and separate the dummy cover from the system.

Copyright © 2017, All Rights Reserved.

Figure 13. Fixing Unit Bracket_Side Installation (1)

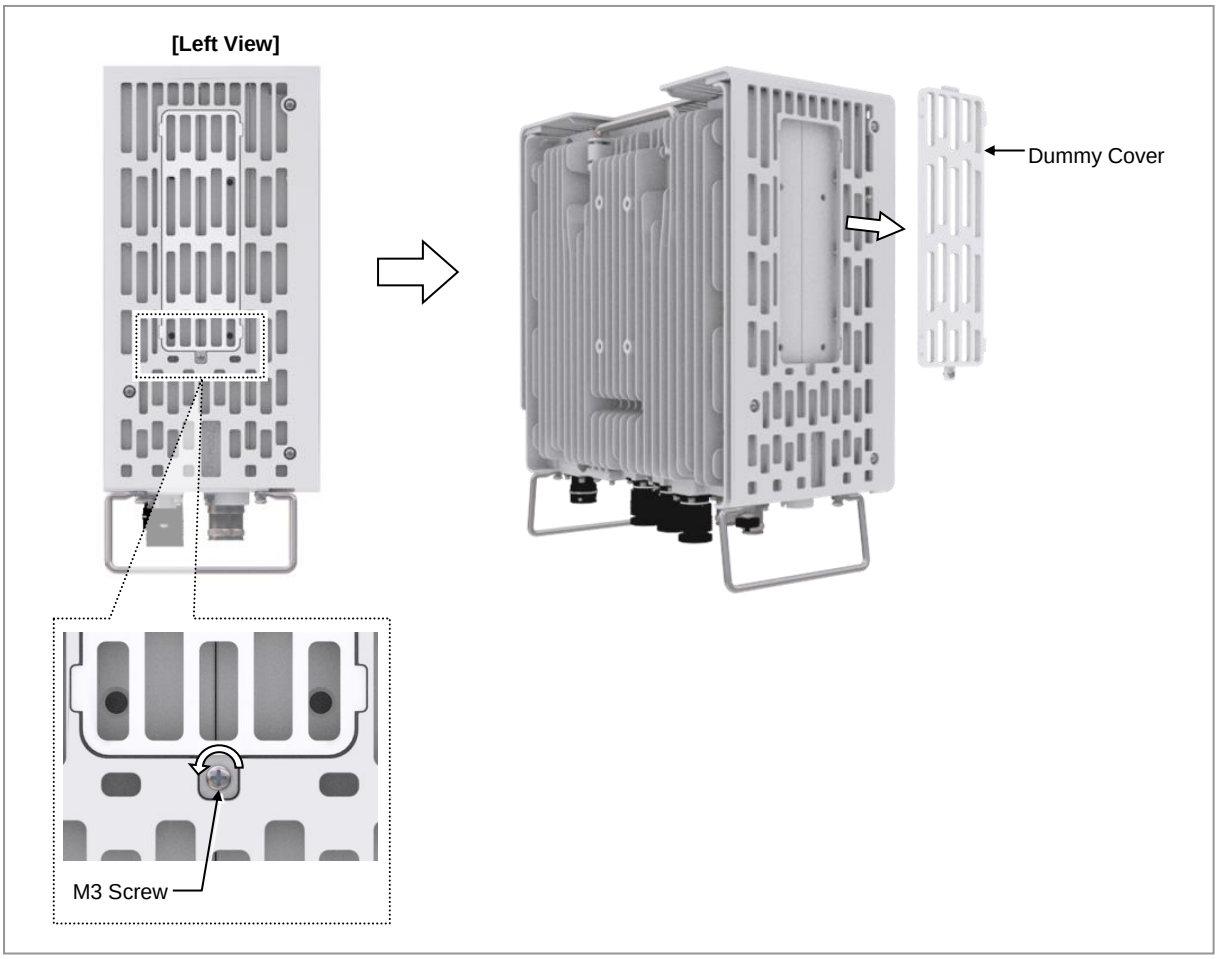

3 Place a unit bracket to the RRH side and fix it using fasteners.

Copyright © 2017, All Rights Reserved.

Figure 14. Fixing Unit Bracket_Side Installation (2)

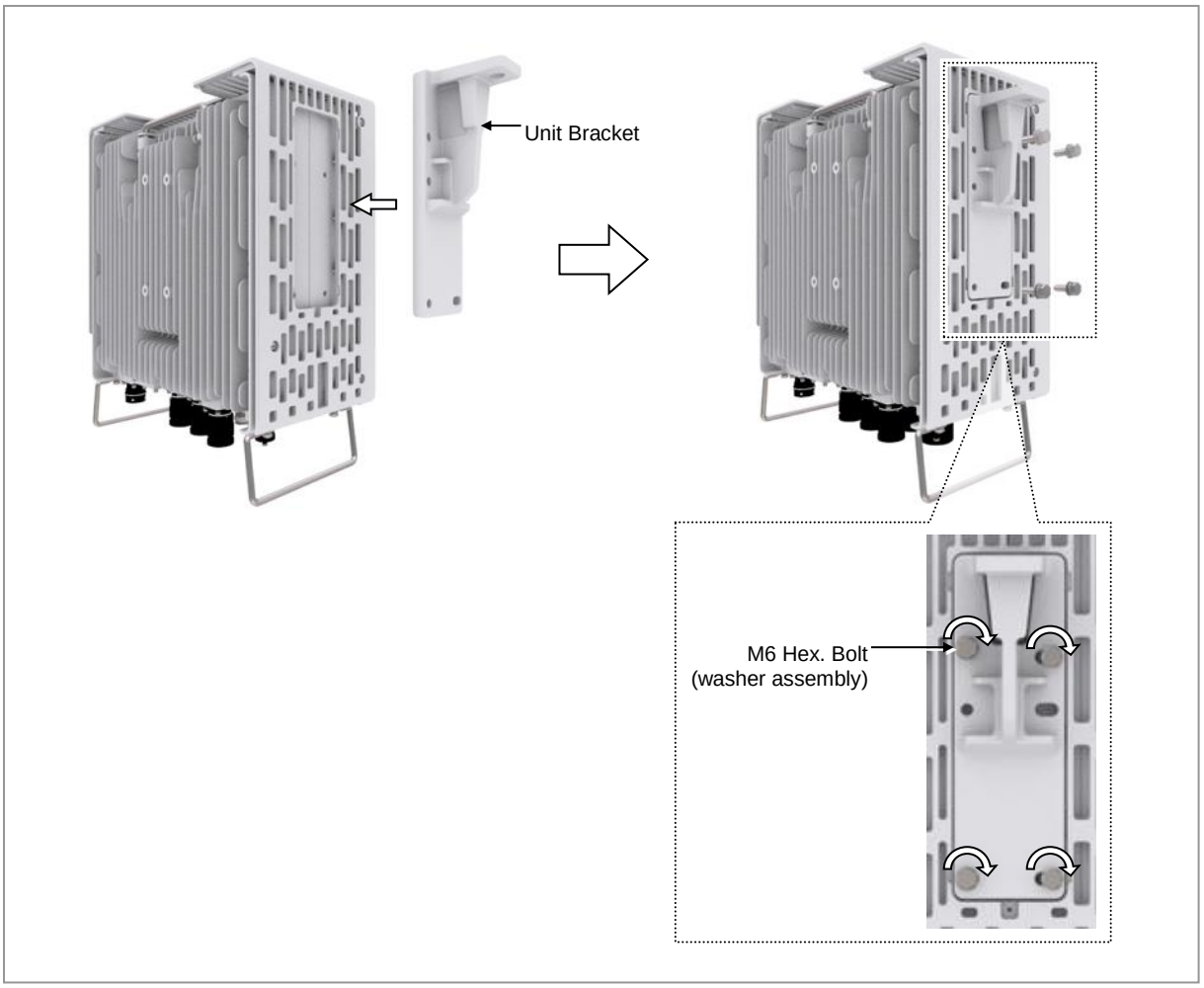

Assembling 3 Sector Mounting Bracket Assembly_Front

Assemble the 3 Sector mounting bracket assembly_front before installing 3 Sector system. The method for assembling the pole type is identical to it of wall type.

[3 Sector Mounting Bracket Assembly_Front]

To assemble 3 Sector Mounting Bracket Assembly_Front

1 Make sure that you have the following items:

Copyright © 2017, All Rights Reserved.

Table 6. Parts and Tools for assembling 3 Sector Mounting Bracket Assembly_Front

Category	Description		
Parts	Mounting Bracket_Front		1 EA
	Extension Mounting Bracket		2 EA
	Fastener	M10 × 25L Hex. Bolt (washer assembly)	2 EA
Recommended Torque Value	M10 Hex. Bolt		217 lbf·in (250 kgf·cm)
Working Tools	Torque Wrench (100~400 lbf·in), Torque Wrench Spanner head (apply Hex. Head: 17 mm), Spanner (17 mm)		

2 Hang the right hook of mounting bracket_front on the Extension mounting bracket hook groove.

Figure 15. Assembling 3 Sector Mounting Bracket Assembly_Front (1)

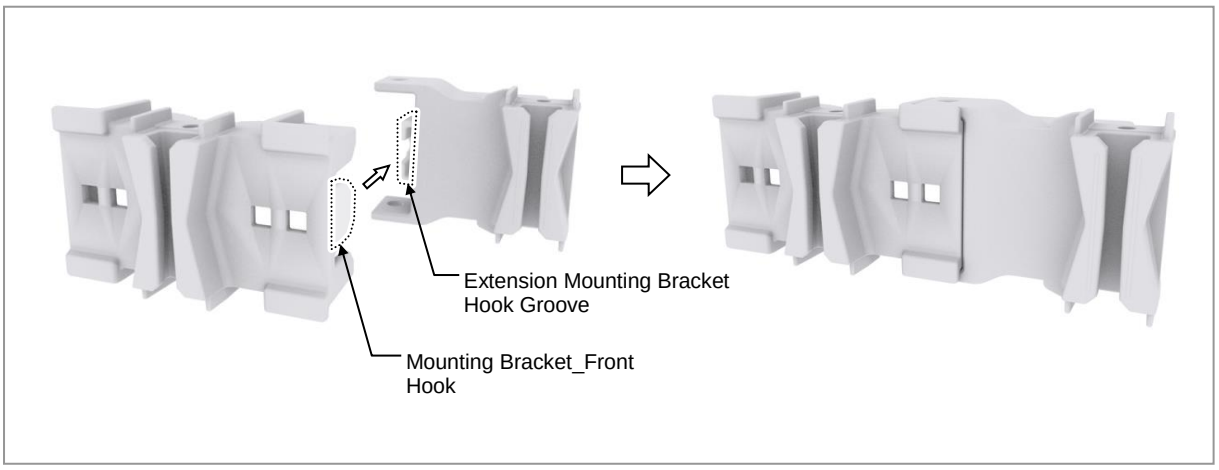

3 Hang the left hook of mounting bracket_front on the Extension mounting bracket hook's groove.

Figure 16. Assembling 3 Sector Mounting Bracket Assembly_Front (2)

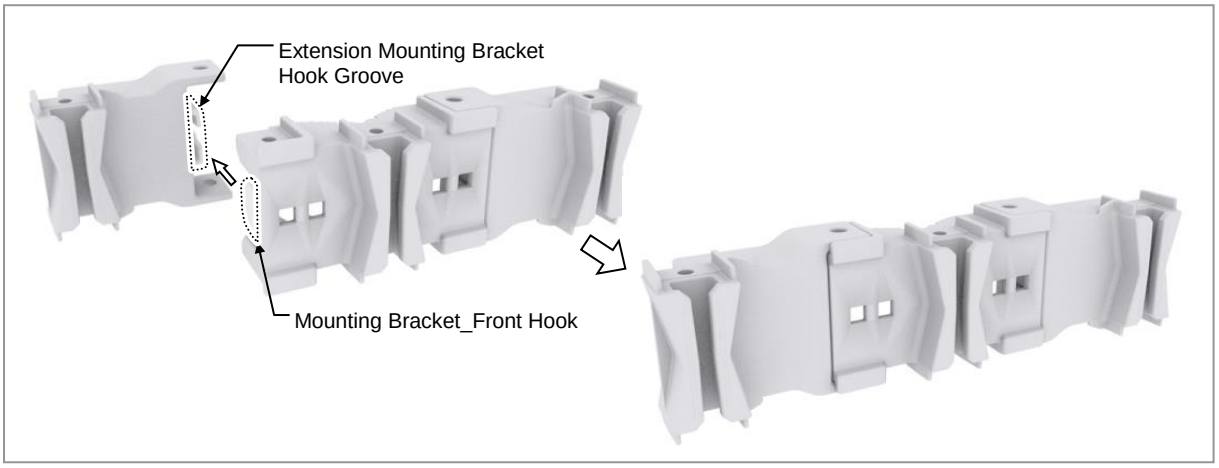

4 Fix mounting bracket_front and extension mounting bracket using fasteners.

Copyright © 2017, All Rights Reserved.

Figure 17. Assembling 3 Sector Mounting Bracket Assembly_Front (3)

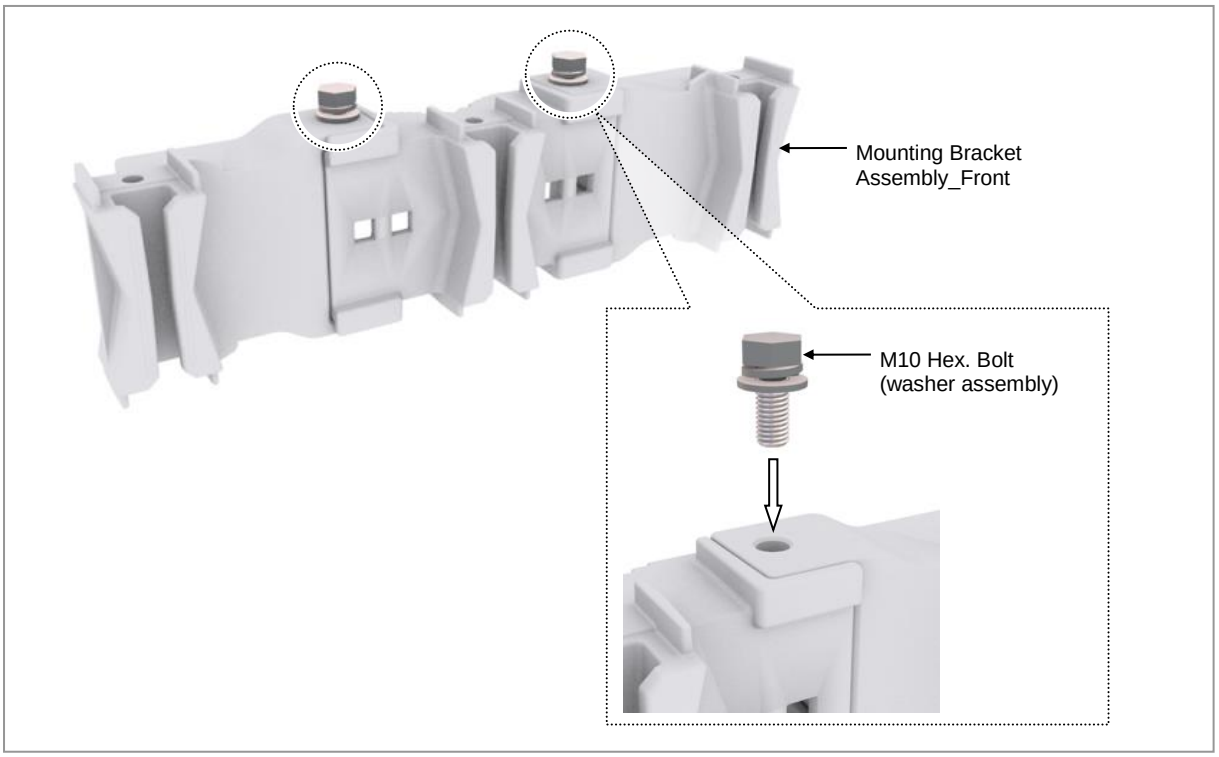

Fixing Pole Type

Assembling Mounting Bracket

For 1 Sector

The way to assemble 3 sector mounting bracket is as follows:

To assemble Mounting Bracket_1 Sector Pole Type

1 Make sure you have the following items:

Table 7. Parts and Tools for assembling Mounting Bracket_1 Sector Pole Type

Category	Description		
Parts	Mounting Bracket_Front		1 EA
	Mounting Bracket_Rear		1 EA
	Fasteners	M10 × 220L Carriage Bolt M10 Plain Washer M10 Spring Washer M10 Hex. Nut	2 EA 2 EA 2 EA 2 EA
Working Tools	Spanner (17 mm)		

When fixing the mounting bracket, the specification of pole is from 50 A (2.38

Copyright © 2017, All Rights Reserved.

in./60.5 mm) to 100 A (4.5 in./114.3 mm) and the specification of carriage bolt is M10 × 220L.

When fixing pole, fix it using the outside hole of mounting bracket_front.

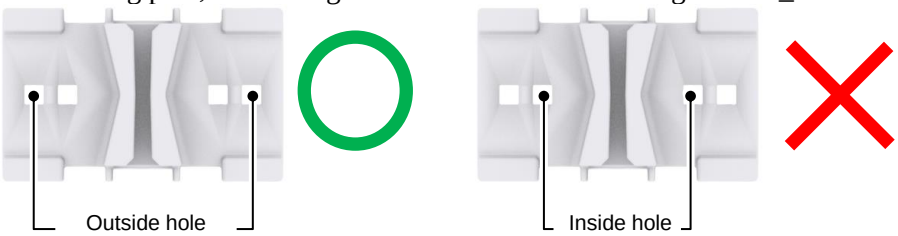

2 Insert carriage bolts to the outside hole of Mounting bracket_front.

Figure 18. Assembling Mounting Bracket_1 Sector Pole Type (1)

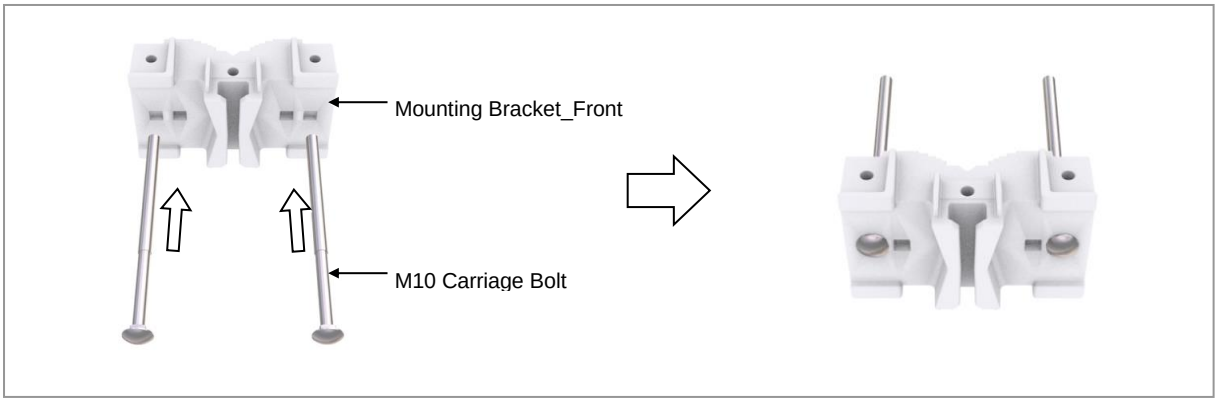

3 Pass the carriage bolt through the side closed hole of the mounting bracket_rear, fix the fastening material, and fasten the other carriage bolt to the mounting bracket_front only.

Copyright © 2017, All Rights Reserved.

Figure 19. Assembling Mounting Bracket_1 Sector Pole Type (2)

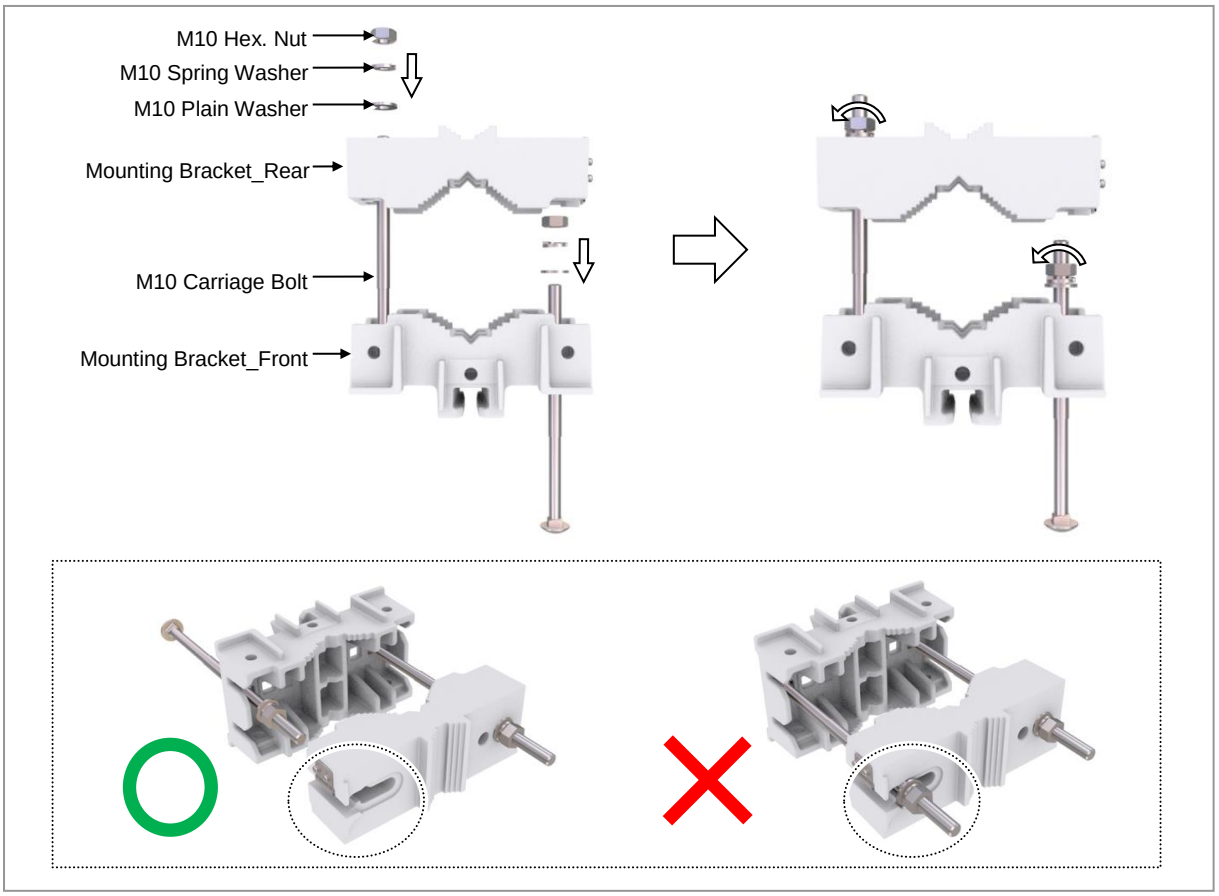

For 3 Sector

The way to assemble 3 sector mounting bracket is as follows:

▶ To assemble Mounting Bracket_3 Sector Pole Type

1 Make sure you have the following items:

Table 8. Parts and Tools for assembling Mounting Bracket_3 Sector Pole Type

Category	Description		
Parts	3 Sector Mounting Bracket Assembly_Front		1 Set
	Mounting Bracket_Rear		1 EA
	Fasteners	M10 × 220L Carriage Bolt M10 Plain Washer M10 Spring Washer M10 Hex. Nut	2 EA 2 EA 2 EA 2 EA
Working Tools	Spanner (Hexagon: 17 mm)		

When fixing the mounting bracket, the specification of pole is from 50 A (2.38 in./60.5 mm) to 100 A (4.5 in./114.3 mm) and the specification of carriage bolt is

Copyright © 2017, All Rights Reserved.

M10 × 220L.

When fixing pole, fix it using the outside hole of mounting bracket assembly_front.

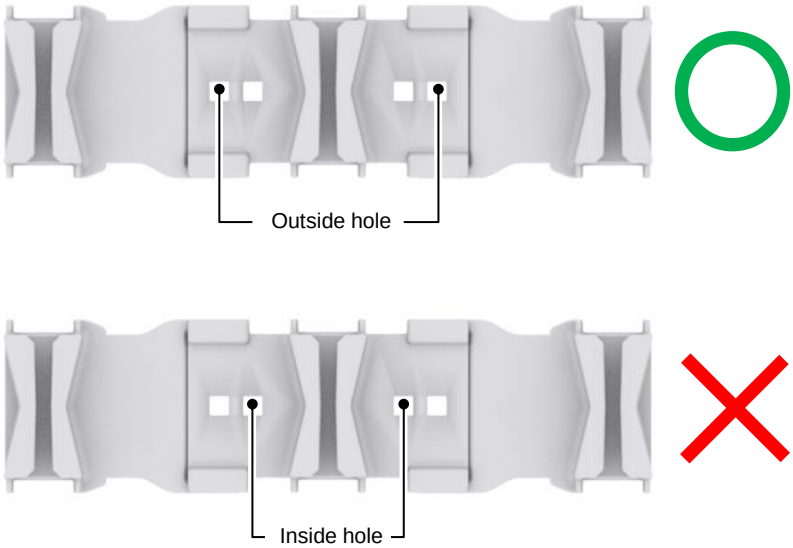

2 Insert carriage bolts to the outside hole of Mounting bracket assembly_front.

Figure 20. Assembling Mounting Bracket_3 Sector Pole Type (1)

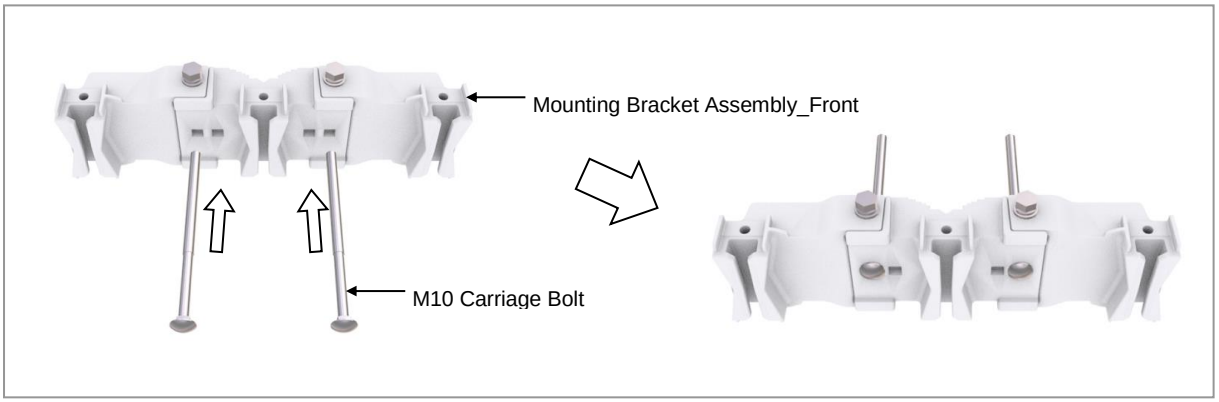

3 Pass the carriage bolt through the side closed hole of the mounting bracket_rear, fix the fastening material, and fasten the other carriage bolt to the mounting bracket Assembly_front only.

Copyright © 2017, All Rights Reserved.

Figure 21. Assembling Mounting Bracket_3 Sector Pole Type (2)

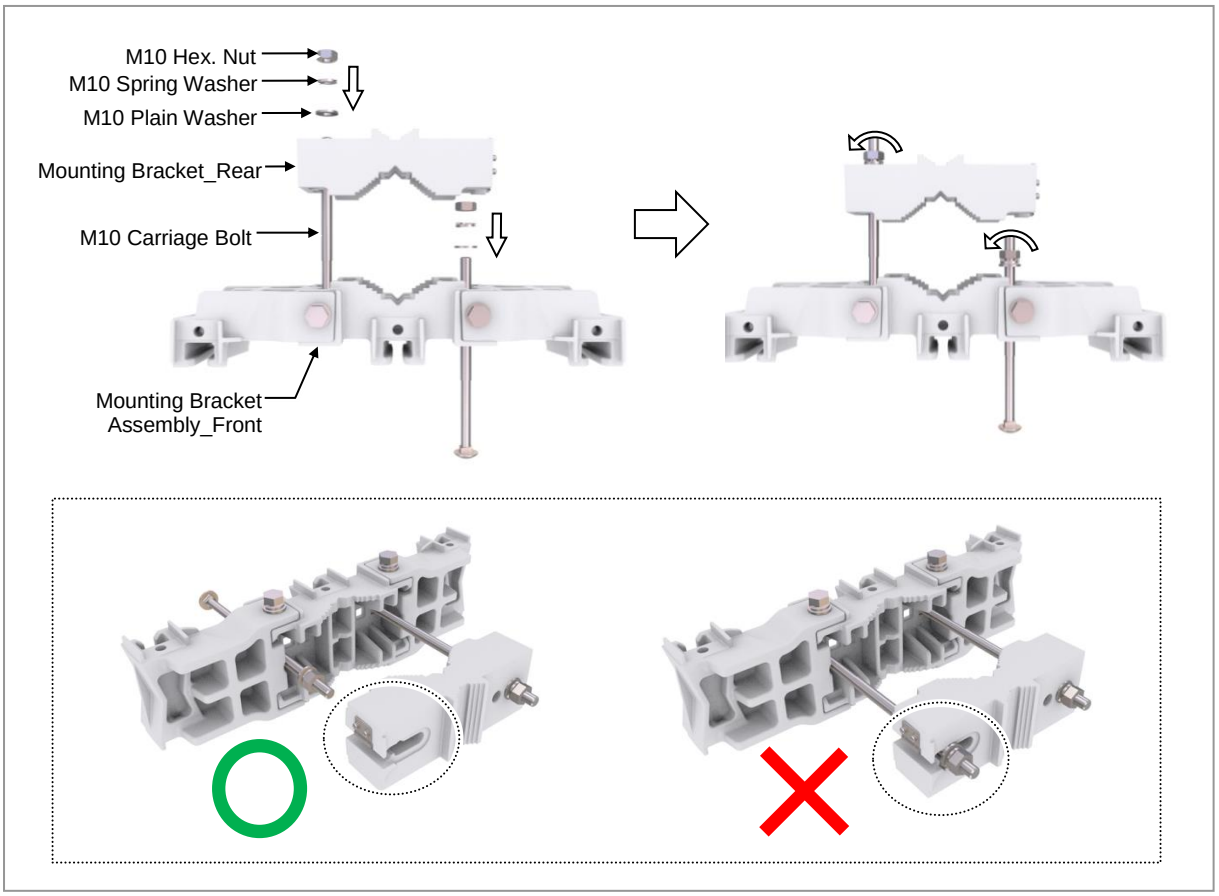

Lifting RRH & Mounting Bracket Assembly

To lift RRH/Mounting Bracket Assembly

1 Tie the rope in two carrying points of RRH and Mounting bracket assembly. The method for lifting 1 Sector is identical to it of 3 sector.

Copyright © 2017, All Rights Reserved.

Figure 22. Lifting RRH & Mounting Bracket Assembly_Pole Type

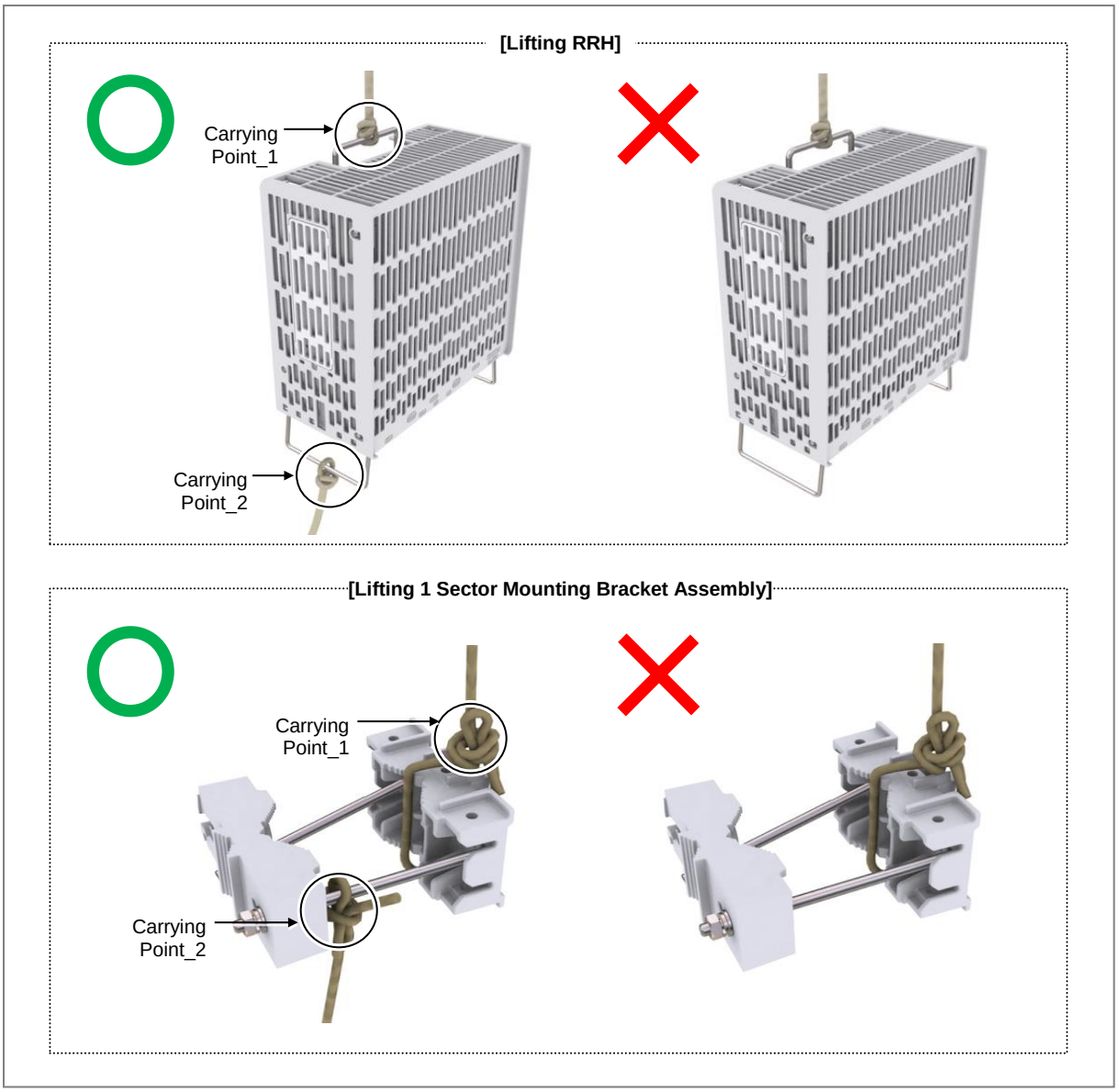

2 While Operator A hauls the rope to carry up the RRH/mounting bracket assembly, Operator B pulls the rope outward so that RRH/ mounting bracket assembly would not hit the tower platform.

Copyright © 2017, All Rights Reserved.

Figure 23. Lifting RRH & Mounting Bracket Assembly_Pole Type

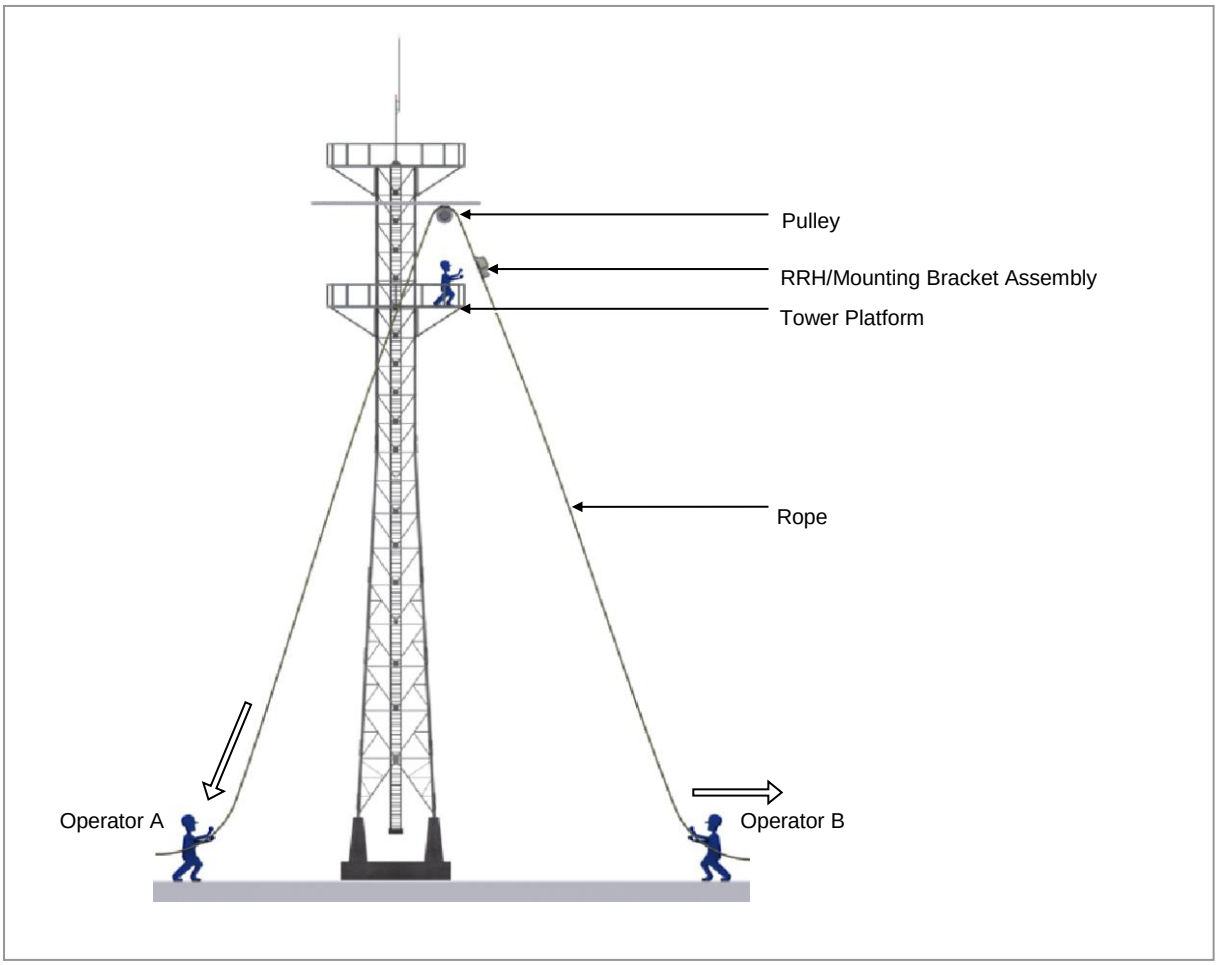

Fixing Mounting Bracket Assembly

Check the Mounting Bracket_front type per installation type and sector type before installing the Mounting bracket.

Table 9. Mounting Bracket type per installation type and sector type_Pole Type

Sector Type	Installation Type	Bracket Type	Unit
1 Sector	Standard Installation	Mounting Bracket_Front	1 EA
3 Sector		Not Used	-
1 Sector	Side Installation	Mounting Bracket_Front	1 EA
3 Sector		3 Sector Mounting Bracket Assembly_Front	1 EA

Copyright © 2017, All Rights Reserved.

Sector Type	Installation Type	Bracket Type	Unit
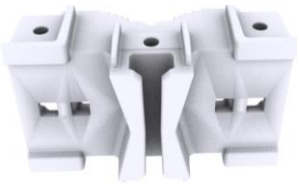 [Mounting Bracket_Front]		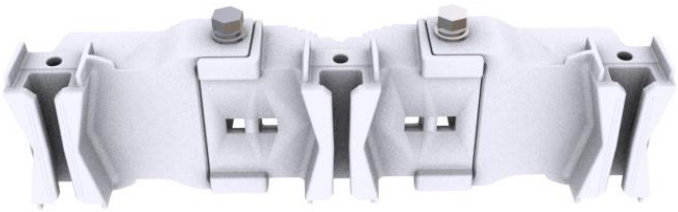 [3 Sector Mounting Bracket Assembly_Front]	

For 1 Sector

The way to fix 1 Sector mounting bracket assembly is as follows:

▶ To fix Mounting Bracket Assembly_1 Sector Pole Type

1 Make sure you have the following items:

Table 10. Parts and Tools for fixing Mounting Bracket Assembly_1 Sector Pole Type

Category	Description	
Parts	1 Sector Mounting Bracket Assembly	1 Set
Recommended Torque Value	M10 Hex. Nut	217 lbf·in (250 kgf·cm)
Working Tools	Torque Wrench (100~400 lbf·in), Torque Wrench Spanner head (apply Hex. Head: 17 mm), Spanner (17 mm), Level	

2 Place a Mounting Bracket Assembly to the pole.

Figure 24. Fixing Mounting Bracket Assembly_1 Sector Pole Type (1)

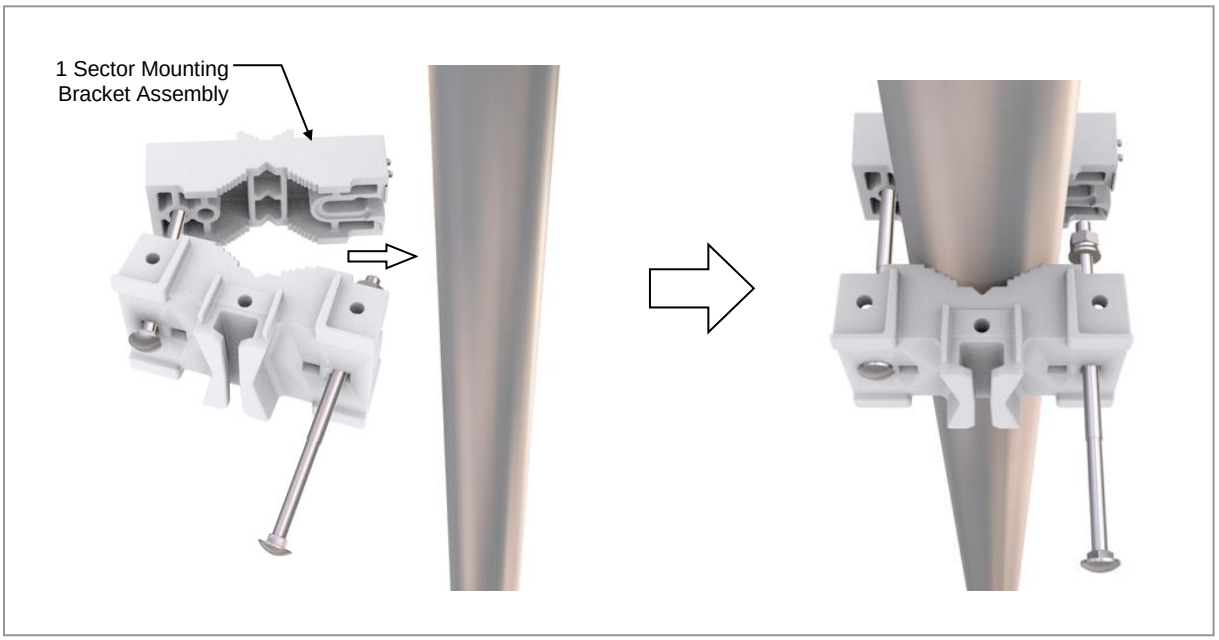

3 Locate the carriage bolt in the side open hole of the mounting bracket_rear and fix the fastening materials on both sides.

Copyright © 2017, All Rights Reserved.

Figure 25. Fixing Mounting Bracket Assembly_1 Sector Pole Type (2)

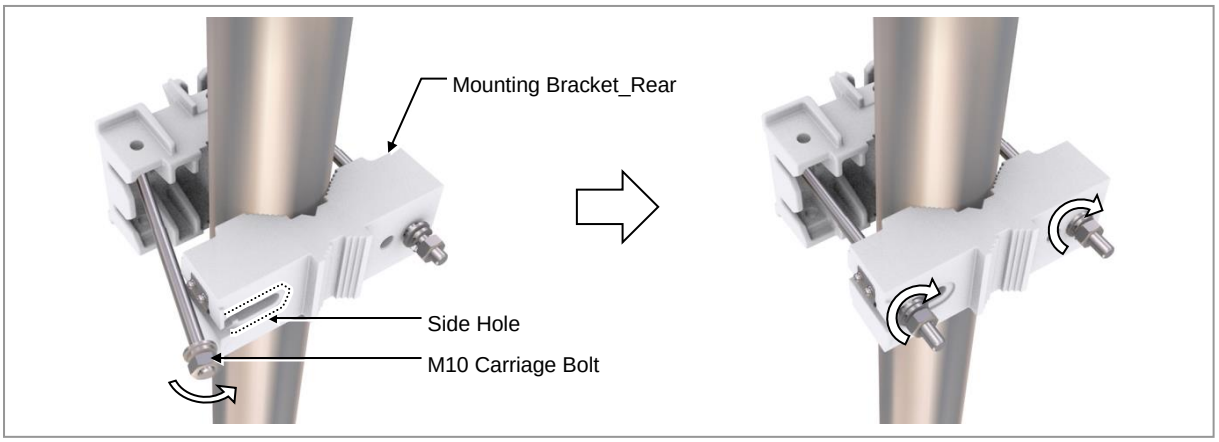

4 Check the level of mounting bracket assembly on a pole and adjust the level.

Figure 26. Leveling Mounting Bracket Assembly_1 Sector Pole Type

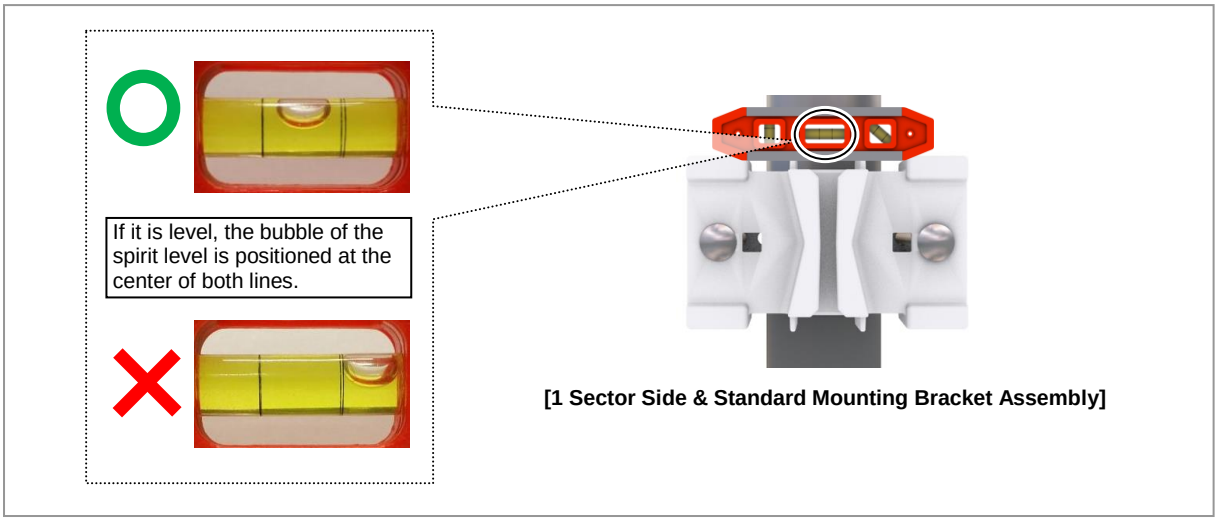

When fixing the pole mounting bracket assembly on a pole, be sure to check the level of bracket. After finishing the installation, you can adjust the level minutely.

When occurring poor leveling, adjust the position of fasteners used to fix the Mounting bracket assembly or its leveling status.

For 3 Sector

The way to fix 3 sector mounting bracket assembly is as follows:

To fix Mounting Bracket Assembly_3 Sector Pole Type

1 Make sure you have the following items:

Copyright © 2017, All Rights Reserved.

Table 11. Parts and Tools for fixing Mounting Bracket Assembly_3 Sector Pole Type

Category	Description	
Parts	3 Sector Mounting Bracket Assembly	1 Set
Recommended Torque Value	M10 Hex. Nut	217 lbf·in (250 kgf·cm)
Working Tools	Torque Wrench (100~400 lbf·in), Torque Wrench Spanner head (apply Hex. Head: 17 mm), Spanner (17 mm), Level	

2 Place a Mounting Bracket Assembly to the pole.

Figure 27. Fixing Mounting Bracket Assembly_3 Sector Pole Type (1)

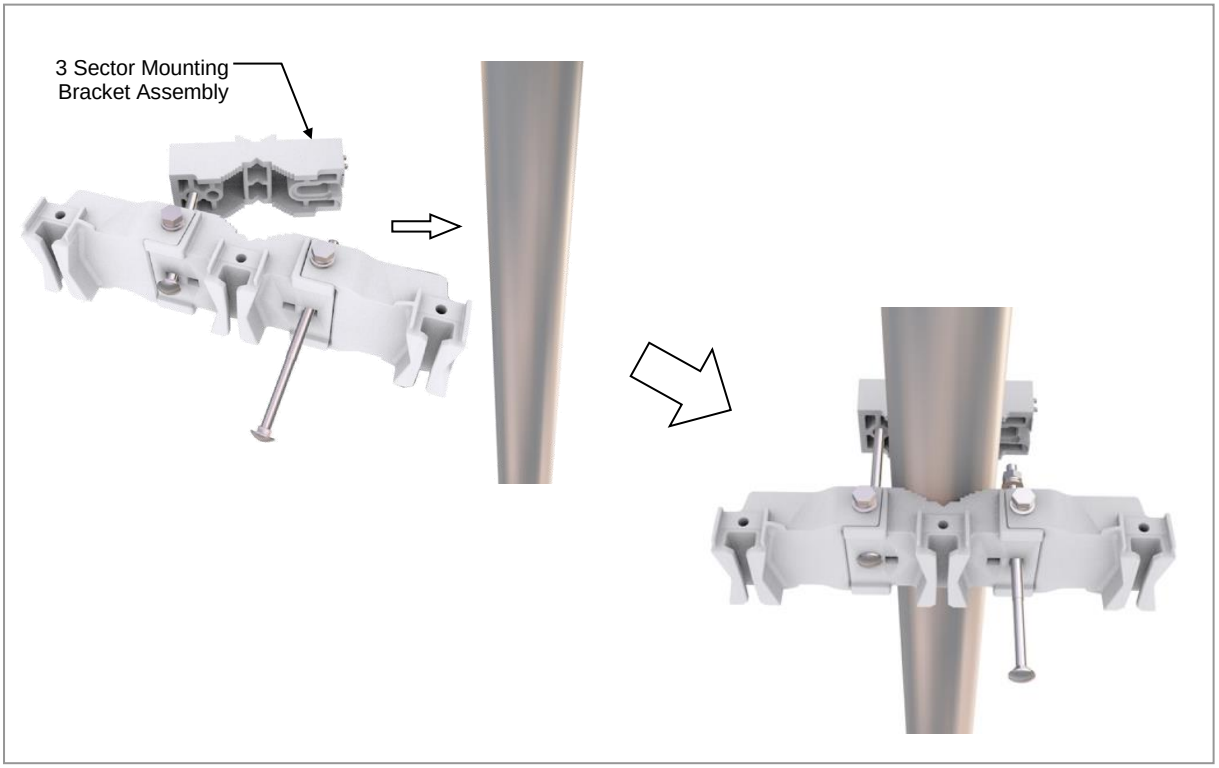

3 Locate the carriage bolt in the side open hole of the mounting bracket_rear and fix the fastening materials on both sides.

Copyright © 2017, All Rights Reserved.

Figure 28. Fixing Mounting Bracket Assembly_3 Sector Pole Type (2)

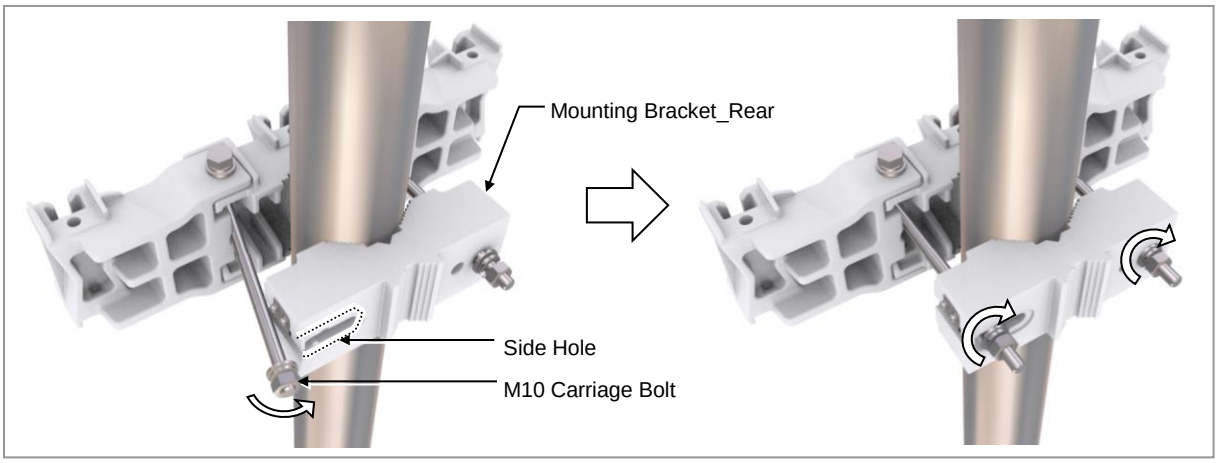

4 Check the level of mounting bracket assembly on a pole and adjust the level.

Figure 29. Leveling Mounting Bracket Assembly_3 Sector Pole Type

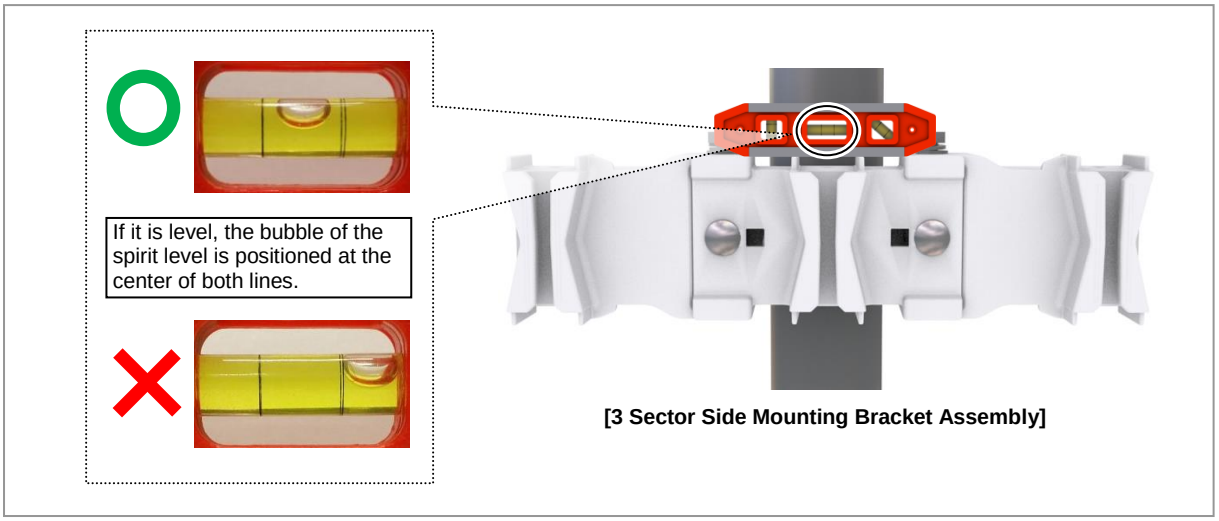

When fixing the pole mounting bracket assembly on a pole, be sure to check the level of bracket. After finishing the installation, you can adjust the level minutely.

When occurring poor leveling, adjust the position of fasteners used to fix the Mounting bracket assembly or its leveling status.

Fixing RRH

For 1 Sector

The method for installing the 1 sector RRH is sorted into standard installation and side installation.

To fix RRH_1 Sector Pole Type (Standard & Side Installation)

Copyright © 2017, All Rights Reserved.

5 Make sure you have the following items:

Table 12. Fixing RRH_1 Sector Pole Type (Standard & Side Installation)

Category	Description	
Parts	M10 × 25L Hex. Bolt (washer assembly)	1 EA
Recommended Torque Value	M10 Hex. Bolt	217 lbf·in (250 kgf·cm)
Working Tools	Torque Wrench (100~400 lbf·in), Torque Wrench Spanner head (apply Hex. Head: 17 mm), Spanner (17 mm)	

6 Hang the unit bracket hook of RRH side on the mounting bracket_front hook's groove and fix it using fasteners.

Figure 30. Fixing RRH_1 Sector Pole Type (Standard Installation)

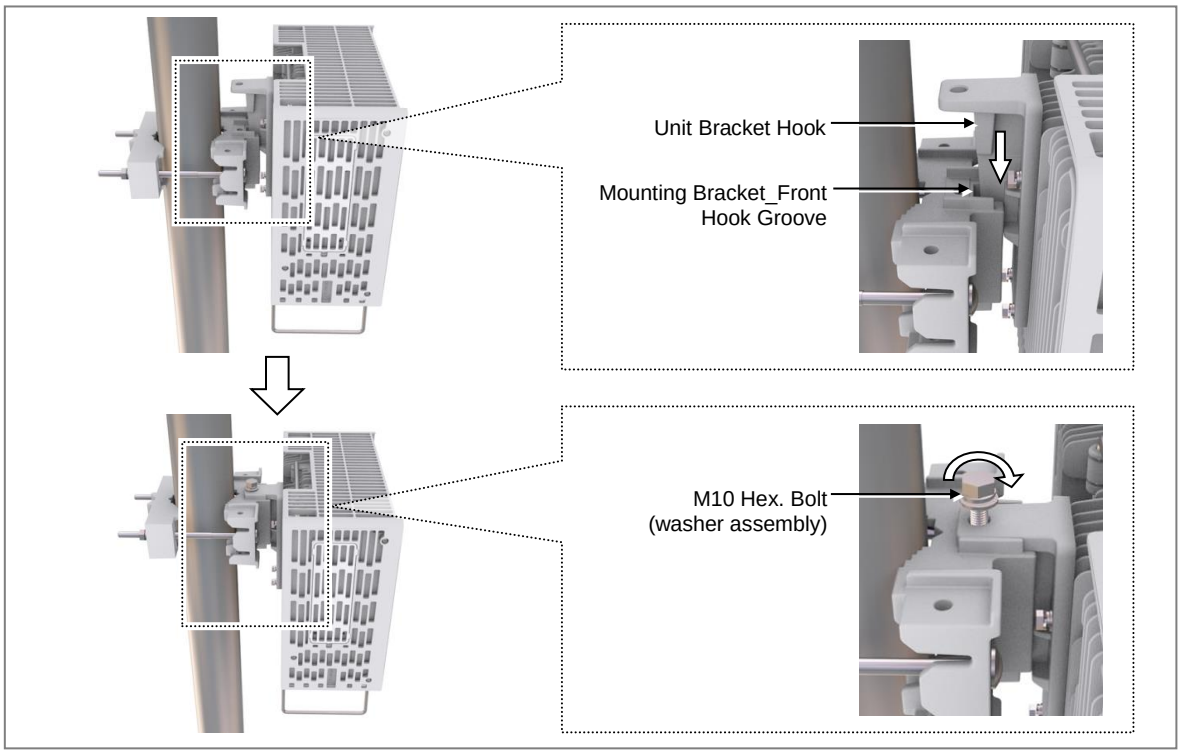

Copyright © 2017, All Rights Reserved.

Figure 31. Fixing RRH_1 Sector Pole Type (Side Installation)

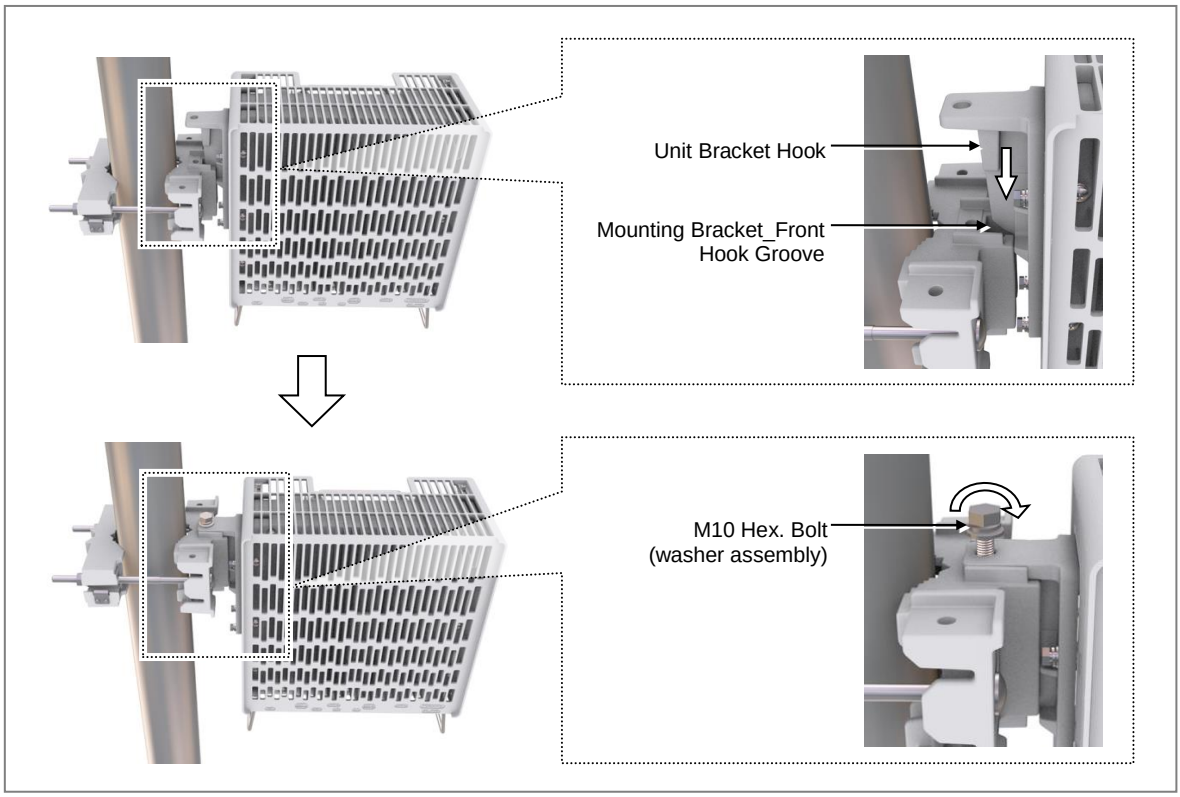

For 3 Sector

3 sector RRH can be installed by only side installation.

To fix RRH_3 Sector Pole Type

1 Make sure you have the following items:

Table 13. Parts and Tools for fixing RRH_3 Sector Pole Type

Category	Description	
Parts	M10 × 25L Hex. Bolt (washer assembly)	3 EA
Recommended Torque Value	M10 Hex. Bolt	217 lbf·in (250 kgf·cm)
Working Tools	Torque Wrench (100~400 lbf·in), Torque Wrench Spanner head (apply Hex. Head: 17 mm), Spanner (17 mm)	

Check the location to install the RRH.

Copyright © 2017, All Rights Reserved.

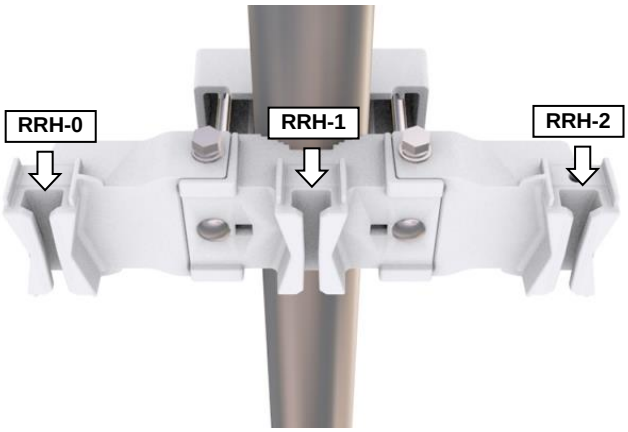

Fix the RRH according to the order of [RRH-0 → RRH-1 → RRH-2].

2 Hang the unit bracket hook of RRH_0 side on the mounting bracket_front hook's groove and fix it using fasteners.

Copyright © 2017, All Rights Reserved.

Figure 32. Fixing RRH_3 Sector Pole Type (1)

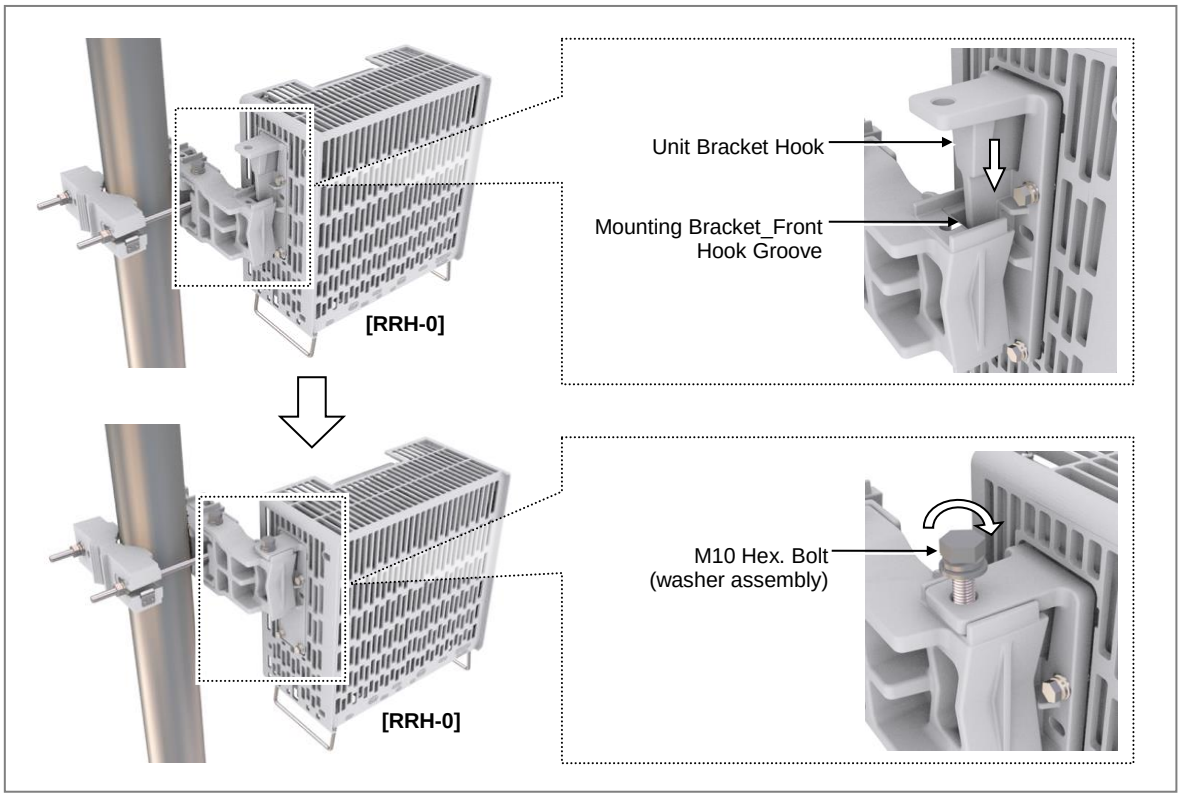

3 Fix RRH-1 and RRH-2 in the same way as the RRH_0.

Figure 33. Fixing RRH_3 Sector Pole Type (2)

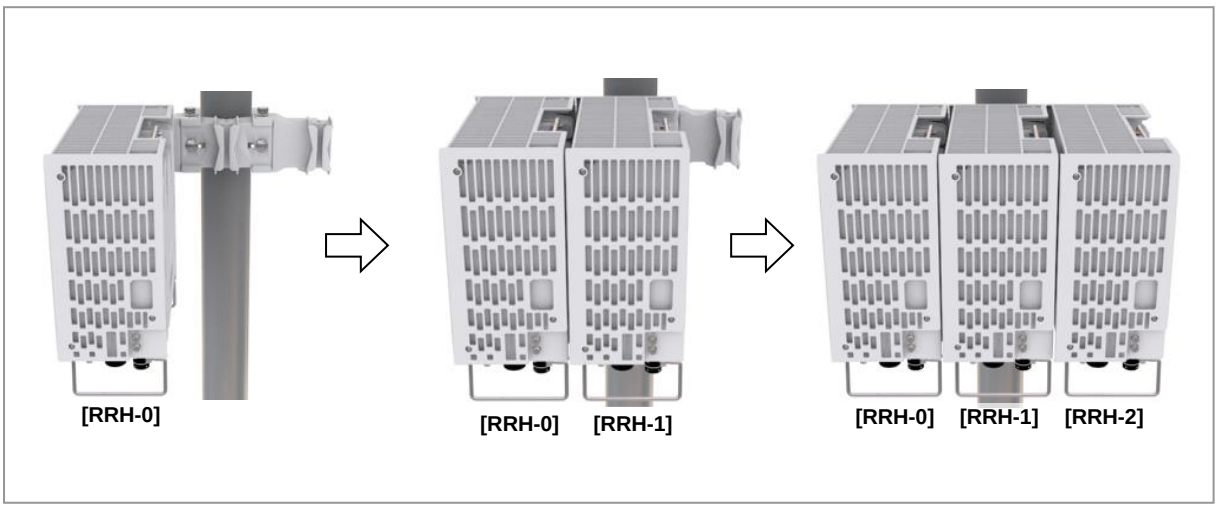

Copyright © 2017, All Rights Reserved.

Fixing Wall Type

Marking and Drilling for Wall Mounting

To mark on a wall

1 Make sure you have the following items:

Table 14. Tools for Marking

Category	Description
Working Tools	Tape Measure, Permanent Maker, Level

To mount the system on a wall, perform the leveling test by referring to System Leveling to check the positions are marked to be horizontal or vertical before drilling. If the result shows they are not horizontal or vertical, modify the marking positions.

When the position where the system will be placed is determined, place the system on that position and then mark the positions where anchor bolts will be fixed. This will reduce marking error range.

2 Check the distance between the location for fixing the RRH and anchor bolt hole.

Copyright © 2017, All Rights Reserved.

Figure 34. RRH marking dimensions_1 Sector Wall Type

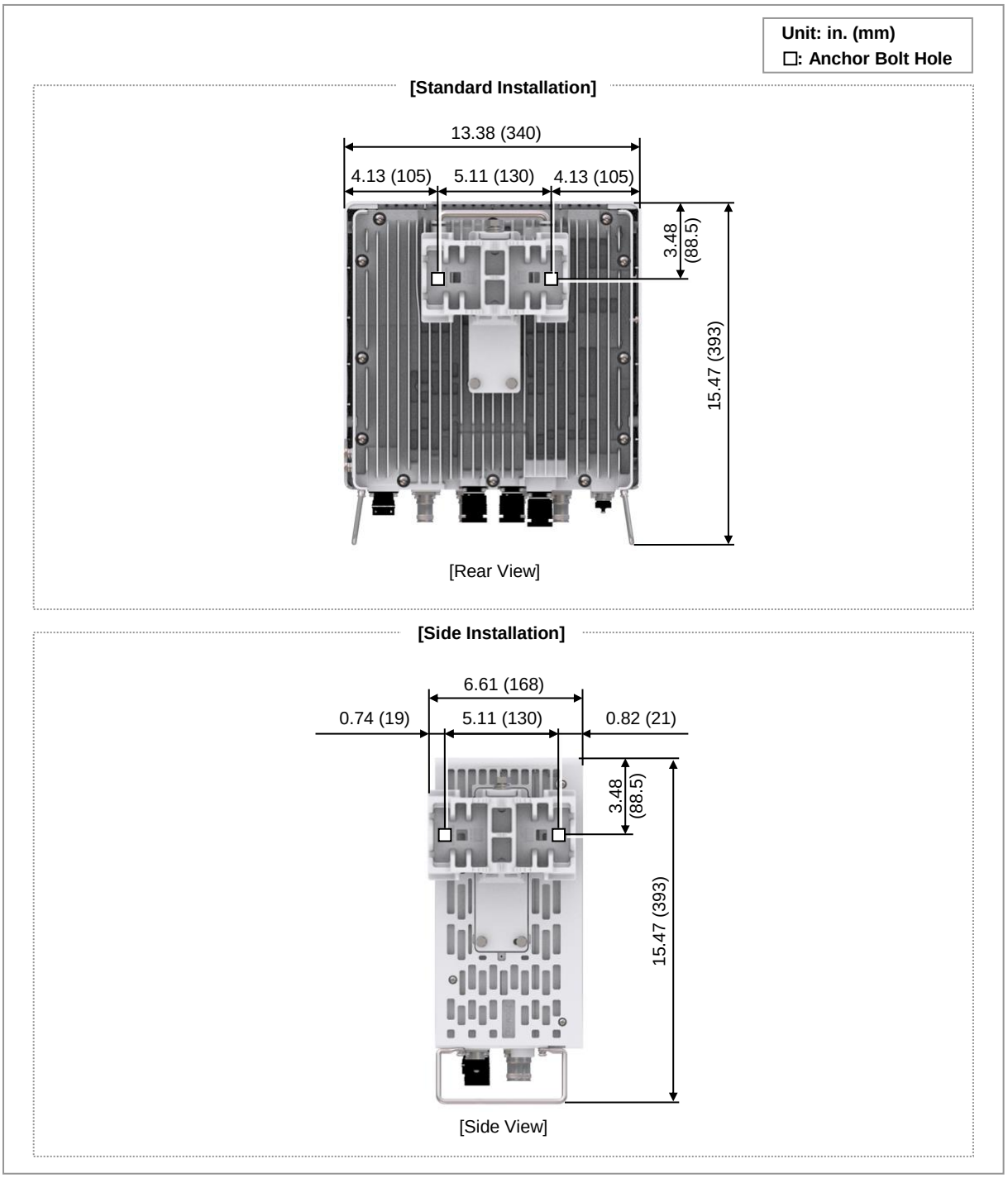

Copyright © 2017, All Rights Reserved.

Figure 35. RRH marking dimensions_3 Sector Wall Type

3 Place a mounting bracket on the fixing location, Check the level status using a level and adjust the level of bracket assembly.

4 If the level status is normal, mark the anchor bolt holes on a wall.

Copyright © 2017, All Rights Reserved.

Figure 36. Marking_Wall Type

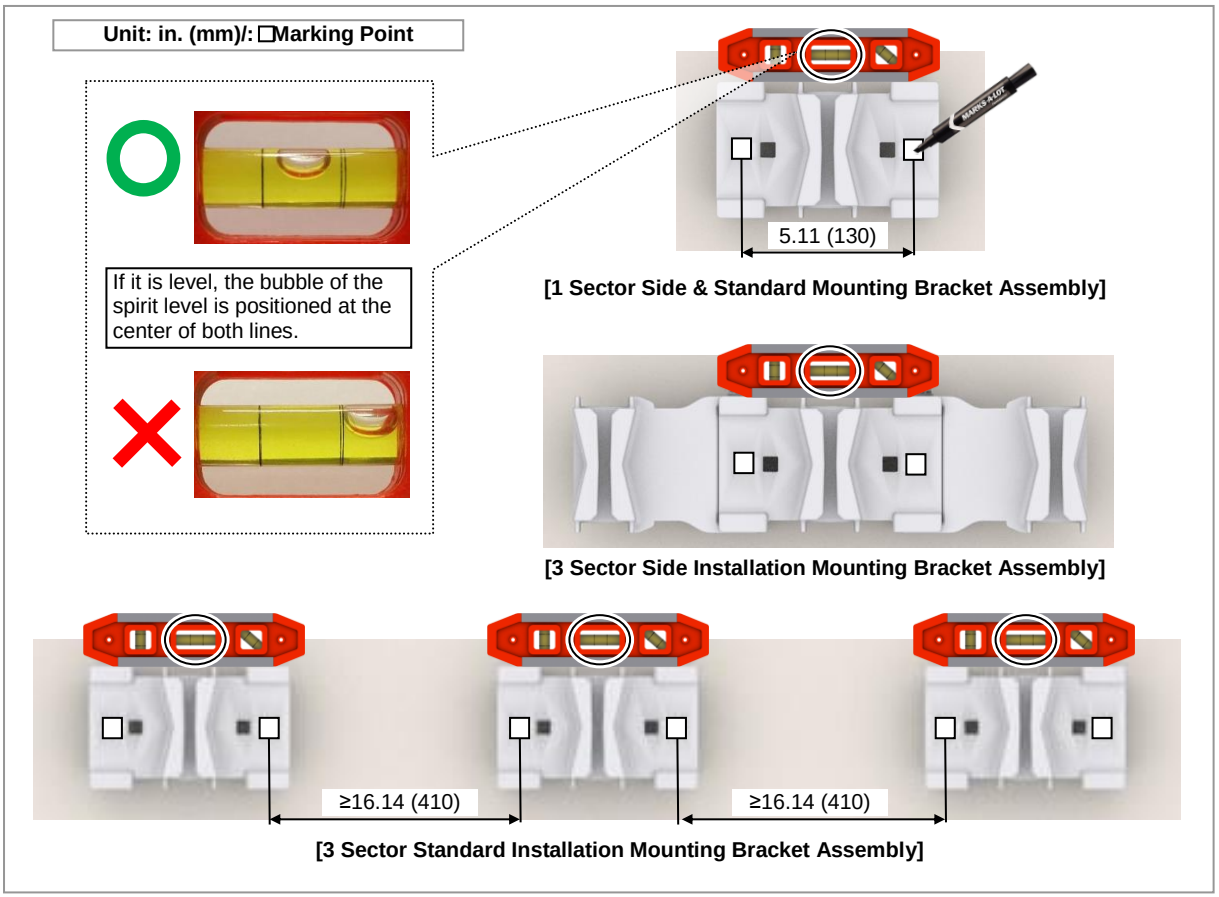

To drill anchor holes and fix anchors

1 Make sure you have the following items:

Table 15. Parts and Tools for Drilling & Anchoring

Category	Description	
Parts	M10 Strong Anchor	2 EA
Woking Tools	Hammer Drill, Concrete Drill Bit [0.55 in. (14 mm)], Vacuum Cleaner, Hammer, Anchor Punch (For M10 Strong Anchor)	

Table 16. Anchor Bolt Drill Bits and Hole Depth

Category	Anchor Bolt	Drill Bits	Hole Depth
RRH (Wall Type)	M10	0.55 in. (14 mm)	1.73 in. (44 mm)

[Anchor Hole Cross Section]

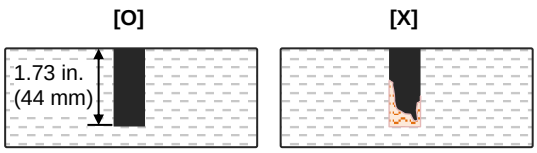

* Remove the debris from the drilled hole.

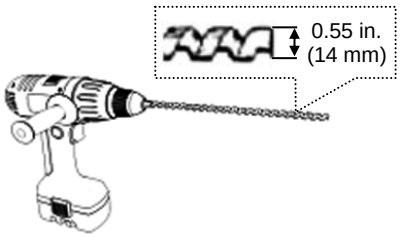

Copyright © 2017, All Rights Reserved.

2 Drill anchor holes at marked points with removing dust from the holes using a cleaner. Fix strong anchor to the drilled hole.

Figure 37. Drilling & Anchoring

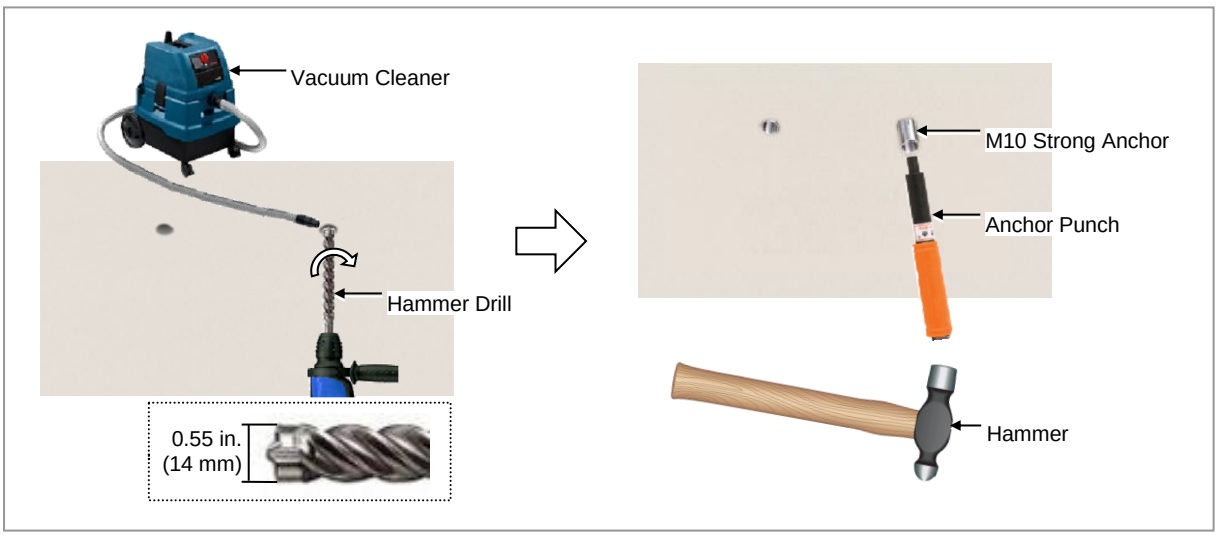

Fixing Mounting Bracket

Check the Mounting Bracket_front type per installation type and sector type before installing the Mounting bracket.

Table 17. Mounting Bracket type per installation type and sector type_Wall Type

Sector Type	Installation Type	Bracket Type	Unit
1 Sector	Standard Installation	Mounting Bracket_Front	1 EA
3 Sector		Mounting Bracket_Front	3 EA
1 Sector	Side Installation	Mounting Bracket_Front	1 EA
3 Sector		3 Sector Mounting Bracket Assembly_Front	1 EA

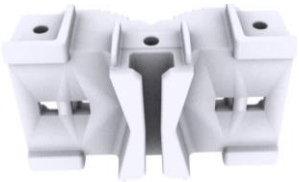

[Mounting Bracket_Front]

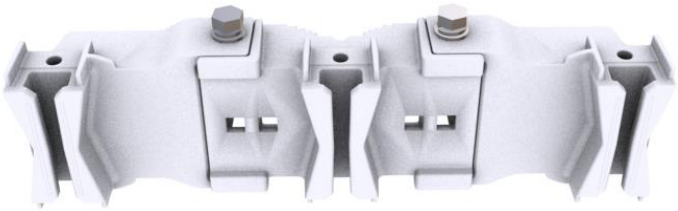

[3 Sector Mounting Bracket Assembly_Front]

When fixing the mounting bracket_front or 3 sector mounting bracket assembly_front on a wall, ‘A’ side should stick on the wall.

Copyright © 2017, All Rights Reserved.

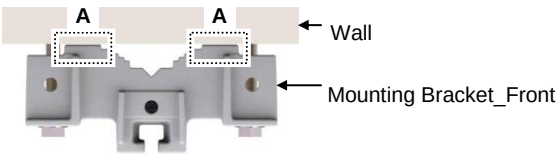

[Top View]

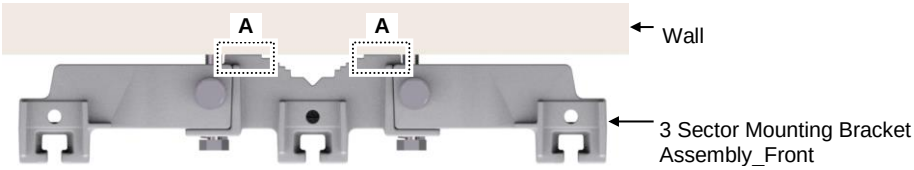

[Top View]

For 1 Sector

The way to fix 1 sector mounting bracket is as follows:

To fix Mounting Bracket_1 Sector Wall Type

1 Make sure you have the following items:

Table 18. Parts and Tools for fixing Mounting Bracket_1 Sector Wall Type

Category	Description		
Parts	Mounting Bracket_Front		1 EA
	Fastener	M10 Plain Washer M10 Spring Washer M10 × 70L Hex. Bolt	2 EA 2 EA 2 EA
Recommended Torque Value	M10 Hex. Bolt		217 lbf·in (250 kgf·in)
Working Tools	Torque Wrench (100~400 lbf·in), Torque Wrench Spanner head (apply Hex. Head: 17 mm), Spanner (17 mm)		

2 Place the mounting bracket_front along with the fixed strong anchors and fix it using fasteners.

Copyright © 2017, All Rights Reserved.

Figure 38. Fixing Mounting Bracket_1 Sector Wall Type

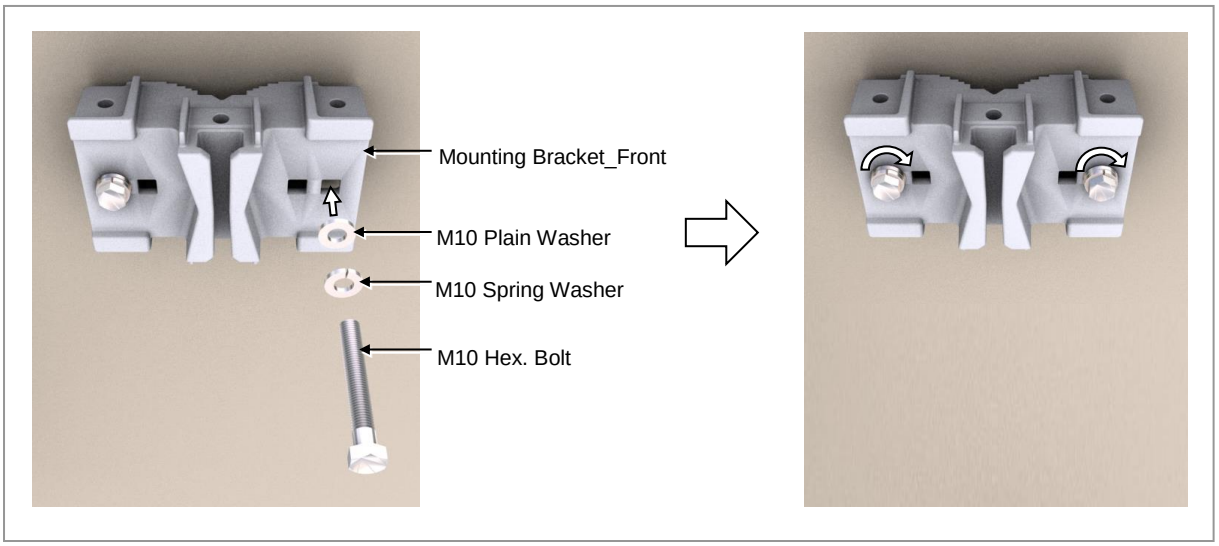

For 3 Sector

To fix Mounting Bracket_3 Sector Wall Type (Standard Installation)

1 Make sure you have the following items:

Table 19. Parts and Tools for fixing Mounting Bracket_3 Sector Wall Type (Standard Installation)

Category	Description		
Parts	Mounting Bracket_Front		3 EA
	Fastener	M10 Plain Washer M10 Spring Washer M10 × 70L Hex. Bolt	2 EA/Mounting Bracket_Front 2 EA/Mounting Bracket_Front 2 EA/Mounting Bracket_Front
Recommended Torque Value	M10 Hex. Bolt		217 lbf·in (250 kgf·in)
Working Tools	Torque Wrench (100~400 lbf·in), Torque Wrench Spanner head (apply Hex. Head: 17 mm), Spanner (17 mm)		

2 Place the mounting bracket_front along with the fixed strong anchors and fix it using fasteners.

Copyright © 2017, All Rights Reserved.

Figure 39. Fixing Mounting Bracket_3 Sector Wall Type (Standard Installation)

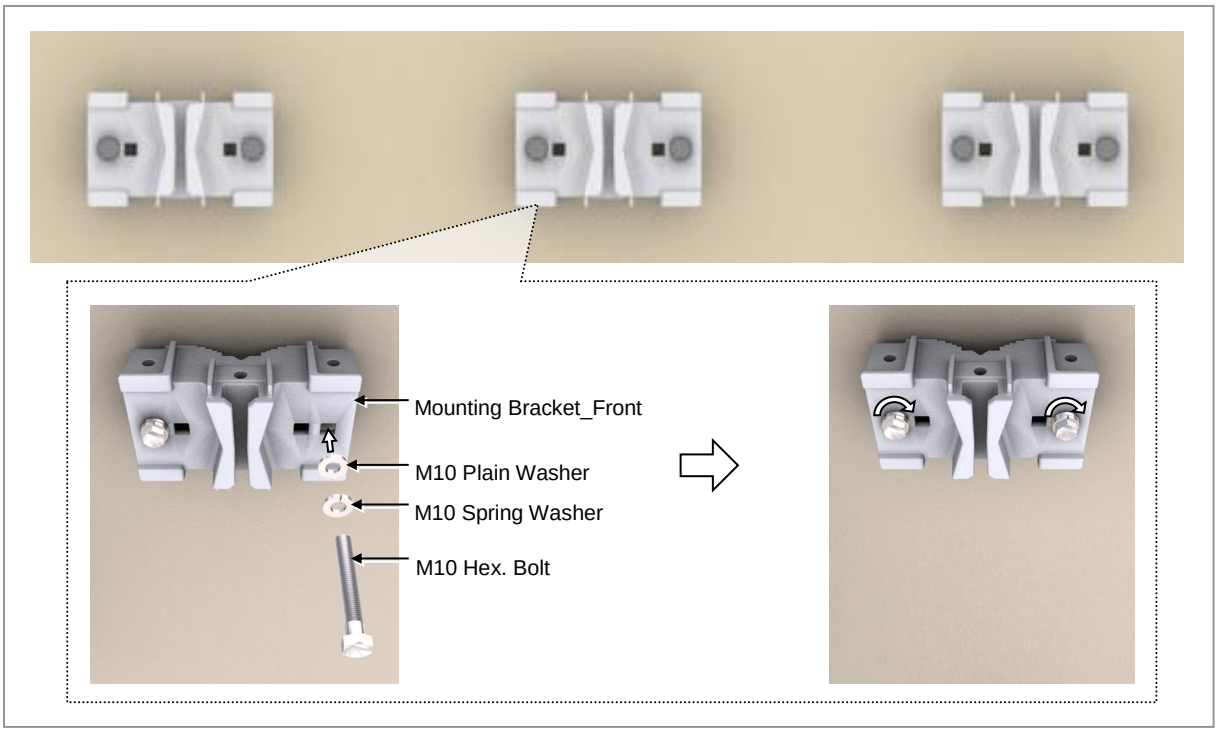

To fix Mounting Bracket_3 Sector Wall Type (Side Installation)

1 Make sure you have the following items:

Table 20. Parts and Tools for fixing Mounting Bracket_3 Sector Wall Type (Side Installation)

Category	Description		
Parts	3 Sector Mounting Bracket Assembly_Front		1 EA
	Fastener	M10 Plain Washer M10 Spring Washer M10 × 70L Hex. Bolt	2 EA 2 EA 2 EA
Recommended Torque Value	M10 Hex. Bolt		217 lbf·in (250 kgf·in)
Working Tools	Torque Wrench (100~400 lbf·in), Torque Wrench Spanner head (apply Hex. Head: 17 mm), Spanner (17 mm)		

2 Place the 3 sector mounting bracket assembly_front along with the fixed strong anchors and fix it using fasteners.

Copyright © 2017, All Rights Reserved.

Figure 40. Fixing Mounting Bracket_3 Sector Wall Type (Side Installation)

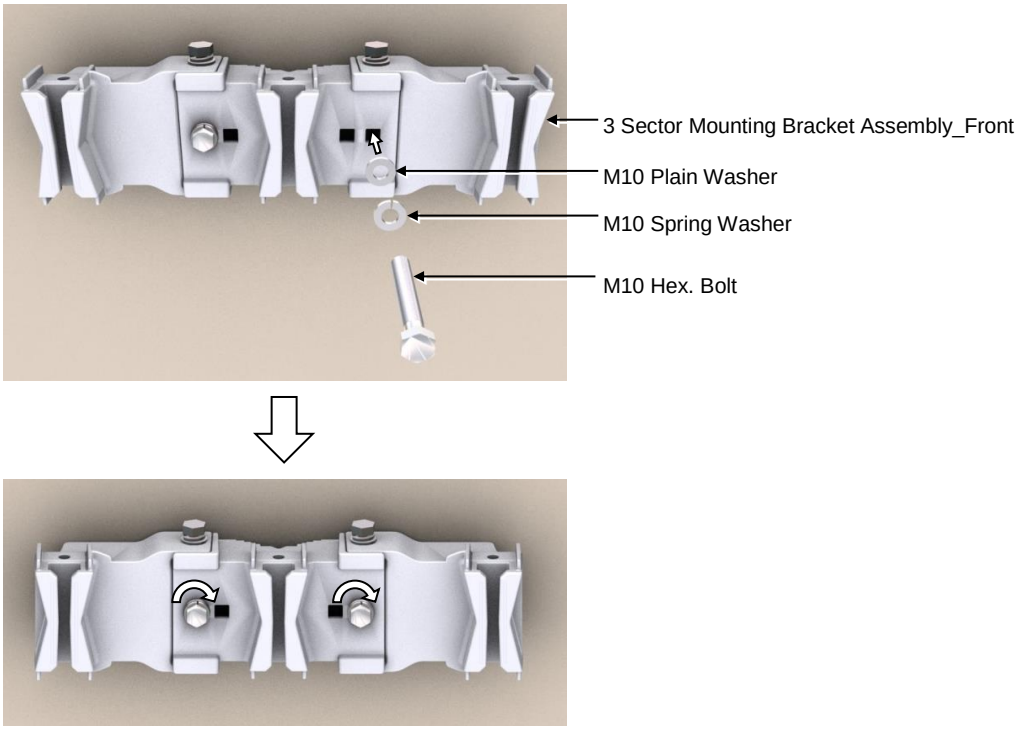

Fixing RRH

For 1 Sector

The method for installing the 1 sector RRH is sorted into standard installation and side installation.

To fix RRH_1 Sector Wall Type (Standard & Side Installation)

1 Make sure you have the following items:

Table 21. Parts and Tools for fixing RRH_1 Sector Wall Type (Standard & Side Installation)

Category	Description	
Parts	M10 × 25L Hex. Bolt (washer assembly)	1 EA
Recommended Torque Value	M10 Hex. Bolt	217 lbf·in (250 kgf·in)
Working Tools	Torque Wrench (100~400 lbf·in), Torque Wrench Spanner head (apply Hex. Head: 17 mm), Spanner (17 mm)	

2 Hang the unit bracket hook of RRH side on the mounting bracket_front hook's groove and fix it using fasteners.

Copyright © 2017, All Rights Reserved.

Figure 41. Fixing RRH_1 Sector Wall Type (Standard Installation)

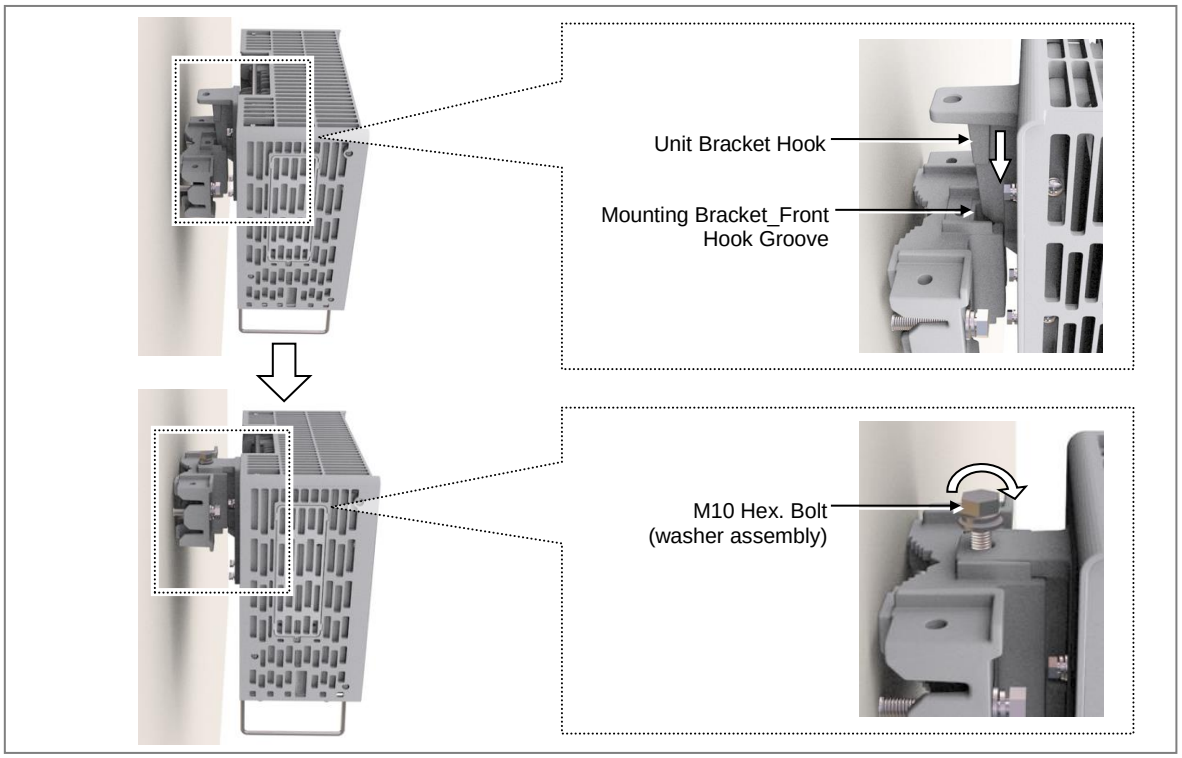

Figure 42. Fixing RRH_1 Sector Pole Type (Side Installation)

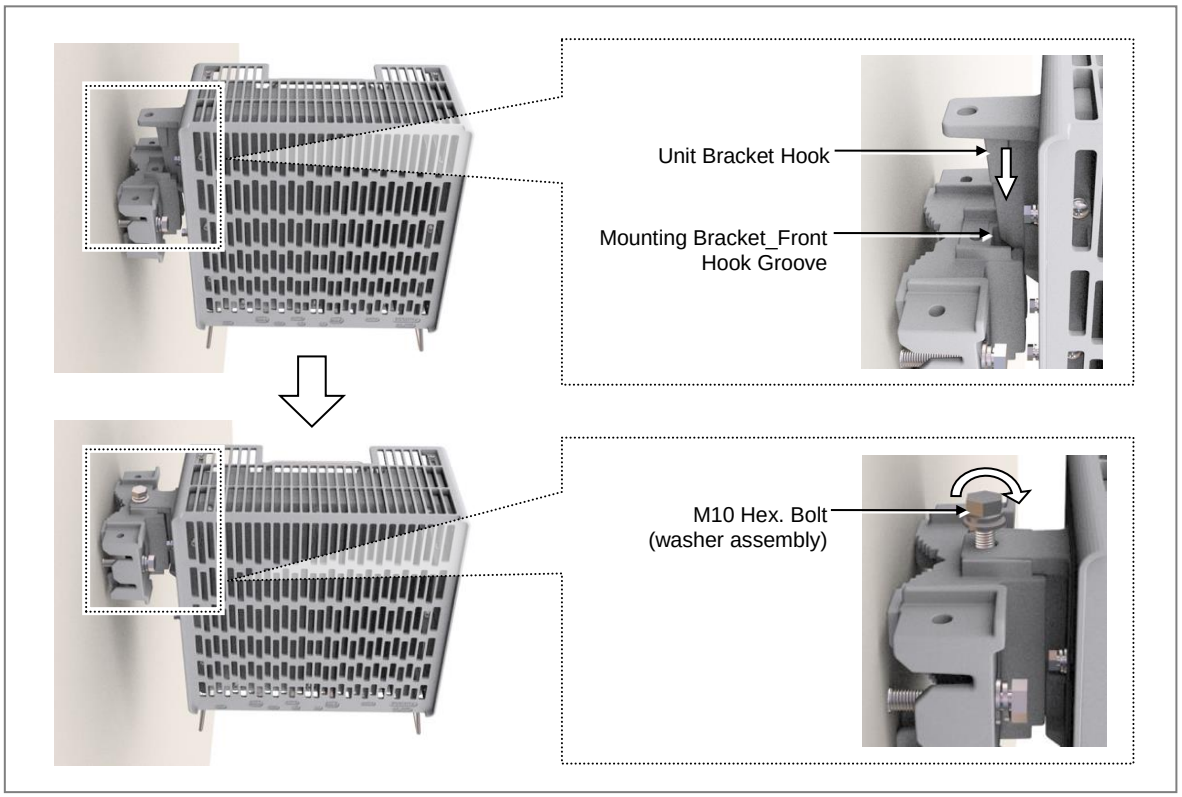

Copyright © 2017, All Rights Reserved.

For 3 Sector

The method for installing the 3 sector RRH is sorted into standard installation and side installation.

To fix RRH_3 Sector Pole Type (Standard Installation)

1 Make sure you have the following items:

Table 22. Parts and Tools for fixing RRH_3 Sector Wall Type (Standard Installation)

Category	Description	
Parts	M10 × 25L Hex. Bolt (washer assembly)	3 EA
Recommended Torque Value	M10 Hex. Bolt	217 lbf·in (250 kgf·in)
Working Tools	Torque Wrench (100~400 lbf·in), Torque Wrench Spanner head (apply Hex. Head: 17 mm), Spanner (17 mm)	

Check the location to install the RRH.

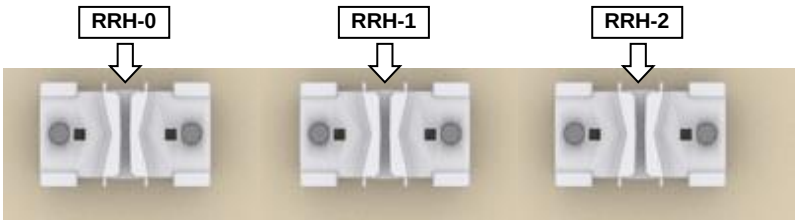

Fix the RRH according to the order of [RRH-0 → RRH-1 → RRH-2].

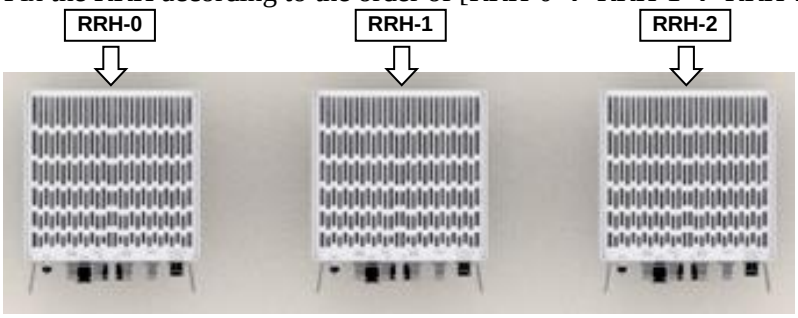

2 Hang the unit bracket hook of RRH_0 side on the mounting bracket_front hook's groove and fix it using fasteners.

Copyright © 2017, All Rights Reserved.

Figure 43. Fixing RRH_3 Sector Wall Type (Standard Installation 1)

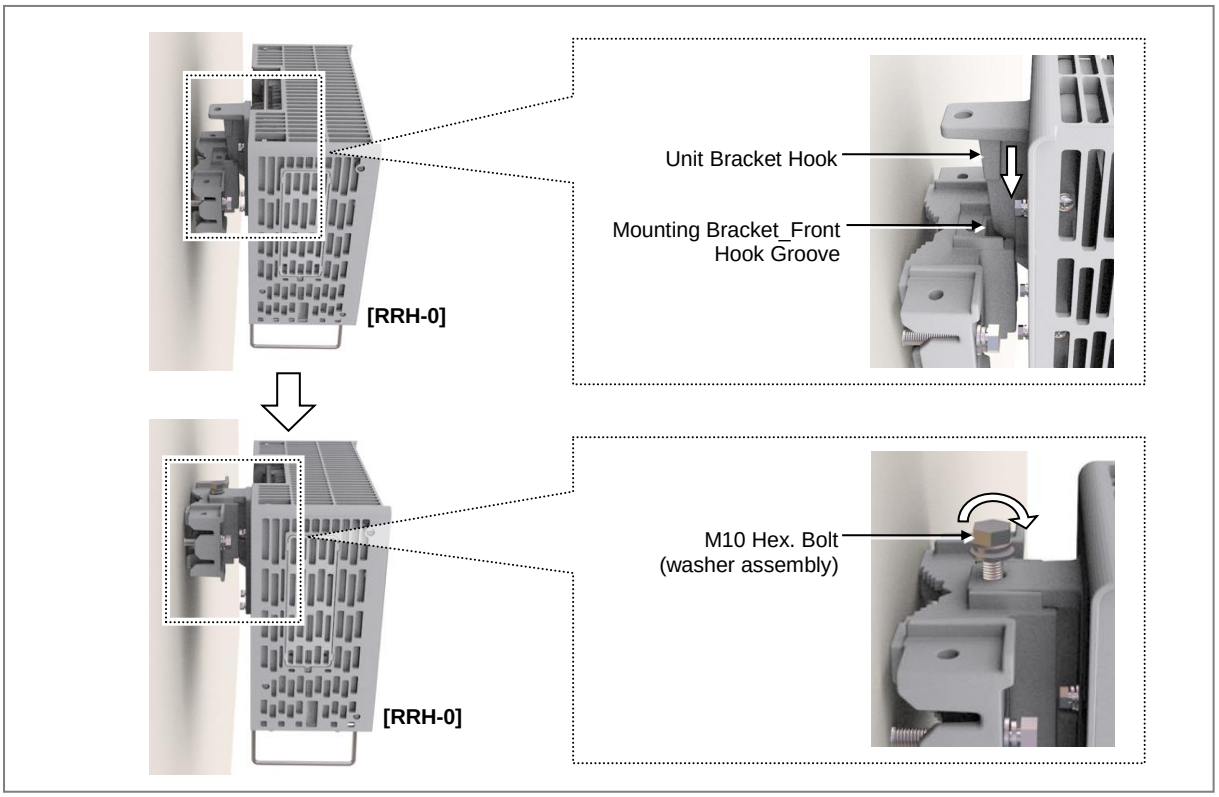

3 Fix RRH-1 and RRH-2 in the same way as the RRH_0.

Figure 44. Fixing RRH_3 Sector Wall Type (Standard Installation 2)

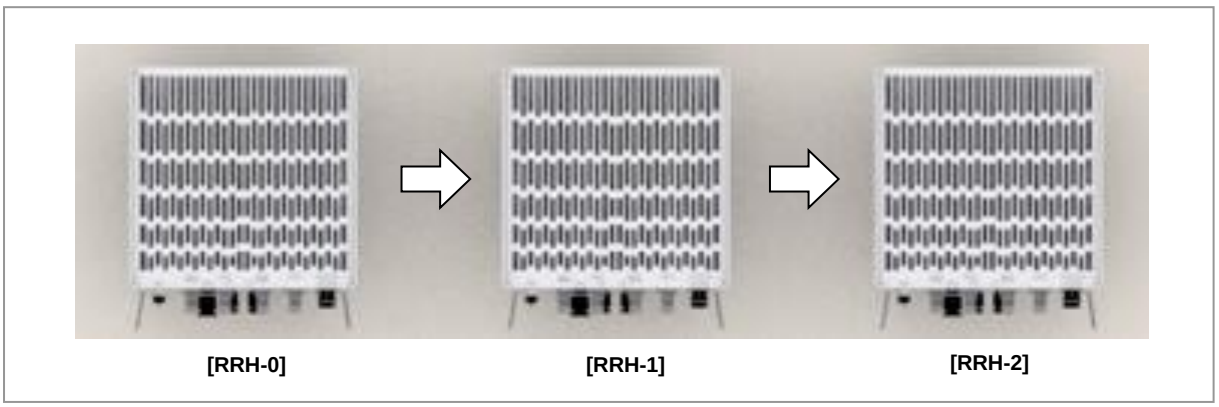

To fix RRH_3 Sector Pole Type (Side Installation)

1 Make sure you have the following items:

Table 23. Parts and Tools for fixing RRH_3 Sector Wall Type (Side Installation)

Category	Description	
Parts	M10 × 25L Hex. Bolt (washer assembly)	3 EA
Recommended Torque Value	M10 Hex. Bolt	217 lbf·in (250 kgf·in),

Copyright © 2017, All Rights Reserved.

Category	Description
Working Tools	Torque Wrench (100~400 lbf·in), Torque Wrench Spanner head (apply Hex. Head: 17 mm), Spanner (17 mm)

Check the location to install the RRH.

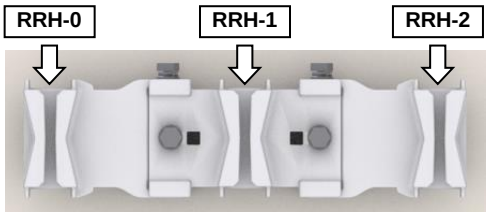

Fix the RRH according to the order of [RRH-0 → RRH-1 → RRH-2].

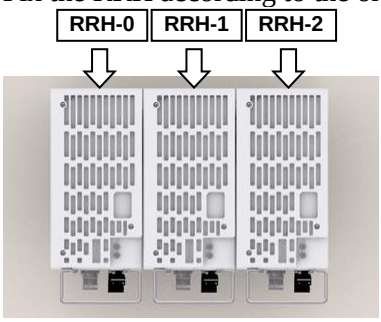

2 Hang the unit bracket hook of RRH_0 side on the mounting bracket_front hook's groove and fix it using fasteners.

Copyright © 2017, All Rights Reserved.

Figure 45. Fixing RRH_3 Sector Wall Type (Side Installation 1)

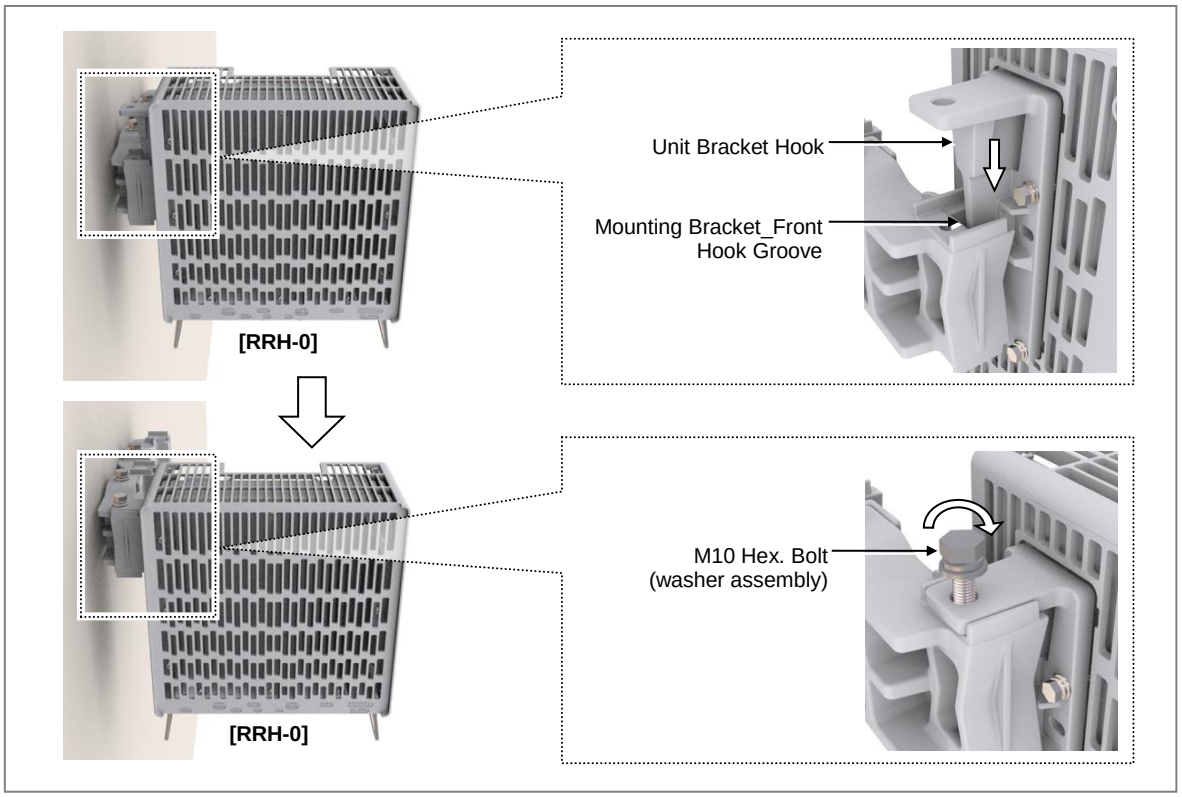

3 Fix RRH-1 and RRH-2 in the same way as the RRH_0.

Figure 46. Fixing RRH_3 Sector Wall Type (Side Installation 2)

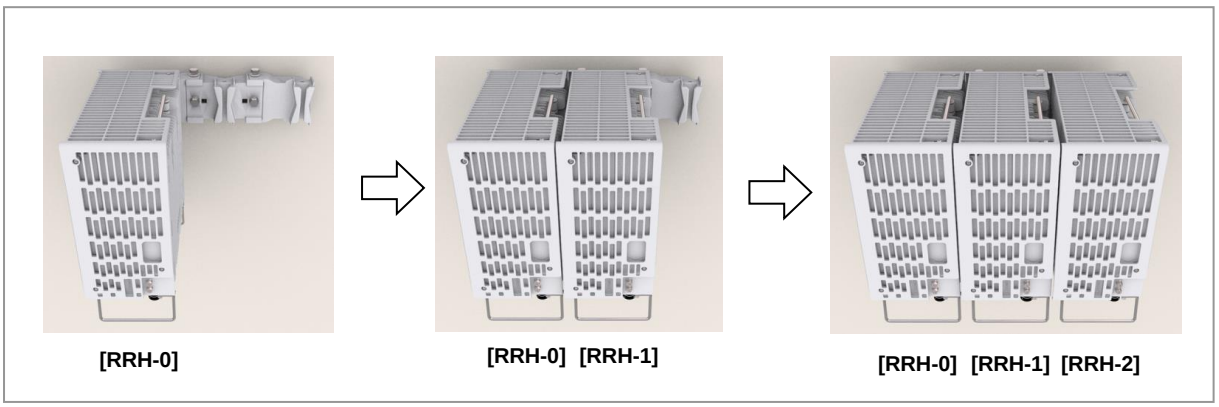

Copyright © 2017, All Rights Reserved.

Chapter 3 Connecting Cables

Cabling Procedure

The procedure to connect system cables is as follows:

Figure 47. Procedure to Connect System Cable

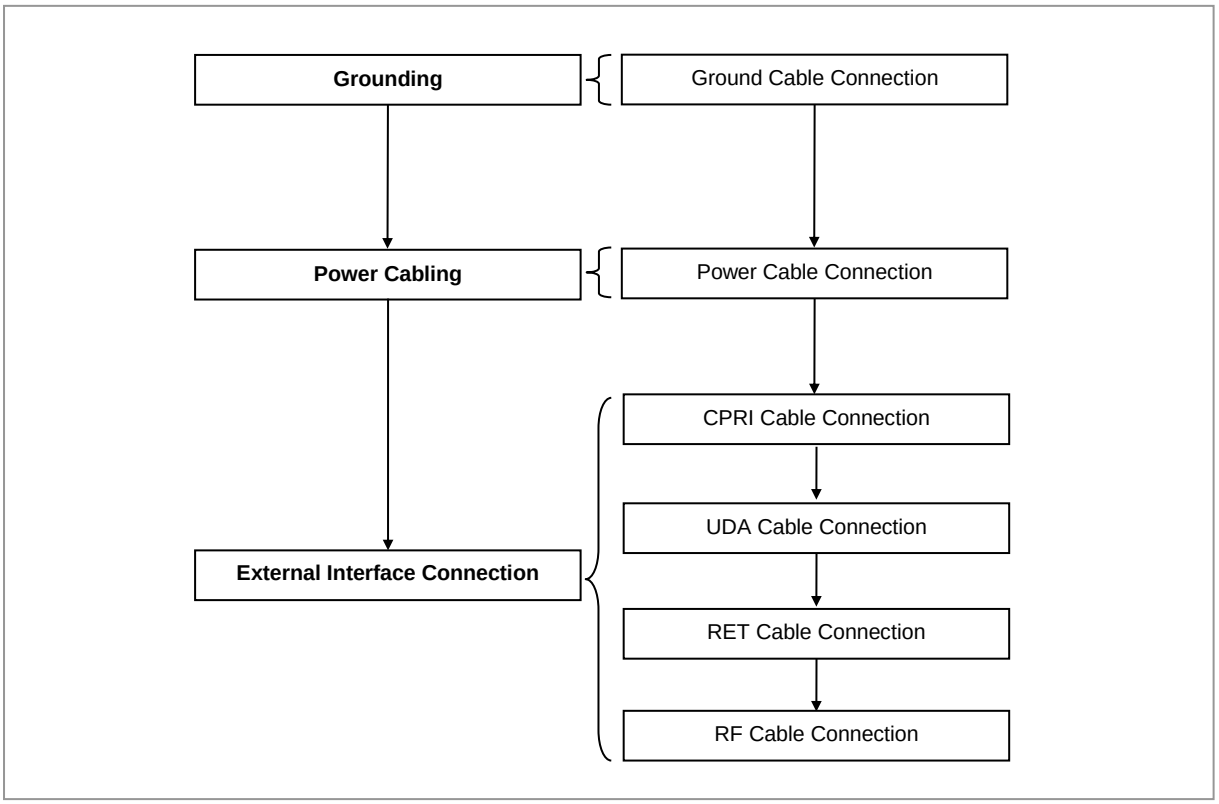

Copyright © 2017, All Rights Reserved.

Guidelines for Cable Connections

The procedure for cable connections is as follows:

Figure 48. Cable Connection Procedure

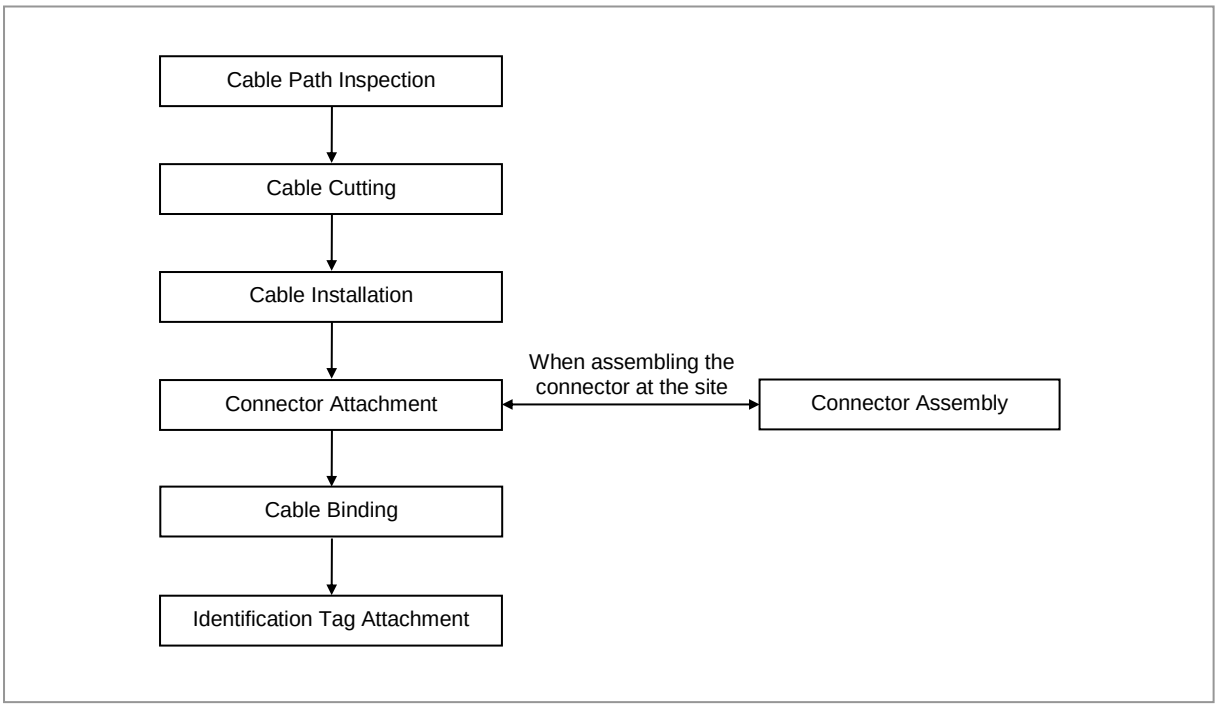

When cutting the cable after installation, make sure that the connector is disconnected. Installation of the cable with the connector connected to the system may cause contact failure or damage to the connector assembled to the system and the cable due to cable tension or the operator's mistakes.

The sequence of cable cutting and installation of the cable workflow can be changed depending on the field situation such as 'cutting after installing' or 'installing after cutting'.

Cable Path Inspection

When installing a cable that connects between the rectifier, Main Ground Bar (MGB), and backhaul device, and so on within the system, the cable path, length and the cable installation method, and so on must be inspected.

Follow these guidelines when inspecting the cabling path.

- A minimum cable length must be selected provided that it does not affect the cable installation and maintenance.

Copyright © 2017, All Rights Reserved.

- The cable must be placed in a location where it will not be damaged by external factors (power line, flooding, footpaths, and so on).
- In areas where the cable may be damaged by external factors, ensure that measures are taken to prevent damage to the cable (cable tray, ducts, flexible pipe, and so on).

Cable Cutting

Measure the exact distance, carefully checking the route, and cut the cable using a cutting tool.

Follow these guidelines when cutting the cable.

- Cut the cable to the length determined in the Cable Path Inspection step.
- Use a dedicated cable cutting tool.
- Cut the cable at right angles.
- Be careful to keep the cable away from any moisture, iron, lead, dust, or other foreign material when cutting.
- Remove any foreign material attached to the cable using solvent and a brush.

Cable Installation

Cable installation involves running the cable along the cabling path to the target connector of the system or an auxiliary device after cable path inspection and cable cutting have been completed.

Follow these guidelines when installing a cable:

- Be careful not to damage the cable.
- If the cable is damaged, cut out the damaged section before installing, or replace the cable.
- Run the cable so that it is not tangled. In particular, when installing a cable from a horizontal section to a vertical section, be careful not to reverse the upper and lower lines of the cable.
- Always use the maximum curvature radius possible, and make sure that the minimum curvature radius specification is complied with.
- If the cable needs to be protected, use for example, a PVC channel, spiral sleeve, flexible pipe, cable rack, and so on.
- Install the DC power cable and data transmission cable away from the AC power cable to prevent electromagnetic induction.

Table 24. Recommended Minimum Allowed Cable bend Radius

No	Type	Allowed Cable Bend Radius	
1	Ground/Power Cable	8 times of the cable external diameter	
2	Optical Cable (indoor)	Unloaded Condition (Installed)	Loaded Condition (During

Copyright © 2017, All Rights Reserved.

No	Type	Allowed Cable Bend Radius	
		: 20 times of cable external diameter	Installation) : 40 times of cable external diameter
3	Optical Cable (Outdoor)	Unloaded Condition (Installed) : 10 times of cable external diameter	Loaded Condition (During Installation) : 20 times of cable external diameter
4	UTP/FTP/S-FTP Cable	4 times of the cable external diameter	
5	1/2 in. Feeder Line (Flexible)	4.92 in. (125 mm)	

※ If the allowed cable bend radius is specified by the manufacturer, comply with the bend radius specified.

Cable Binding

Cable binding involves fixing and arranging an installed cable using binding thread, cable ties, binding wire, and ram clamps, and so on.

Follow these guidelines when binding a cable.

- Be careful not to damage the cable during binding.
- Use appropriate cable binding tools according to the target location (indoor or outdoor, and so on) and the type of the cable (power supply cable, optical cable, feeder line, and so on).
- Do not let the cutting section of a cable tie and binding line, and so on be exposed to the outside. This may cause damage to cables or personal injury. Make sure that the cutting sections of cable ties and binding lines, and so on are not exposed to the outside.
- Cut off the remainder of the cable thread by leaving about 50 mm of extra length to prevent the knot from easily getting untied.
- If there is a danger that contact failure may occur in a connector connection due to tension, bind the cable at the closest location to the connector.

Connector Attachment

Connector attachment involves assembling a connector to an installed cable or to a device on the site.

Follow these guidelines when attaching a connector.

- Make sure operator is fully aware of the connector assembly method before assembling a connector. Assemble the connector in accordance with its pin map.
- Each connector has a hook to prevent its core positions from being changed.
- Check the corresponding grooves before connecting a connector to another connector.
- Use a heat shrink tube at a connector connection for cables that are installed outdoor, such as feeder lines, to prevent water leakage and corrosion from

Copyright © 2017, All Rights Reserved.

occurring at the part exposed to the outside.

- Connect each cable of the connector assembly in a straight line.
- Be careful when connecting a cable so that contact failure does not occur at a connector connection due to tension.

Identification Tag Attachment

Identification tag attachment involves attaching a marker cable tie, nameplate, and label, and so on to the both ends of a cable (connections to a connector) to identify its use and cabling path.

Follow these guidelines when attaching an identification tag.

- When installing a cable outdoor, use relief engraving and coated labels, and so on to prevent the markings from being erased.
- Since the form and attachment method for identification tags are different for each provider, consult with the provider before attaching them.

When connecting the cables, always connect the ground cable first. If worker contacts the equipment, connect a cable or perform maintenance without connecting the ground cable, the system can be damaged or a worker may be injured due to static electricity and short circuit.

When performing cable work for the system, proceed with the ground work before any other work to prevent errors occurring due to static electricity and other reasons.

After completing cable installation, unused port should be capped.

When installing, take care not to overlap or tangle the cables; also, consider future expansion. Install the DC power cable and data transmission cable away from the AC power cable to prevent electromagnetic induction.

Make sure the work is done by personnel properly trained for the cabling job.

Copyright © 2017, All Rights Reserved.

Cabling Diagram

The cabling diagram of the RRH is as follows:

Figure 49. Cable Diagram

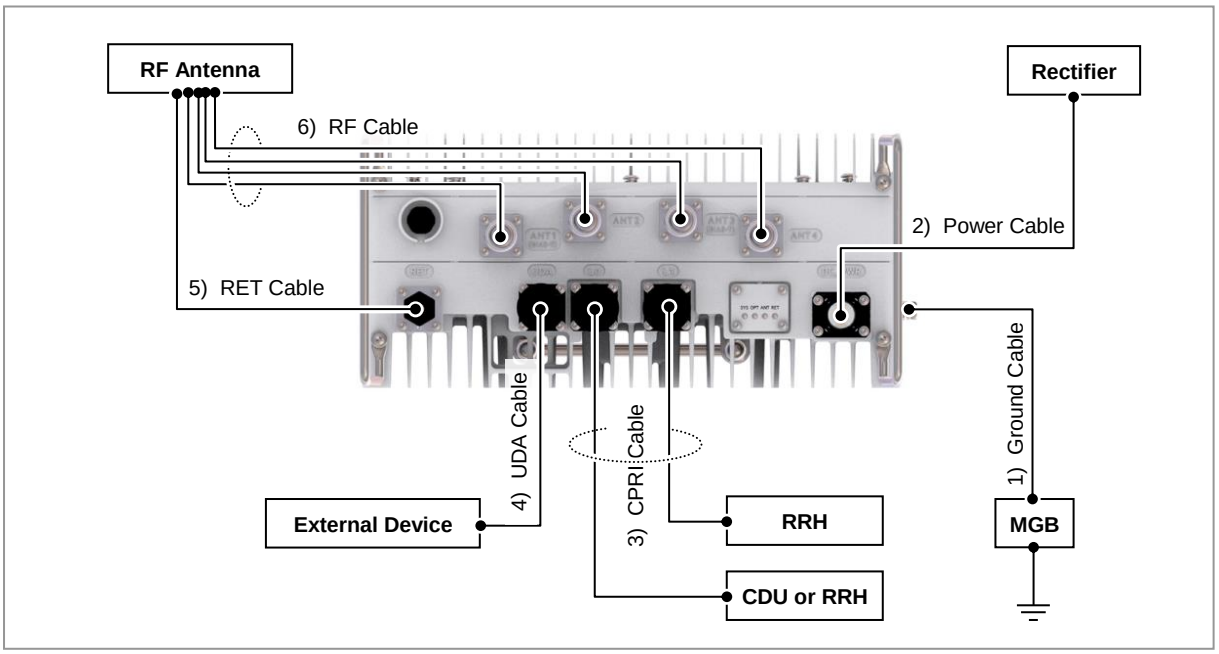

Table 25. RRH Connection Cable

From	To	Cable
MGB	RRH	**1** Ground Cable : AWG8 × 1C
RRH	Rectifier	**2** Power Cable : AWG 8 or AWG 10 × 2C
	CDU or RRH	**3** CPRI Cable : Single Mode (Outdoor Type)
	RRH	
	External Device	**4** UDA Cable Assembly
	RF Antenna	**5** RET Cable Assembly
		6 RF Cable : 1/2 in. Feeder Line

The inlet hole finishing method of external equipment must be progressed after consultation with operation company in case of the cable connected to external equipment. (Optical distribution box, etc)
- The Cable: Power Cable, CPRI Cable, UDA Cable

Copyright © 2017, All Rights Reserved.

Grounding

Grounding is the process of operating an electronic system (for example. power supplying system, communication system, and control system) stably from a lightning, transient-current, transient-voltage and electric noise and of preventing injury from electric shock.

Ground equipment minimizes the electrical potential of the electronic device to that of the ground, which is zero electrical potential, so that it can prevent the device from occurring electrification.

Connect the ground cable first. In cabling, the connection of cables without the connection to the ground cable may cause damage of the equipment or bodily injury to personnel.

The purposes of the ground construction are as follows:

- To prevent human life and the system from over-current, over-voltage, and lightning
- To provide a discharge path for surge voltage generated by lightning and power switch
- To protect the system from static electricity
- To eliminate or minimize the high-frequency potential in the system housing
- To provide a conductor for the balance and stability of high-frequency current
- To stabilize the potential of the circuit against the ground

Connecting Ground Cable

To connect Ground Cable

1 Make sure you have the following items:

Table 26. Parts and Tools for connecting Ground Cable

Category	Description	
Installation Section	MGB~RRH Ground Terminal	
Cable	AWG 8 × 1C	
Heat Shrink Tube (Spec/Color/Length)	Φ 0.47 in. (12 mm)/Clear/1.96 in. (50 mm)	
Pressure Terminal	MGB	Checking MGB specifications per site and preparing connecting parts
	RRH	AWG 8, 2 Hole, Hole diameter:1/4 in.(6.4 mm), Hole spacing: 0.63 in. (16 mm)
Fastener	MGB	Checking MGB specifications per site and preparing connecting parts
	RRH	M6 × 14L SEMS (Hex. +)/2 EA
Recommended Torque Value	M6 SEMS	43 lbf·in (50 kgf·cm)

Copyright © 2017, All Rights Reserved.

Category	Description
Working Tools	Cable Cutter, Wire Stripper, Crimping tool, Heating Gun, Nipper, Screw Driver ('+', No. 3), Torque Driver (20~90 lbf·in.), Screw Driver Bit ('+', No. 3)

For the pressure terminal or the cable, the UL Listed products or equivalent should be used.
Ex) Manufacturer-Panduit
RRH: AWG8 Pressure Terminal (LCD8-14A-L)

2 Install a ground cable from the MGB to the RRH ground terminal.

Figure 50. Connecting Ground Cable (1)

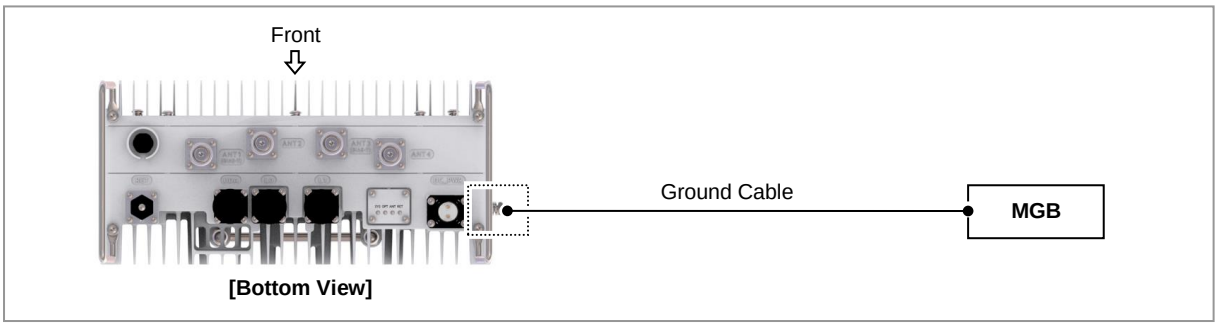

3 Assemble a pressure terminal and a heat shrink tube at the end of the RRH ground cable.

4 Align the pressure terminal to the mounting hole of the RRH ground terminal.

5 Firmly fix the pressure terminal onto the RRH ground terminal using fasteners.

Copyright © 2017, All Rights Reserved.

Figure 51. Connecting Ground Cable (2)

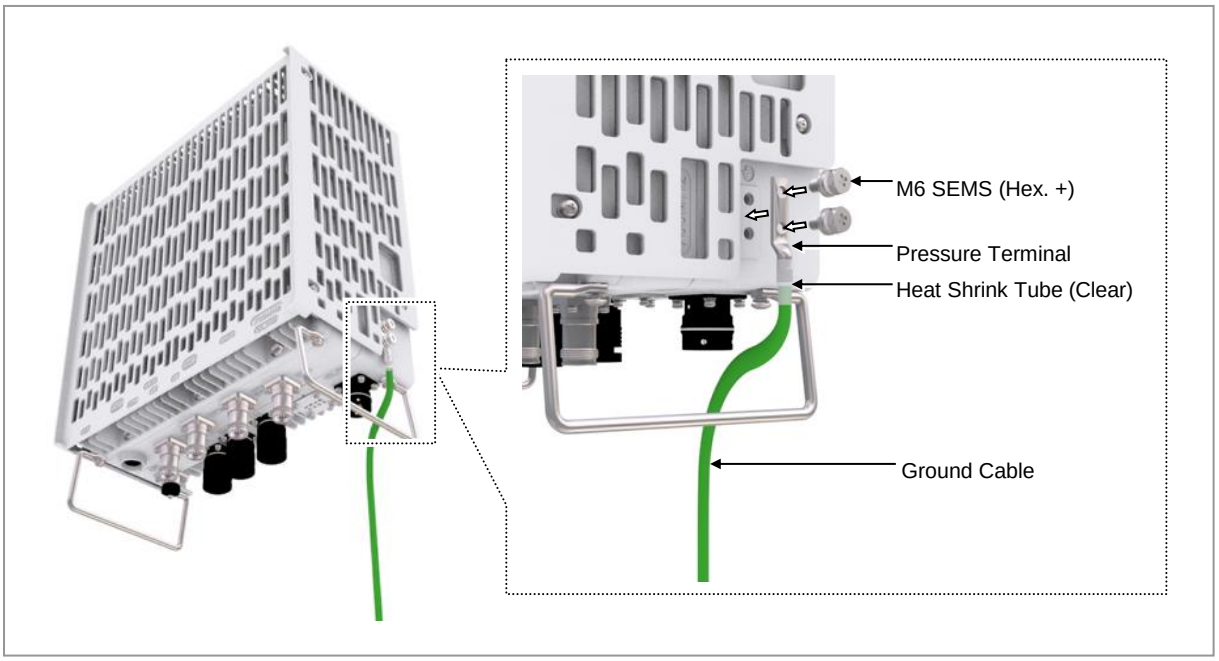

Copyright © 2017, All Rights Reserved.

Power Cabling

The power supply device consists of the following elements:

Figure 52. Power Equipment Elements

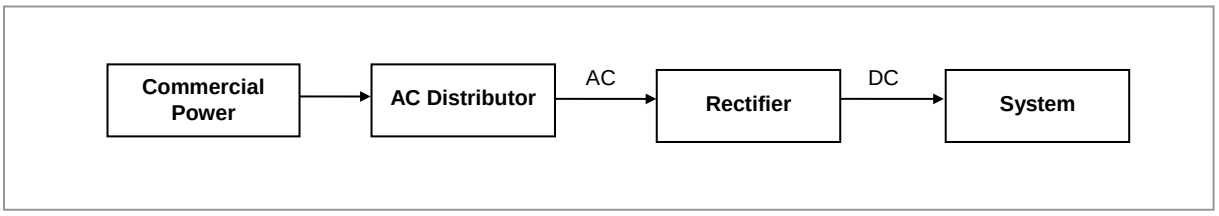

Since power is applied to the system where the power cable is connected by manipulating the circuit breaker of the rectifier, be sure to check the rectifier's breaker is turned off (open) before connecting the power cable to the power connector. If the system is installed while the circuit breaker is on, the worker may be critically injured as soon as the cable is connected in the wrong way.

Handling the power cable incorrectly may damage the rack or cause an electric short-circuit through the cable. Ensure the power switch on the rectifier or the system is turned off before handling the power.

The fasteners for power cable must be tightly secured to prevent electrical accidents.

The heat-resistant temperature of the power cable should be 90°C or more.

Install the power cable to the power port of the system by considering the radius of curvature of its cable specification and then cut the cable. If operator installs the cable after cutting, there may be length difference among the core wires at the end of the cable because of cable curvature. This may result in poor contact after the cable is connected to the power port.

When using the system DC power cable, the length of the power cable can be up to 30 m with AWG 10 specification, and is available up to 40 m with AWG 8 specification. The separation distance is decided only by normal installation. The maximum separation distance may change when conditions changes.

Install a circuit breaker to a rectifier (or power distributor) for the stable power. The capacity of circuit breaker is 20 A or 25 A. (Use UL Listed circuit breakers.)

Copyright © 2017, All Rights Reserved.

Connecting Power Cable

To connect Power cable

1 Make sure you have the following items:

Table 27. Parts and Tools for connecting Power Cable

Category	Description	
Installation Section	Rectifier~RRH Power Input Port	
Cable	AWG 8 or AWG 10 × 2C (The color of the core wire can be changed according to the specification of the cable used.)	
Connector	Rectifier	Check specifications of rectifier output terminal per site and prepare fasteners.
	RRH	JONHON, Push Pull Type, CT48J-1502TSCBM-07 to open
Working Tools	Cable Cutter, Wire Stripper, Compressor, Heating Gun, Nipper	

Table 28. Power Cable/Connector Pin Map

Power Connector Pin No.	Description	Color
Pin 1	-48 V DC	The color of the core wire can be changed according to the specification of the cable used.
Pin 2	RTN	

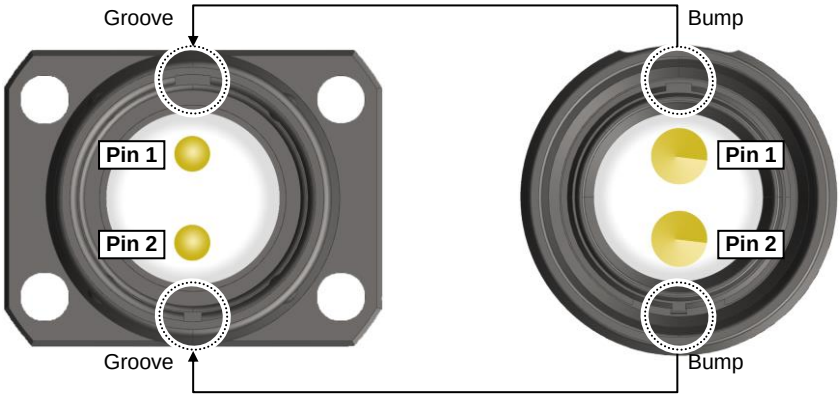

[System side Connector] **[Cable side Connector]**

2 Install a DC power cable from the rectifier to the RRH.

Copyright © 2017, All Rights Reserved.

Figure 53. Connecting Power Cable (1)

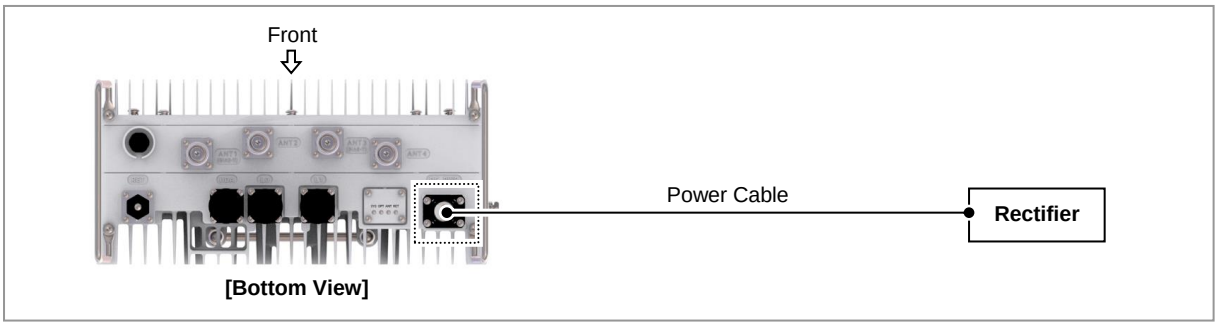

3 Insert the connector aligning the cable side connector's white dot and system side connector's white dot. When inserting the connector, push the shell to upper side.

Figure 54. Connecting Power Cable (2)

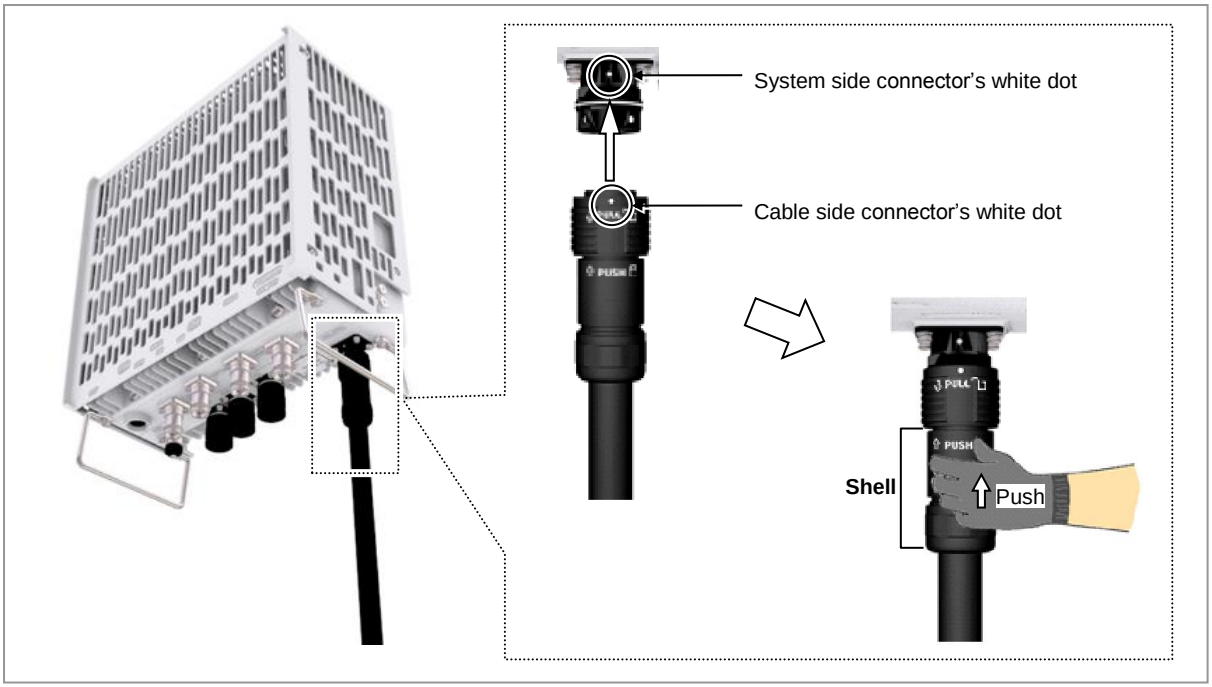

When the connector is fastened tight, the white line on the system side connector should be invisible (or hidden).

Copyright © 2017, All Rights Reserved.

[White Line is invisible] [White Line is visible]

The method for connecting/disconnecting the power connector is as follows:
- For connecting the connector, push the shell to upper side.
- For disconnecting the connector, pull the coupling nut to lower side.

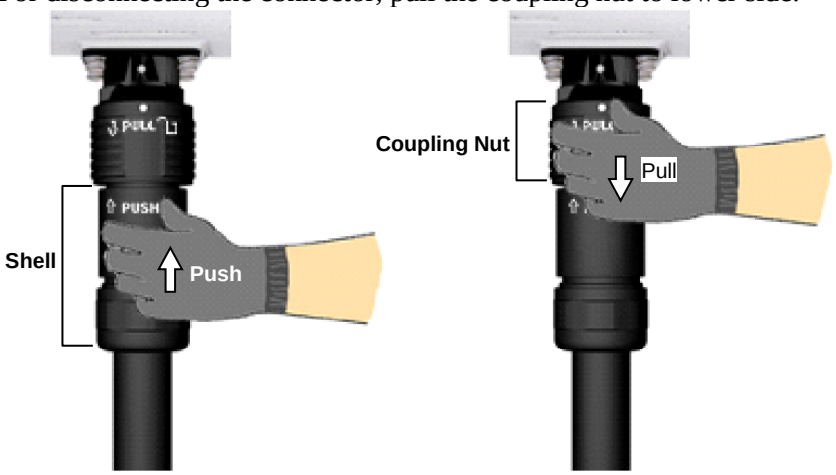

Copyright © 2017, All Rights Reserved.

Interface Cable Connection

Remove/Insert Optical Module

If the optical module needs to be removed or inserted before connecting the cable, follow the below process.

To remove Optical Module

1 Hang the Optic Transceiver Removal Tool's hook on the optical module's bail within the system.

Figure 55. Optical Module Removal (1)

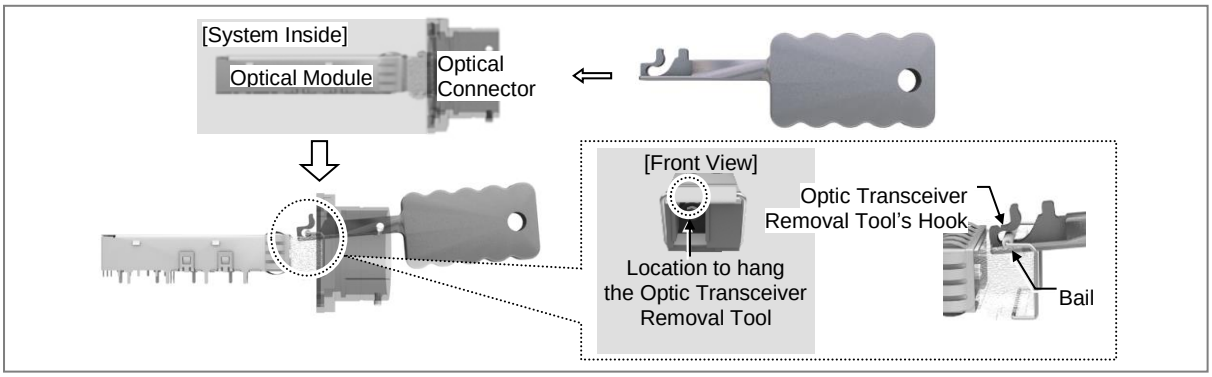

2 Completely remove the optical module from the transceiver by pulling the Optic Transceiver Removal Tool.

Figure 56. Optical Module Removal (2)

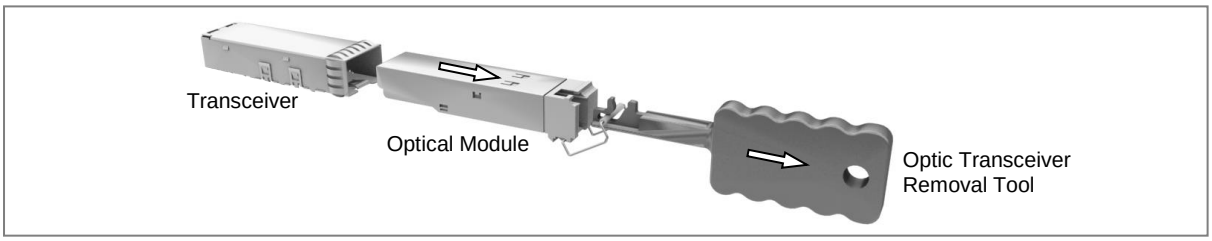

3 Remove the optical module and the jig by pressing the Optic Transceiver Removal Tool's hook grip.

Figure 57. Optical Module Removal (3)

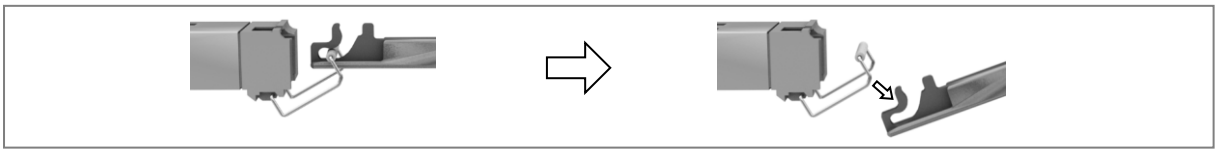

To inset Optical Module

Copyright © 2017, All Rights Reserved.

Push the optical module into the transceiver within the connector.

Figure 58. Optical Module Inset

Inset the optical module's bail, facing the front of the system, to the port.

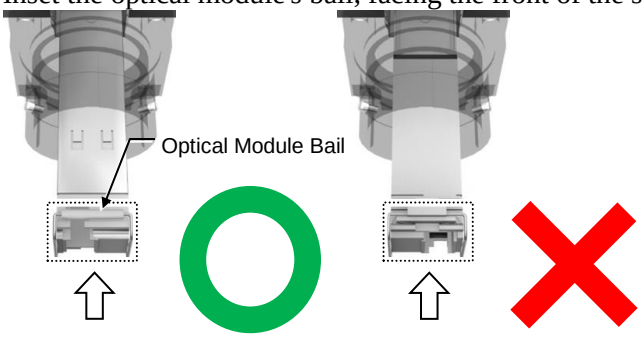

Do not inset when the optic module's bail is unlocked.

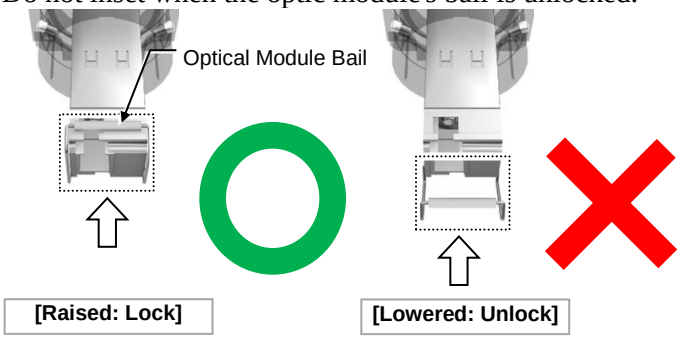

Connecting CPRI Cable

The method for configuring the CPRI cable's cascade is sorted into connection-oriented and end-oriented.

Cascade can be connected up to maximum three systems.

Copyright © 2017, All Rights Reserved.

Figure 59. The method for configuring the CPRI Cable's cascade

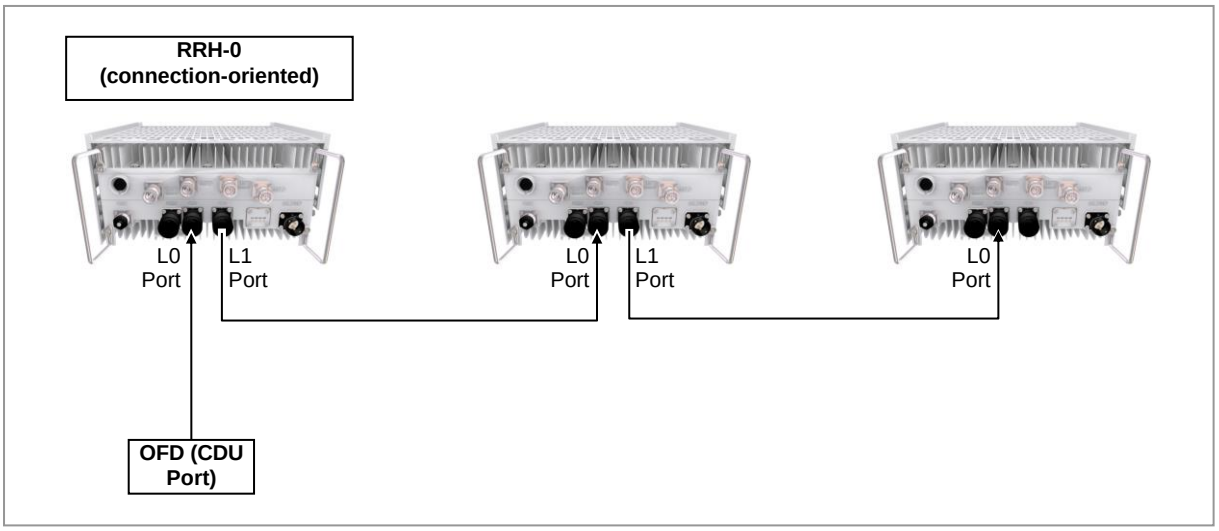

To connect CPRI Cable (Cascade connection-oriented)

1 Make sure you have the following items:

Table 29. Parts and Tools for connecting CPRI Cable_Cascade connection-oriented

Category	Description	
Installation Section	OFD (CDU Port)~RRH-0_L0 Port	
	RRH-1_L0 Port~RRH-0_L1 Port	
Cable	CPRI Cable (Optical, Single Mode, for Outdoor Type)	
Connector	OFD (CDU Port)	DLC/UPC
	RRH_L0, L1 Port	JONHON, Push Pull Type, PDLC03T03 (DLC/UPC)
Working Tools	Optical Connector Cleaner	

In the system, the laser beam light runs through the optical cable.
The exposure of the laser beam on worker's eye may cause serious injury so that it should be handled with care.

Remove the cap of the optical connector before connecting.
- Before connecting the optical cable, check if the ferrule of the connector is soiled.
Be careful to keep the cutting section away from dust or foreign material.
If the cable is soiled with foreign material, do not blow to remove them.
- Make sure to clean the connector in accordance with the cleaning directions in Annex.
- Do not touch the ferrule at the end of optical cable because it is easy to be damaged.

Copyright © 2017, All Rights Reserved.

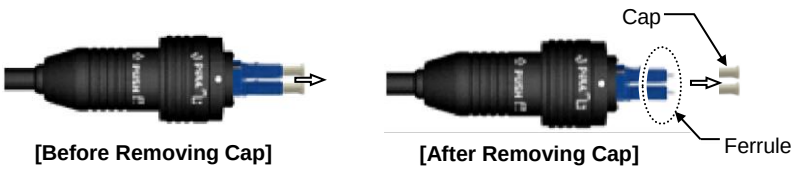

2 Install a CPRI cable from the OFD (CDU port) to the RRH.

Figure 60. Connecting CPRI Cable_Cascade connection-oriented (1)

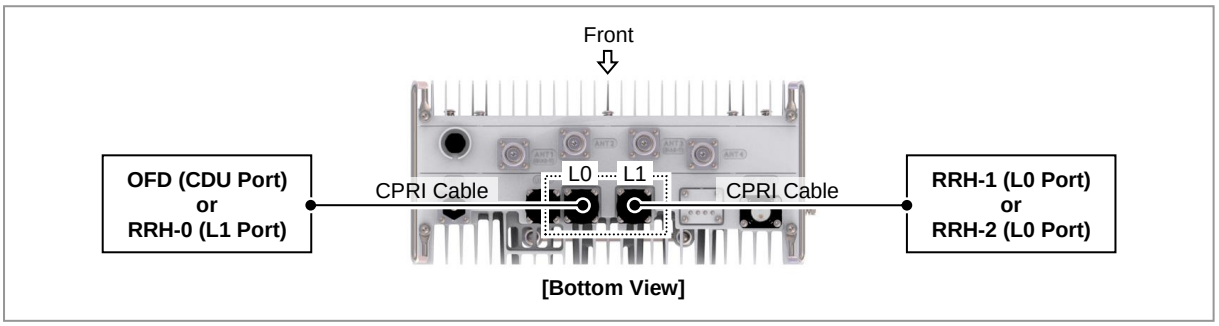

3 Separate the cap from the system side connector (L0, L1 port).

Figure 61. Connecting CPRI Cable_Cascade connection-oriented (2)

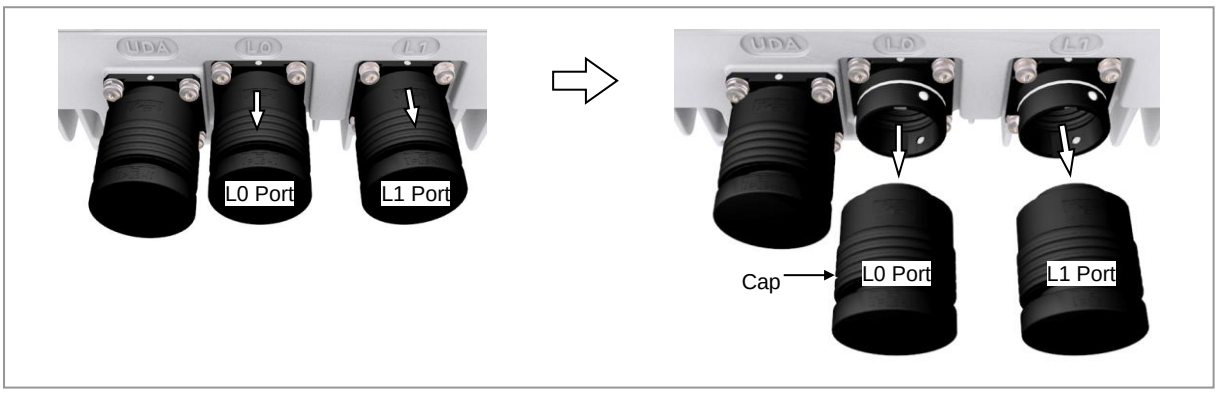

4 Separate the cap from the cable side connector.

Copyright © 2017, All Rights Reserved.

Figure 62. Connecting CPRI Cable_Cascade connection-oriented (3)

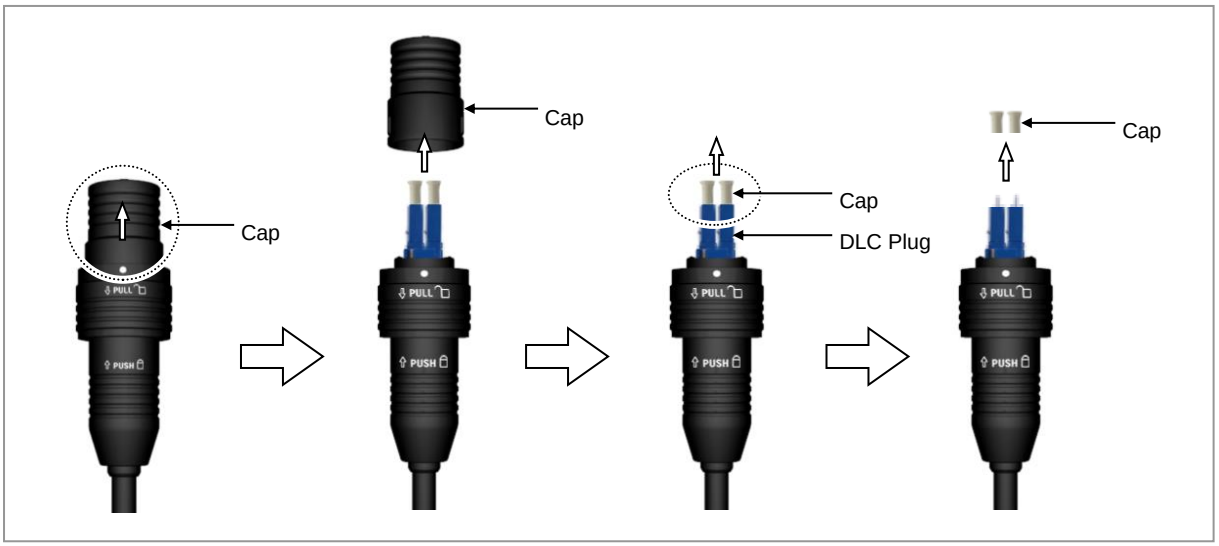

5 The latch of cable side connector should be toward the rear side.

Figure 63. Connecting CPRI Cable_Cascade connection-oriented (4)

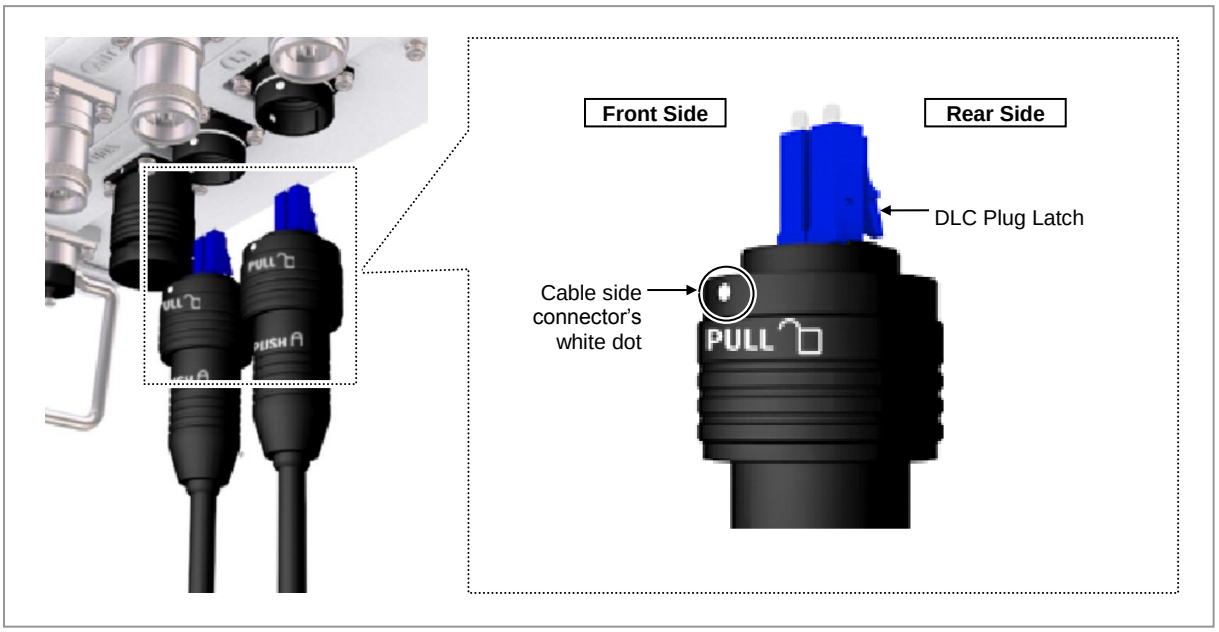

6 Insert the DLC plug to the system side's optic module.

Copyright © 2017, All Rights Reserved.

Figure 64. Connecting CPRI Cable_Cascade connection-oriented (5)

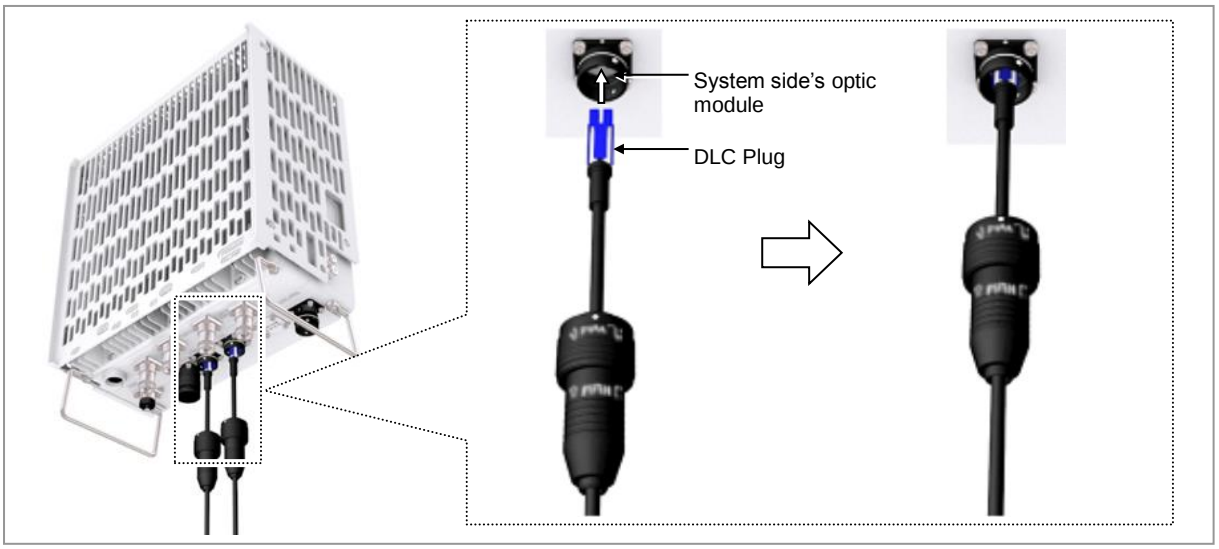

7 Insert the connector aligning the cable side connector's white dot and system side connector's white dot. When inserting the connector, push the shell to upper side.

Figure 65. Connecting CPRI Cable_Cascade connection-oriented (6)

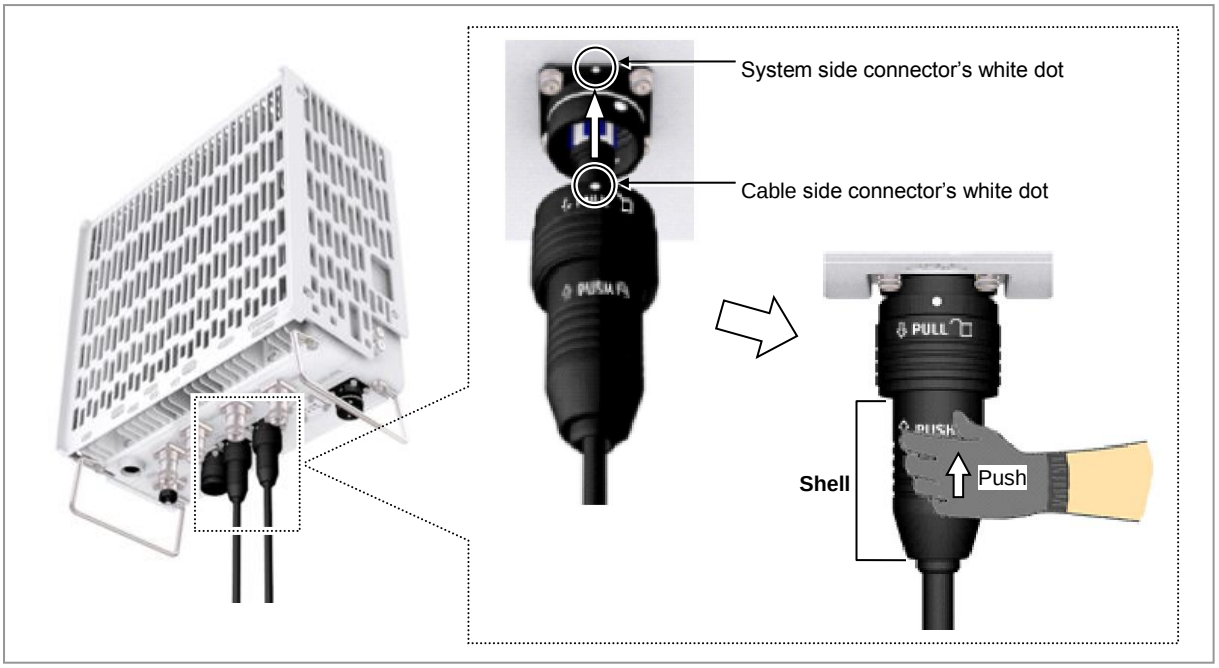

When the connector is fastened tight, the white line on the system side connector should be invisible (or hidden).

Copyright © 2017, All Rights Reserved.

[White Line is invisible] **[White Line is visible]**

The method for connecting/disconnecting the CPRI (optical) connector is as follows:
- For connecting the connector, push the shell to upper side.
- For disconnecting the connector, pull the coupling nut to lower side.

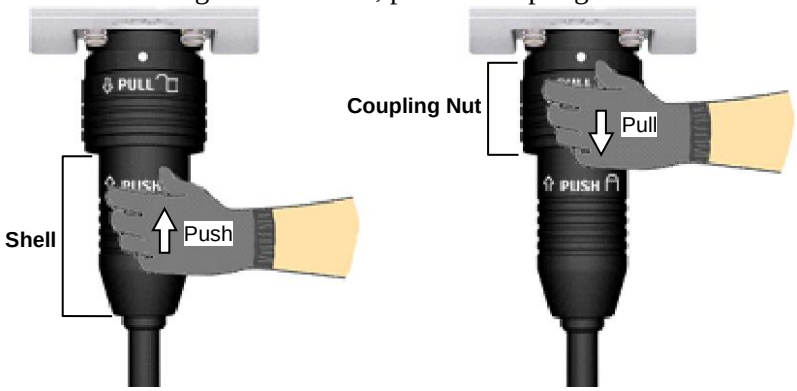

To connect CPRI cable (Cascade end-oriented)

1 Make sure you have the following items:

Table 30. Parts and Tools for connecting CPRI Cable_Cascade end-oriented

Category	Description	
Installation Section	RRH-1 L1 Port~RRH-2 L0 Port	
Cable	CPRI Cable (Optical, Single Mode, for Outdoor Type)	
Connector	RRH	JONHON, Push Pull Type, PDLC03T03 (DLC/UPC)
Working Tools	Optical Connector Cleaner	

In the system, the laser beam light runs through the optical cable.
The exposure of the laser beam on worker's eye may cause serious injury so that it should be handled with care.

Copyright © 2017, All Rights Reserved.

Remove the cap of the optical connector before connecting.
- Before connecting the optical cable, check if the ferrule of the connector is soiled. Be careful to keep the cutting section away from dust or foreign material. If the cable is soiled with foreign material, do not blow to remove them.
- Make sure to clean the connector in accordance with the cleaning directions in Annex.
- Do not touch the ferrule at the end of optical cable because it is easy to be damaged.

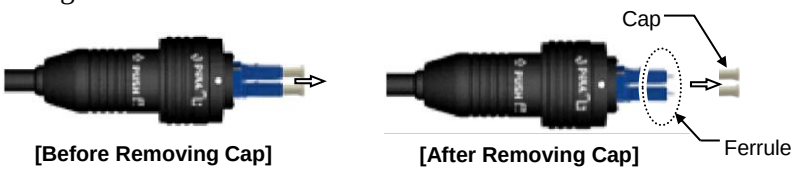

Because L1 port is not used in Cascade end-oriented, assemble the cap at the L1 port to prevent foreign substances and do not remove the cap discretionally.

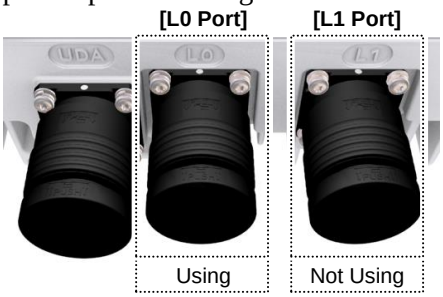

2 Install a CPRI cable from the RRH-1 (L1 port) to the RRH-2 (L0 port).

Figure 66. Connecting CPRI Cable_Cascade end-oriented (1)

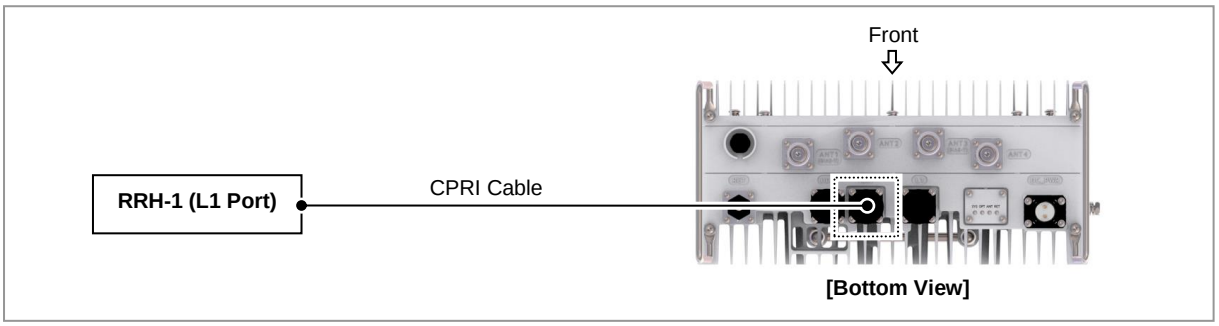

3 Because the method for connecting the cascade end-oriented CPRI cable is identical to connection-oriented, refer to the how to connect it.

Copyright © 2017, All Rights Reserved.

Figure 67. Connecting CPRI Cable_Cascade end-oriented (2)

Connecting UDA Cable

To connect UDA cable

1 Make sure you have the following items:

Table 31. Parts and Tools for connecting UDA Cable

Category	Description	
Installation Section	External Device~RRH UDA Port	
Cable	UDA Cable Assembly (AWG24, 8C, CAT5e, SFTP)	
Connector	External Device	Check specifications of external device output terminal per site and prepare fasteners.
	RRH	JONHON, Push Pull Type, RJ45MF-CT-07
Working Tool	Cable Cutter, Wire Stripper, Nipper, LAN Tool	

Table 32. UDA Cable Pin Map

System Side	Color Map	Rectifier Side	Description
1	White/Orange	1	UDA3_RTN
2	Orange	2	UDA3
3	White/Green	3	UDA2_RTN
4	Blue	4	UDA2
5	White/Blue	5	UDA1_RTN
6	Green	6	UDA1
7	White/Brown	7	UDA0_RTN

Copyright © 2017, All Rights Reserved.

System Side	Color Map	Rectifier Side	Description
8	Brown	8	UDA0

2 Install a UDA cable from the External Device to the RRH.

Figure 68. Connecting UDA Cable (1)

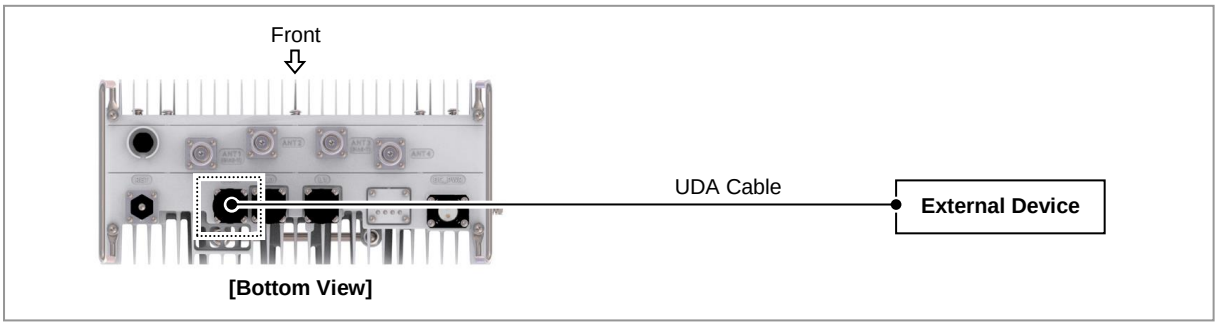

3 Separate the cap from the system side connector (UDA port).

Figure 69. Connecting UDA Cable (2)

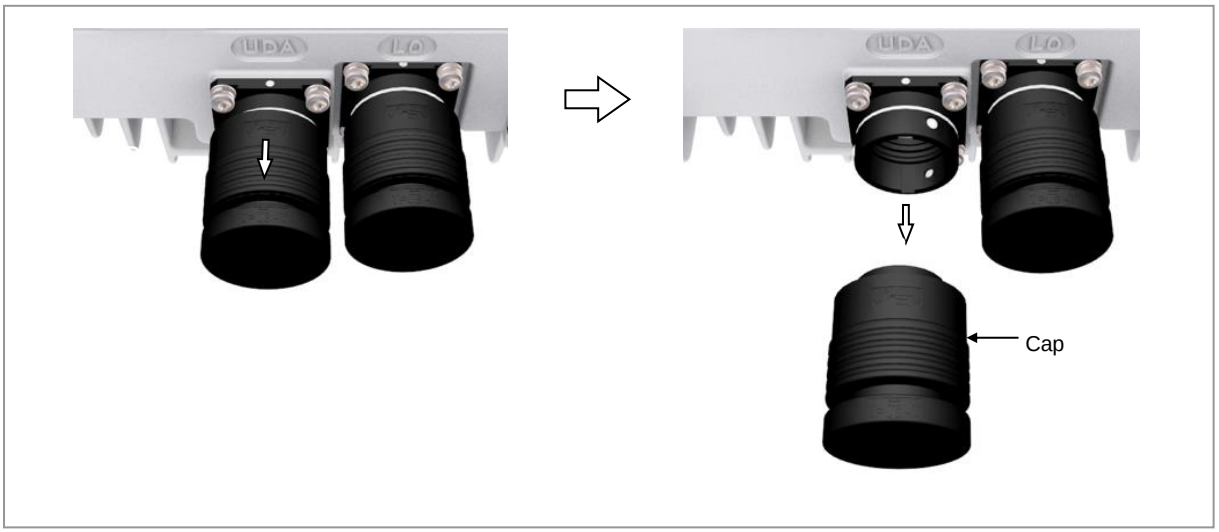

4 Separate the cap from the cable side connector.

Copyright © 2017, All Rights Reserved.

Figure 70. Connecting UDA Cable (3)

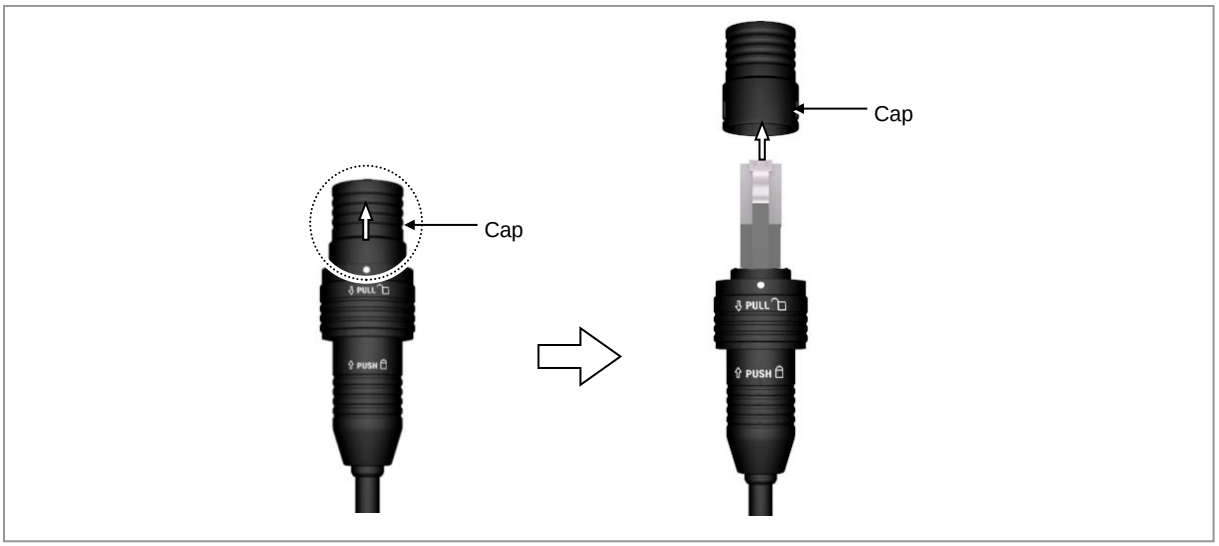

5 The latch of cable side connector should be toward the front of the system.

Figure 71. Connecting UDA Cable (4)

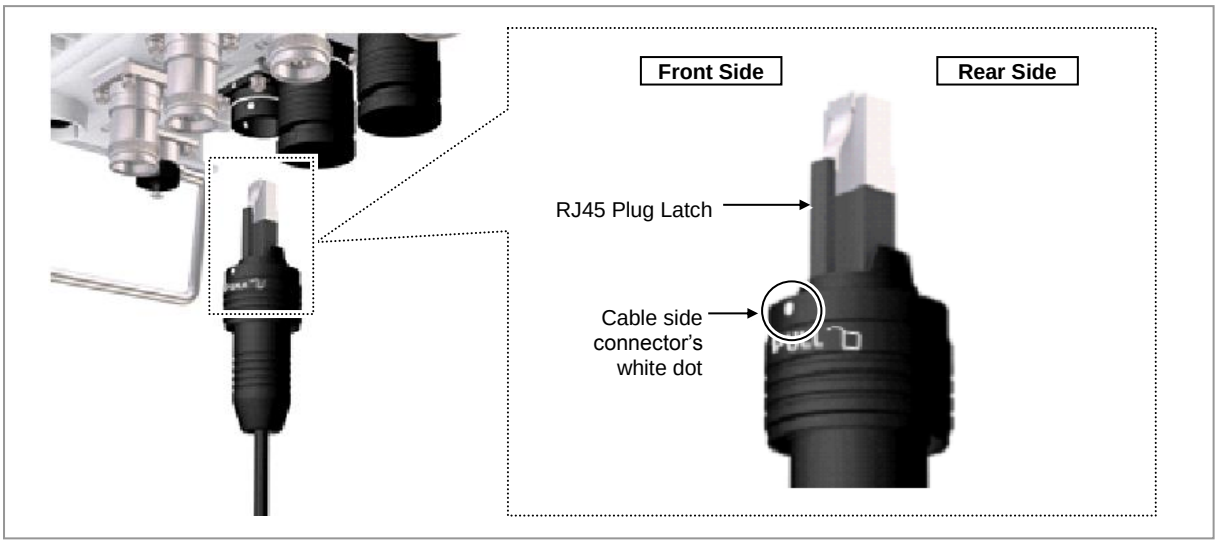

6 Insert the RJ-45 plug to the system side connector.

Copyright © 2017, All Rights Reserved.

Figure 72. Connecting UDA Cable (5)

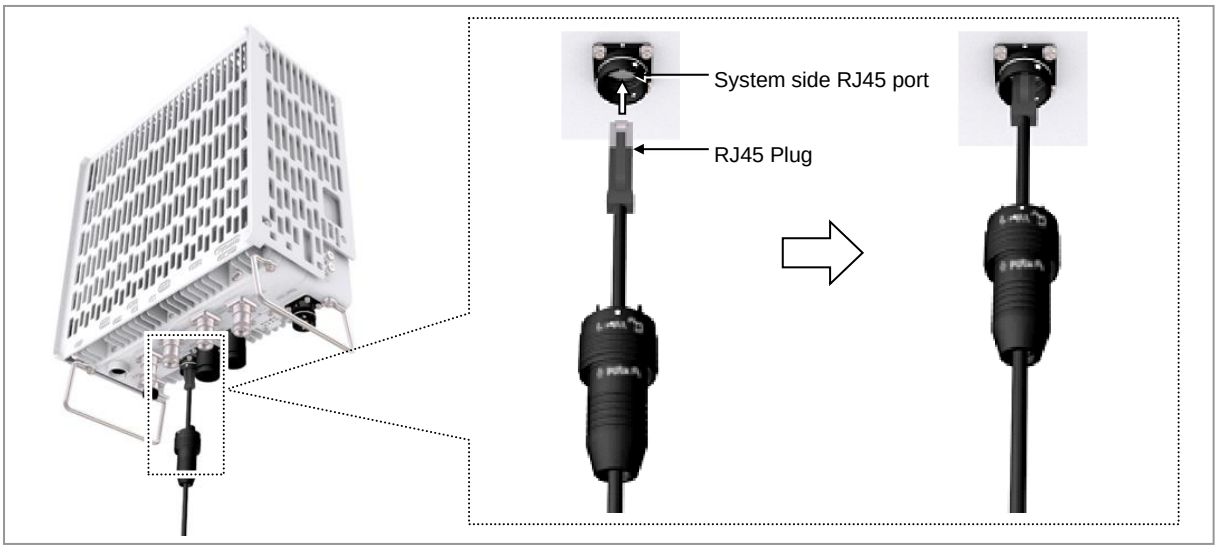

7 Insert the connector aligning the cable side connector's white dot and system side connector's white dot. When inserting the connector, push the shell to upper side.

Figure 73. Connecting UDA Cable (6)

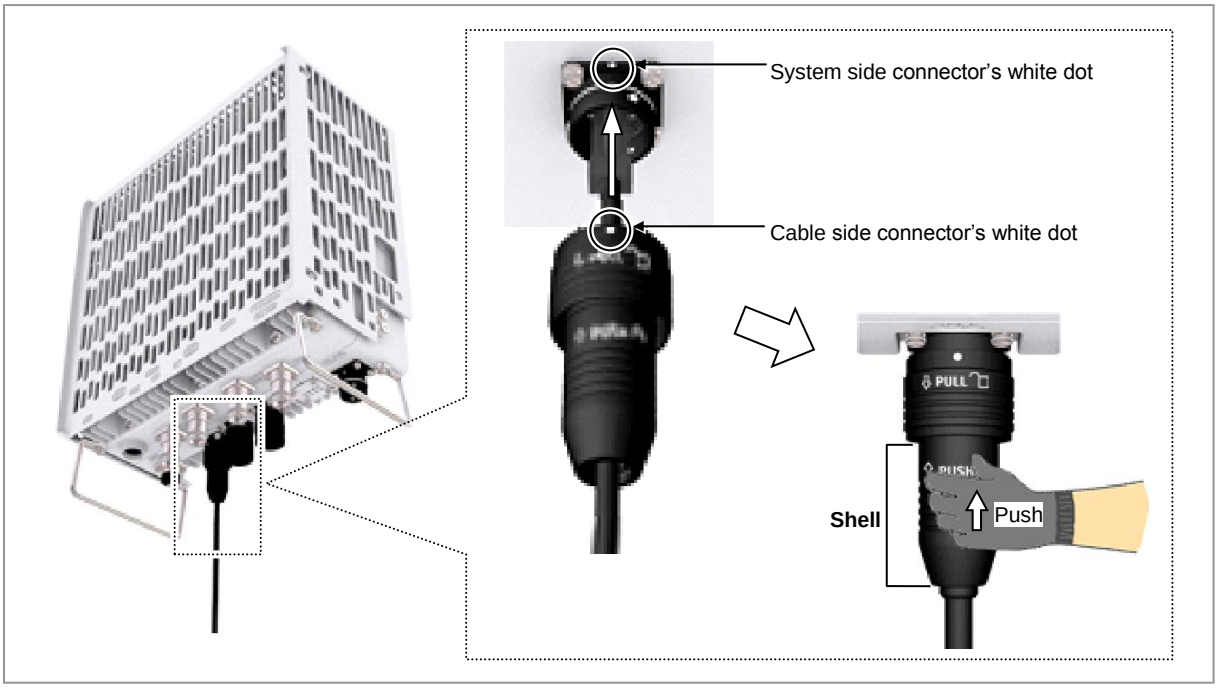

When the connector is fastened tight, the white line on the system side connector should be invisible (or hidden).

Copyright © 2017, All Rights Reserved.

[White Line is invisible] **[White Line is visible]**

The method for connecting/disconnecting the UDA (RJ45) connector is as follows:
- For connecting the connector, push the shell to upper side.
- For disconnecting the connector, pull the coupling nut to lower side.

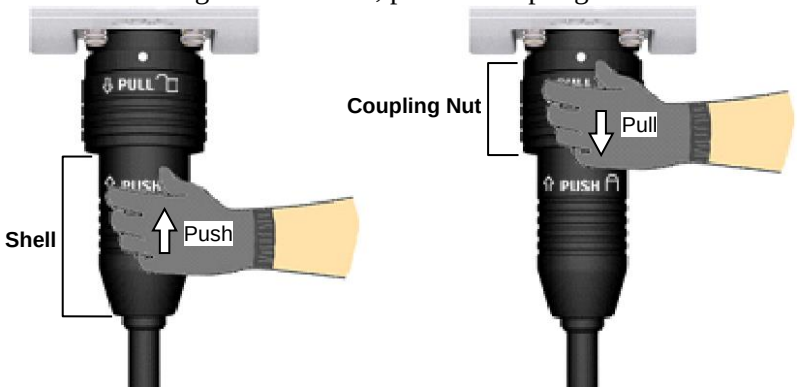

Connecting RET Cable

To connect RET cable

1 Make sure you have the following items:

Table 33. Parts for connecting RET Cable

Category	Description	
Installation Section	RF Antenna~RRH RET port	
Cable	RET Cable Assembly	
Connector	RF Antenna	Check the RF antenna (RETu) RET connector specification per site
	RRH	AISG 2.~~0~~2

Copyright © 2017, All Rights Reserved.

Table 34. RET Cable Pin Map

Pin No	Description	Cable Color
1	N/C (Not Connected)	-
2	N/C (Not Connected)	-
3	RS485 B	White
4	GND	Blue
5	RS485 A	Brown
6	+24 V DC	Red
7	DC Return	Black
8	N/C (Not Connected)	-

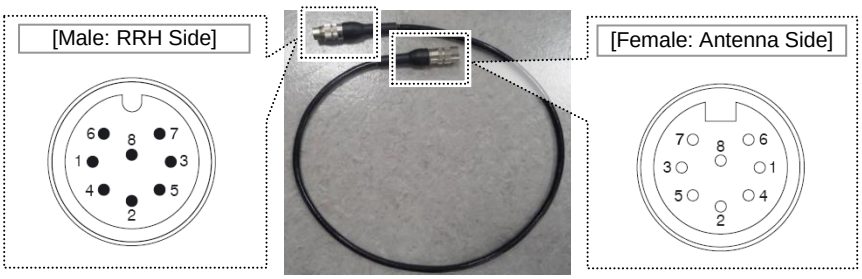

Before fitting the RET connector, make sure to align the female connector's hole with the male connector's pin first.

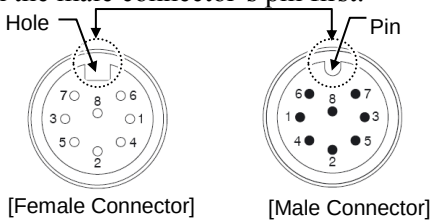

2 Install an RET cable from the RF Antenna to the RRH RET port.

Figure 74. Connecting RET Cable (1)

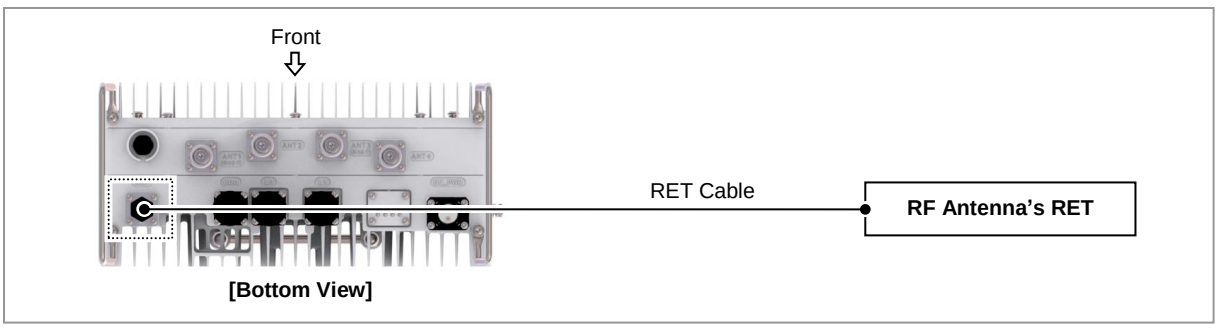

3 Separate the cap from the system side connector (RET port).

Copyright © 2017, All Rights Reserved.

Figure 75. Connecting RET Cable (2)

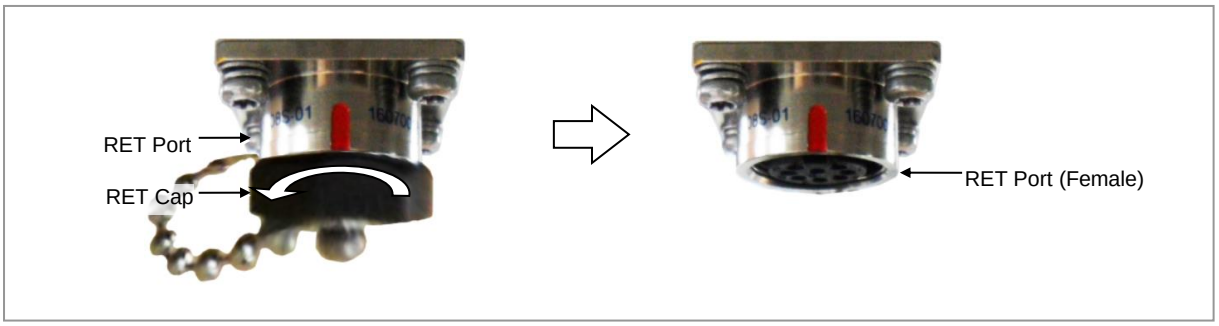

4 Connect the cable side RET connector to the system side RRH RET port.

Figure 76. Connecting RET Cable (3)

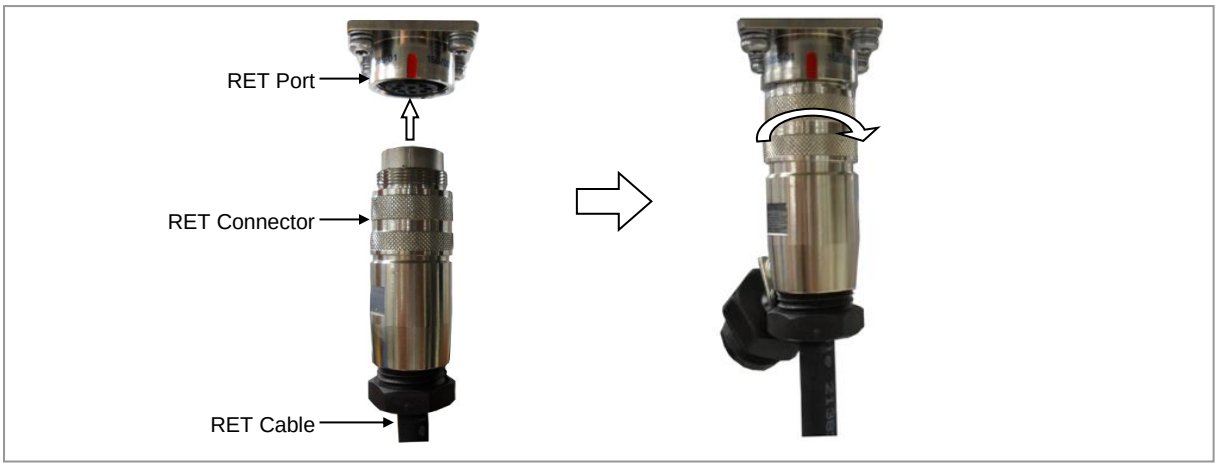

5 Tie the system side RET cap to the RET connector with a waxed string.

Copyright © 2017, All Rights Reserved.

Figure 77. Connecting RET Cable (4)

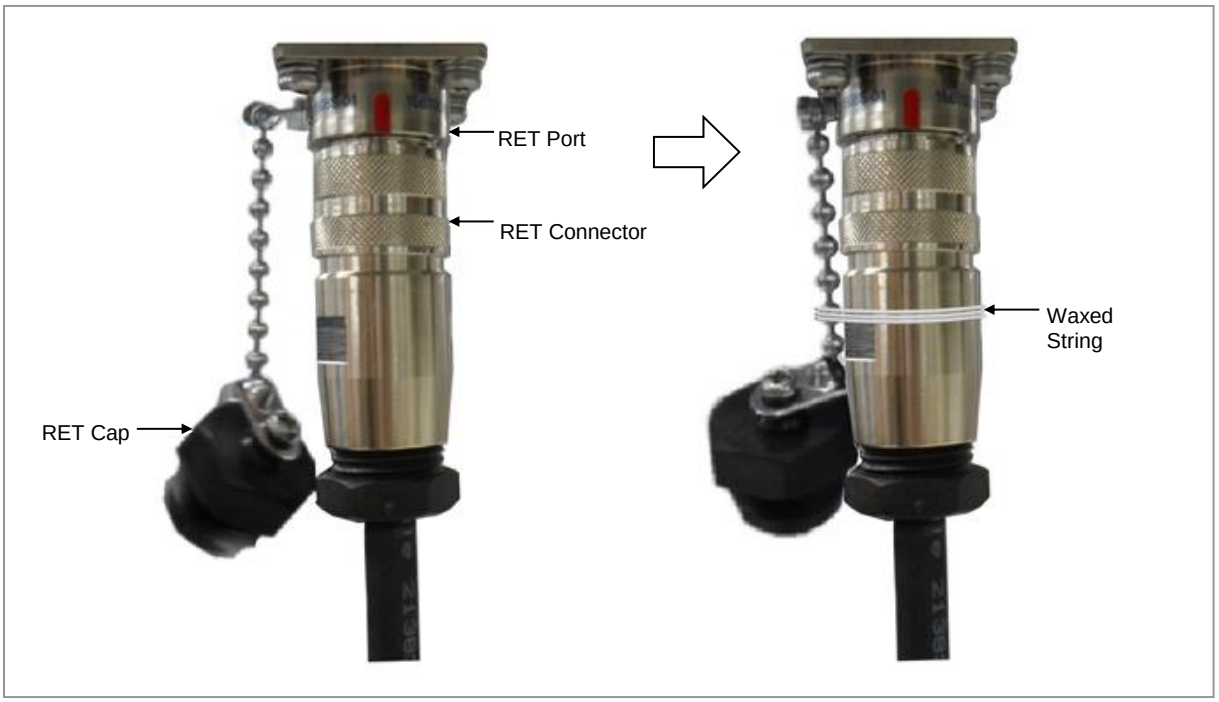

Connecting Cable

The RF cable minimum radius of curvature must be observed.

Table 35. RF Cable Minimum Radius of Curvature

Category	Description		
RF cable min. radius of curvature	1/2 in. Feeder Line	Super Flexible Type	1.26 in. (32 mm)
		Flexible Type	4.92 in. (125 mm)

To connect RF cable

1 Make sure you have the following items:

Table 36. Parts and Tools for connecting RF cable

Category	Description	
Installation Section	RF Antenna~RRH ANT1, ANT2, ANT3, ANT4	
Cable	RF Cable Assembly (1/2 in. Feeder Line)	
Connector	RF antenna	DIN Type-Male (Check the RF antenna specification and prepare connecting parts.)
	RRH	4.3-10 Plus Type-Male
Recommended Torque Value	RF antenna	217 lbf·in (250 kgf·cm)
	RRH	44 lbf·in (51 kgf·cm)

Copyright © 2017, All Rights Reserved.

Category	Description	
Working Tools	RF antenna	Torque Wrench (100~400 lbf·in), Torque Wrench Spanner head (apply Hex. Head: 32 mm), Spanner (32 mm)
	RRH	Torque Wrench (10~50 lbf·in), Torque Wrench Spanner head (apply Hex. Head: 22 mm), Spanner (22 mm)

When operator installs the antenna, the antenna must be within the protective angle (left/right side 45° each from the central axis) to prevent the antenna from lightning damage.

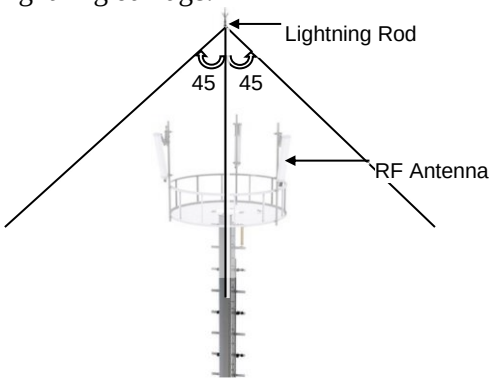

2 Install RF cable from the RRH to the RF antenna.

Figure 78. Connecting RF Cable (1)

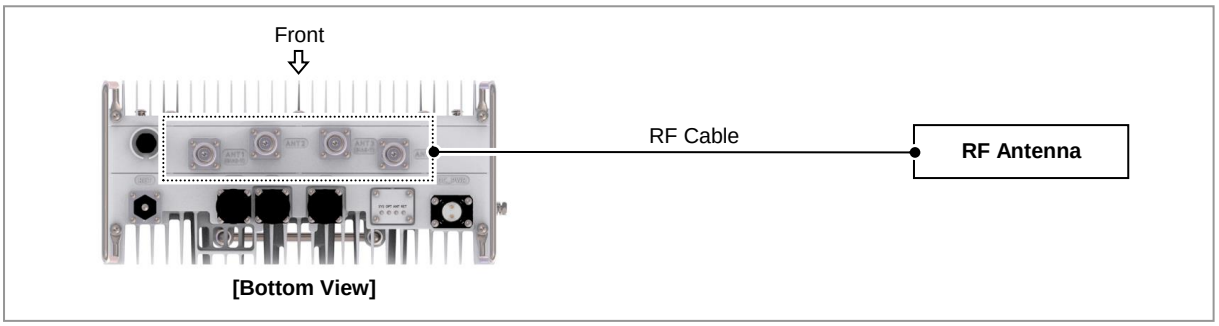

3 Connect cables to the RF antenna ports.

Copyright © 2017, All Rights Reserved.

Figure 79. Connecting RF Cable (2)

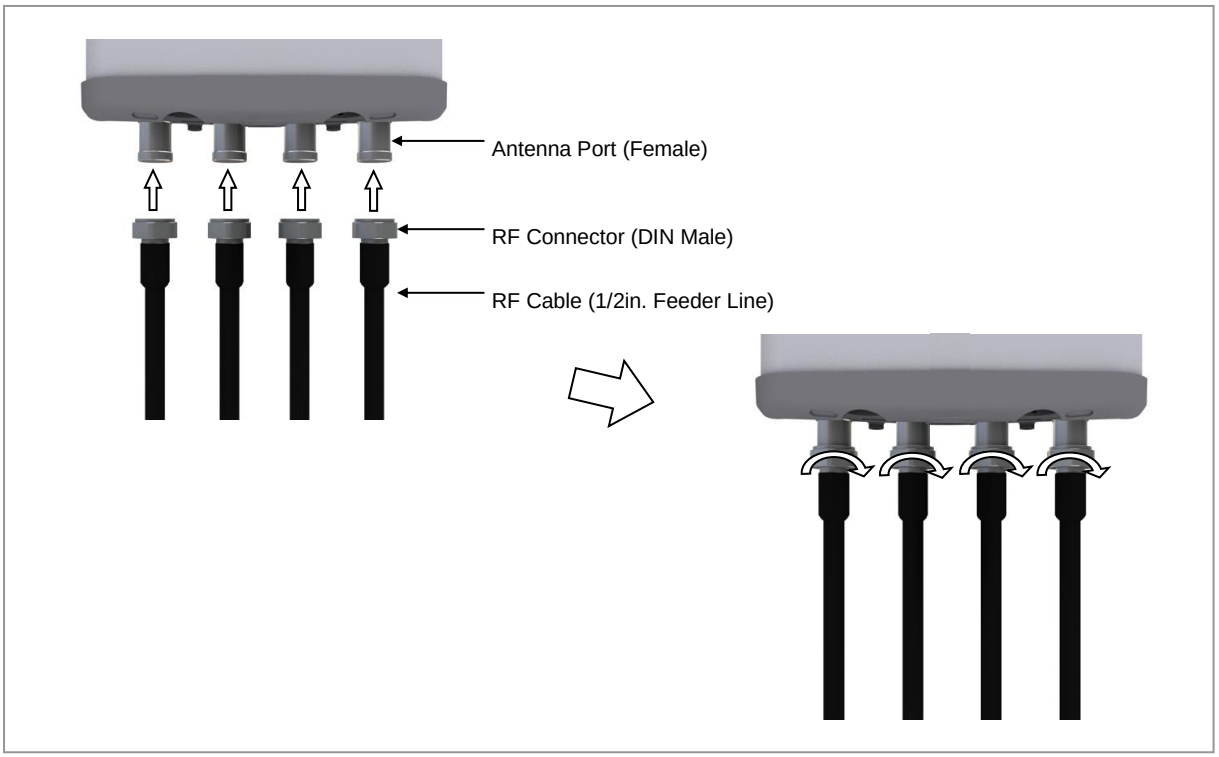

As different connector types may be used depending on the RF antenna type, check the antenna connector before connecting the cable.

4 Connect cables to the system side RF port (ANT1, ANT2, ANT3, ANT4).

5 Install the properly weatherproofing solution.

Copyright © 2017, All Rights Reserved.

Figure 80. Connecting RF Cable (3)

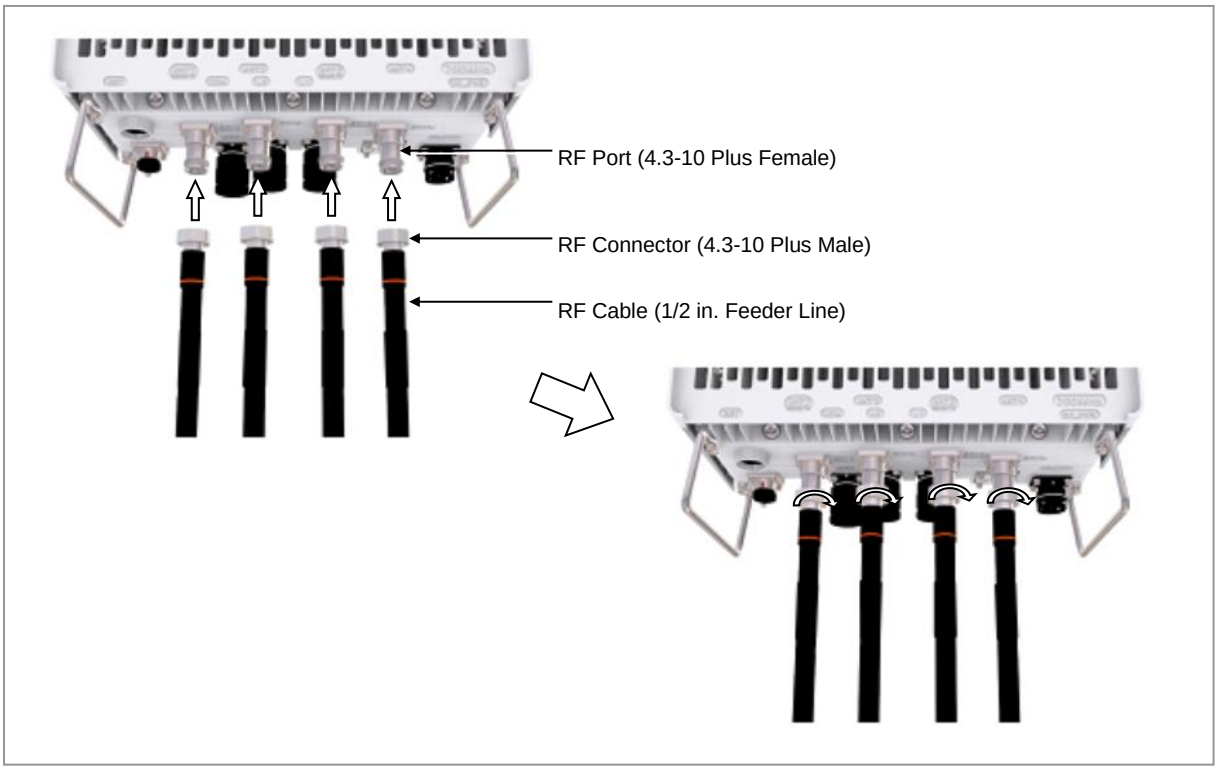

Checking RF Cable Connection

After connecting the RF cables, perform the continuity test and feeder cable return loss to check if the RF cable is changed and measure VSWR of antenna and RF cable.

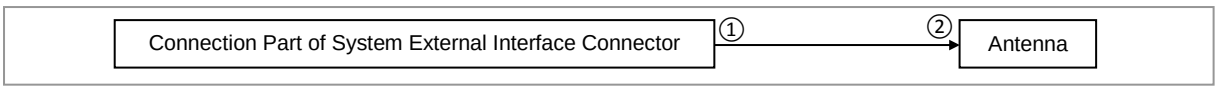

Measure all cables of section ①~②. The measured VSWR should be the specification value or less. If the VSWR exceeds the specification value, disassemble the connector and measure each section separately.

If the VSWR value for minimum cable bend radius and length of RF cable is not applied, system may not work properly because RF signals cannot transmit or receive smoothly. So, the VSWR value for minimum cable bend radius and length of RF cable must be checked and applied.

When measuring VSWR, if operator opens the antenna port when the transmission output is not completely off, a spike signal may flow into the reception path, which may cause damage to LNA. Make sure the transmission output is completely off when measuring VSWR.

When RF cable connection integrated RET signal and DC power is applied using ANT1 port of RRH, RET cable should be installed separated from RF cable to RF

Copyright © 2017, All Rights Reserved.

Antenna.

Depending on the supplier or manufacturer of antenna/arrestor the connector type may be different. Also, the detail specifications of a connector may be different depending on cable type even for the same connector type. Therefore, check the detail specifications of a connector before preparing parts.
Ex) DIN Type-Male: for 1/2 in. Feeder line, for 7/8 in. Feeder Line

RF Cable Identification Tag Installation

Attach the identification tape in the below table to the RF cable.

Table 37. RF Cable Identification Tag

Category	Description
Installation position	Attach the identification tag to the both ends of the antenna.
Materials	Use the material of aluminum coated by vinyl for the identification tag.
Fixing method	• Antenna side: Attach the tag to the feeder line using binding strings through the two holes on the tag. • Equipment Side: Cover up the feeder line with the tag and fix it using binding strings through the two holes on the tag.
Identification method	The markings must be prevented from being erased by using relief engraving or coated labels.

Copyright © 2017, All Rights Reserved.

Chapter 4 Inspect the Installation

The procedure to check the installation status is as follows:

Figure 81. Installation Inspection Procedure

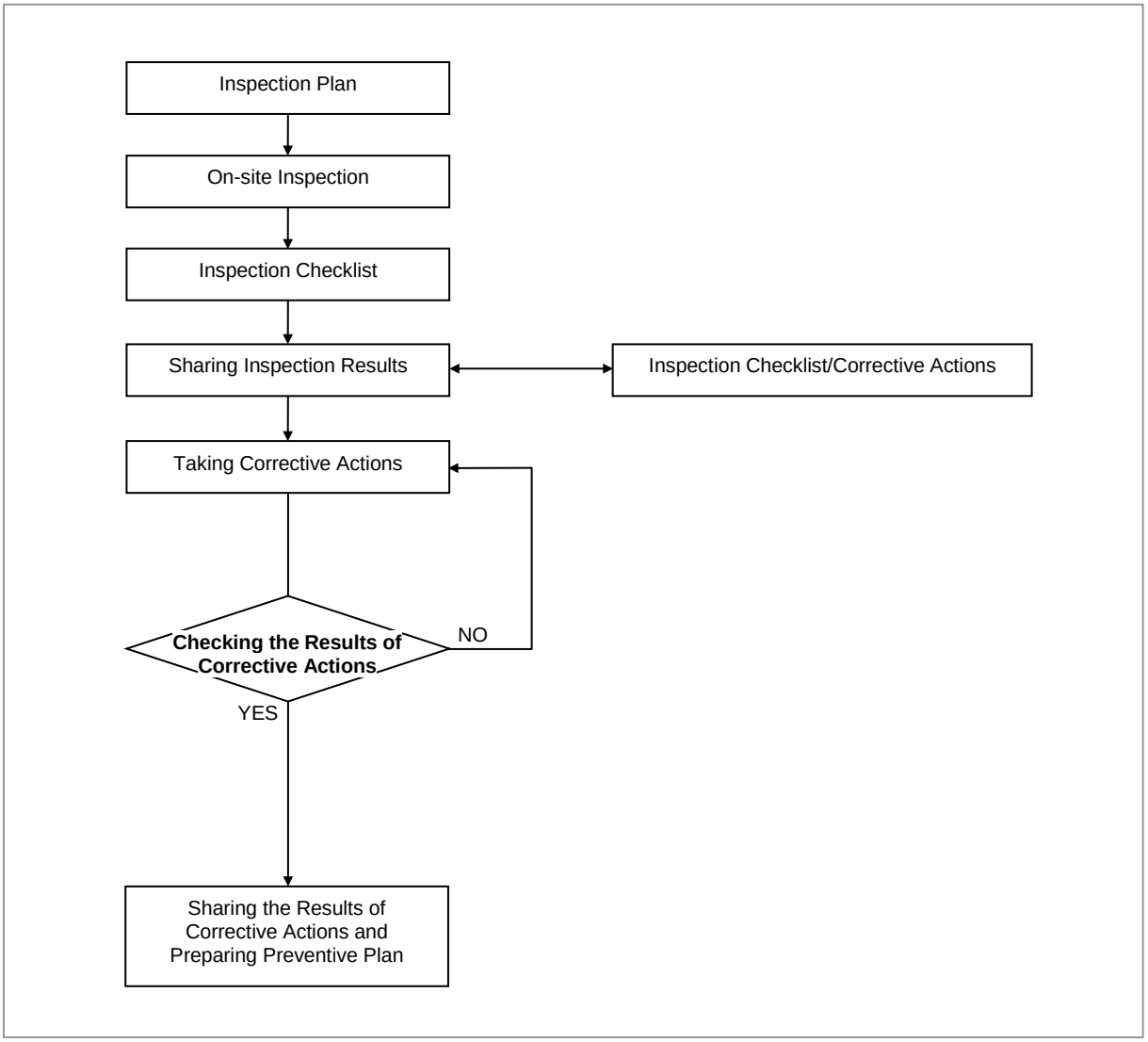

Inspection Plan

Create an inspection sheet per system and select an inspector to set an inspection schedule per site.

On-site Inspection and Inspection Checklist

The on-site inspection is to perform inspection visually or using instruments for

Copyright © 2017, All Rights Reserved.

each specification, standard, and installation status, and so on based on the inspection checklist actually at a site where the system is installed.

The inspector must record the results onto the inspection checklist during or after filed inspection.

Sharing Inspection Results and Taking Corrective Actions

The inspector must share the inspection results (inspection checklist/corrective actions) with an installation operator and, the installation operator must take the corrective actions if necessary after reviewing the requirements.

Checking the Results of Corrective Actions

The inspector must check if the corrective actions are properly taken. If they are not sufficient, the inspector must ask the installation operator to take the corrective actions again.

Sharing the Results of Corrective Actions and Preparing Preventive Plan

After the corrective actions are all completed, the inspector must share the results with the installation operator and relevant departments and prepare a preventive plan to prevent the same or similar problems from re-occurring.

Construction Situation Checklist

Table 38. Construction Situation Check list

Category	Check Items	Criteria	Result	
			Pass	Fail
Installing Equipment	Appearance of equipment and mechanical parts	Equipment damage such as Dent, scratch and crack, and so on		
	Placement of equipment and mechanical parts	Maintenance and horizontal/vertical placement		
	Leveling condition of equipment and mechanical parts	Horizontal/vertical status		
	Validity of status and specifications of fastening bolt/nut/washer, and so on	Checking fasteners omission		
		Compliance with assembly order of fasteners		
		Compliance with fastening torque value		
	Insulation status	Checking electrical contact between insulators (insulation resistance tester)		
Grounding	Installation of ground bar	Checking the separation of communication/power/lightning grounding		
	Cable specification	Checking the specification		
	Cabling	Cable damage		
		Proper installation route		

Copyright © 2017, All Rights Reserved.

Category	Check Items	Criteria	Result	
			Pass	Fail
		Compliance with the radius of curvature		
	Cable binding status	Binding status		
		Binding interval		
		Checking binding materials		
	Cable connection	Assembly condition of a pressure terminal		
		Fastening condition of a pressure terminal		
		Checking compliance with fastening torque value		
	Installation status of cable tag	Position		
		Marking content		
		Checking tag installation method		
Power	Installation status of power supply	Power supply capacity		
		Output voltage (tester)		
	Installation of circuit breaker	Checking circuit breaker capacity		
	Cable specification	Checking the specification		
		Checking the limit distance		
	Cabling	Cable damage		
		Proper installation route		
		Compliance with the radius of curvature		
	Cable binding status	Binding status		
		Binding interval		
		Checking binding materials		
	Cable connection	Checking cable connection (Pin Map)		
		Input voltage		
		Assembly condition of a pressure terminal and connector		
		Fastening condition of a pressure terminal and connector		
		Checking compliance with fastening torque value		
	Installation status of cable tag	Position		
		Marking content		
		Checking tag installation method		
Other data cables	Cable specification	Checking the specification		
	Cabling	Cable damage		
		Proper installation route		
		Compliance with the radius of curvature		
	Cable binding status	Binding status		

Copyright © 2017, All Rights Reserved.

Category	Check Items	Criteria	Result	
			Pass	Fail
		Binding interval		
		Checking binding materials		
	Cable connection	Checking cable connection (Pin Map)		
		Assembly condition of a connector		
		Fastening condition of a connector		
		Checking compliance with fastening torque value		
	Installation status of cable tag	Position		
		Marking content		
		Checking tag installation method		
RF	Antenna installation status	Checking specifications		
		Checking installation position		
		Checking fixing status		
		Checking gap between antennas		
	Cable specification	Checking the specification		
	Installation status of arrestor	Checking the specification		
		Checking installation position		
		Checking fixing status		
	Cabling	Cable damage		
		Proper installation route		
		Compliance with the radius of curvature		
	Cable binding status	Binding status		
		Binding interval		
		Checking binding materials		
	Cable connection	Compliance with connector finishing		
	Installation status of cable tag	Position		
		Marking content		
		Checking tag installation method		
		Checking compliance with fastening torque value		
		Compliance with connector finishing		
	Installation status of cable tag	Position		
		Marking content		
		Checking tag installation method		
Others	Reserved ports	Checking port cap fastening status • Indoor: Dust cap • Outdoor: Water proof cap		
	Cable inlet status/Connection of equipment I/O port	Checking fastening status (Conduit/Cable Gland)		

Copyright © 2017, All Rights Reserved.

Category	Check Items	Criteria	Result	
			Pass	Fail
	Cable tray and duct	Checking installation status		
	Status of inside/outside of the equipment and system surrounding area	Checking the stocking condition (waste parts, waste materials, packing materials, and so on)		
Opinion				

Copyright © 2017, All Rights Reserved.

Appendix A Acronyms

AC	Alternating Current
CDU	Cabinet Digital Unit
CPRI	Common Public Radio Interface
DC	Direct Current
DL	Down-Link
eNB	Evolved UTRAN Node-B
FTP	Foiled Twisted Pair
LTE	Long Term Evolution
MGB	Main Ground Bar
RET	Remote Electrical Tilting
RF	Radio Frequency
RTN	Return
SEMS	pre-asSEMbled washers and screws
UDA	User Defined Alarm
UL	Up-Link
VSWR	Voltage Standing Waveform Ratio

Copyright © 2017, All Rights Reserved.

Appendix B Sector Antenna Installation

Cautions when Installing a Sector Antenna

Precautions of antenna installation are as follows.

- Sector antennas should be installed vertically. (±1°)
- Antenna is the precise material, so be careful not to make damage or form change.
- When moving antenna, use the tool suitable to rating. In addition, use the rated carrying device which is at least 200 % or more than antenna considering the stability.
- Be careful not to give too much strength to the antenna.
- If it rains, suspend connecting the feeder cable and antenna.
- Fix it after adjusting the direction of antenna exactly.
- Distance between steel tower and antenna and the distance between send-receive antennas are based on the antenna layout.
- Attach the antenna on the position specified in the drawing.
- Install the antenna not to make a feature change of the antenna considering the direction of the radiation
- Connect the antenna not making the alien substance flowed so that Passive Inter-Modulation Distortion (PMID) is not affected.
- Measure VSWR of all antennas and the value should be within the regulated value.

When you install the antenna, the antenna must be within the protective angle (left/right side 45° each from the central axis) to prevent the antenna from lightning damage.

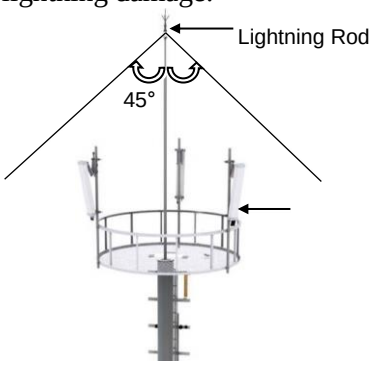

Copyright © 2017, All Rights Reserved.

Sector Antenna Installation

The method of sector antenna installation is as follows.

1. Put up an antenna pole and insert the sector antenna into the antenna pole using a fixing clamp.
2. Set the antenna's up/down tilt to 0° and fix the fixing clamps at the top and bottom.
3. Adjust the tilted angle of the antenna by taking the signal strength into account.
4. The bolts on the upper and lower guide clamps must be loose as to allow angle adjustment of the antenna.
5. After adjusting the antenna angle, tighten up the 4 loose bolts on the upper and lower guide clamps.

Figure 82. Sector Antenna

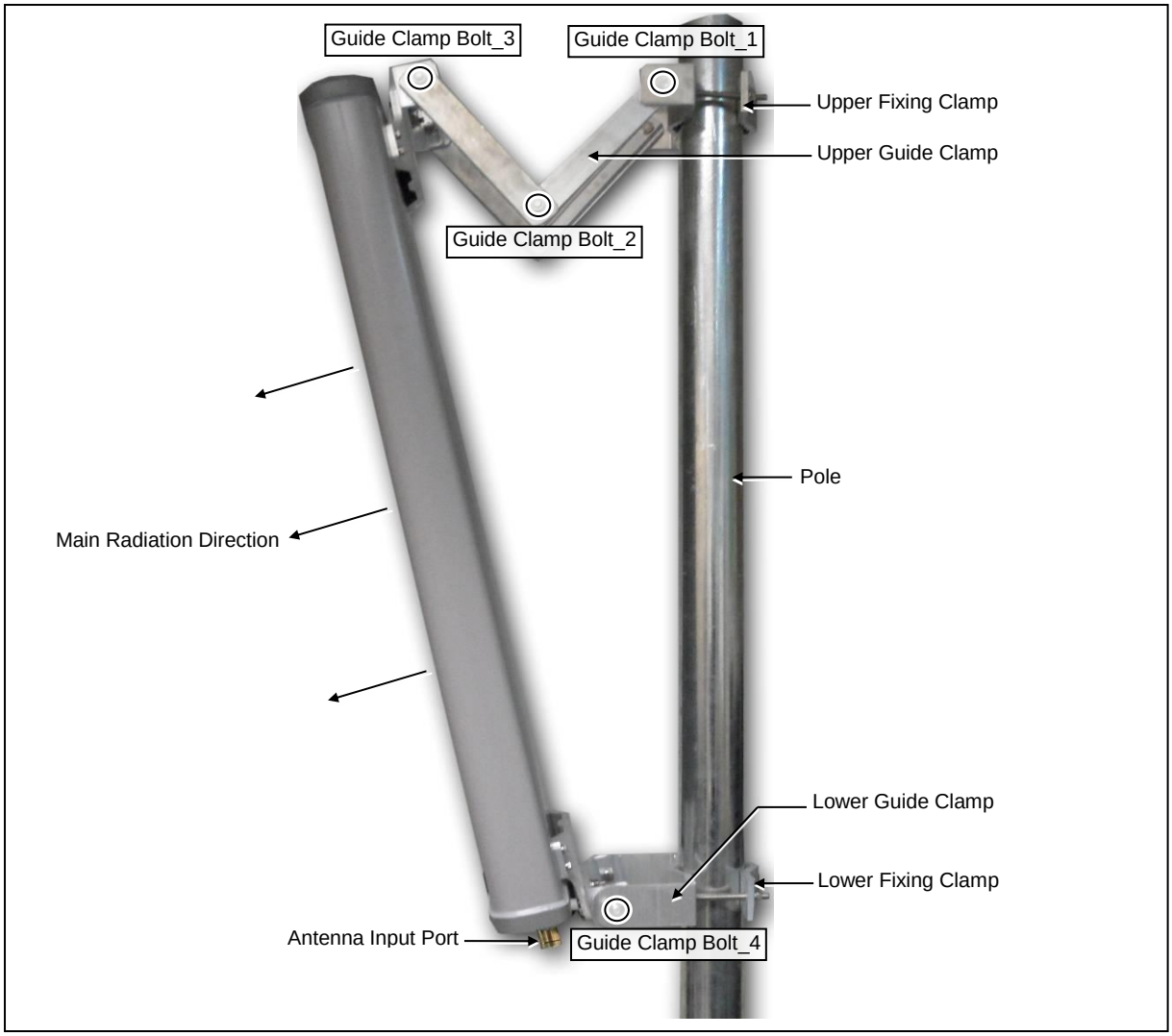

Copyright © 2017, All Rights Reserved.

Appendix C Clean the Optical Connectors

Introduction

When connecting an optical cable to the system, the performance of the system can be decreased or failures can occur if the core section of an optical connector is dirty due to dust or foreign material. Therefore, operator should clean the optical connector before connecting an optical cable to the system.

When using an optical connector cleaner, use the products shown in the example below or their equivalents.

Examples:

Manufacturer-USCONEC (http://www.usconec.com)

- IBC™ Brand Cleaner (P/N: 9393): For LC-LC and MU Connector Cleaning
- IBC™ Brand Cleaner (P/N: 9392): For SC Connector Cleaning
- IBC™ Brand Cleaner (P/N: 12910): For ODC Connector Cleaning

Manufacturer-The Fibers (www.thefibers.com)

- HuxCleaner 1.25 mm Type: For LC and MU Connector Cleaning
- HuxCleaner 2.5 mm Type: For SC, FC and ST Connector Cleaning

Follow the manufacturer's instructions for cleaning the optical connectors.

Measure the Optical Output and Connecting the Optical Connector

To measure the optical output

1 Using an optical power meter check the optical output.

Copyright © 2017, All Rights Reserved.

2 If the optical output measurement result meets the reference value, clean the connector again and connect it.

3 If the measurement result does not meet the reference value, discard the cable, replace it with a new cable, and then clean the new one and connect it to the system.

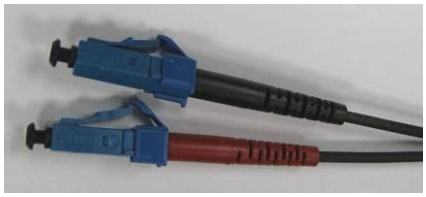

[LC/PC Plug]

[Optical Power meter]

Copyright © 2017, All Rights Reserved.

Appendix D Standard Torque

When operator fastens the bolt, refer to the standard torque value below to prevent the equipment and bolt from damage and secure by fastening. When the torque value for each connection part is defined already, refer to the defined value.

Table 39. Standard Torque Value for Fastening Bolts

Bolt Spec.	Torque Value (N·m)	Torque Value (lbf·in)	Torque Value (kgf·cm)
M3	0.63	5.6	6.4
M4	1.5	13	15
M5	2.8	25	29
M6	4.9	43	50
M8	12	110	127
M10	25	217	250
M12	42	372	428

Table 40. Brass Bolts Torque Value

Bolt Spec.	Torque Value (N·m)	Torque Value (lbf·in)	Torque Value (kgf·cm)
M6	2.9	26	30
M8	6.3	56	64

Table 41. Connector Connection Torque Value

Connector	Torque Value (N·m)	Torque Value (lbf·in)	Torque Value (kgf·cm)
SMA connector	0.59	5.2	6
TNC connector	0.88	7.8	9
N-type connector	2	17	20
DIN-type connector	25	217	250
4.3-10-type connector	5	44	51

Torque value can be different, defending on the material, characteristic and specification of the equipment and fastener. Make sure to check the proper torque value for each specification of the equipment and fastener.

Copyright © 2017, All Rights Reserved.

SAMSUNG

RFD01P Series
Installation Manual

Document Version 2.0

© 2017 Samsung Electronics Co., Ltd.
All rights reserved.