SAMSUNG

SAMSUNG LASER MFP User's Guide

SCX-4720FN

For UK customers:

To reorder your consumables
Call 0800 3164060

For Technical Assistance
Call 0870 2420303

About the User's Guide

This Laser MFP User's Guide provides information you need for setting up your machine and installing the supplied software. It also provides all of the detailed instructions for using your machine as a printer, a scanner, a copier, and a facsimile, and information for maintaining and troubleshooting the machine. The User's Guide shows you how to use a USB flash drive with your machine for scanning and saving documents, and printing documents stored on the USB flash drive.

This guide also provides the basic description of the multi-function application, Samsung SmarThru. SmarThru allows you to scan and edit images and to scan for copying. SmarThru also lets you access scanned images that you can then email from your computer.

This manual is provided for information purposes only. All information included herein is subject to change without notice. Samsung Electronics is not responsible for any changes, direct or indirect, arising from or related to use of this manual.

© 2005 Samsung Electronics Co., Ltd. All rights reserved.

- SCX-4720FN is model names of Samsung Electronics Co., Ltd.
- SAMSUNG and Samsung logo are trademarks of Samsung Electronics Co., Ltd.
- Centronics is a trademark of Centronics Data Computer Corporation.
- IBM and IBM PC are trademarks of International Business Machines Corporation.
- PCL and PCL 6 are trademarks of Hewlett-Packard company.
- Microsoft, Windows, Windows 98, Windows Me, Windows 2000, Windows NT 4.0, and Windows XP are registered trademarks of Microsoft Corporation.
- All other brand or product names are trademarks of their respective companies or organizations.

CONTENTS

1. INTRODUCTION

Special Features 1.2
Understanding Component Locations 1.4
Front View 1.4
Rear View 1.5
Control Panel Functions 1.6

2. GETTING STARTED

Unpacking 2.2
Selecting a Location 2.4
Installing the Toner Cartridge 2.5
Loading Paper 2.7
Making Connections 2.11
Turning the Machine On 2.14
Changing the Display Language 2.15
Setting the Machine ID 2.16
Entering Characters Using the Number Keypad 2.17
Setting the Date and Time 2.19
Changing the Clock Mode 2.20
Setting the Paper Size and Type 2.20
Setting Sounds 2.21
Speaker, Ringer, Key Sound, and Alarm Sound 2.21
Speaker Volume 2.22
Using the Save Modes 2.23
Toner Save Mode 2.23
Toll Save Mode 2.23
Power Save Mode 2.24
Scan Lamp Save Mode 2.25
About Samsung Software 2.26
Printer Driver Features 2.27
Installing Samsung Software in Windows 2.28
System Requirements 2.28
Installing Software for Local Printing 2.29
Installing Software for Network Printing 2.34
Repairing Software 2.41
Removing Software 2.43
Uninstalling the MFP Driver 2.43
Uninstalling the SmarThru 2.44
Uninstalling the Network Scan Driver 2.44
Using the Printer Settings Utility 2.45

3. Paper Handling

Selecting Print Materials 3.2
Paper Type, Input Sources, and Capacities 3.2
Guidelines for Paper and Special Materials 3.3
Loading Paper 3.4
In the Standard Tray 3.4
In the Multipurpose Tray 3.6
Using the Manual Feed Mode 3.8
Selecting an Output Location 3.10
Printing to the Front Output Tray (Face down) 3.10
Printing to the Rear Output Slot (Face up) 3.11

4. Printing Tasks

Printing a Document in Windows 4.2
Canceling a Print Job 4.3
Printer Settings 4.4
Layout tab 4.5
Paper Tab 4.6
Graphic Tab 4.8
Extras Tab 4.10
About Tab 4.11
Printer Tab 4.11
Using a Favorite Setting 4.12
Using Help 4.12
Printing Multiple Pages on One Sheet of Paper 4.13
Printing Posters 4.14
Fitting Your Document to a Selected Paper Size 4.16
Printing a Reduced or Enlarged Document 4.17
Using Watermarks 4.18
Using an Existing Watermark 4.18
Creating a Watermark 4.19
Editing a Watermark 4.20
Deleting a Watermark 4.20
Using Overlays 4.21
What is an Overlay? 4.21
Creating a New Page Overlay 4.21
Using a Page Overlay 4.22
Deleting a Page Overlay 4.24

5. Copying

Loading Paper for Copying 5.2
Selecting the Paper Tray 5.2
Preparing a Document 5.3
Making Copies on the Document Glass 5.4
Making Copies from the Automatic Document Feeder 5.5
Setting Copy Options 5.7
Darkness 5.7
Original Type 5.7
Reduced/Enlarged Copy 5.8
Number of Copies 5.9

Using Special Copy Features 5.9
Clone Copying 5.10
Collation Copying 5.10
Auto Fit Copying 5.11
2 Sides on 1 Page Copying 5.11
2 Up or 4 Up Copying 5.12
Poster Copying 5.13
Changing the Default Settings 5.14
Setting the Time Out Option 5.15

6. SCANNING

Scanning Basics 6.2
Scanning From the Control Panel to an Application 6.3
Scanning Using Samsung SmarThru 6.4
Using Onscreen Help File 6.6
Scanning Using the WIA Driver 6.7
Scanning to USB Flash Drive 6.8
Scanning Using the Network Scan 6.9
About Network Scan 6.9
Setting the Network Scan 6.9
Scanning Using Network Scan 6.9
Setting Network Scan Timeout 6.11
Using the Network Scan driver 6.12
Adding a Scanner 6.12
Removing a Scanner 6.14
Setting the properties 6.14
Scanning using the Network Scan driver 6.17
Scanner Icons 6.17

7. FAXING

Changing the Fax Setup options 7.2
Available Fax Setup Options 7.3
Loading a Document 7.6
Selecting the Paper Tray 7.9
Adjusting the Document Resolution 7.9
Sending a Fax Automatically 7.11
Sending a Fax Manually 7.12
Redialing the Last Number 7.12
Confirming Transmission 7.13
Automatic Redialing 7.13
About Receiving Modes 7.14
Loading Paper for Receiving Faxes 7.15
Receiving Automatically in Fax Mode 7.15
Receiving Manually in Tel Mode 7.15
Receiving Automatically in Ans/Fax Mode 7.16
Receiving Manually Using an Extension Telephone 7.16
Receiving Faxes Using the DRPD Mode 7.17
Receiving Faxes in the Memory 7.18
One-touch Dialing 7.19
Storing a Number for One-touch Dialing 7.19
Sending a Fax using a One-touch Number 7.20

Speed Dialing 7.21
Storing a Number for Speed Dialing 7.21
Sending a Fax using a Speed Dial Number 7.22
Group Dialing 7.23
Setting a Group Dial Number 7.23
Editing Group Dial Numbers 7.24
Sending a Fax Using Group Dialing (Multi-address Transmission) 7.25
Searching for a Number in Memory 7.26
Searching Sequentially through the Memory 7.26
Searching with a Particular First Letter 7.26
Printing a Phonebook List 7.27
Sending Broadcast Faxes 7.28
Sending a Delayed Fax 7.29
Sending a Priority Fax 7.31
Adding Documents To a Scheduled Fax 7.32
Canceling a Scheduled Fax 7.33
Using Secure Receiving Mode 7.34
Printing Reports 7.35
Using Advanced Fax Settings 7.37
Changing Setting Options 7.37
Advanced Fax Setting Options 7.38

8. MAINTENANCE

Clearing the Memory 8.2
Cleaning Your Machine 8.3
Cleaning the Outside 8.3
Cleaning the Inside 8.3
Cleaning the Scan Unit 8.5
Maintaining the Toner Cartridge 8.6
Redistributing Toner 8.7
Replacing the Toner Cartridge 8.8
Setting the Notify Toner Option 8.10
Cleaning the Drum 8.10
Ignoring the Toner Empty Message 8.12
Consumables and Replacement Parts 8.13
Replacing the ADF Rubber Pad 8.14
Setting E-mail Notification 8.16
Setting the Machine Setup tab 8.16
Setting the Contact Information tab 8.19

9. TROUBLESHOOTING

Clearing Document Jams 9.2
Input Misfeed 9.2
Exit Misfeed 9.3
Roller Misfeed 9.4
Clearing Paper Jams 9.5
In Tray 1 ..... 9.5
In Optional Tray 2 ..... 9.6
In the Fuser Area or Around the Toner Cartridge 9.7
In the Paper Exit Area 9.9
In the Multipurpose Tray 9.10
Tips for Avoiding Paper Jams 9.11

Clearing LCD Error Messages 9.12
Solving Other Problems 9.16
Paper Feeding Problems 9.16
Printing Problems 9.17
Printing Quality Problems 9.19
Copying Problems 9.24
Scanning Problems 9.25
Fax Problems 9.26
Network Scan Problems 9.27
Common Linux Problems 9.28

10. Using USB Flash Drive

About USB Flash Drives 10.2
Installing a USB Flash Drive 10.2
Scanning to USB Flash Drive 10.3
Scanning With Default Settings 10.3
Scanning With Your Own Settings 10.4
Managing the USB Flash Drive 10.6
Changing the Default Settings 10.6
Deleting an Image File 10.7
Formatting the USB Flash Drive 10.8
Viewing the USB Memory Status 10.9
Printing From the USB Flash Drive 10.10
Backing Up Data 10.11

A. Using Your Machine In Linux

Getting Started A.2
Installing the MFP Driver A.3
System Requirements A.3
Installing the MFP Driver A.4
Uninstalling the MFP Driver A.6
Using the MFP Configurator A.7
Opening the MFP Configurator A.7
Printers Configuration A.8
Scanners Configuration A.9
MFP Ports Configuration A.10
Configuring Printer Properties A.11
Printing a Document A.12
Printing from Applications A.12
Printing Files A.13
Scanning a Document A.14
Using the Image Editor A.17

B. Using Your Machine on a Network

About Sharing the Machine on a Network B.2
Setting Up a Locally-Shared Machine B.3
In Windows 98/Me B.3
In Windows NT 4.0/2000/XP B.4
Setting Up a Network-Connected Machine B.5
Configuring Network Parameters on the Control Panel B.5

C. Installing Machine Options

Installing Memory DIMM C.2
Removing a Memory DIMM C.4
Installing an Optional Tray C.5
Setting Tray 2 in the Printer Properties C.7

D. Specifications

General Specifications D.2
Scanner and Copier Specifications D.3
Printer Specifications D.4
Facsimile Specifications D.5
Paper Specifications D.6
Overview D.6
Supported Sizes of Paper D.7
Guidelines for Using Paper D.8
Paper Specifications D.9
Paper Output Capacity D.9
Paper Storage Environment D.9

Important Precautions and Safety Information

When using this machine, these basic safety precautions should always be followed to reduce risk of fire, electric shock and injury to people:

1. Read and understand all instructions.
2. Use common sense whenever operating electrical appliances.
3. Follow all warnings and instructions marked on the machine and in the literature accompanying the machine.
4. If an operating instruction appears to conflict with safety information, heed the safety information. You may have misunderstood the operating instruction. If you cannot resolve the conflict, contact your sales or service representative for assistance.
5. Unplug the machine from the AC wall socket and/or telephone jack before cleaning. Do not use liquid or aerosol cleaners. Use only a damp cloth for cleaning.
6. Do not place the machine on an unstable cart, stand or table. It may fall, causing serious damage.
7. Your machine should never be placed on, near or over a radiator, heater, air conditioner or ventilation duct.
8. Do not allow anything to rest on the power. Do not locate your machine where the cords will be abused by persons walking on them.
9. Do not overload wall outlets and extension cords. This can diminish performance, and may result in the risk of fire or electric shock.
10. Do not allow pets to chew on the AC power, telephone or PC interface cords.
11. Never push objects of any kind into the machine through case or cabinet openings. They may touch dangerous voltage points, creating a risk of fire or shock. Never spill liquid of any kind onto or into the machine.
12. Your machine may have a heavy cover for optimal pressure on the document for the best scanning and/or faxing (usually the flatbed-type machine). In this case, replace the cover after placing document on the scan glass, by holding and moving it down slowly until it seats on its location.
13. To reduce the risk of electric shock, do not disassemble the machine. Take it to a qualified service technician when repair work is required. Opening or removing covers may expose you to dangerous voltages or other risks. Incorrect reassembly could cause electric shock when the unit is subsequently used.
14. Unplug the machine from the telephone jack, PC and AC wall outlet and refer servicing to qualified service personnel under the following conditions:
    - When any part of the power cord, plug or connecting cable is damaged or frayed.
    - If liquid has been spilled into the machine.
    - If the machine has been exposed to rain or water.
    - If the machine does not operate properly after instructions have been followed.
    - If the machine has been dropped, or the cabinet appears damaged.
    - If the machine exhibits a sudden and distinct change in performance.

15. Adjust only those controls covered by the operating instructions. Improper adjustment of other controls may result in damage, and may require extensive work by a qualified service technician to restore the machine to normal operation.
16. Avoid using this machine during a lightning storm. There may be a remote risk of electric shock from lightning. If possible, unplug the AC power and telephone cord for the duration of the lightning storm.
17. SAVE THESE INSTRUCTIONS.
18. Use only No.26 AWG or larger telephone line cord.

Laser Safety Statement

The printer is certified in the U.S. to conform to the requirements of DHHS 21 CFR, chapter 1 Subchapter J for Class I(1) laser products, and elsewhere is certified as a Class I laser product conforming to the requirements of IEC 825.

Class I laser products are not considered to be hazardous. The laser system and printer are designed so there is never any human access to laser radiation above a Class I level during normal operation, user maintenance or prescribed service condition.

WARNING

Never operate or service the printer with the protective cover removed from Laser/ Scanner assembly. The reflected beam, although invisible, can damage your eyes.

CAUTION - CLASS 3B LASER RADIATION WHEN OPEN AVOID EXPOSURE TO THE BEAM.

DANGER - LASER RADIATION AVOID DIRECT EXPOSURE TO BEAM.

DANGER - RADIATIONS INVISIBLES DU LASER EN CAS D'OUVERTURE. EVITER TOUTE EXPOSITION DIRECTE AU FAISCEAU.

VORSICHT - UNSICHTBARE LASERSTRAHLUNG, WENN ABDECKUNG GEÖFFNET. NICHT DEM STRAHL AUSSETZEN.

ATTENZIONE - RADIAZIONE LASER INVISIBILE IN CASO DI APERTURA. EVITARE L'ESPOSIZIONE AL FASCIO.

PRECAUCIÓN - RADIACIÓN LASER INVISIBLE CUANDO SE ABRE. EVITAR EXPONERSE AL RAYO.

PERIGO - RADIAÇÃO LASER INVISÍVEL AO ABRIR. EVITE EXPOSIÇÃO DIRECTA AO FEIXE.

GEVAAR - ONZICHTBARE LASERSTRALEN BIJ GEOPENDE KLEP. DEZE KLEP NIET OPENEN.

ADVARSEL - USYNLIG LASERSTRÅLNING VED ÅBNING. UNDGÅ UDSAETTELSE FOR STRÅLNING.

ADVARSEL. - USYNLIG LASERSTRÅLNING NÅR DEKSEL ÅPNES. UNNGÅ EKSPONERING FOR STRÅLEN.

VARNING - OSYNLIG LASERSTRÅLNING NÄR DENNA DEL ÄR ÖPPEN. STRÅLEN ÄR FARLIG.

VAROITUS - NÄKYMÄTÖNTÄ LASERSÄTEILYÄ AVATTAESSA. VARO SUORAA ALTISTUMISTA SÄTEELLE.

注 意 - 严禁揭开此盖, 以免激光泄露灼伤

주 의 - 이 덮개를 열면 레이저광에 노출될 수 있으므로 주의하십시오.

Ozone Safety

During normal operation, this machine produces ozone. The ozone produced does not present a hazard to the operator. However, it is advisable that the machine be operated in a well ventilated area.

If you need additional information about ozone, please request your nearest Samsung dealer.

Mercury Safety

LAMP(S) INSIDE THIS PRODUCT CONTAIN MERCURY AND MUST BE RECYCLED OR DISPOSED OF ACCORDING TO LOCAL, STATE OR FEDERAL LAWS. For details see lamprecycle.org, eiae.org, or call 1-800-Samsung

Power Saver

This machine contains advanced energy conservation technology that reduces power consumption when it is not in active use.

When the machine does not receive data for an extended period of time, power consumption is automatically lowered.

The energy star emblem does not represent EPA endorsement of any machine or service.

Recycling

Please recycle or dispose of the packaging material for this product in an environmentally responsible manner.

Correct Disposal of This Product (Waste Electrical & Electronic Equipment)

(Applicable in the European Union and other European countries with separate collection systems)

This marking shown on the product or its literature, indicates that it should not be disposed with other household wastes at the end of its working life. To prevent possible harm to the environment or human health from uncontrolled waste disposal, please separate this from other types of wastes and recycle it responsibly to promote the sustainable reuse of material resources.

Household users should contact either the retailer where they purchased this product, or their local government office, for details of where and how they can take this item for environmentally safe recycling.

Business users should contact their supplier and check the terms and conditions of the purchase contract. This product should not be mixed with other commercial wastes for disposal.

Radio Frequency Emissions

FCC Information to the User

This device copmlies with Part 15 of the FCC Rules. Operation is subject to the following two conditions:

- This device may not cause harmful interference, and
- This device must accept any interference received, including interference that may cause undesired operation.

This equipment has been tested and found to comply with the limits for a Class B digital device, pursuant to Part 15 of the FCC Rules. These limits are designed to provide reasonable protection against harmful interference in a residential installation. This equipment generates, uses and can radiate radio frequency energy and, if not installed and used in accordance with the instructions, may cause harmful interference to radio communications. However, there is no guarantee that interference will not occur in a particular installation. If this equipment does cause harmful interference to radio or television reception, which can be determined by turning the equipment off and on, the user is encouraged to try to correct the interference by one or more of the following measures:

- Reorient or relocate the receiving antenna.
- Increase the separation between the equipment and receiver.
- Connect the equipment into an outlet on a circuit different from that to which the receiver is connected.
- Consult the dealer or experienced radio TV technician for help.

CAUTION: Change or modifications not expressly approved by the manufacturer responsible for compliance could void the user's authority to operate the equipment.

Canadian Radio Interference Regulations

This digital apparatus does not exceed the Class B limits for radio noise emissions from digital apparatus as set out in the interference-causing equipment standard entitled “Digital Apparatus”, ICES-003 of the Industry and Science Canada.

Cet appareil numérique respecte les limites de bruits radioélectriques applicables aux appareils numériques de Classe B prescrites dans la norme sur le matériel brouilleur: “Appareils Numériques”, ICES-003 édictée par l’Industrie et Sciences Canada.

Fax Branding

The Telephone Consumer Protection Act of 1991 makes it unlawful for any person to use a computer or other electronic device to send any message via a telephone facsimile machine unless such message clearly contains in a margin at the top or bottom of each transmitted page or on the first page of the transmission the following information:

(1) the date and time of transmission

(2) identification of either business, business entity or individual sending the message; and

(3) telephone number of either the sending machine, business, business entity or individual.

The Telephone Company may make changes in its communications facilities, equipment operations or procedures where such action is reasonably required in the operation of its business and is not inconsistent with the rules and regulations in FCC Part 68. If such changes can be reasonably expected to render any customer terminal equipment incompatible with telephone company communications facilities, or require modification or alteration of such terminal equipment, or otherwise materially affect its use or performance, the customer shall be given adequate notice in writing, to allow the customer an opportunity to maintain uninterrupted service.

Ringer Equivalence Number

The Ringer Equivalence Number and FCC Registration Number for this machine may be found on the label located on the bottom or rear of the machine. In some instances you may need to provide these numbers to the telephone company.

The Ringer Equivalence Number (REN) is a measure of the electrical load placed on the telephone line, and is useful for determining whether you have "overloaded" the line. Installing several types of equipment on the same telephone line may result in problems making and receiving telephone calls, especially ringing when your line is called. The sum of all Ringer Equivalence Numbers of the equipment on your telephone line should be less than five in order to assure proper service from the telephone company. In some cases, a sum of five may not be usable on your line. If any of your telephone equipment is not operating properly, you should immediately remove it from your telephone line, as it may cause harm to the telephone network.

WARNING:

FCC Regulations state that changes or modifications to this equipment not expressly approved by the manufacturer could void the user's authority to operate this equipment. In the event that terminal equipment causes harm to the telephone network, the telephone company should notify the customer that service may be stopped. However, where prior notice is impractical, the company may temporarily cease service, providing that they:

a) promptly notify the customer.

b) give the customer an opportunity to correct the equipment problem.

c) inform the customer of the right to bring a complaint to the Federal Communication Commission pursuant to procedures set out in FCC Rules and Regulations Subpart E of Part 68.

You should also know that:

- Your machine is not designed to be connected to a digital PBX system.
- If you intend to use a computer modem or fax modem on the same phone line as your machine, you may experience transmission and reception problems with all the equipment. It is recommended that no other equipment, except for a regular telephone, share the line with your machine.
- If your area experiences a high incidence of lightning or power surges, we recommend that you install surge protectors for both the power and the telephone lines. Surge protectors can be purchased from your dealer or telephone and electronic specialty stores.
- When programming emergency numbers and/or making test calls to emergency numbers, use a non-emergency number to advise the emergency service dispatcher of your intentions. The dispatcher will give you further instructions on how to actually test the emergency number.
- This machine may not be used on coin service or party lines.
- This machine provides magnetic coupling to hearing aids.
- You may safely connect this equipment to the telephone network by means of a standard modular jack, USOC RJ-11C.

Declaration of Conformity (European Countries)

Approvals and Certifications

The CE marking applied to this product symbolizes Samsung Electronics Co., Ltd. Declaration of Conformity with the following applicable 93/68/EEC Directives of the European Union as of the dates indicated:

January 1, 1995: Council Directive 73/23/EEC Approximation of the laws of the member states related to low voltage equipment.

January 1, 1996: Council Directive 89/336/EEC (92/31/EEC), approximation of the laws of the Member States related to electromagnetic compatibility.

March 9, 1999: Council Directive 1999/5/EC on radio equipment and telecommunications terminal equipment and the mutual recognition of their conformity.

A full declaration, defining the relevant Directives and referenced standards can be obtained from your Samsung Electronics Co., Ltd. representative.

EC Certification

Certification to 1999/5/EC Radio Equipment & Telecommunications Terminal Equipment Directive (FAX)

This Samsung product has been self-certified by Samsung for pan-European single terminal connection to the analogue public switched telephone network (PSTN) in accordance with Directive 1999/5/EC. The product has been designed to work with the national PSTNs and compatible PBXs of the European countries:

In the event of problems, you should contact the Euro QA Lab of Samsung Electronics Co., Ltd. in the first instance.

The product has been tested against TBR21. To assist in the use and application of terminal equipment which complies with this standard, the European Telecommunication Standards Institute (ETSI) has issued an advisory document (EG 201 121) which contains notes and additional requirements to ensure network compatibility of TBR21 terminals. The product has been designed against, and is fully compliant with, all of the relevant advisory notes contained in this document.

Replacing the Fitted Plug (for UK Only)

IMPORTANT

The mains lead for this machine is fitted with a standard (BS 1363) 13 amp plug and has a 13 amp fuse. When you change or examine the fuse, you must re-fit the correct 13 amp fuse. You then need to replace the fuse cover. If you have lost the fuse cover, do not use the plug until you have another fuse cover.

Please contact the people from you purchased the machine.

The 13 amp plug is the most widely used type in the UK and should be suitable. However, some buildings (mainly old ones) do not have normal 13 amp plug sockets. You need to buy a suitable plug adaptor. Do not remove the moulded plug.

WARNING

If you cut off the moulded plug, get rid of it straight away.

You cannot rewire the plug and you may receive an electric shock if you plug it into a socket.

IMPORTANT WARNING: You must earth this machine.

The wires in the mains lead have the following color code:

- Green and Yellow: Earth
- Blue: Neutral
- Brown: Live

If the wires in the mains lead do not match the colors marked in your plug, do the following:

You must connect the green and yellow wire to the pin marked by the letter “E” or by the safety ‘Earth symbol’ or colored green and yellow or green.

You must connect the blue wire to the pin which is marked with the letter “N” or colored black.

You must connect the brown wire to the pin which is marked with the letter “L” or colored red.

You must have a 13 amp fuse in the plug, adaptor, or at the distribution board.

SAMSUNG ELECTRONICS

EU Declaration of Conformity (RTTE)

We, Samsung Electronics Co, Ltd.

Shandong Samsung Telecommunications Co., Ltd.Sanxing Road,
Weihai Hi-Tech, IDZ Shandong Province, China 264209
(factory name, address)

declare under our sole responsibility that the product

Multi-function Printer
model "RK20MFF"

to which this declaration relates is in conformity with

R&TTE Directive 1999/5/EC (Annex Ⅱ)
Low Voltage Directive 73/23/EEC
EMC Directive 89/336/EEC, 92/31/EEC

By application of the following standards

R&TTE : TBR 21, EG 201 121 V1.1.3

LVD : EN 60950-1:2001

EMC : EN55022:1998 EN55024:1998 + A1:2001, EN61000-3-2:2000,

EN61000-3-3:1995 + A1:2001

(Manufacturer)

Samsung Electronics co.,ltd
#259, KongDan-Dong, GuMi-City
KyungBuk, Korea 730-030

2005-08-04
(place and date of issue)

任燦淳

Whan-Soon Yim / General Manager
(name and signature of authorized person)

(Representative in the EU)

Samsung Electronics Euro QA Lab.
Blackbushe Business Park
Saxony Way, Yateley, Hampshire
GU46 6GG, UK

2005-08-05
(place and date of issue)

Yong-Sang Park / Manager
(name and signature of authorized person)

Differences Between British and American English

British English	American English
(Re)dialling	(Re)dialing
Colour	Color
Emphasise	Emphasize
Recognise	Recognize
Organise	Organize
Authorise	Authorize
Cancelling	Canceling
Customise	Customize
Grey	Gray

1 INTRODUCTION

Thank you for purchasing this Samsung multifunctional product. Your machine provides printing, copying, scanning, and faxing functions!

This chapter includes:

- **Special Features**
- **Understanding Component Locations**

Special Features

Your new machine is equipped with special features that improve the print quality. You can:

Print with excellent quality and speed

- You can print up to **1200 dpi [Best]**. See page 4.8.
- Your machine prints A4-sized paper at up to 20 ppm and letter-sized paper at up to 20 ppm (pages per minute).

Handle paper flexibly

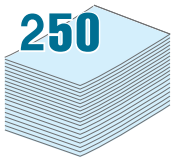

- **Multipurpose Tray** supports letterhead, envelopes, labels, transparencies, custom-sized materials, postcards, and heavy paper. A 50-sheet **Multipurpose Tray** supports plain paper.
- The **Standard 250-sheet input tray** (Tray1) and **optional 250-sheet input tray** (Tray2) supports A4/letter-sized paper.

Create professional documents

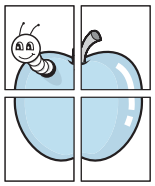

- Print **Watermarks**. You can customize your documents with words, such as "Confidential." See page 4.18.
- Print **Posters**. The text and pictures of each page of your document are magnified and printed across the sheet of paper and taped together to form a poster. See page 4.14.

Save time and money

- You can print multiple pages on one single sheet of paper to save paper.
- You can use preprinted forms and letterhead on plain paper. See "Using Overlays" on page 4.21
- This machine automatically **conserves electricity** by substantially reducing power consumption when not printing.
- This machine meets **Energy Star** guidelines for energy efficiency.

Expand the machine capacity

- This machine has 64 MB of memory which can be expanded to 192 MB.
- You can install an optional 250-sheet tray in your machine. This tray reduces how often you have to add paper to the machine.
- A Network interface enables network printing.

Print in various environments

- You can print in **Windows 98/Me/NT 4.0/2000/XP**.
- Your machine is compatible with various **Linux**.
- Your machine comes with both the **USB** and **Parallel** interface.
- You can also use a **Network interface**.

Use a USB flash drive

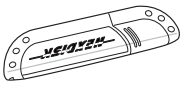

If you have a USB flash drive, you can use it in various ways with your machine.

- You can scan documents and save them on the USB flash drive.
- You can directly print data stored on the USB flash drive.
- You can manage the USB flash drive.
- You can back up data and restore backup files to the machine’s memory.

Understanding Component Locations

These are the main components of your machine:

Front View

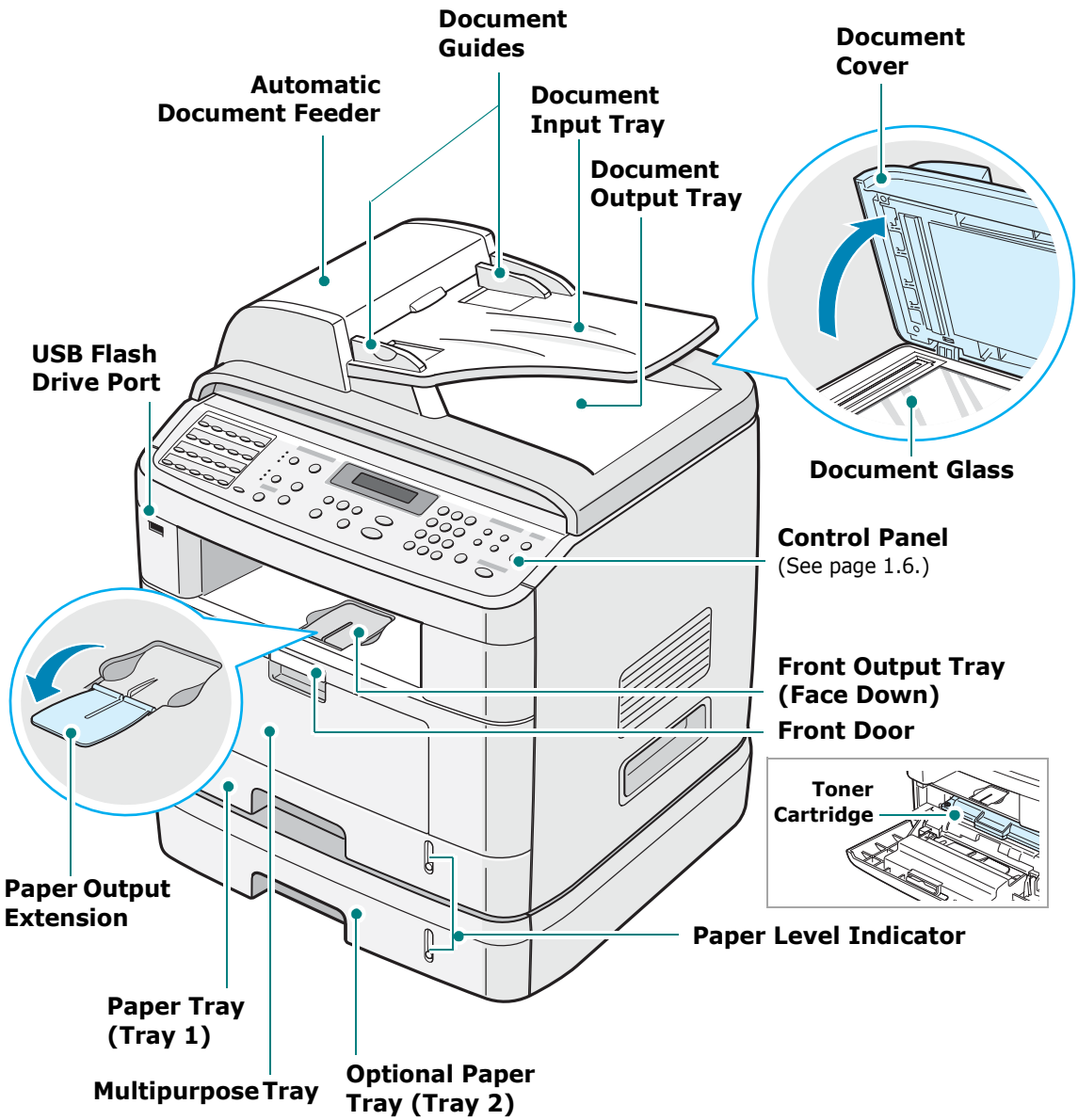

Rear View

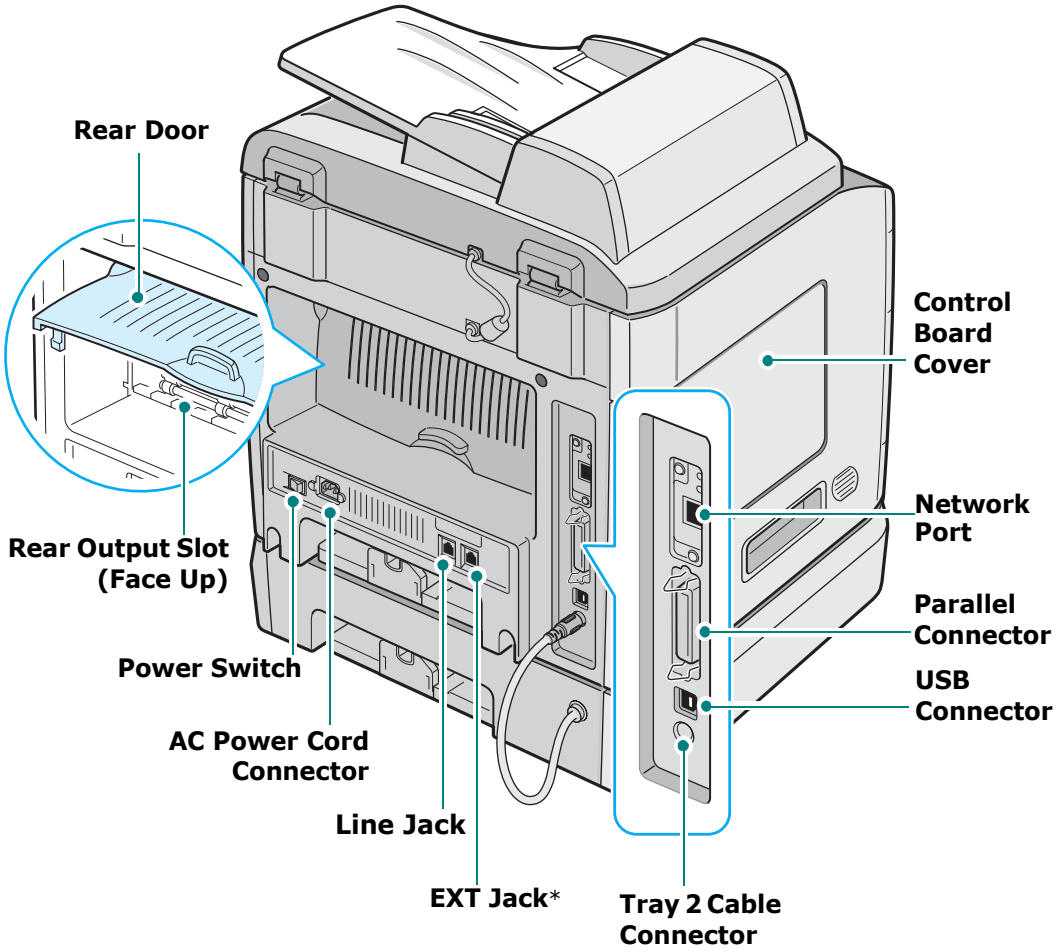

** If your country has a different telephone connection system, this socket may be blocked.*

Control Panel Functions

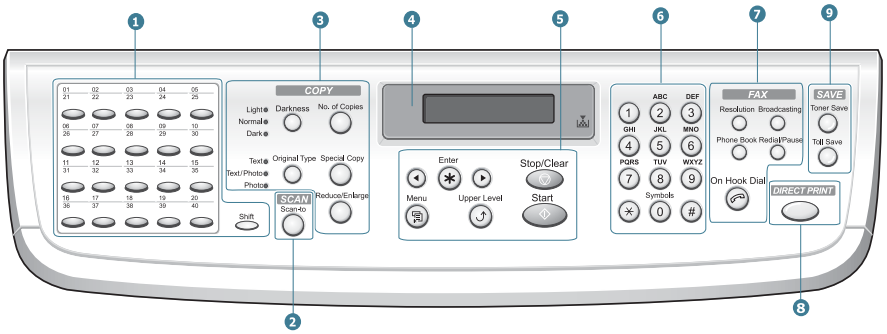

1		Allows you to store frequently-dialed fax numbers and dial them with the touch of a few buttons.
	Shift	Allows you to shift the one-touch buttons to the numbers 21 through 40.
2 SCAN	Scan-to	Allows you to access a list of your PC software programs that an image can be scanned to. You must create the scan list using the Samsung software (Printer Settings Utility) provided with this machine. Also allows you to scan and save documents in a USB flash drive, and manage it when it is inserted into the USB port of your machine. See Chapter 10, Installing a USB Flash Drive.
3 COPY	Darkness	Adjusts the brightness of the documents for the current copy job.
	Original Type	Selects the document type for the current copy job.
	No. of Copies	Selects the number of copies.
	Special Copy	Allows you to use special copy features, such as Clone, Collation, Auto Fit, 2 Sides on 1 page, 2/4 Up (multiple pages on a sheet), and Poster copying.
	Reduce/Enlarge	Makes a copy smaller or larger than the original.
4		Displays the current status and prompts during an operation.
		Turns on when the toner cartridge is empty.
5		Uses to scroll through the available options for the selected menu item.

5	Enter	Confirms the selection on the display.
	Menu	Enters Menu mode and scrolls through the menus available.
	Upper Level	Sends you back to the upper menu level.
	Stop/Clear	Stops an operation at any time. In Standby mode, clears/cancels the copy options, such as the darkness, the document type setting, the copy size, and the number of copies.
	Start	Starts a job.
6	1 2 3 4 5 6 7 8 9 * 0 #	Dials a number or enters alphanumeric characters.
7 FAX	Resolution	Adjusts the resolution of the documents for the current fax job.
	Broadcasting	Allows you to send a fax to multiple destinations.
	Phone Book	Allows you to store frequently-dialed fax numbers as one or two-digit speed dial or group dial numbers for automatic dialing and edit the stored numbers. Also allows you to print a Phonebook list.
	Redial/Pause	In Standby mode, redials the last number or in Edit mode, inserts a pause into a fax number.
	On Hook Dial	Engages the telephone line.
8	DIRECT PRINT	Allows you to directly print files stored on a USB flash drive when it is inserted into the USB port in the front of your machine.
9 SAVE	Toner Save	Allows you to save on toner by using less toner to print a document.
	Toll Save	Allows you to save on call costs by sending a fax at a preset toll-saving time. Using this feature, you can take advantage of lower long distance rates at night, for example.

MEMO

2 GETTING STARTED

This chapter gives you step-by-step instructions for setting up your machine.

This chapter includes:

- **Setting Up Your Machine**
  Unpacking
  Installing the Toner Cartridge
  Loading Paper
  Making Connections
  Turning the Machine On
- **Setting Up the Machine System**
  Changing the Display Language
  Setting the Machine ID
  Setting the Date and Time
  Setting the Paper Size and Type
  Setting Sounds
  Using the Save Modes
- **Installing Software**
  About Samsung Software
  Installing Samsung Software in Windows
  Repairing Software
  Removing Software
  Using the Printer Settings Utility

Setting Up Your Machine

Unpacking

1 Remove the machine and all accessories from the packing carton. Make sure that the machine has been packed with the following items:

Starter Toner Cartridge

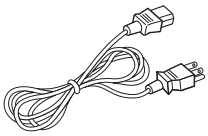

AC Power Cord*

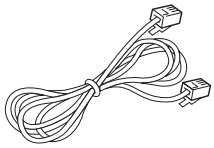

Telephone Line Cord*

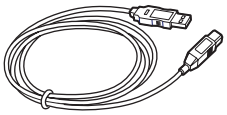

USB Cable

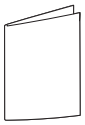

Quick Install Guide

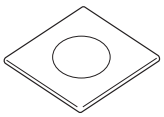

Printer CD-ROM**

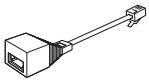

TAM Lead (for UK only)

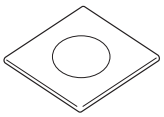

Network Utilities CD-ROM

Network Printer Quick Guide

*The appearance of the power cord and the telephone line cord may differ depending on your country's specifications.

**The CD-ROM contains the Samsung printer drivers, Scan drivers, Printer Settings Utility, SmarThru software, the Network Scan drivers, the Set IP, the user's guide, and the Adobe Acrobat Reader program.

NOTES:

- Components may differ from country to country.
- You should use the telephone line cord which is supplied with your machine. If you are replacing it with another vendor's, it should be AWG #26 or larger telephone line cord.
- Power cord must be plugged into a grounded power socket.

2 Remove the packing tape from the front, back, and sides of the machine.

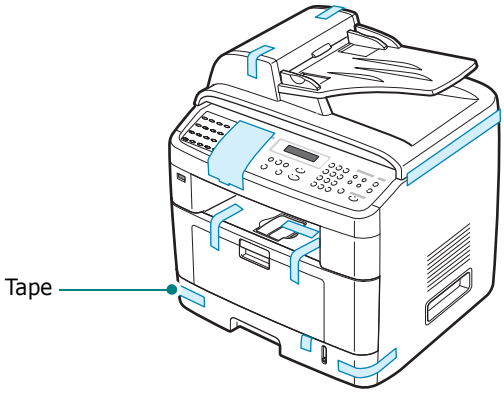

3 Gently pull the scan lock label until it comes away from the machine. This will pull the scanner locking switch into the FORWARD (Unlocked) position automatically.

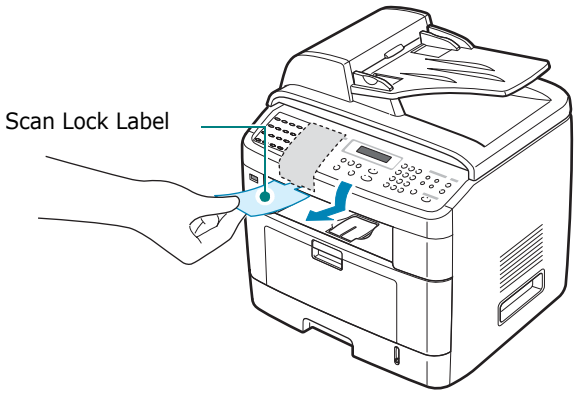

NOTE: When you are moving the machine or do not intend to use it for a long period of time, move the scanner locking switch BACKWARD to the lock position, as shown. To scan or copy a document, the switch must be unlocked.

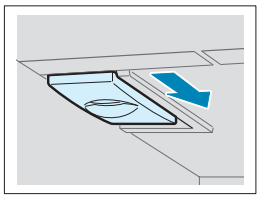

Selecting a Location

Select a level, stable place with adequate space for air circulation. Allow extra space for opening doors and trays.

The area should be well-ventilated and away from direct sunlight or sources of heat, cold, and humidity. Do not set the machine close to the edge of your desk or table.

Clearance Space

- **Front**: 482.6 mm (enough space so that the paper tray can be removed)
- **Back**: 100 mm (enough space for ventilation)
- **Right**: 100 mm
- **Left**: 100 mm (enough space for ventilation)

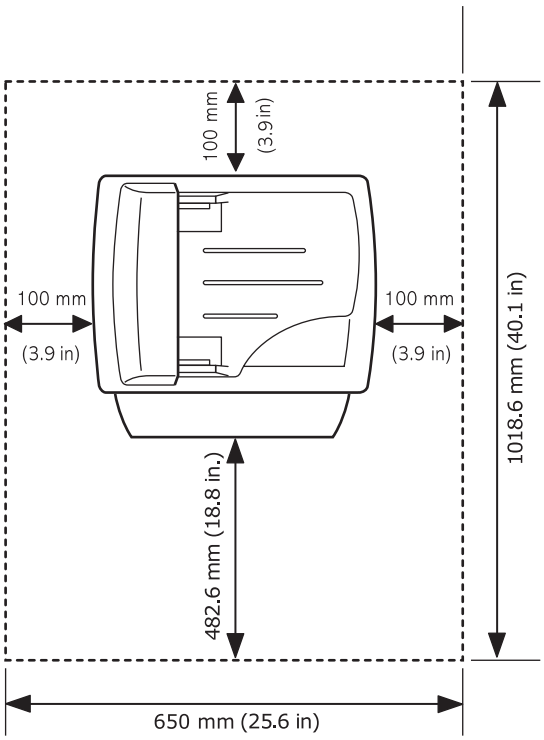

Installing the Toner Cartridge

1 Open the front door.

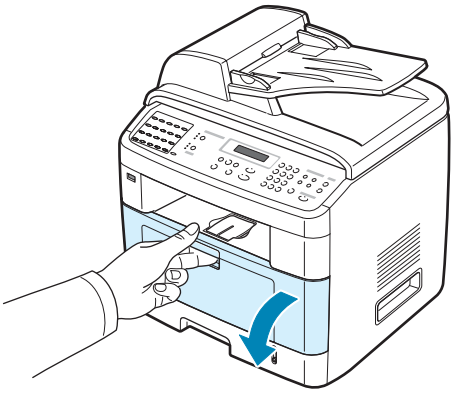

2 Remove the starter toner cartridge from its bag. Gently roll the cartridge 5 or 6 times to distribute the toner.

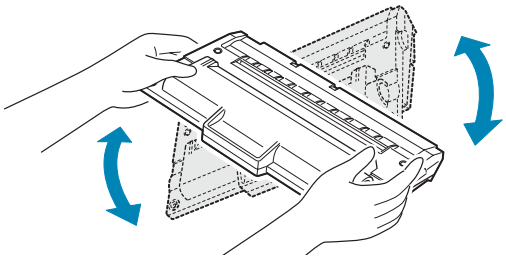

Thoroughly rolling the cartridge will assure maximum copies per cartridge.

NOTE: If toner gets on your clothing, wipe it off with a dry cloth and wash clothing in cold water. Hot water sets toner into fabric.

CAUTIONS:

- To prevent damage, do not expose the toner cartridge to light for more than a few minutes. Cover it with a piece of paper, if left exposed for more than a few minutes.
- Do not touch the green underside of the toner cartridge. Use the handle on the cartridge to avoid touching this area.

3 Hold the toner cartridge by the handle. Slowly insert the cartridge into the opening in the machine. Tabs on the sides of the cartridge and corresponding grooves within the machine will guide the cartridge into the correct position until it locks into place completely.

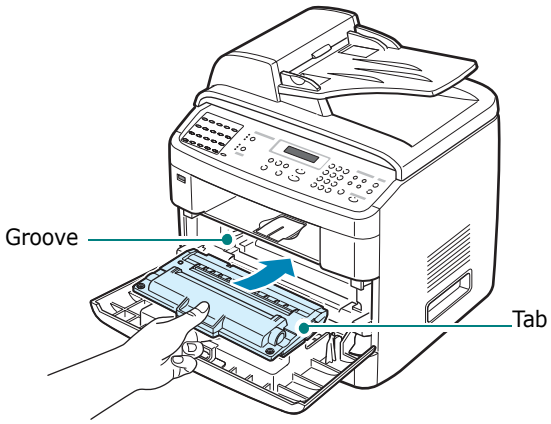

4 Close the front door. Make sure that the door is securely closed.

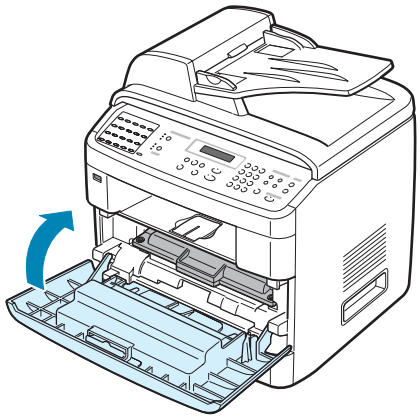

NOTE: When printing text at 5% coverage, you can expect a toner cartridge life of approximately 5,000 or 3,000 pages. (3,000 pages for the toner cartridge that is shipped with the machine.)

Loading Paper

The paper tray can hold a maximum of 250 sheets of 20 lb plain paper.

To load a stack of Letter-sized paper:

1 Pull open the paper tray and remove it from the machine.

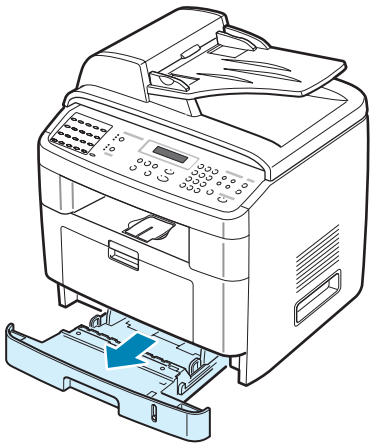

2 Fan the edges of the paper stack to separate the pages. Then tap the stack on a flat surface to even it up.

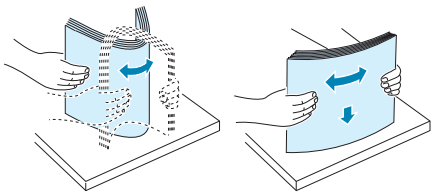

3 Insert the paper stack into the paper tray **with the side to be printed on facing down**.

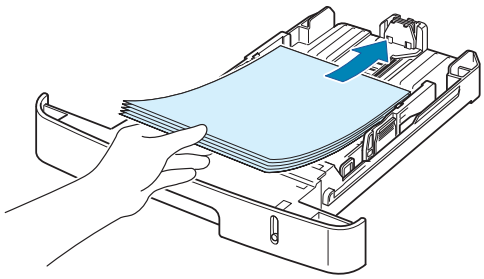

NOTE: If you want to load a different sized paper, you need to adjust the paper guides. For details, see page 2.9.

4 Pay attention to the paper limit mark on both inside walls of the tray. Paper overloading may cause paper jams.

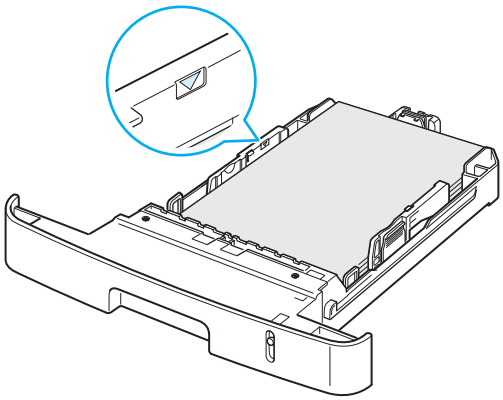

5 Insert and slide the paper tray back into the machine.

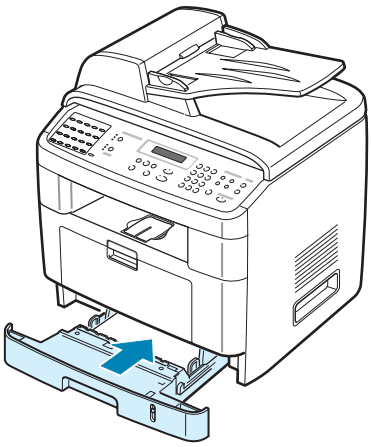

NOTE: After you load paper, you need to set up your machine for the paper type and size you loaded. See page 2.20 for copying and faxing, or page 4.6 for PC-printing. The settings made from the printer driver override the settings on the control panel.

Changing the Size of the Paper in the Paper Tray

To load longer sizes of paper, such as Legal-sized paper, you need to adjust the paper guides to extend the paper tray.

1. After pressing and unlatching the guide lock, slide the paper length guide out completely to extend the paper tray to its full length.

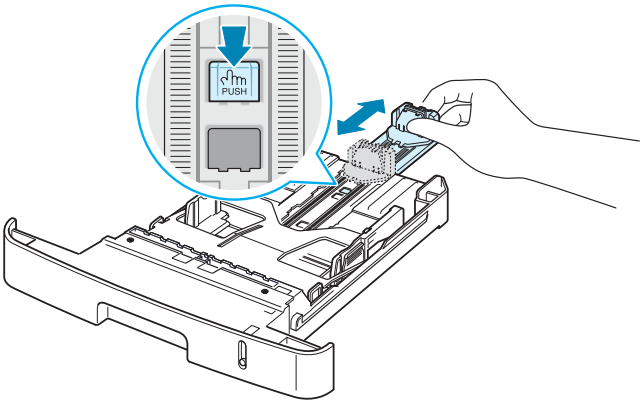

2. After inserting paper into the tray, squeeze the length guide and slide it until it lightly touches the end of the paper stack.

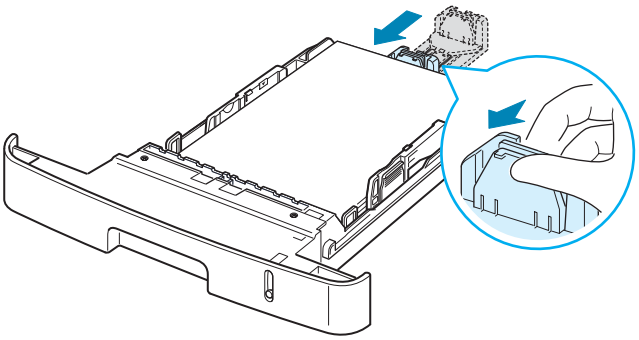

For paper smaller than Letter size, adjust the front paper length guide so that it lightly touches the paper stack.

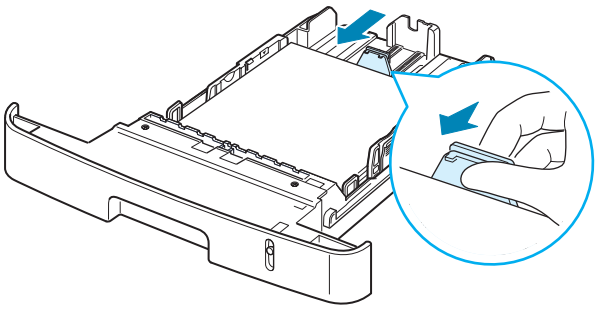

3 Squeeze the width guide, as shown and slide it to the stack of paper until it lightly touches the side of the stack.

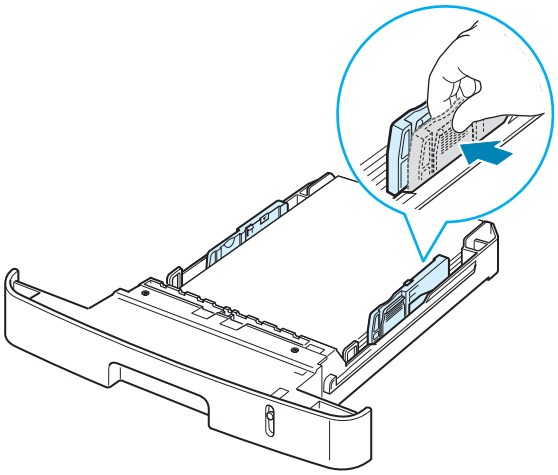

NOTES:

- Do not push the paper width guide far enough to cause the materials to warp.
- If you do not adjust the paper width guide, it may cause paper jams.

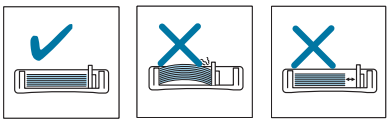

Making Connections

1 Plug one end of the supplied telephone line cord into the **LINE** jack on the machine and the other end into the wall jack.

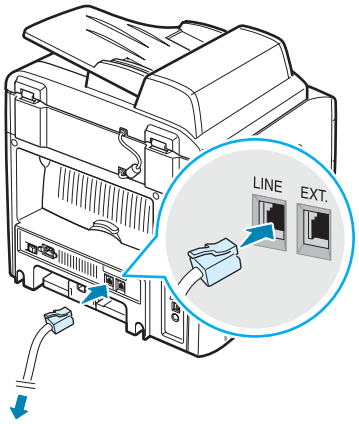

To the wall jack

If you want to use your machine to receive both faxes and voice calls, you will need to connect a telephone and/or answering machine to your machine.

Plug your extension phone or answering machine card into the **EXT** jack, as shown below.

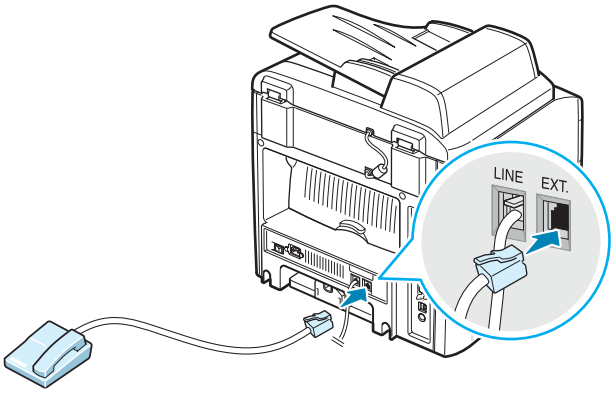

To an extension phone or answering machine

UK users should plug the cord of the extension phone into the supplied TAM lead and plug the cord of the TAM lead into the **EXT** jack on the back of your machine.

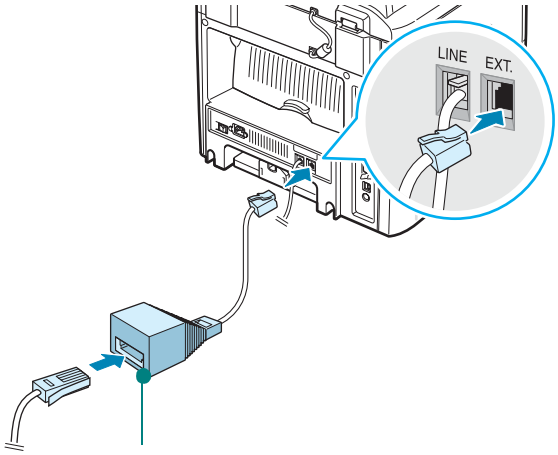

TAM lead
(For UK users only)

NOTES:

- Use the TAM lead and the telephone line cord supplied with your machine.
- In the United Kingdom, if a three-wire type (SHUNT-wire, older equipment) telephone or answering machine is connected to the EXT jack on the machine, the external equipment will fail to ring when receiving an incoming call as the machine is designed to operate with the latest technology. To prevent this incompatibility, use two-wire (newer equipment) telephones or answering machines.

2 Connect a USB cable to the USB connector on your machine. You need to buy a USB 2.0 compliant cable that is within 3 m in length

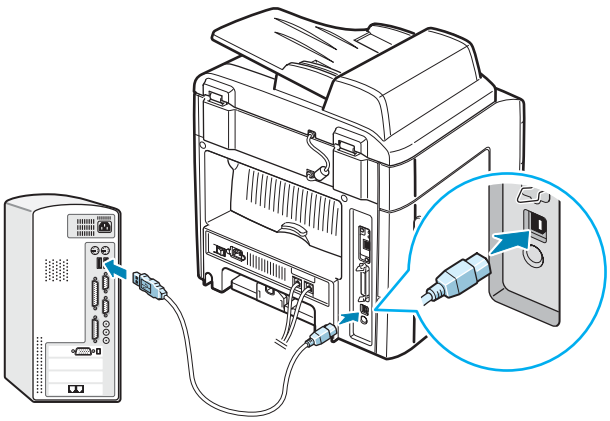

To the USB port on your computer

If you want to use a parallel printer cable, purchase only an IEEE-1284 compliant parallel cable and connect it to the parallel connector on your machine.

Push the metal clips down to fit inside the notches on the cable plug.

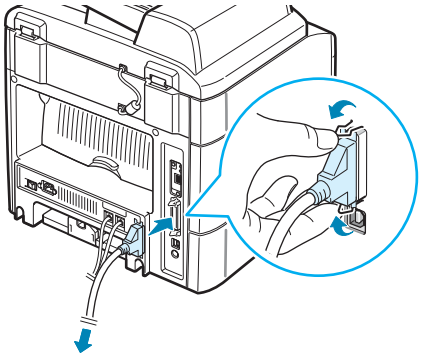

To the parallel port on your computer

NOTES:

- You only need to connect one of the cables mentioned above. Do not use the parallel and the USB cables at the same time.
- If you are using a USB cable, you must be running Windows 98/Me/2000/XP, or Linux.
- The parallel port may not be available depending on your country.

If you want to use a network cable, plug one end of the Ethernet cable (UTP cable with RJ.45 connector) into the Ethernet network port on the machine and the other end of the cable into a network LAN connection.

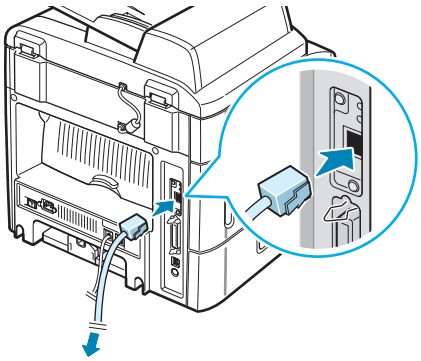

To the network LAN connection

NOTE: You can configure the network parameters using the control panel; see page B.5.

Turning the Machine On

1. Plug one end of the supplied three-pronged electrical cord into the AC socket on the machine and the other end into a properly grounded AC outlet.

2. Press the power switch to turn the machine on. "Warming Up Please Wait" appears on the display indicating that the machine is now on.

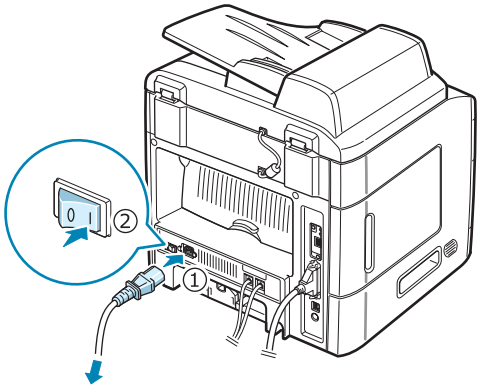

To the AC wall jack

To view your display text in another language, see page 2.15.

CAUTIONS:

- The fuser area inside of the rear door of your machine becomes very hot when in use. Take care not to burn your fingers when you access this area.
- Do not disassemble the machine with power on. If you do, you may receive an electric shock.

Setting Up the Machine System

Changing the Display Language

To change the language that displays on the control panel, follow these steps:

1. Press **Menu** until "Machine Setup" appears on the top line of the display.
2. Press the scroll button (◀ or ▶) until "Language" appears on the bottom line of the display.
3. Press **Enter**. The current setting appears on the bottom line of the display.
4. Press the scroll button (◀ or ▶) until the language you want appears on the display.
5. Press **Enter** to save the selection.
6. To return to Standby mode, press **Stop/Clear**.

Setting the Machine ID

In some countries, you are required by law to indicate your fax number on any fax you send. The Machine ID, containing your telephone number and name (or company name), will be printed at the top of each page sent from your machine.

1. Press **Menu** until "Machine Setup" appears on the top line of the display. The first available menu item, "Machine ID," displays on the bottom line.

2. Press **Enter**. The display asks you to enter the fax number.

   If there is a number already set, the number appears.

3. Enter your fax number using the number keypad.

NOTE: If you make a mistake while entering numbers, press the ◀ button to delete the last digit.

4. Press **Enter** when the number on the display is correct. The display asks you to enter an ID.

5. Enter your name or the company name using the number keypad.

   You can enter alphanumeric characters using the number keypad, and include special symbols by pressing the **0** button.

   For details on how to use the number keypad to enter alphanumeric characters, see "Entering Characters Using the Number Keypad" on page 2.17.

   If you want to enter the same letter or number in succession (e.g. SS, AA, 777), enter one digit, move the cursor by pressing the ▶ button and enter the next digit.

   If you want to insert a space in the name, you can also use the ▶ button to move the cursor to skip the position.

6. Press **Enter** when the name on the display is correct.

7. To return to Standby mode, press **Stop/Clear**.

Entering Characters Using the Number Keypad

As you perform various tasks, you need to enter names and numbers. For example, when you set up your machine, you enter your name (or your company's name) and telephone number. When you store one-, two-, or three-digit speed dial or group dial numbers, you may also enter the corresponding names.

To enter alphanumeric characters:

1. When you are prompted to enter a letter, locate the button labeled with the character you want. Press the button until the correct letter appears on the display.

   For example, to enter the letter **O**, press **6**, labeled with "MNO."

   Each time you press **6**, the display shows a different letter, **M**, **N**, **O**, and finally **6**.

   You can enter special characters, such as space, plus sign, and etc.. For details, see "Keypad Letters and Numbers" on page 2.18.

2. To enter additional letters, repeat step 1.

   If the next letter is printed on the same button, move the cursor by pressing the ▶ button and then press the button labeled with the letter you want. The cursor will move to the right and the next letter will appear on the display.

   You can enter a space by pressing **1** twice.

3. When you finish entering letters, press **Enter**.

Keypad Letters and Numbers

Key	Assigned numbers, letters, or characters
1	1 Space
2	A B C 2
3	D E F 3
4	G H I 4
5	J K L 5
6	M N O 6
7	P Q R S 7
8	T U V 8
9	W X Y Z 9
0	+ - , . ` / * # & 0

Changing Numbers or Names

If you make a mistake while entering a number or name, press the ◂ button to delete the last digit or character. Then enter the correct number or character.

Inserting a Pause

With some telephone systems, you must dial an access code (9, for example) and listen for a second dial tone. In such cases, you must insert a pause in the telephone number. You can insert a pause while you are setting up one-touch or speed dial numbers.

To insert a pause, press **Redial/Pause** at the appropriate place while entering the telephone number. A "–" appears on the display at the corresponding location.

Setting the Date and Time

The current date and time are shown on the display when your machine is on and ready to work. This machine, all of your faxes will have the date and time printed on them.

NOTE: When turning on the machine after turning it off for a long time, you need to reset date and time.

1. Press **Menu** until "Machine Setup" appears on the top line of the display.

2. Press the scroll button (◀ or ▶) to display "Date & Time" on the bottom line and press **Enter**.

3. Enter the correct time and date using the number keypad.

Month	= 01 ~ 12
Day	= 01 ~ 31
Year	= requires four digits
Hour	= 01 ~ 12 (12-hour mode) 00 ~ 23 (24-hour mode)
Minute	= 00 ~ 59

NOTE: The date format may differ from country to country.

You can also use the scroll button (◀ or ▶) to move the cursor under the digit you want to correct and enter a new number.

4. To select "AM" or "PM" for 12-hour format, press the * or # button or any number button.

   When the cursor is not under the AM or PM indicator, pressing the * or # button immediately moves the cursor to the indicator.

   You can change the clock mode to 24-hour format (e.g. 01:00 PM as 13:00). For details, see page 2.20.

5. Press **Enter** when the time and date on the display is correct.

   When you enter a wrong number, the machine beeps and does not proceed to the next step. If this happens, just reenter the correct number.

Changing the Clock Mode

You can set your machine to display the current time using either a 12-hour or 24-hour format.

1. Press **Menu** until "Machine Setup" appears on the top line of the display.

2. Press the scroll button (◀ or ▶) until you see "Clock Mode" on the bottom line and press **Enter**.

   The clock mode currently set for the machine displays.

3. Press the scroll button (◀ or ▶) to select the other mode and then press **Enter** to save the selection.

4. To return to Standby mode, press **Stop/Clear**.

Setting the Paper Size and Type

After loading paper in the paper tray, the standard Tray1, Multipurpose tray, or optional Tray2, you need to set the paper size and type using the control panel buttons. These settings will apply to copy and fax modes. For PC-printing, you need to select the paper size and type in the application program you use on your PC.

1. Press **Menu**.

   The display shows "Paper Setting" on the top line of the display.

2. Press the scroll button (◀ or ▶) to display "Paper Size" on the bottom line and press **Enter** to access the menu item.

   The first item, "Tray Paper," displays on the bottom line.

   If the optional Tray 2 is installed, "Tray1 Size" displays on the bottom line.

3. Use the scroll button (◀ or ▶) to select the paper tray you want to use and press **Enter**.

4. Use the scroll button (◀ or ▶) to find the paper size you are using and press **Enter** to save it.

5. Press **Upper Level**.

6 Press the ▸ button to scroll to "Paper Type" and press **Enter** to access the menu item.

7 Use the scroll button (◂ or ▸) to find the paper type you are using and press **Enter** to save it.

8 To return to Standby mode, press **Stop/Clear**.

Setting Sounds

You can control the following sounds:

- Speaker: You can turn on or off the sounds from the telephone line through the speaker, such as the dial tone or a fax tone. With this option set to "Comm." the speaker is on until the remote machine answers.
- Ringer: You can adjust the ringer volume.
- Key Sound: With this option set to "On" a key tone sounds each time a key is pressed.
- Alarm Sound: You can turn the alarm sound on or off. With this option set to "On" an alarm tone sounds when an error occurs or fax communication ends.
- You can adjust the volume level using the **On Hook Dial** button.

Speaker, Ringer, Key Sound, and Alarm Sound

1 Press **Menu** until "Sound/Volume" appears on the top line of the display.

2 Press the scroll button (◂ or ▸) to scroll through the options. Press **Enter** when you see the desired sound option.

3 Press the scroll button (◂ or ▸) to display the desired status or volume for the option you have selected.

You will see the selection on the bottom line of the display.

For the ringer volume, you can select "Off," "Low," "Med," and "High." Setting "Off" means that the ringer does not sound. The machine works normally even if the ringer is turned off.

4 Press **Enter** to save the selection. The next sound option appears.

5 If necessary, repeat steps 2 through 4.

6 To return to Standby mode, press **Stop/Clear**.

Speaker Volume

1 Press **On Hook Dial**. A dial tone sounds from the speaker.

2 Press the scroll button (◀ or ▶) until you hear the volume you want. The display shows the current volume level.

3 Press **On Hook Dial** to save the change and return to Standby mode.

NOTE: You can adjust the speaker volume only when the telephone line is connected.

Using the Save Modes

Toner Save Mode

Toner Save mode allows your machine to use less toner on each page. Activating this mode extends the life of the toner cartridge beyond what one would experience in the normal mode, but it reduces print quality.

To turn the toner save mode on or off, press **Toner Save**.

- If the button backlight is on, the mode is active and the machine uses less toner when printing a document.
- If the button backlight is off, the mode is deactivated and the machine prints with the normal quantity of toner.

NOTE: When PC-printing, you can also turn on or off the toner save mode in the printer properties. See page 4.8.

Toll Save Mode

Using the **Toll Save** button on the control panel, you can quickly set your machine to send the document(s) stored in memory during a preset time slot, when the call charge is lower. This Toll Save mode helps you to take advantage of lower long distance rates at night, for example.

NOTE: The toll-saving time slot may vary depending on your contract with your long distance phone company.

To turn the toll save mode on:

1. Press **Toll Save**. The button backlight turns on.
2. Press **Enter** when "Start Time" displays on the bottom line.
3. Enter the time and date when your machine starts sending toll save faxes, using the number keypad.

   To select "AM" or "PM" for 12-hour format, press the * or # button or any number button.
4. Press **Enter** when the start time and date on the display is correct.

5 Press the scroll button (◀ or ▶) to display "End Time" and press **Enter**.

6 Enter the time and date when the toll save transmission ends, using the number keypad.

7 Press **Enter** to save the setting.

8 To return to Standby mode, press **Stop/Clear**.

Once Toll Save mode is activated, your machine stores into memory all of the documents to be faxed and sends them at the programed time.

To turn Toll Save mode off, press **Toll Save** again. The button backlight turns off and the mode is deactivated.

NOTE: Once the toll-saving time is set, the **Toll Save** button allows you only to enable or disable the toll save mode. To change the time setting, use the **Toll Save** item in the **Advanced Fax** menu. See page 7.37.

Power Save Mode

Power Save mode allows your machine to reduce power consumption when it is not in actual use. You can turn this mode on and select a length of time for which the machine waits after a job is printed before it switches to a reduced power state.

1 Press **Menu** until "Machine Setup" appears on top line of the display.

2 Press the scroll button (◀ or ▶) until "Power Save" appears on the bottom line. Press **Enter**.

3 Press the scroll button (◀ or ▶) to display "On" on the bottom line and press **Enter**.

   Selecting "Off" means that the power save mode is deactivated.

4 Press the scroll button (◀ or ▶) until the time setting you want appears.

   The available options are 5, 10, 15, 30, and 45 (minutes).

5 Press **Enter** to save the selection.

6 To return to Standby mode, press **Stop/Clear**.

Scan Lamp Save Mode

Scan Lamp Save mode allows you to save the scan lamp. The scan lamp under the document glass automatically turns off when it is not in actual use to reduce power consumption and extend the life of the lamp. The lamp automatically wakes up after some warm-up time when you start scanning.

You can set the length of time for which the scan lamp waits after a scan job is completed before it switches to the power save mode.

1. Press **Menu** until "Machine Setup" appears on top line of the display.
2. Press the scroll button (◀ or ▶) until "Scan PWR Save" appears on the bottom line. Press **Enter**.
3. Press the scroll button (◀ or ▶) until the time setting you want appears on the bottom line.

   The available time options are 0.5, 1, 4, 8, and 12 (hours).
4. Press **Enter** to save the selection.
5. To return to Standby mode, press **Stop/Clear**.

Installing Software

About Samsung Software

You must install the printer software using the supplied CD-ROM after you have set up your machine and connected it to your computer. The CD-ROM provides you with the following software:

Programs for Windows

To use your machine as a printer and scanner in Windows, you must install the MFP driver. You can install selectively or all the following components:

- **Printer driver**- Use this driver to take full advantage of your printer's features.
- **Scanner driver**- TWAIN and Windows Image Acquisition (WIA) driver are available for scanning documents on your machine.
- **Printer Settings Utility**- This program is automatically installed when you install the MFP driver. For information about using the program, see page 2.45.
- **SmarThru**- It is the accompanying Windows-based software for your multifunctional machine. Allows you to edit a scanned image in many ways using a powerful image editor and to send the image by e-mail. You can also open another image editor program installed in your Windows, like Adobe PhotoShop, from SmarThru.

  For details, please refer to the onscreen help supplied on the SmarThru program.
- **Set IP**- The Set IP can detect printers in the same network and display the network information.
- **Network Scan driver**- Your machine use the Network Scan program for scanning images. For information about using the program, see page 6.12.

Linux Driver

You can print and scan in Linux using your machine. For information about installing the MFP driver in Linux, see page A.3.

Printer Driver Features

Your printer drivers support the following standard features:

- Paper source selection
- Paper size, orientation and media type
- number of copies

The following table lists a general overview of features supported by your printer drivers.

Feature	PCL 6 Printer Driver	
	Win 98/Me/NT 4.0/ 2000/XP	Linux
Toner Save	Y	Y
Print quality option	Y	Y
Poster printing	Y	N
Multiple pages per sheet (N-up)	Y	Y(2,4)
Fit to page printing	Y	Y
Scale printing	Y	Y
Different source for first page	Y	Y
Watermark	Y	N
Overlay	Y	N
TrueType fonts option	Y	N

Installing Samsung Software in Windows

System Requirements

Before you begin, ensure that your system meets the minimum requirements.

Item	Requirements		Recommended
Operating system	Windows 98/Me/NT 4.0/2000/XP		
CPU	Windows 98/ Me/NT 4.0/2000	Pentium II 400 MHz or higher	Pentium III 933 MHz
	Windows XP	Pentium III 933 MHz or higher	Pentium IV 1 GHz
RAM	Windows 98/ Me/NT 4.0/2000	64 MB or higher	128 MB
	Windows XP	128 MB or higher	256 MB
Free disk space	Windows 98/ Me/NT 4.0/2000	300 MB or higher	1 GB
	Windows XP	1 GB or higher	5 GB
Internet Explorer	5.0 or higher		5.5

NOTE: For Windows NT 4.0/2000/XP, the system administrator should install the software.

Installing Software for Local Printing

A local printer is a printer directly attached to your computer using the printer cable supplied with your printer, such as a USB or parallel cable. If your printer is attached to a network, skip this step and see "Installing Software for Network Printing" on page 2.34.

You can install the printer software using the typical or custom method.

NOTE: If the "New Hardware Wizard" window appears during the installation procedure, click in the upper right corner of the box to close the window, or click **Cancel**.

Typical Installation for local printing

This is recommended for most users. All components (Printer Driver, Scanner Driver, Printer Settings Utility and SmarThru) necessary for printer operations will be installed.

1. Make sure that the printer is connected to your computer and powered on.

2. Insert the supplied CD-ROM into your CD-ROM drive.The CD-ROM should automatically run, and an installation window appears.

   If the installation window does not appear, click **Start** and then **Run**. Type **X:\setup.exe**, replacing "**X**" with the letter which represents your drive and click **OK**.

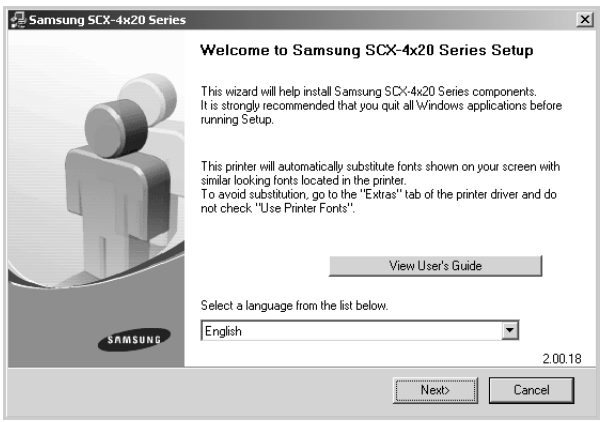

3. Click **Next**.
   - If necessary, select a language from the drop-down list.
   - **View User's Guide**: Allows you to view the User's Guide. If your computer doesn't have Adobe Acrobat, click on this option and it will automatically install Adobe Acrobat Reader for you.

4 Select **Typical installation for a local printer**. Click **Next**.

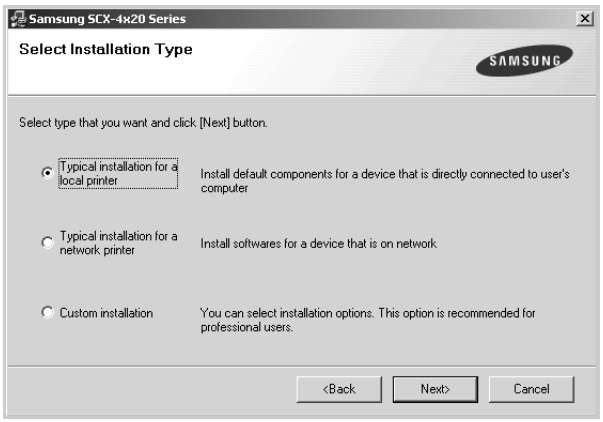

NOTES: If your printer is not already connected to the computer, the following window will appear.

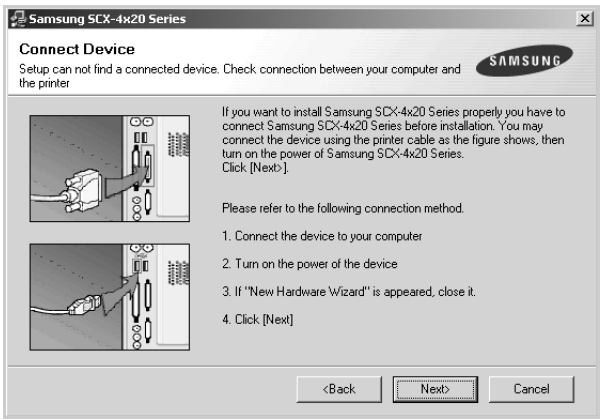

- After connecting the printer, click **Next**.
- If you don't want to connect the printer at this time, click **Next**, and **No** on the following screen. Then the installation will start and a test page will not be printed at the end of the installation.

5 After the installation is finished, a window asking you to print a test page appears. If you choose to print a test page, select the checkbox and click **Next**.

Otherwise, just click **Next** and skip to step 7.

6 If the test page prints out correctly, click **Yes**. If not, click **No** to reprint it.

7 To register yourself as a user of Samsung Printers in order to receive information from Samsung, select the checkbox and click **Finish**. You are now sent to the Samsung web site.

Otherwise, just click **Finish**.

NOTE: After setup is complete, if your printer driver doesn't work properly, reinstall the printer driver. See "Repairing Software" on page 2.41.

Custom Installation for local printing

You can choose individual components to install.

1. Make sure that the printer is connected to your computer and powered on.

2. Insert the supplied CD-ROM into your CD-ROM drive.

   The CD-ROM should automatically run, and an installation window appears.

   If the installation window does not appear, click **Start** and then **Run**. Type **X:\setup.exe**, replacing "**X**" with the letter which represents your drive and click **OK**.

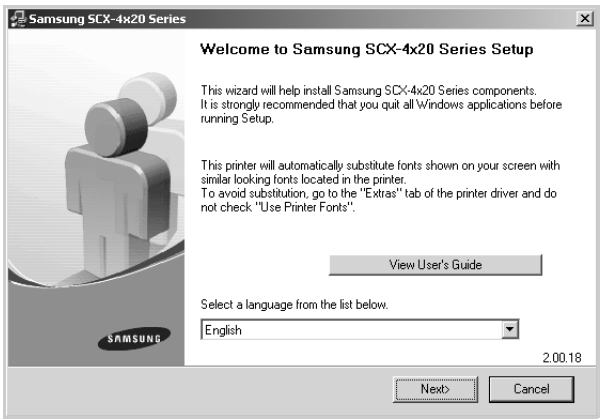

3. Click **Next**.
   - If necessary, select a language from the drop-down list.

- **View User's Guide**: Allows you to view the User's Guide. If your computer doesn't have Adobe Acrobat, click on this option and it will automatically install Adobe Acrobat Reader for you.

4 Select **Custom installation**. Click **Next**.

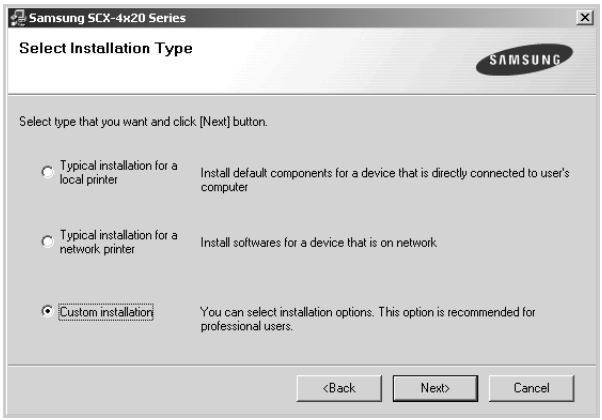

5 Select your local printer and click **Next**.

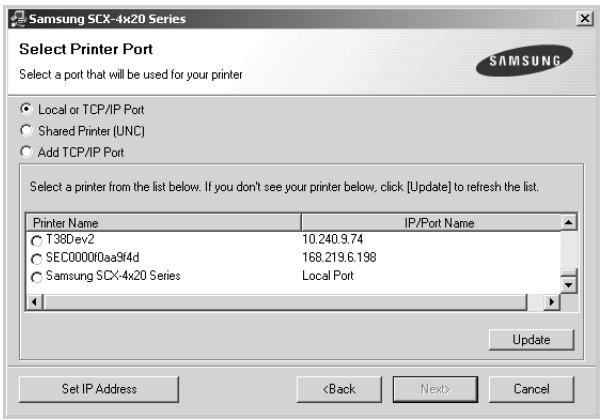

NOTES: If your printer is not already connected to the computer, the following window will appear.

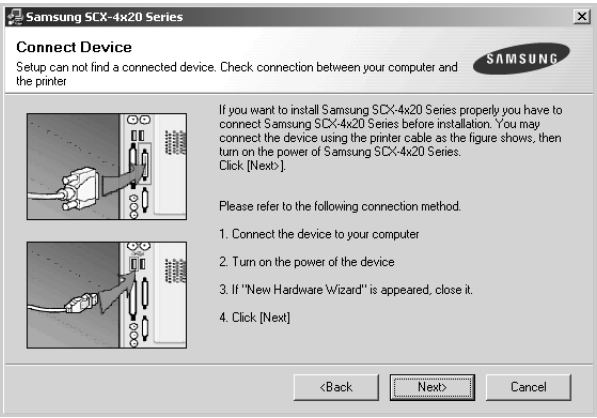

- After connecting the printer, click **Next**.
- If you don't want to connect the printer at this time, click **Next**, and **No** on the following screen. Then the installation will start and a test page will not be printed at the end of the installation.

6 Select the components to be installed and click **Next**.

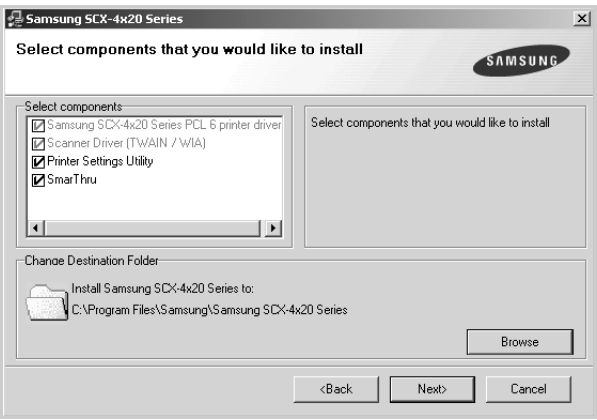

7 After the installation is finished, a window asking you to print a test page appears. If you choose to print a test page, select the checkbox and click **Next**.

Otherwise, just click **Next** and skip to step 9.

8 If the test page prints out correctly, click **Yes**.

If not, click **No** to reprint it.

9 To register yourself as a user of Samsung Printers in order to receive information from Samsung, select the checkbox and click **Finish**. You are now sent to the Samsung web site.

Otherwise, just click **Finish**.

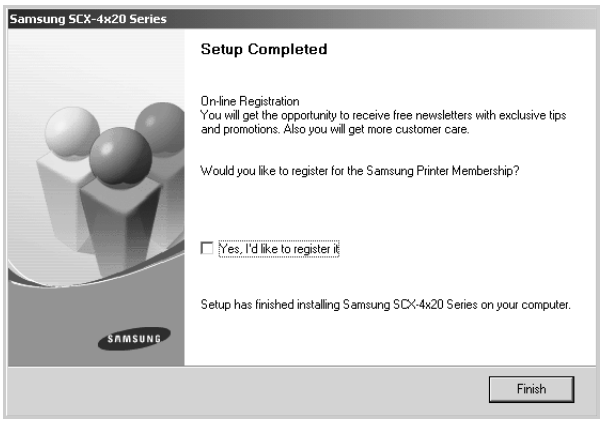

Installing Software for Network Printing

When you connect your printer to a network, you must first configure the TCP/IP settings for the printer. After you have assigned and verified the TCP/IP settings, you are ready to install the software on each computer on the network.

You can install the printer software using the typical or custom method.

Typical Installation for Network Printing

This is recommended for most users. All components (Printer Driver, Scanner Driver, SmarThru, Network Scan and Set IP) necessary for printer operations will be installed.

This is recommended for most users. All components necessary for printer operations will be installed.

1 Make sure that the printer is connected to your network and powered on. For details about connecting to the network, see page 2.13

2 Insert the supplied CD-ROM into your CD-ROM drive.

The CD-ROM should automatically run, and an installation window appears.

If the installation window does not appear, click **Start** and then **Run**. Type **X:\setup.exe**, replacing "**X**" with the letter which represents your drive and click **OK**.

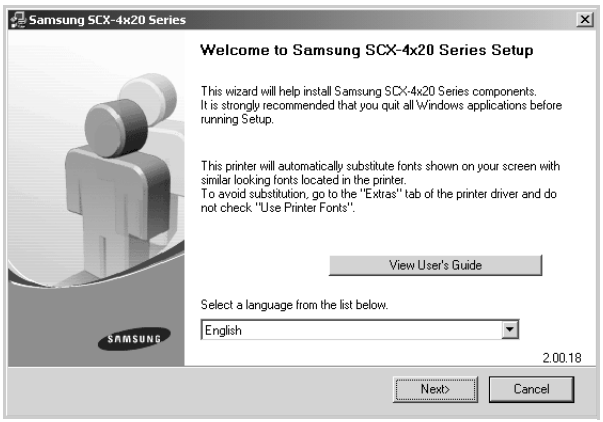

3 Click **Next**.

- If necessary, select a language from the drop-down list.
- **View User's Guide**: Allows you to view the User's Guide. If your computer doesn't have Adobe Acrobat, click on this option and it will automatically install Adobe Acrobat Reader for you.

4 Select **Typical installation for a network printer**. Click **Next**.

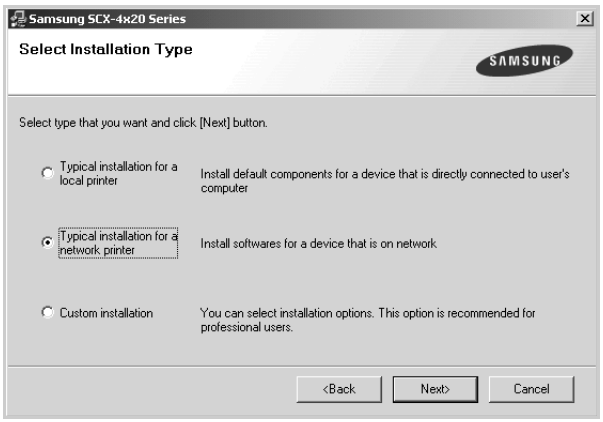

5 The list of printers available on the network appears. Select the printer you want to install from the list and then click **Next**.

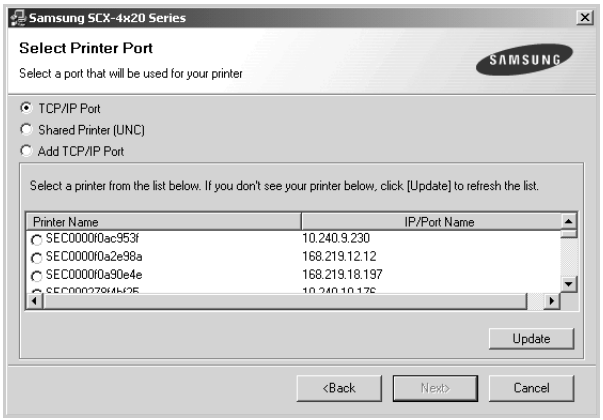

- If you do not see your printer on the list, click **Update** to refresh the list, or select **Add TCP/IP Port** to add your printer to the network. To add the printer to the network, enter the port name and the IP address for the printer.
- To find a shared network printer (UNC Path), select **Shared Printer [UNC]** and enter the shared name manually or find a shared printer by clicking the **Browse** button.

6 After the installation is finished, a window appears asking you to print a test page and to register yourself as a user of Samsung Printers in order to receive information from Samsung. If you so desire, select the corresponding checkbox(es) and click **Finish**.

Otherwise, just click **Finish**.

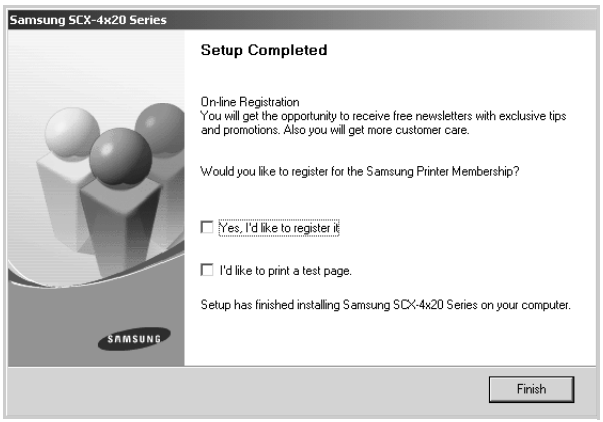

NOTE: After setup is complete, if your printer driver doesn't work properly, reinstall the printer driver. See "Repairing Software" on page 2.41.

Custom Installation for Network Printing

You can choose individual components to install and set a specific IP address.

1 Make sure that the printer is connected to your network and powered on. For details about connecting to the network, see page 2.13.

2 Insert the supplied CD-ROM into your CD-ROM drive.

The CD-ROM should automatically run, and an installation window appears.

If the installation window does not appear, click **Start** and then **Run**. Type **X:\setup.exe**, replacing "**X**" with the letter which represents your drive and click **OK**.

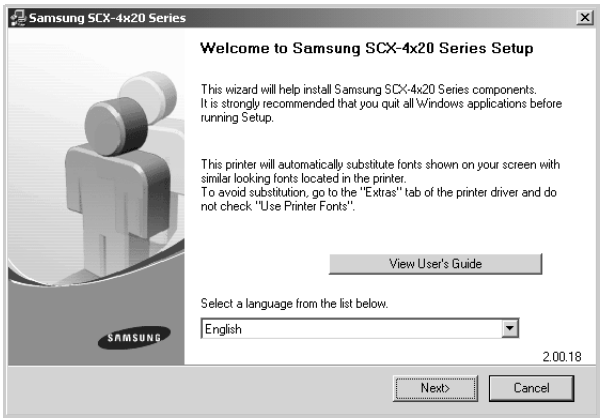

3 Click **Next**.

- If necessary, select a language from the drop-down list.
- **View User's Guide**: Allows you to view the User's Guide. If your computer doesn't have Adobe Acrobat, click on this option and it will automatically install Adobe Acrobat Reader for you.

4 Select **Custom installation**. Click **Next**.

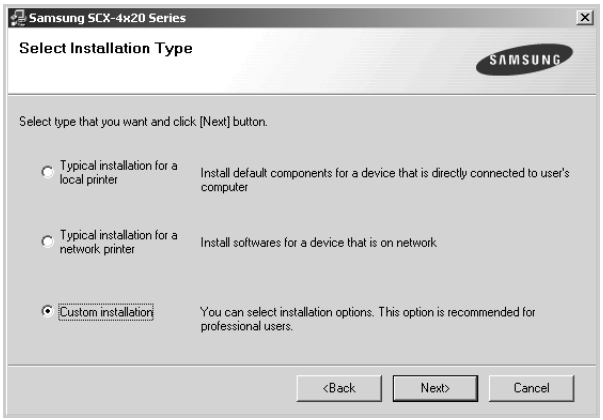

5 The list of printers available on the network appears. Select the printer you want to install from the list and then click **Next**.

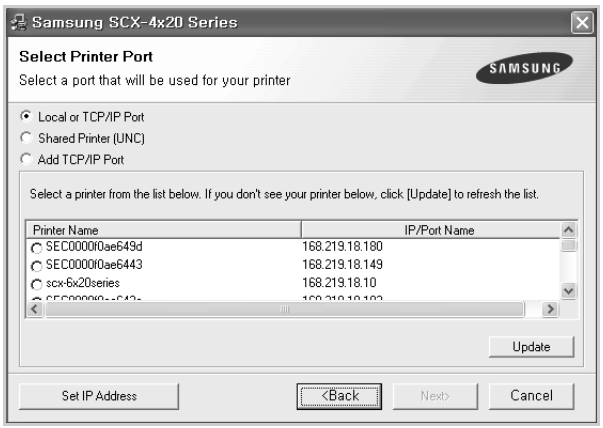

- If you do not see your printer on the list, click **Update** to refresh the list, or select **Add TCP/IP Port** to add your printer to the network. To add the printer to the network, enter the port name and the IP address for the printer.
- To find a shared network printer (UNC Path), select **Shared Printer [UNC]** and enter the shared name manually or find a shared printer by clicking the **Browse** button.

NOTES: If you want to set a specific IP address on a specific network printer, click the **Set IP Address** button. The Set IP Address window appears. Do as follows:

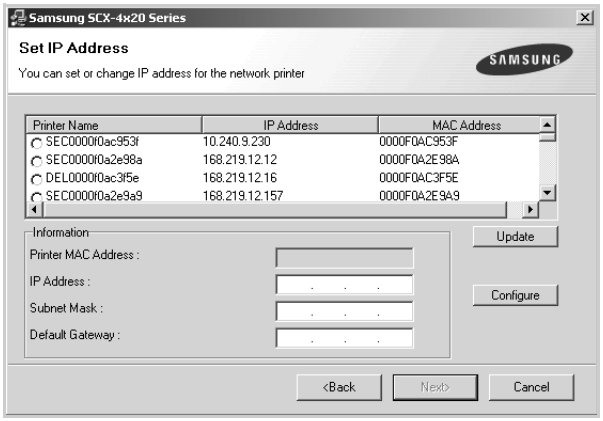

a. Select a printer to be set with a specific IP address from the list.
b. Configure an IP address, subnet mask, and gateway for the printer manually and click **Configure** to set the specific IP address for the network printer.
c. When your computer asks you to confirm your selection, click **Yes**.

6 Select the components to be installed and click **Next**.

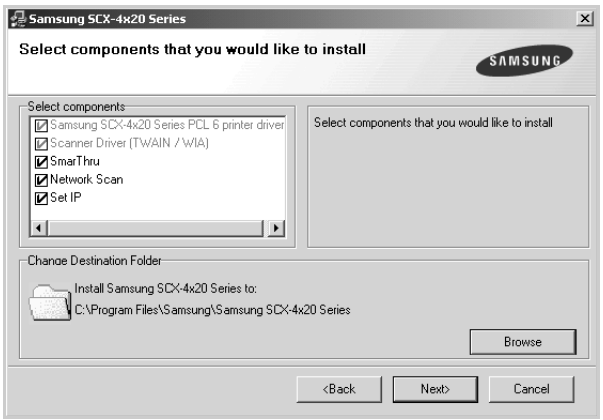

7 After selecting the components, the following window appears. You can also change the printer name, set the printer to be shared on the network, set the printer as the default printer, and change the port name of each printer. Click **Next**.

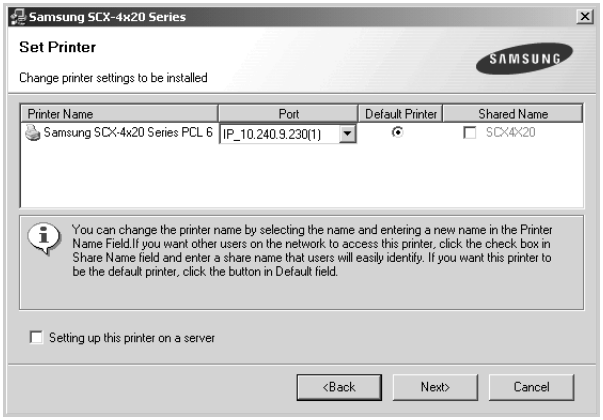

To install this software on a server, select the **Setting up this printer on a server** checkbox.

8 After the installation is finished, a window appears asking you to print a test page and to register yourself as a user of Samsung Printers in order to receive information from Samsung. If you so desire, select the corresponding checkbox(es) and click **Finish**.

Otherwise, just click **Finish**.

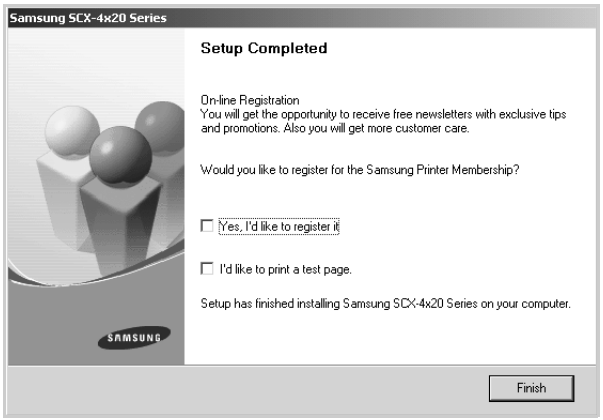

NOTE: After setup is complete, if your printer driver doesn't work properly, reinstall the printer driver. See "Repairing Software" on page 2.41.

Repairing Software

Repair is required if your installation fails or the software does not work properly. This Repair procedure does not physically repair SmarThru and Network Scan software.

1 Start Windows.

2 From the **Start** menu select **Programs** or **All Programs** → **Samsung SCX-4x20 Series** → **Maintenance**.

3 Select **Repair** and click **Next**.

4 The list of printers available on the network appears. Select the printer you want to reinstall from the list and then click **Next**.

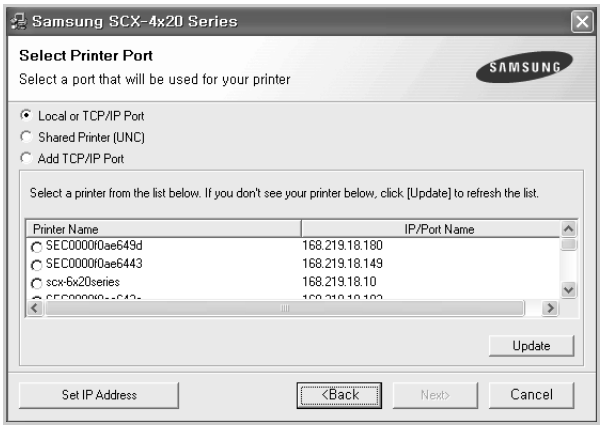

- If you do not see your printer on the list, click **Update** to refresh the list, or select **Add TCP/IP Port** to add your printer to the network. To add the printer to the network, enter the port name and the IP address for the printer.
- To find a shared network printer (UNC Path), select **Shared Printer [UNC]** and enter the shared name manually or find a shared printer by clicking the **Browse** button.

You will see a component list so that you can reinstall any item individually.

NOTES: If your printer is not already connected to the computer, the following window will appear.

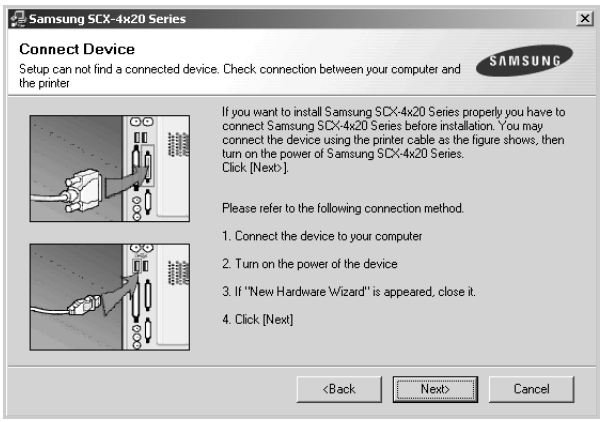

- After connecting the printer, click **Next**.
- If you don't want to connect the printer at this time, click **Next**, and **No** on the following screen. Then the installation will start and a test page will not be printed at the end of the installation.

5 Select the components you want to reinstall and click **Next**.

If you select **Samsung SCX-4x20 Series PCL 6 printer driver**, the window asking you to print a test page appears. Do as follows:

a. To print a test page, select the check box and click **Next**.

b. If the test page prints out correctly, click **Yes**.

If it doesn't, click **No** to reprint it.

6 When the reinstallation is done, click **Finish**.

Removing Software

Uninstall is required if you are upgrading the software or if your installation fails.

Uninstalling the MFP Driver

1. Start Windows.

2. From the **Start** menu select **Programs** or **All Programs**→ **Samsung SCX-4x20 Series** → **Maintenance**.

3. Select **Remove** and then click **Next**.
   Then you will see a component list so that you can remove any of them individually.

   If you want to uninstall the printer driver, check **Samsung SCX-4x20 Series PCL 6 printer driver**.

   If you want to uninstall the Scanner driver, select **Scanner Driver (TWAIN/WIA)**.

   If you want to uninstall the Printer Settings Utility, check **Printer Settings Utility**.

   If you want to uninstall the Set IP, check **Set IP**.

4. Select the components you want to remove and then click **Next**.

5. When your computer asks you to confirm your selection, click **Yes**.

   The selected driver and all of its components are removed from your computer.

6. After the software is removed, click **Finish**.

Uninstalling the SmarThru

NOTE: Before beginning uninstallation, ensure that all applications are closed on your computer. A system reboot is required after the software is uninstalled.

1. From the **Start** menu, select **Programs**.
2. Select **SmarThru 4**, and then select **Uninstall SmarThru 4**.
3. When your computer asks you to confirm, click **OK**.
4. Click **Finish**.

   You may be prompted to restart your computer. In this case you must shut the computer down and then restart it before the changes will be saved.

Uninstalling the Network Scan Driver

1. Start Windows.
2. From the **Start** menu select **Programs** or **All Programs** → **Samsung Network Printer Utilities** → **Network Scan** → **Uninstall Network Scan**.
3. When your computer asks you to confirm, click **OK**.
4. Click **Finish**.

Using the Printer Settings Utility

Using Printer Settings Utility, you can create and edit Phonebook entries from your computer and set up print and scan system data options. You can also configure the destination launches when you use the **Scan-to** button on the control panel, and update the firmware of the machine.

When you install the Samsung software, the Printer Settings Utility program is automatically installed.

For information about installing the Samsung software, see page 2.29.

To open the Printer Settings Utility:

1. Start your Windows.

2. Click the **Start** button on your desktop computer.

3. From **Programs**, select **Samsung SCX-4x20 Series** and then **Printer Settings Utility**.

   The Printer Settings Utility window opens.

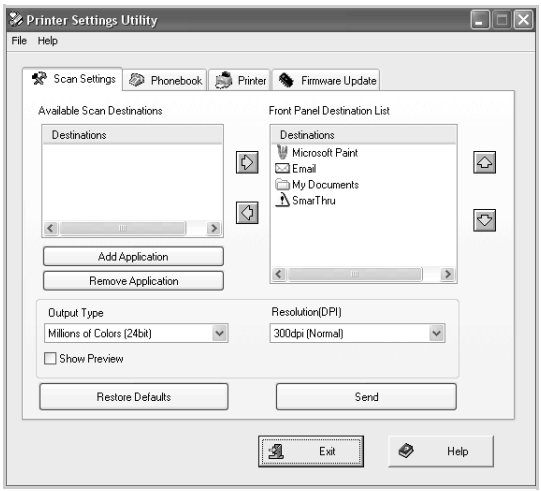

4. The Printer Settings Utility window provides the following tabs: **Scan Settings**, **Phonebook**, **Printer**, and **Firmware Update**.

   To exit, click the **Exit** button at the bottom of each tab.

   For further details, click the **Help** button at the bottom of each tab.

The Scan Settings Tab

Click the **Scan Settings** tab to configure the scan destination list that appears on the control panel display when you press **Scan-to** on the control panel. Using the destination list, you can select a software program that an image can be scanned to.

You can also configure the scan settings, such as the output type and resolution.

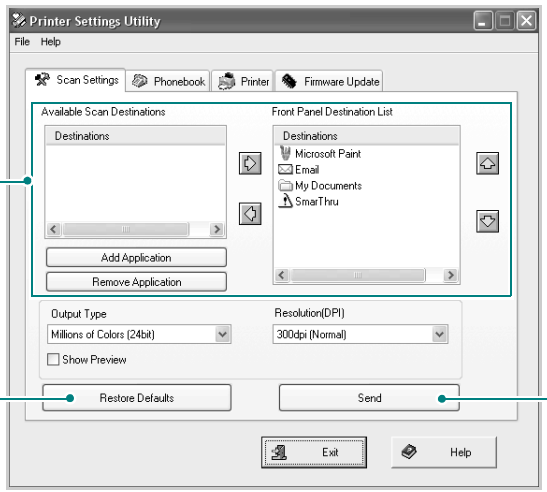

Select the program you want from the Available Scan Destinations and click ⇨ to add it to the Front Panel Destination List. To delete the selected program, click ⇦.

Click to restore the default settings.

Downloads the settings made in the Printer Settings Utility to your machine.

The Phonebook Tab

Click the **Phonebook** tab to create and edit Phonebook entries.

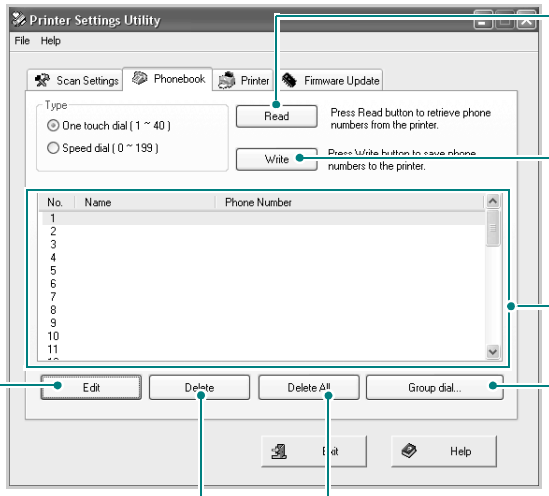

Reads the Phonebook entries from the machine to the Printer Settings Utility.

Downloads the Phonebook entries from the Printer Settings Utility to the machine.

Phonebook entries

Allows you to edit a selected Phonebook entry in a separate Edit window.

Allows you to set up group dial numbers. See page 2.47.

Deletes a selected Phonebook entry.

Deletes all Phonebook entries.

When you click **Group dial**, the following window opens.

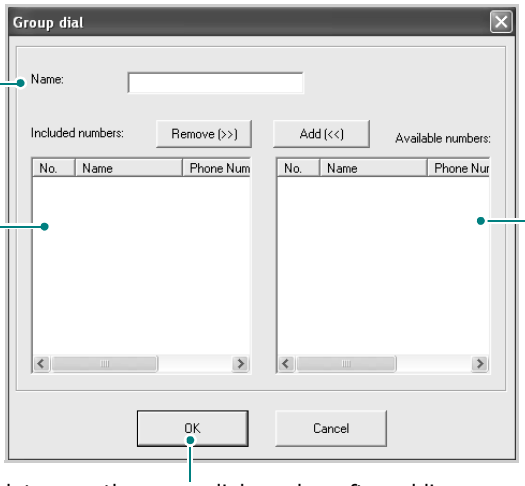

Enter a name for the group.

Shows the numbers included in the group. To remove a number, select it and click **Remove**.

Shows the Phonebook entries you can include in the group. After selecting a number, click **Add** to move it to the Included numbers list.

Click to save the group dial number after adding or removing numbers for the group.

The Printer Tab

Click the **Printer** tab to configure print system settings.

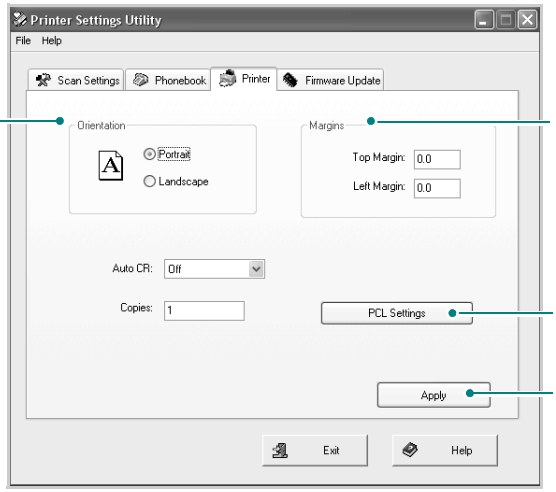

Allows you to select the default orientation of print image on the page.

Allows you to set the margin of print materials.

Allows you to set the PCL emulation configuration.

Downloads the settings made in the Printer Settings Utility to your machine.

The Firmware Update Tab

Click the **Firmware Update** tab to update the firmware of your machine. This feature should be used by an authorized technician. Please consult with the purchase point.

3 PAPER HANDLING

This chapter introduces you to the basics of selecting print materials and loading them into your machine.

This chapter includes:

- **Selecting Print Materials**
- **Loading Paper**
- **Selecting an Output Location**

Selecting Print Materials

You can print on a variety of print materials, such as plain paper, envelopes, labels, transparencies, and etc.. Always use print materials that meet the guidelines for use with this machine. See "Paper Specifications" on page D.6. To get the best possible print quality, use only high-quality copier-grade paper.

When you choose print materials, consider the following:

- Desired outcome: The paper you choose should be appropriate for your project.
- Size: You can use any size paper that fits easily within the paper adjusters of the paper tray.
- Weight: Your machine supports paper weights as follows:
  - 16 ~ 24 lb (60 ~ 90 g/m^2) bond for the standard paper tray (Tray 1) and optional paper tray (Tray 2)
  - 16 ~ 43 lb (60 ~ 163 g/m^2) bond for the Multipurpose tray
- Brightness: Some papers are whiter than others and produce sharper, more vibrant images.
- Surface smoothness: The smoothness of the paper affects how crisp the printing looks on the paper.

CAUTION: Using print materials that does not conform to the specifications listed on page D.9 may cause problems that may require service. This service is not covered by the warranty or service agreements.

Paper Type, Input Sources, and Capacities

Paper Type	Input Source/Capacity*		
	Tray 1	Optional Tray 2	Multipurpose tray
Plain paper	250	250	50
Envelopes	-	-	5
Labels**	-	-	5
Transparencies**	-	-	5
Card stock**	-	-	5

* Maximum capacity may differ depending on media weight, thickness, and environmental conditions.

**If you experience excessive jamming, load one sheet at a time through the Multipurpose tray.

Guidelines for Paper and Special Materials

When selecting or loading paper, envelopes, or other special material, keep these guidelines in mind:

- Always use paper and other materials that conform with the specifications listed under "Paper Specifications" on page D.6.
- Attempting to print on damp, curled, wrinkled, or torn paper can cause paper jams and poor print quality.
- Use only high quality copier grade paper for the best print quality.
- Avoid paper with embossed lettering, perforations, or a texture that is too smooth or too rough. Paper jams may occur.
- Store paper in its ream wrapper until you are ready to use. Place cartons on pallets or shelves, not on the floor. Do not place heavy objects on top of the paper, whether it is packaged or unpackaged. Keep it away from moisture, or other conditions that can cause it to wrinkle or curl.
- Store unused materials at temperatures between 15 °C and 30 °C (59 °F to 86 °F). The relative humidity should be between 10 % and 70 %.
- During storage, you should use a moisture-proof wrap, such as a plastic container or bag, to prevent dust and moisture from contaminating your paper.
- Load special paper types one sheet at a time through the Multipurpose tray to avoid paper jams.
- Only use materials specifically recommended for use in laser printers.
- To prevent special materials, such as transparencies and label sheets from sticking together, remove them as they print out.
- For envelopes:
  - Use only well-constructed envelopes with sharp and well creased folds.
  - Do not use envelopes with clasps and snaps.
  - Do not use envelopes with windows, coated lining, self-adhesive seals, or other synthetic materials.
  - Do not use damaged or poorly made envelopes.
- For transparencies:
  - Place them on a flat surface after removing them from the machine.

- Do not leave them in the paper tray for long periods of time. Dust and dirt may accumulate on them, resulting in spotty printing.
- To avoid smudging caused by fingerprints, handle them carefully.
- To avoid fading, do not expose printed transparencies to prolonged sunlight.

• For labels:

- Verify that their adhesive material can tolerate a fusing temperature of 200 °C (392 °F) for 0.1 second.
- Make sure that there is no exposed adhesive material between them. Exposed areas can cause labels to peel off during printing, which can cause paper jams. Exposed adhesive can also cause damage to machine components.
- Do not load a sheet of them through the machine more than once. The adhesive backing is designed for one pass through the machine.
- Do not use labels that are separating from the backing sheet or are wrinkled, bubbled or otherwise damaged.

• Do not use **Carbonless** paper and **Tracing** paper. Use of these types of paper could result in chemical smells and could damage your machine.

Loading Paper

In the Standard Tray

Load the print material you use for the majority of your print jobs in the standard tray.

The standard tray can hold a maximum of 250 sheets of 20 lb plain paper.

You can purchase an optional paper tray (Tray 2) and attach it below the standard tray to load an additional 250 sheets of paper. See page C.5 for more information about installing the optional Tray 2.

The paper level indicator on the front of the paper tray shows the amount of paper currently left in the tray. When the tray is empty, the indicator of the bar is completely lowered.

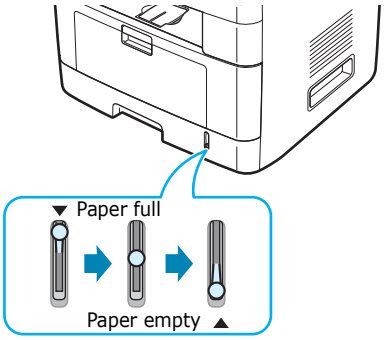

To load paper, pull open the paper tray and load paper with the side to be printed on face down.

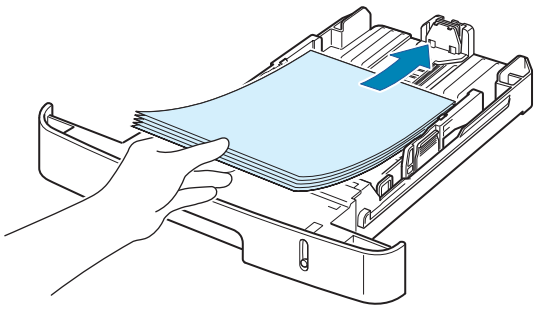

You can load letterhead paper with the design side face down. The top edge of the sheet with the logo should be placed at the front of the tray.

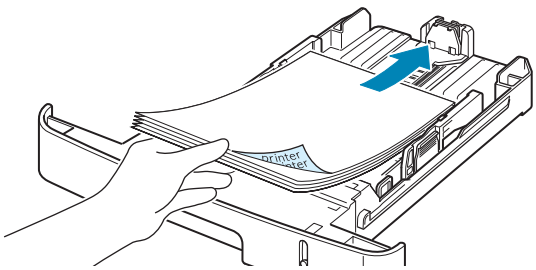

For details about loading paper in the paper tray, see "Loading Paper" on page 2.7.

NOTES:

- If you experience problems with paper feed, place one sheet at a time in the Multipurpose tray.
- You can load up to 150 sheets of previously printed paper. The printed side should be facing up with an uncurled edge at the front. If you experience problems with paper feed, turn the paper around. Note that the print quality is not guaranteed.

In the Multipurpose Tray

The Multipurpose tray can hold several sizes and types of print material, such as transparencies, postcards, note cards, and envelopes. It is useful for single page printing on letterhead or colored paper. You can load approximately 50 sheets of plain paper, 5 envelopes, 5 transparencies, 5 sheets of card stock, or 5 labels at a time.

To load print material in the Multipurpose tray:

1. Lower the Multipurpose tray and unfold the paper support extension, as shown.

2. If you are using paper, flex or fan the edge of the paper stack to separate the pages before loading.

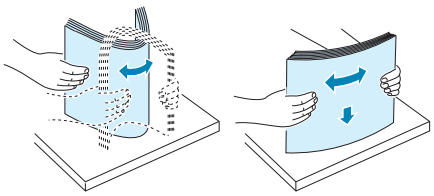

For transparencies, hold them by the edges and avoid touching the print side. Oils from your fingers can cause print quality problems.

3 Load the print material **with the side to be printed on facing up**.

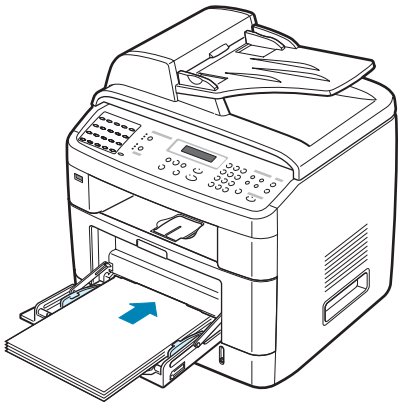

For envelopes, load them with the flap side down and with the stamp area on the top left side.

NOTES:

- If envelopes jam while printing, try reducing the number of envelopes in the Multipurpose tray.
- If you want to print on previously printed paper from the Multipurpose tray, the printed side should be facing down with an uncurled edge toward the machine. If you experience problems with the paper feeding, turn the paper around.

4 Squeeze the width guide and adjust it to the width of the print material without bending it.

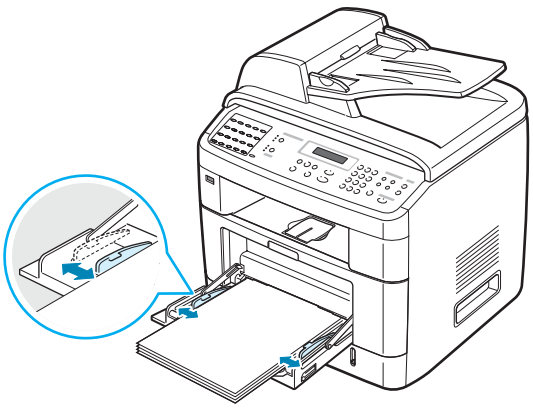

5 After loading paper, you need to set the paper type and size for the Multipurpose tray. See page 2.20 for copying and faxing or page 4.6 for PC-printing.

NOTE: The settings made from the printer driver override the settings on the control panel.

6 If you want the machine to stack the printed pages on the rear output slot, open the rear door to use the rear output slot.

CAUTION: Make sure to open the rear output slot when you print on transparencies. If not, they may tear while exiting the machine.

7 After printing, fold away the paper support extension and close the Multipurpose tray.

Using the Manual Feed Mode

You can manually load a sheet of print material in the Multipurpose tray if you select **Manual Feed** in the **Source** option from the **Paper** tab when you change print settings to print a document. For details about changing print settings, see page 4.6. Manually loading paper can be helpful when you want to check the print quality after each page is printed.

This loading procedure is almost the same as the procedure for loading in the Multipurpose tray, except you load paper sheet-by-sheet in the tray, send print data to print the first page, and press **Enter** on the control panel to print each following page.

1 Lower the Multipurpose tray and unfold the paper support extension.

2 Load a sheet of print material **with the side to be printed on facing up**.

3 Squeeze the width guide and adjust it to the width of the print material without bending it.

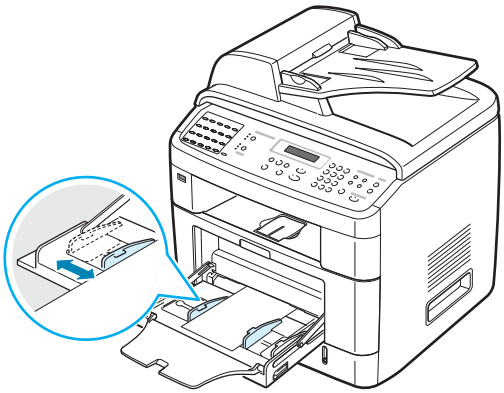

4 If you want the machine to stack the printed pages on the rear output slot, open the rear door to use the rear output slot.

CAUTION: Make sure to open the rear output slot when you print on transparencies. If not, they may tear while exiting the machine.

5 After printing, fold away the paper support extension and close the Multipurpose tray.

Tips on Using the Multipurpose Tray

- Load only one size of print material at a time in the Multipurpose tray.
- To prevent paper jams, do not add paper when there is still paper in the Multipurpose tray. This also applies to other types of print materials.
- Print materials should be loaded face up with the top edge going into the Multipurpose tray first and be placed in the center of the tray.
- Always load only the print materials specified in the Specifications on page D.6 to avoid paper jams and print quality problems.
- Flatten any curl on postcards, envelopes, and labels before loading them into the Multipurpose tray.
- When you print on 76 mm x 127 mm (3 x 5 in.) sized media on the Multipurpose tray, open the rear door to use the rear output slot.
- Make sure to open the rear door when you print on transparencies. If not, they may tear while exiting the machine.
- If you experience jams with card stock feeding, turn the paper around the tray again.

Selecting an Output Location

The machine has two output locations: the rear output slot (face up) and the front output tray (face down).

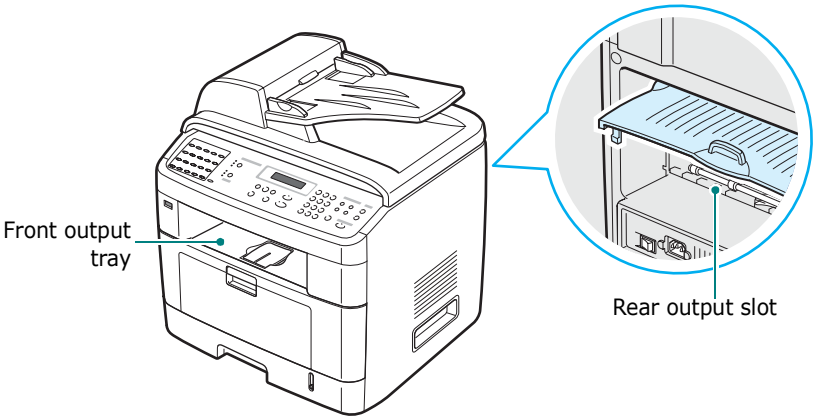

To use the front output tray, make sure that the rear door is closed. To use the rear output slot, open the rear door.

NOTES:

- If paper coming out of the front output tray has problems, such as excessive curl, try printing to the rear output slot.
- To avoid paper jams, do not open or close the rear door while the machine is printing.

Printing to the Front Output Tray *(Face down)*

The front output tray collects printed paper face down, in the order in which the sheets were printed. The tray should be used for most print jobs.

Printing to the Rear Output Slot *(Face up)*

Using the rear output slot, paper comes out of the machine face up.

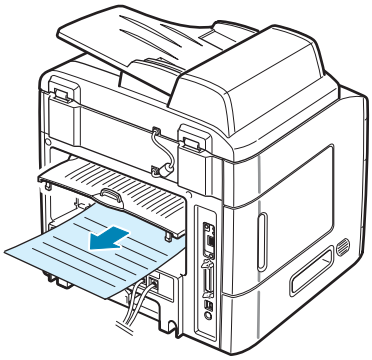

Printing from the Multipurpose tray to the rear output slot provides a **straight paper path**. Using the rear output slot might improve the output quality with the following:

- envelopes
- labels
- small custom-sized paper
- postcards
- transparencies

To use the rear output slot:

1 Open the rear door by pulling it upward.

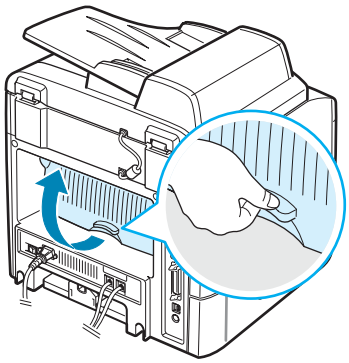

CAUTION: The fuser area inside the rear door of your machine becomes very hot when in use. Take care not to burn your fingers when you access this area.

2 If you do not want to stack the printed pages on the rear output slot, close the rear door. The pages stack on the front output tray.

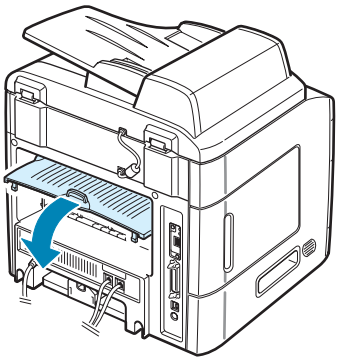

4 PRINTING TASKS

This chapter explains how to print your documents in Windows and how to use the print settings.

This chapter includes:

- **Printing a Document in Windows**
- **Printer Settings**
- **Printing Multiple Pages on One Sheet of Paper**
- **Printing Posters**
- **Fitting Your Document to a Selected Paper Size**
- **Printing a Reduced or Enlarged Document**
- **Using Watermarks**
- **Using Overlays**

Printing a Document in Windows

The following procedure describes the general steps required for printing from various Windows applications. The exact steps for printing a document may vary depending on the application program you are using. Refer to the User's Guide of your software application for the exact printing procedure.

NOTE: For detailed information about printing from a Linux system, see Appendix A.

1 Open the document you want to print.

2 Select **Print** from the **File** menu. The Print window opens. It may look slightly different depending on your application.

You can select the basic print settings within the Print window. These settings include the number of copies and the print range.

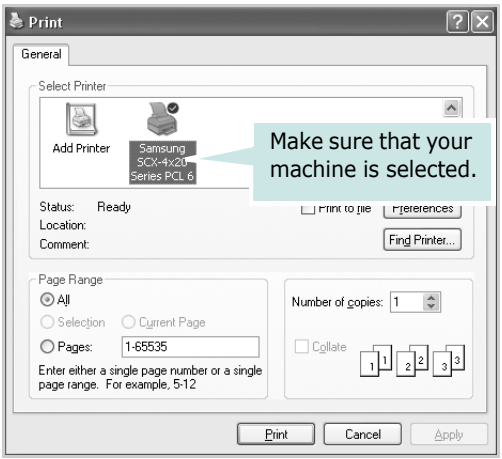

▲ Windows XP

3 To take advantage of the printer features provided by your machine, click **Properties** or **Preferences** in the application's Print window. Go to step 4.

If you see a **Setup**, **Printer**, or **Options** button in your Print window, click it instead. Then click **Properties** on the next screen.

4 Click **OK** to close the printer properties window.

5 To start the print job, click **OK** or **Print** in the Print window.

Canceling a Print Job

There are two ways to cancel a print job:

To stop a print job from the control panel:

Press the **Stop/Clear** button.

Your machine finishes printing the page that is moving through the machine and deletes the rest of the print job. Pressing the button cancels only the current job. If more than one print job is in the machine's memory, you need to press the button once for each job.

To stop a print job from the Printers folder:

If the print job is waiting in a print queue or print spooler, such as the Printer group in Windows, delete the job as follows:

1. Click the Windows **Start** menu.
2. For Windows 98/NT4.0/2000/Me, select **Settings** and then **Printers**.

   For Windows XP, select **Printers and Faxes**.
3. Double-click the **Samsung SCX-4x20 Series PCL 6** icon.
4. From the **Document** menu:

   For Windows 98/Me, select **Cancel Printing**.

   For Windows NT4.0/2000/XP, select **Cancel**.

NOTE: You can access this window simply by double-clicking the machine icon at the bottom right corner of the Windows desktop.

Printer Settings

You can use the Samsung SCX-4x20 Series printer properties window, which allows you to access all of the printer options you need when using your machine. When the printer properties are displayed, you can review and change whatever settings are needed for your print job.

The printer's properties window may differ, depending on your operating system. This User's Guide shows the Printing Preferences window for Windows XP.

Your printer's Printing Preferences window consists of 5 tabs: **Layout**, **Paper**, **Graphics**, **Extras**, and **About**.

If you access printer properties through the **Printers** folder, you can view additional Windows-based tabs (refer to your Windows User's Guide) and the **Printer** tab (see page 4.11).

NOTES:

- Most Windows applications will override the settings you specify in the printer driver. Change all of the print settings available in the software application first, and change any remaining settings using the printer driver.
- The settings you change remain in effect only while you are using the current program. To make your changes permanent, make them in the **Printers** folder. Follow this procedure:
  1. Click the Windows **Start** menu.
  2. For Windows 98/Me/NT 4.0/2000, select **Settings** and then **Printers**.

     For Windows XP, select **Printers and Faxes**.
  3. Select the **Samsung SCX-4x20 Series PCL 6** machine icon.
  4. Click the right mouse button on the printer icon and:
     - In Windows 98/Me, select **Properties**.
     - In Windows 2000/XP, select **Printing Preferences**.
     - In Windows NT 4.0, select **Document Default**.
  5. Change the settings on each tab, and click **OK**.

Layout tab

The **Layout** tab provides options to adjust how the document appears on the printed page. The **Layout Options** includes **Multiple Pages per Side** and **Poster**. See page 4.2 for more information on accessing printer properties.

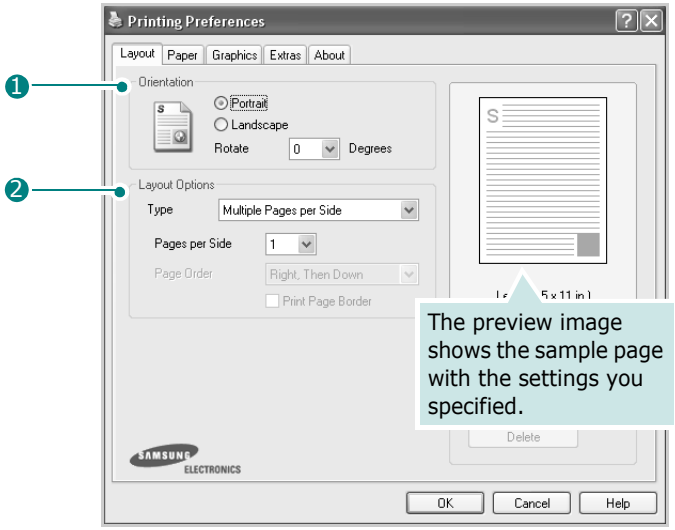

Property	Description
❶ **Orientation**	**Orientation** allows you to select the direction in which information is printed on a page. • **Portrait** prints across the width of the page, letter style. • **Landscape** prints across the length of the page, spreadsheet style. If you want to turn the page upside down, select **Rotate 180 Degrees**. ▲ portrait ▲ Landscape
❷ **Layout Options**	**Layout Options** allows you to select advanced printing options. For details, see page 4.13~4.14.

Paper Tab

Use the following options for paper handling. See page 4.2 for more information about accessing printer properties.

Click the **Paper** tab to access many paper properties.

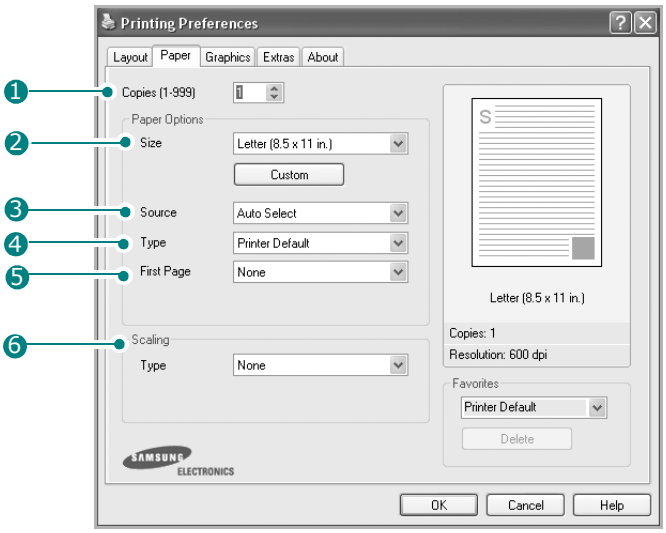

Property	Description
❶ **Copies**	**Copies** allows you to choose the number of copies to be printed. You can enter up to 999.
❷ **Size**	**Size** allows you to choose the size of the paper loaded in the tray. If the required size is not listed in the Size box, click **Custom**. When the Custom Page Size window appears, set the size and click **OK**. The setting appears on the list so that you can select it. 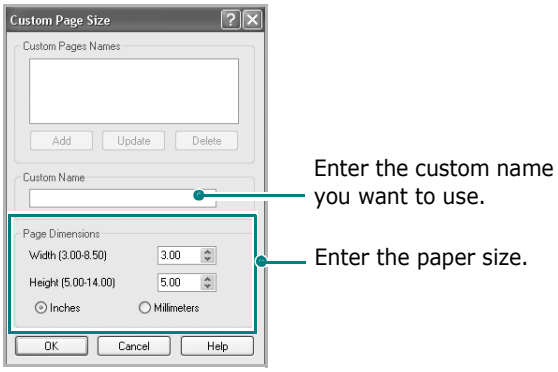

Property	Description
❸ **Source**	Make sure that **Source** is set to the appropriate paper tray. Use the **Manual Feed** source when printing to special material. You need to load one sheet at a time into the Multipurpose tray. See page 3.8. If you install an optional Tray 2 and set the Tray 2 in printer properties (see page C.7), you can select **Tray2**. If the paper source is set to **Auto Select**, the machine automatically picks up print material in the following order: the Multipurpose tray, Tray 1, and optional Tray 2.
❹ **Type**	Make sure that **Type** is set to **Printer Default**. If you load a different type of print material, select the corresponding paper type. For more information about print materials, see Chapter 3, Paper Handling. If you use cotton paper, set the paper type to **Thick** for the best printing. To use recycled paper, which weighs from 75g/m^2 to 90g/m^2 (20lb to 24lb), or colored paper, select **Color Paper**.
❺ **First Page**	This property allows you to print the first page using a different paper type from the rest of the document. You can select the paper source for the first page. For example, load thick stock for the first page into the Multipurpose tray, and plain paper into Tray1. Then, select **Tray1** in the **Source** option and **Multi-Purpose Tray** in the **First Page** option.
❻ **Scaling**	**Scaling** allows you to automatically or manually scale your print job on a page. You can choose from **None**, **Fit to Page**, and **Reduce/Enlarge**. For details, see page 4.16~4.17.

Graphic Tab

Use the following options to adjust the print quality for your specific printing needs. See page 4.2 for more information about accessing printer properties.

Click the **Graphics** tab to display the properties shown below.

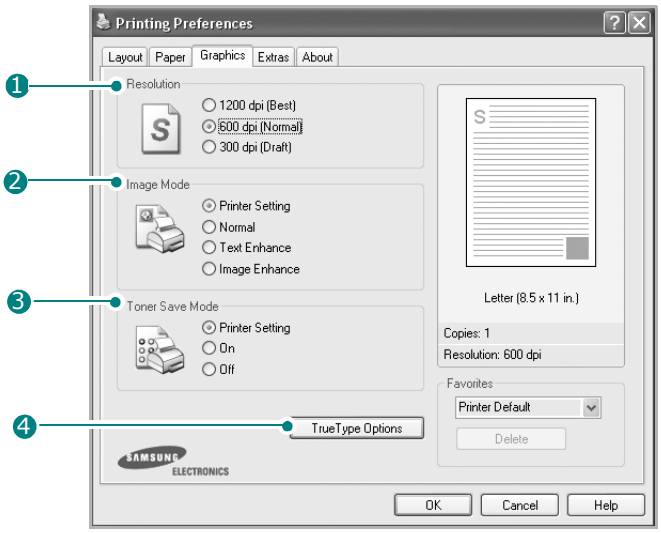

Property	Description
❶ **Resolution**	You can select the printing resolution by choosing from **1200 dpi [Best]**, **600 dpi [Normal]**, or **300 dpi [Draft]**. The higher the setting, the sharper the printed characters and graphics. Higher settings may increase the time it takes to print a document.
❷ **Image Mode**	Some printed characters or images appear to have jagged or uneven edges. Set this **Image Mode** option to improve the print quality of your text and image, and make the characters and images appear smoother. • **Printer Setting**: When you select this option, this feature is determined by the setting you've made on the control panel of the machine, affecting print quality accordingly. • **Normal**: This setting prints images in the normal mode. • **Text Enhance**: This setting refines the print quality of characters by smoothing out jagged edges that can occur on the angles and curves of each character. • **Image Enhance**: This setting refines the print quality of photo images.

Property	Description
❸ **Toner Save Mode**	Selecting this option extends the life of your toner cartridge and reduces your cost per page without a significant reduction in the print quality. • **Printer Setting**: When you select this option, the Toner Save feature is determined by the setting you've made on the control panel of the machine affecting print quality accordingly. • **On**: Select this option to allow the machine to use less toner on each page. • **Off**: When you do not need to save toner to print a document, select this option.
❹ **TrueType Options**	You can use advanced settings by clicking the **TrueType Options** button. 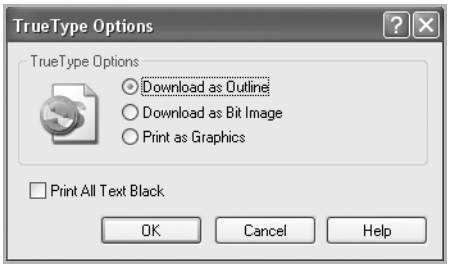 **TrueType Options** This option determines how the driver tells the machine to image the text in your document. Select the appropriate setting according to the status of your document. • **Download as Outline**: When this option is selected, the driver will download any TrueType fonts that are used in your document that are not already stored (resident) in your machine. If, after printing a document, you find that the fonts did not print correctly, choose **Download as Bit Image** and resubmit your print job. The **Download as Bit Image** setting is often useful when printing Adobe. • **Download as Bit Image**: When this option is selected, the driver downloads the font data as bitmap images. Documents with complicated fonts, such as Korean or Chinese, or various other types of fonts, print faster in this setting.

Property	Description
❹ **TrueType Options** (continued)	• **Print as Graphics**: When this option is selected, the driver downloads any fonts as graphics. When printing documents with high graphic content and relatively few TrueType fonts, printing performance (speed) may be enhanced in this setting. **Print All Text Black** When the **Print All Text Black** option is checked, all text in your document prints in solid black, regardless of the color it appears on the screen. When this option is not checked, colored text prints in shades of gray.

Extras Tab

See page 4.2 for more information about accessing printer properties. Click the **Extras** tab to access the following features:

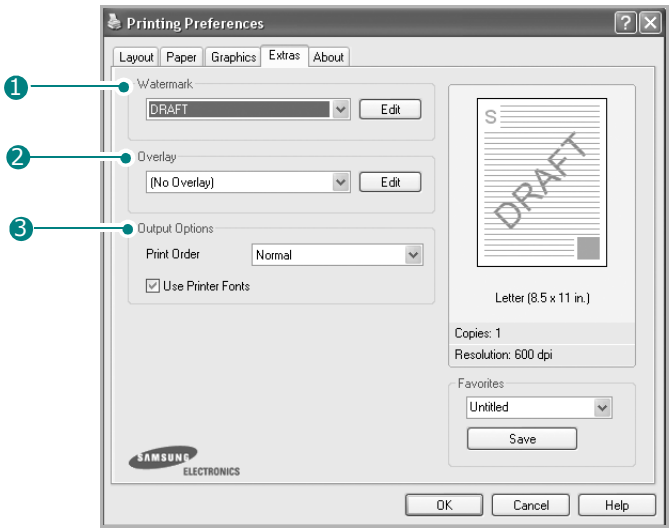

Option	Description
❶ **Watermark**	You can create a background image of text to print on each page of your document. See "Using Watermarks" on page 4.18.

Option	Description
❷ **Overlay**	Overlays are often used to take the place of preprinted forms and letterhead paper. See "Using Overlays" on page 4.21.
❸ **Output Options**	**Print Order**: You can set the sequence for the pages to print. Select the print order from the drop-down list. • **Normal**: Your machine prints all pages from the first page to the last page. • **Reverse All Pages**: Your machine prints all pages from the last page to the first page. • **Print Odd Pages**: Your machine prints only the odd numbered pages of the document. • **Print Even Pages**: Your machine prints only the even numbered pages of the document. **Use Printer Fonts**: When this option is selected, the machine uses the fonts that are stored in its memory (resident fonts) to print your document, rather than downloading the fonts used in your document. Because downloading fonts takes time, selecting this option can speed up your printing time.

About Tab

Use the **About** tab to display the copyright notice and the version number of the driver. If you have an Internet browser, you can connect to the Internet by clicking on the web site icon. See page 4.2 for more information about accessing printer properties.

Printer Tab

If you access printer properties through the **Printers** folder, you can view the **Printer** tab. Click the **Printer** tab to access the following properties:

- **Optional Tray**: If you install an optional Tray 2, in the printer properties window, you can tell the machine to recognize and use it for PC-printing by selecting **Tray 2** in the **Optional Tray** drop down list.
- **High Altitude Correction**: If your machine is going to be used at an altitude above 1,500 m, checking this option will optimize the print quality for those circumstances.

Using a Favorite Setting

The **Favorites** option, available on each tab, except for the **About** tab, allows you to save the current properties settings for future use.

To save a Favorites item:

1 Change the settings on each tab, as needed.

2 Enter a name for the item in the **Favorites** input box.

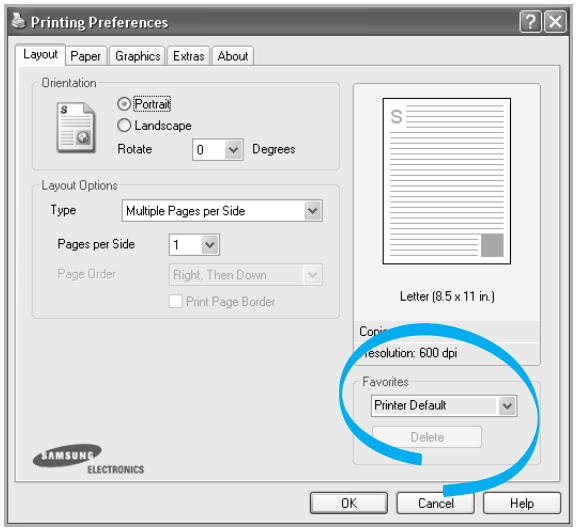

3 Click **Save**.

To use a saved setting, select it from the **Favorites** drop-down list.

To delete a favorite setting item, select it from the list and click **Delete**.

You can also restore the printer driver's default settings by selecting **Printer Default** from the list.

Using Help

Your machine has a help screen that can be activated using the **Help** button in the printer properties window. The help screen gives detailed information about the printer features provided by the printer driver.

You can also click ? in the upper right hand corner, and then click on any setting.

Printing Multiple Pages on One Sheet of Paper

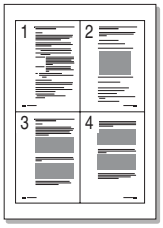

You can select the number of pages to print on a single sheet of paper. To print more than one page per sheet, the pages are reduced in size and arranged in the order you specify. You can print up to 16 pages on one sheet.

1 To change the print settings from your software application, access printer properties. See page 4.2.

2 From the **Layout** tab, choose **Multiple Pages per Side** from the **Type** drop-down list.

NOTE: This feature is not available when you select **Fit to Page** or **Reduce/Enlarge** from the **Paper** tab.

3 Select the number of pages you want to print per sheet (1, 2, 4, 6, 9, or 16) on the **Pages per Side** drop-down list.

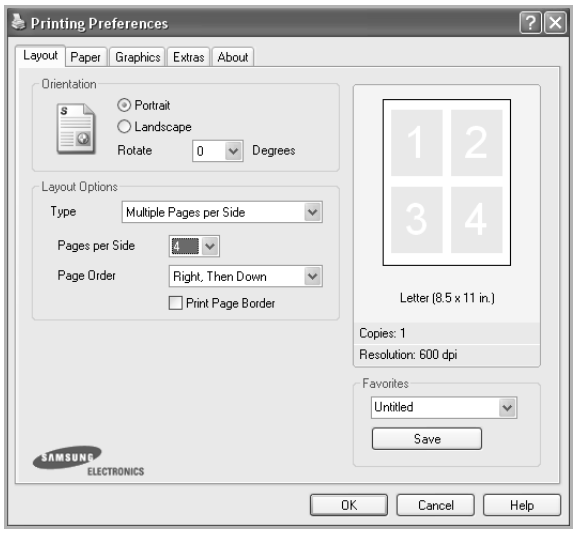

4 Select the page order on the **Page Order** drop-down list, if necessary.

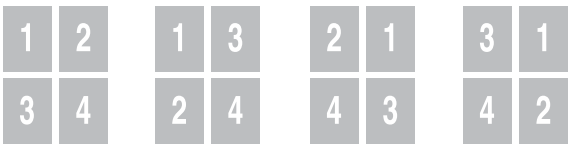

Right, Then Down | Down, Then Right | Left, Then Down | Down, Then Left

Check **Print Page Border** to print a border around each page on the sheet.

NOTE: **Page Order** and **Print Page Border** are enabled only when the number of pages per side is 2, 4, 6, 9, or 16.

5 Click the **Paper** tab and select the paper source, size, and type.

6 Click **OK** and print the document.

Printing Posters

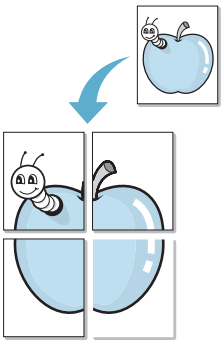

You can print a single-page document onto 4, 9, or 16 sheets of paper, for the purpose of pasting the sheets together to form one poster-sized document.

1 To change the print settings from your software application, access printer properties. See page 4.2.

2 From the **Layout** tab, select **Poster** on the **Type** drop-down list.

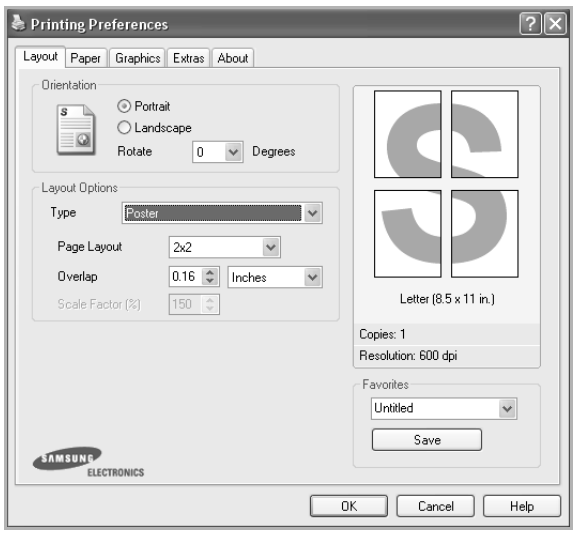

NOTE: This feature is not available when you select **Fit to Page** or **Reduce/Enlarge** from the **Paper** tab.

3 Configure the poster option:

You can select the page layout from **2x2**, **3x3**, **4x4**, or **Custom**. If you select **2x2**, the image is automatically stretched to cover 4 physical pages.

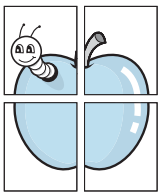

▲ 2 x 2

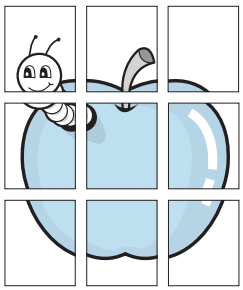

▲ 3 x 3

If you select **Custom**, you can manually set the scale rate of the image in the **Scale Factor** input box.

Specify an overlap in millimeters or inches to make it easier to reconstruct the resulting poster.

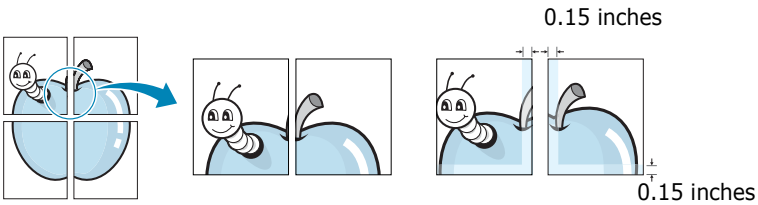

4 Click the **Paper** tab and select the paper source, size, and type.

5 Click **OK** and print the document. You can complete the poster by pasting the sheets together.