3. NAM PROGRAMMING

NAM features can be programmed as follows:

Notes:
- If you enter the NAM program mode, each item shows the currenly stored data. Go to the next item by pressing **STO**.
- You can modify the data by entering a new data.
- If you enter a wrong digit, press **CLR** to delete the last digit. Press and hold **CLR** to delete all digits.
- To scroll items backwards or forwards, press the *,# button on the left side of the phone.

General Setup

LCD Display	Key in	Function
47*869#08#9	47*869#08#9	-select NAM programming
NAM program 1:General 2:Setup NAM1	1	-choose 'GENERAL'
ESN B0000000	#	-Electronic Serial Number of the phone
CAI version 2	#	-The version of Common Air Interface supported by the mobile
SCM 00101010	#	-Station Class Mark displays the power class(bit0~1), transmission(bit2), slotted class(bit5), dual mode(bit6).
VOC8/13/EVRC SO_VOIC_EVRC	#	-The service option supported by the the mobile
Lock Code 0000	(0000) 4-digit code **STO**	-Lock code, current status is displayed to change, enter new code. -stores it
Slot Mode Yes	***** or **#** **STO**	-Slot mode. 'Yes' indicates the slot mode. changes the status. -stores it.
Slot Index 2	**0-7** **STO**	-Slot mode index. The higher, the longer sleeping time to change, enter new one. -stores it.
Pref NAM1... Digital only	**STO**	-Preferred system selection for NAM1 changes the system. -stores it.
Pref NAM2... Digital only	**STO**	-Preferred system selection for NAM2 changes the system. -stores it.

LCD Display	Key in	Function
Pref NAM3... Digital only	**STO**	-Preferred system selection for NAM3 changes the system. -stores it.
Pref NAM4... Digital only	**STO**	-Preferred system selection for NAM4 changes the system. -stores it.

Setting Up NAM1

LCD Display	Key in	Function
NAM Program 1:General 2:Setup NAM1	2	-Choose 'Setup NAM1.'
IMSI_MCC 454	 number **STO**	-IMSI Moble Country Code, current code is displayed. to change, enter new one. -stores it.
IMSI_MNC 05	 number **STO**	-IMSI Mobile Network Code, current code is displayed. to change, enter new one. -stores it.
CDMA TEL NO. 8520000000	 phone number **STO**	-CDMA current number is displayed. to change, enter new one. -stores it.
CDMA pref.. A pref	 ***** or # **STO**	-Preferred system selection, current system is displayed. changes the system. -stores it.
CDMA ACCOLC 0	 class number **STO**	-CDMA Access Overload Class, current status is displayed. to change, enter new one. -stores it.
Pchn Sys A 283	 channel number **STO**	-Preferred channel currently used under system A to change, enter new one. -stores it.
Pchn Sys B 384	 channel number **STO**	-Preferred channel currently used under system B to change, enter new one. -stores it.
Schn Sys A 691	 channel number **STO**	-Second channel currently used under system A to change, enter new one. -stores it.
Schn Sys B 777	 channel number **STO**	-Second channel currently used under system B to change, enter new one. -stores it.
CD Acq SID 1 0	 ID number 1~6 **STO**	-1'st Acquisition system ID, current status is displayed. to change, enter new one. -stores it.
CD lockSID 1 10640	 ID number **STO**	-1'st lock system ID,current status is displayed. to change, enter new one. -stores it.
CD lockSID 2 8103	 ID number **STO**	-2'nd lock system ID,current status is displayed. to change, enter new one. -stores it.

LCD Display	Key in	Function
CD lockSID 3 0	 ID number **STO**	-3'rd lock system ID,current status is displayed. to change, enter new one. -stores it.
CDMA HomeSID Yes	 ***** or # **STO**	-CDMA Home system ID, current status is displayed changes the status. -stores it.
CDMA fSID Yes	 ***** or # **STO**	-CDMA foreign SID, current status is displayed. changes the system. -stores it.
CDMA fNID Yes	 ***** or # **STO**	-CDMA foreign NID, current status is displayed. changes the system. -stores it.
SID #1 10641	 number **STO**	-first SID written in the list, current status is displayed. to change, enter new one. -stores it.
NID #1 65535	 number **STO**	-first NID written in the list, current status is displayed. to change, enter new one. -stores it.
SID #2 13	 number **STO**	-2nd SID written in the list, current status is displayed. to change, enter new one. -stores it.
NID #2 0	 number **STO**	-2nd NID written in the list, current status is displayed to change, enter new one. -stores it.
SID #3 0	 number **STO**	-3rd SID written in the list, current status is displayed. to change, enter new one. -stores it.
NID #3 0	 number **STO**	-3rd SID written in the list, current status is displayed. to change, enter new one. -stores it.
SID #4 0	 number **STO**	-4th SID written in the list, current status is displayed. to change, enter new one. -stores it.
NID #4 0	 number **STO**	-4th NID written in the list, current status is displayed. to change, enter new one. -stores it.

Setting Up NAM2

LCD Display	Key in	Function
NAM Program 1:General 2:Setup NAM1	3	-Choose 'Setup NAM2'

The NAM2 setup program is the same as 'NAM1'.

Setting Up NAM3

LCD Display	Key in	Function
NAM Program 3:Setup NAM2 4:Setup NAM3	4	-Choose 'Setup NAM3'.

The NAM3 setup program is the same as 'NAM1'.

Setting Up NAM4

LCD Display	Key in	Function
NAM Program 5:Setup NAM4	5	-Choose 'Setup NAM4'

The NAM4 setup program is the same as 'NAM1'.

5. TEST PROCEDURE
TUNE-UP PROCEDURE

List of Equipment

- DC Power Supply
- Test Jig
- Test Cable
- CDMA Mobile Station Test Set HP8924C, HP83236A, CMD-80, etc
- Spectrum Analyzer(include CDMA test mode) HP8596E

Configuration of Test

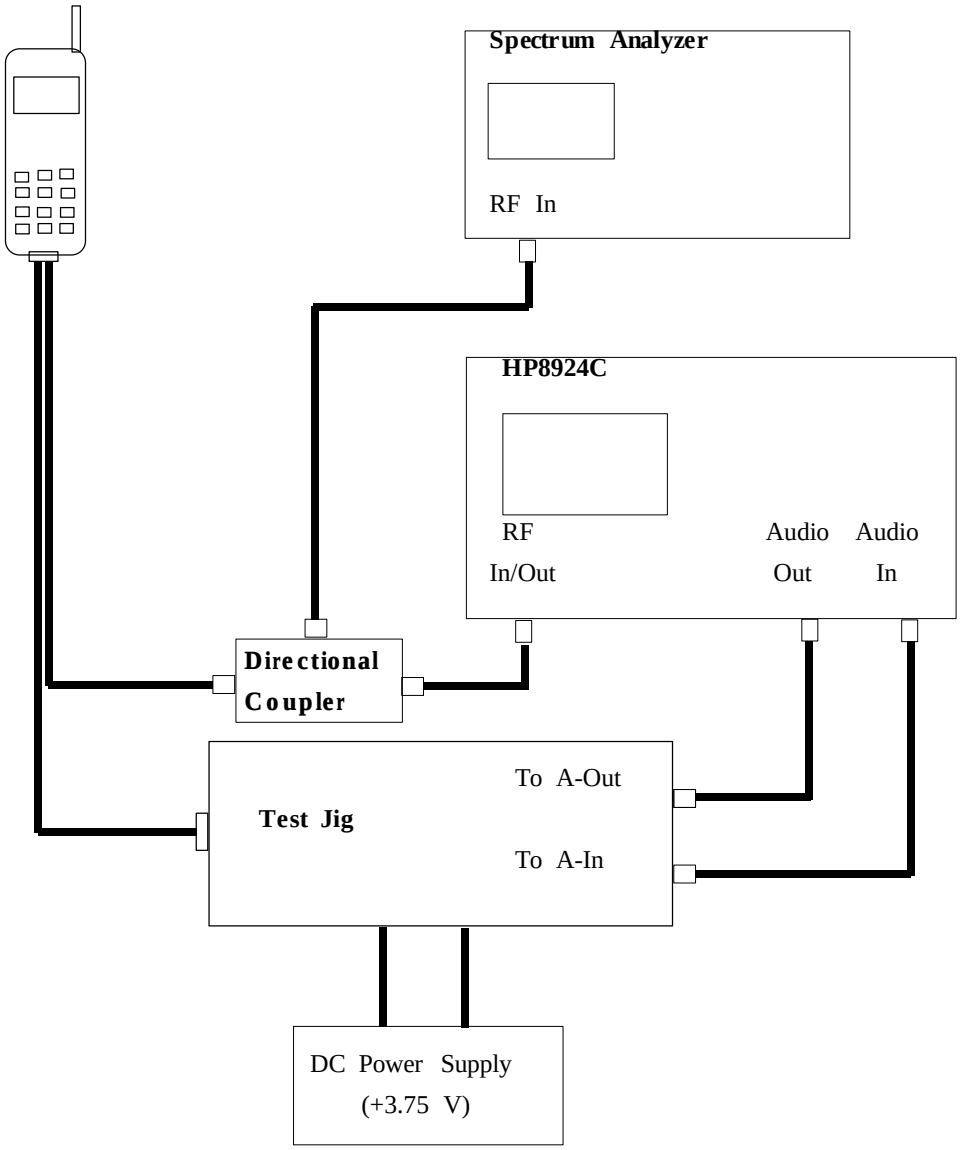

Change to Test Mode

A. To change the phone from Normal Mode to test Mode, You should enter the following keys.
" * 7 5 9 # 8 1 3 5 8 0 "

B. The command ¡°0 1"(Suspend) is entered to start test.

C. To finish the Test Mode, You should enter the command "0 2".

Channel Selection and Tx Power Output level Control

1. CDMA

A. You should change the phone from Normal Mode to Test mode

B. The command ¡°0 1"(Suspend) is entered to start test.

C. You should enter the following keys.
" 0 9 X X X X #, 0 7, 7 1 X X X #, 3 4 "
- If you enter the command "0 9", You can select the channel
  ex) 0 9 0 3 6 3 (under-bar means channel number)
- The command "0 7¡±means Carrier On (Carrier Off : ¡°0 8¡±)
- If you enter the command "7 1", You can control the power output level. Following under-bar means AGC code, 0 to 511. And you can control the power output level using Volume Up/Down Keys.
  ex) 7 1 4 7 5
- If you enter the command "3 4", You can spread spectrum to 1.23MHz bandwidth.

D. After enter the command "7 4" and control the Tx Power Output Level to be 0.0dBm using Volume Up/Down keys, press "STO" key to store Data in EEPROM.

TEST CABLE DESCRIPTION FOR SCH-670

1. TEST CABLE

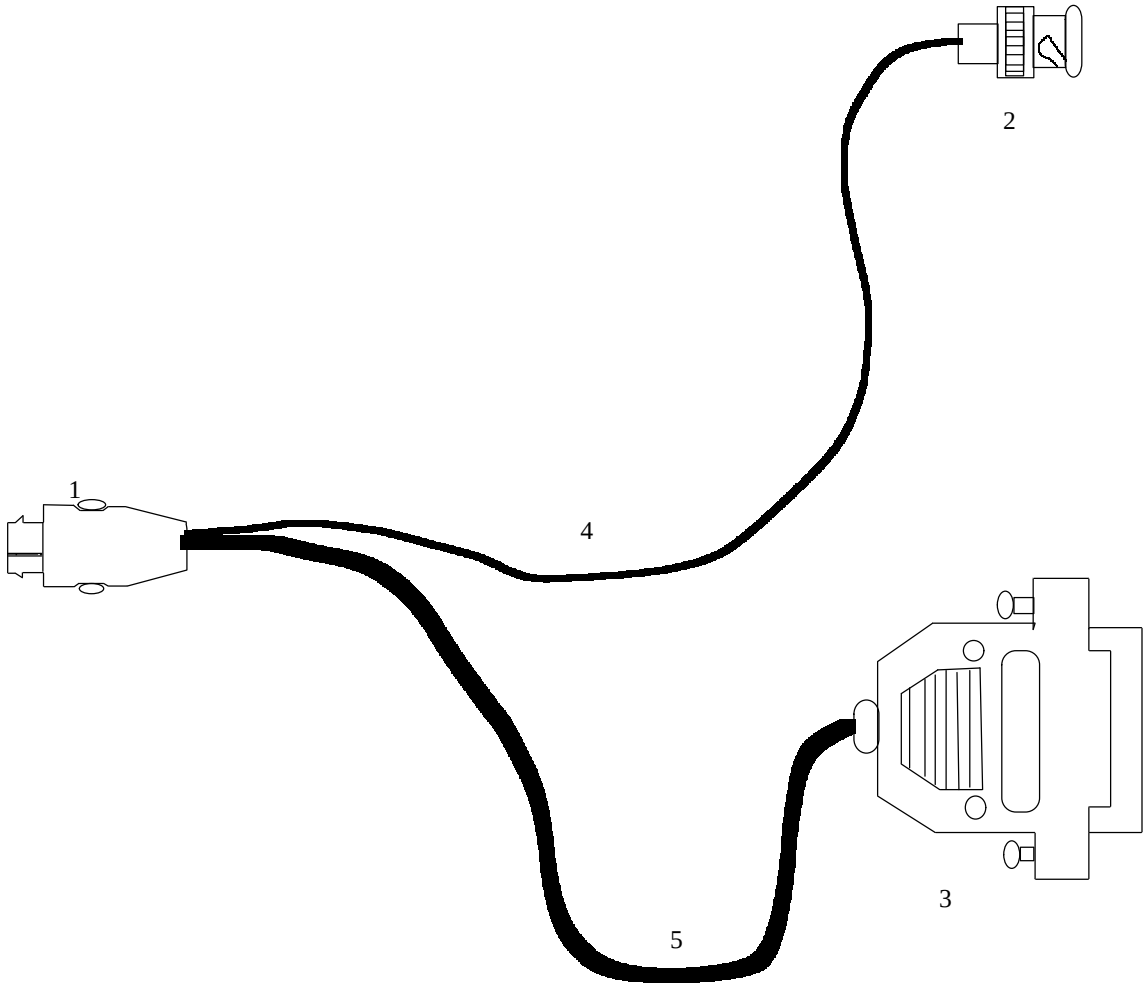

2. TEST CABLE CONNECTIONS

1	PLUG CONNECT TO SCH-670
2	BNC CONNECTOR (RF)
3	Dsub 25PIN CONNECTOR (DATA)
4	RF CABLE
5	DATA CABLE

3. Dsub 25 PIN CONNECTOR PIN DESCRIPTION (TEST CABLE 1, BACK SIDE)

DATA DESCRIPTION	Dsub CONN. PIN NO.
Vcc	4, 5, 6
GND	13, 23, 24, 25
PW ON/OFF	7
TX AUDIO	10
TX DATA	22
RX AUDIO	12
RX DATA	21
RSSI	8

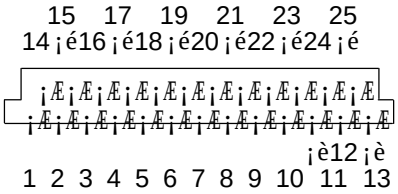

4. CONVERSION TABLE OF FREQUENCY vs CHANNEL

T Y P E	CHANNEL	CONVERSION EQUATION	REMARK
TX FREQUENCY	1 ¡ÂN¡Â 799 990 ¡ÂN¡Â1023	F=0.03 ¡¿ N + 825.00 F=0.03 ¡¿ (N-1023) + 825.00	N ; CH NUMBER F ; FREQUENCY
RX FREQUENCY	1 ¡ÂN¡Â 799 990 ¡ÂN¡Â1023	F=0.03 ¡¿ N + 870.00 F=0.03 ¡¿ (N-1023) + 870.00	

CDMA MODE

TEST ITEM	STEP	PROCEDURE
1. PREPARE	a	Connect the test equipment
	b	Enter the test mode: press [* 7 5 9 # 8 1 3 5 8 0]
	c	If you press a wrong key, press [#] key and then enter new command.
	d	To exit the test mode at any time : press [0 2]01222222
2. FREQUENCY ACCURACY	a	Set the channel 363: press [0 9 0 3 6 3]
	b	Turn the carrier on and set the power level. : press [0 7 7 1 X X X]
	c	Measure the frequency accuracy (spec: ¡¾300Hz)
	d	To adjust the Frequency Accuracy : press [8 9] and use vloume key
	e	Store the Frequency Accuracy in EEPROM: Press [STO]
3. OCCUPIED CDMA BAND WIDTH	a	Set the channel 363: press [0 9 0 3 6 3]
	b	Turn the carrier on and set the power level. : press [0 7 3 4 7 1 X X X]
	c	Measure the Band Width. (spec: 1.32MHz)
4. LIMITATIONS ON EMISSIONS	a	Set the channel 363: press [0 9 0 3 6 3]
	b	Turn the carrier on and set the power level. : press [0 7 3 4 7 1 X X X]
	c	Measure the spurious at F_c¡¾900KHz, F_c¡¾1.98MHz, $2F_c$ $3F_c$, $1/2F_c$ spec: F_c¡¾900KHz below 42dBc/30KHz F_c¡¾1.98MHz below 54dBc/30KHz Outside Receive Band 43+10log (PY) PY: Mean output power in watts
5. GATED POWER & TIME	a	Set the Service option: 2
	b	Set the Data Rate: Eighth (1200bps)
	c	Registering: HHP --> HP8924C
	d	Call : HP8924C --> HHP
	e	Measure the Gated Power & Time spec: Gated Power at least 20dB Gated Time - Rising Time: below 6us Falling Time: below 6us Burst Time: below 1.25ms