PCTEST ENGINEERING LABORATORY, INC.

6660 – B Dobbin Road · Columbia, MD 21045 · USA
Telephone 410.290.6652 / Fax 410.290.6654
http://www.pctestlab.com (email: randy@pctestlab.com)

CERTIFICATE OF COMPLIANCE (SAR EVALUATION)

CLASS II PERMISSIVE CHANGE

APPLICANT NAME & ADDRESS:
SAMSUNG ELECTRONICS CO., LTD.
3351 Michelson Drive, Suite 290
Irvine, CA 92612

DATE & LOCATION OF TESTING:
Dates of Tests: December 8-10, 2003
Test Report S/N: SAR.231208613.A3L
Test Site: PCTEST Lab, Columbia, MD USA

FCC ID:	**A3LSCHA790**
APPLICANT NAME:	**SAMSUNG ELECTRONICS CO., LTD.**

EUT Type:	Digital Quad-Band Phone (CDMA/PCS/GSM/DCS)
Tx Frequency (USA):	824.70 – 848.31 MHz (CDMA) 1851.25 – 1908.75 MHz (PCS CDMA)
Rx Frequency (USA):	869.70 – 893.31 MHz (CDMA) 1931.25 – 1988.75 MHz (PCS CDMA)
Max. RF Output Power:	0.358 W ERP CDMA (25.533 dBm) / 25.5 dBm Conducted 0.356 W EIRP PCS CDMA (25.501 dBm) / 25.5 dBm Conducted
Max. SAR Measurement:	1.47 W/kg CDMA Head SAR; 1.08 W/kg CDMA Body SAR; 0.73 W/kg PCS CDMA Head SAR; 0.68 W/kg PCS CDMA Body SAR
Trade Name/Model(s):	*SCH-A790*
FCC Rule Part(s):	§2.1093; FCC/OET Bulletin 65 Supplement C [July 2001]
Application Type:	Class II Permissive Change
Test Device Serial No.:	Identical Prototype [S/N: #3F0F5FE2]
Permissive Changes:	Changed keypad, PCB layout, LCD module, and antenna length
Original Grant Date:	October 22, 2003

This wireless portable device has been shown to be capable of compliance for localized specific absorption rate (SAR) for uncontrolled environment/general population exposure limits specified in ANSI/IEEE Std. C95.1-1992 and had been tested in accordance with the measurement procedures specified in FCC/OET Bulletin 65 Supplement C (2001) and IEEE Std. P1528 D1.2 (April 2003).

I attest to the accuracy of data. All measurements reported herein were performed by me or were made under my supervision and are correct to the best of my knowledge and belief. I assume full responsibility for the completeness of these measurements and vouch for the qualifications of all persons taking them.

Grant Conditions: Power output listed is ERP for Part 22 and EIRP for Part 24. SAR compliance for body- worn operating configuration is limited to the specific belt-clip/holster tested for this filing. End-users must be informed of the body-worn operating requirements for satisfying RF exposure compliance.

PCTEST certifies that no party to this application has been denied the FCC benefits pursuant to Section 5301 of the Anti-Drug Abuse Act of 1988, 21 U.S.C. 862.

Alfred Cirwithian
Vice President Engineering

© 2004 PCTEST Engineering Laboratory, Inc.

TABLE OF CONTENTS

1. INTRODUCTION / SAR DEFINITION 3
2. SAR MEASUREMENT SETUP 4
3. ALIDX-500 E-FIELD PROBE SYSTEM 5
4. PROBE CALIBRATION PROCESS 6
5. PHANTOM & EQUIVALENT TISSUES 7
6. TEST SYSTEM SPECIFICATIONS 8
7. DOSIMETRIC ASSESSMENT & PHANTOM SPECS 9
8. DEFINITION OF REFERENCE POINTS 10
9. TEST CONFIGURATION POSITION 11
10. ANSI/IEEE C95.1 - 1992 RF EXPOSURE LIMITS 12
11. MEASUREMENT UNCERTAINTIES 13
12. SAR TEST DATA SUMMARY 14
13. SAR TEST EQUIPMENT 15
14. CONCLUSION 16
15. REFERENCES 17

EXHIBIT A. SYSTEM VERIFICATION 18

EXHIBIT A. SAR DATA SUMMARY 18-28

© 2004 PCTEST Engineering Laboratory, Inc.

1. INTRODUCTION / SAR DEFINITION

The FCC has adopted the guidelines for evaluating the environmental effects of radiofrequency radiation in ET Docket 93-62 on Aug. 6, 1996 to protect the public and workers from the potential hazards of RF emissions due to FCC-regulated portable devices.[1]
The safety limits used for the environmental evaluation measurements are based on the criteria published by the American National Standards Institute (ANSI) for localized specific absorption rate (SAR) in *IEEE/ANSI C95.1-1992 Standard for Safety Levels with Respect to Human Exposure to Radio Frequency Electromagnetic Fields, 3 kHz to 300 GHz*. (c) 1992 by the Institute of Electrical and Electronics Engineers, Inc., New York, New York 10017.[2] The measurement procedure described in *IEEE/ANSI C95.3-1992 Recommended Practice for the Measurement of Potentially Hazardous Electromagnetic Fields - RF and Microwave*[3] is used for guidance in measuring SAR due to the RF radiation exposure from the Equipment Under Test (EUT). These criteria for SAR evaluation are similar to those recommended by the National Council on Radiation Protection and Measurements (NCRP) in *Biological Effects and Exposure Criteria for Radiofrequency Electromagnetic Fields,"* NCRP Report No. 86 (c) NCRP, 1986, Bethesda, MD 20814.[6] SAR is a measure of the rate of energy absorption due to exposure to an RF transmitting source. SAR values have been related to threshold levels for potential biological hazards.

SAR Definition

Specific Absorption Rate (SAR) is defined as the time derivative (rate) of the incremental energy (dU) absorbed by (dissipated in) an incremental mass (dm) contained in a volume element (dV) of a given density (r). It is also defined as the rate of RF energy absorption per unit mass at a point in an absorbing body (see Fig. 1.1).

$$SAR = \frac{d}{dt}\left(\frac{dU}{dm}\right) = \frac{d}{dt}\left(\frac{dU}{r\,dv}\right)$$

Figure 1.1
SAR Mathematical Equation

SAR is expressed in units of Watts per Kilogram (W/kg).

SAR = $s\,E^2 / r$

where:

s = conductivity of the tissue-simulant material (S/m)
r = mass density of the tissue-simulant material (kg/m^3)
E = Total RMS electric field strength (V/m)

NOTE: The primary factors that control rate of energy absorption were found to be the wavelength of the incident field in relations to the dimensions and geometry of the irradiated organism, the orientation of the organism in relation to the polarity of field vectors, the presence of reflecting surfaces, and whether conductive contact is made by the organism with a ground plane.[6]

© 2004 PCTEST Engineering Laboratory, Inc.

2. SAR MEASUREMENT SETUP

Robotic System

Measurements are performed using the ALIDX-500 automated dosimetric assessment system. The ALIDX-500 is made by IDX Robotics, Inc. (IDX) in the United States and consists of high precision robotics system (CRS), robot controller, Pentium 4 computer, near-field probe, probe alignment sensor, and the Left and Right SAM phantoms containing the head/brain equivalent tissue, and the flat phantoms for body/muscle equivalent. The robot is a six-axis industrial robot performing precise movements to position the probe to the location (points) of maximum electromagnetic field (EMF) (see Fig. 2.1).

System Hardware

The Robot table consists of the power supply, robot controller, safety computer, teach pendant (Joystick), six-axis robot arm, and the probe. The cell controller consists of DELL Dimension 4300 Pentium-4 1.6 GHz computer with Windows 2000 system and SAR Measurement software, National Instruments analog card, monitor, keyboard, and mouse. The robot controller is connected to the cell controller to communicate between the two computers. The probe data is connected to the cell controller via data acquisition cables.

System Electronics

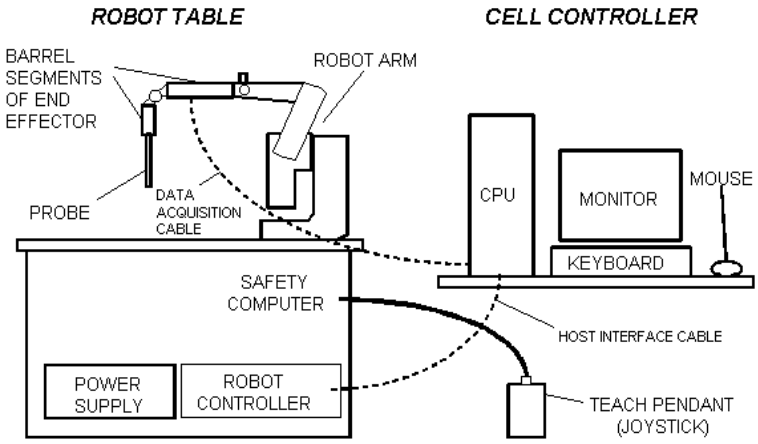

Figure 2.1
SAR Measurement System Setup

When the Robot is in the home position, the Y-axis of the coordinate system parallels the line of intersection between the tabletop and the long axis of the Robot's Large Shoulder. The Teach Pendant may be used to establish the X,Y coordinate directions by depressing the 0-X and 0-Y MOTOR/AXIS switches while in axis mode.

The robot is first taught to position the probe sensor following a specific pattern of points. In the first sweep the sensor enclosure touches the inside of the phantom head. The SAR is measured on a defined grid of points that are concentrated on the surface of the head closest to the antenna of the transmitting device (EUT).

© 2004 PCTEST Engineering Laboratory, Inc.

3. ALIDX-500 E-FIELD PROBE SYSTEM

Probe Measurement System

Fig 3.1
IDX System

The near-field probe is an implantable isotropic E-field probe that measures the voltages proportional to the $|E|^2$ (electric) or $|H|^2$ (magnetic) fields. The probe is enclosed in a hollow glass protective cylinder 9-mm. outer diameter, 0.5 mm. thickness and 30 cm. in length. The E-probe contains three electrically small array of orthogonal dipoles strategically placed to provide greater accuracy and to compensate for near-field spatial gradients. The probe contains diodes that are placed over the gap of the dipoles to improve RF detection. The electrical signal detected by each diode is amplified by three DC amplifiers and are contained in a shielded container in the robot end effector so its performance is not affected by the presence of incident electromagnetic fields (see Fig. 3.1).

Probe Specifications

Frequency Range:	10 kHz – 6.0 GHz
Calibration:	In air from 10 MHz to 6.0 GHz
	In brain and muscle simulating tissue at Frequencies from 835 up to 5800MHz
Sensitivity:	3.5 mV/mW/cm^2 (air – typical)
DC Resistance:	300 kohm
Isotropic Response:	0.25 dB
Dynamic Range:	10 mW/kg – 100 W/kg
Resistance to Pull:	25 N
Probe Length:	290 mm
Probe Tip Material:	Glass
Probe Tip Length:	40 mm
Probe Tip Diameter:	7 ± 0.2 mm
Application:	SAR Dosimetry Testing
	HAC (Hearing Aid Compatibility)
	Compliance tests of mobile phones

Figure 3.2
Triangular Probe Configuration

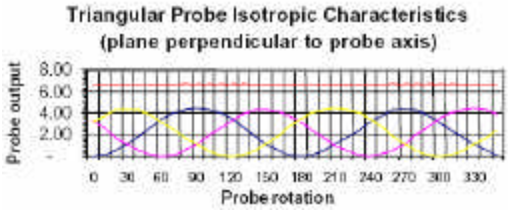

Figure 3.3
Probe Characteristics

© 2004 PCTEST Engineering Laboratory, Inc.

4. PROBE CALIBRATION PROCESS

Dosimetric Assessment Procedure

Each E-Probe/Probe amplifier combination has unique calibration parameters. A TEM calibration procedure is conducted to determine the proper amplifier settings to enter in the probe parameters. The amplifier settings are determined for a given frequency by subjecting the Probe to a known E-field density (1mW/cm^2) using an RF Signal generator, TEM cell, and RF Power Meter. The SAR measurement software is used for Probe calibration.

Free Space Assessment

The free space E-field from amplified probe outputs is determined in a test chamber. This calibration can be performed in a TEM cell if the frequency is below 1 GHz and in a waveguide or some other methodologies above 1 GHz for free space. For the free space calibration, we place the probe in the volumetric center of the cavity and at the proper orientation with the field. We then rotate the probe 360 degrees until the three channels show the maximum reading. The power density readings equates to 1mW/cm^2.

Temperature Assessment

E-field temperature correlation calibration is performed in a flat phantom filled with the appropriate simulated brain tissue. The measured free space E-field in the medium correlates to temperature rise in a dielectric medium. For temperature correlation calibration a RF transparent thermistor-based temperature probe is used in conjunction with the E-field probe.

$$\text{SAR} = C\frac{\Delta T}{\Delta t}$$

where:

Δt = exposure time (30 seconds),

C = heat capacity of tissue (brain or muscle),

ΔT = temperature increase due to RF exposure.

SAR is proportional to $\Delta T / \Delta t$, the initial rate of tissue heating, before thermal diffusion takes place. Now it's possible to quantify the electric field in the simulated tissue by equating the thermally derived SAR to the E- field;

$$\text{SAR} = \frac{|E|^2 \cdot s}{r}$$

where:

σ = simulated tissue conductivity,

ρ = Tissue density (1.25 g/cm^3 for brain tissue)

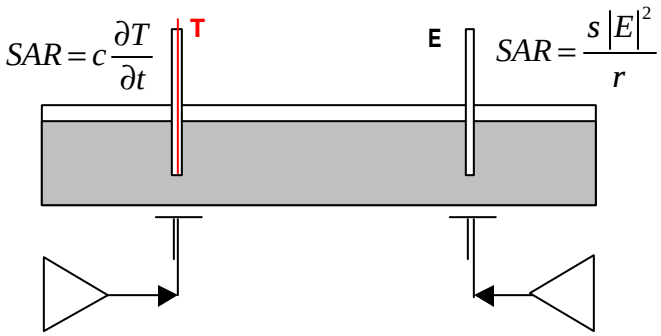

Figure 4.1 Temperature Assessment Test Configuration

© 2004 PCTEST Engineering Laboratory, Inc.

5. PHANTOM & EQUIVALENT TISSUES

Figure 5.1
SAM Phantoms

The Left and Right SAM Phantoms are constructed of a vivac composite integrated in a corian stand. The shape of the shell is based on data from an anatomical study designed to determine the maximum exposure in at least 90% of all users [7][8]. It enables the dosimetric evaluation of left and right hand phone usage as well as body mounted usage at the flat phantom region. A cover prevents the evaporation of the liquid. Reference markings on the Phantom allow the complete setup of all predefined phantom positions and measurement grids by manually teaching three points in the robot. (see Fig. 5.1)

Brain & Muscle Simulating Mixture Characterization

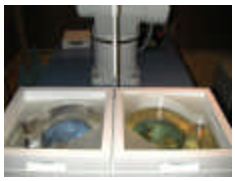

Figure 5.2
Head Simulated Tissue

The brain and muscle mixtures consist of a viscous gel using hydroxethylcellullose (HEC) gelling agent and saline solution (see Table 6.1). Preservation with a bactericide is added and visual inspection is made to make sure air bubbles are not trapped during the mixing process. The mixture is calibrated to obtain proper dielectric constant (permittivity) and conductivity of the desired tissue. The head tissue dielectric parameters recommended by the IEEE SCC-34/SC-2 have been incorporated in the following table. Other head and body tissue parameters that have not been specified in P1528 are derived from the issue dielectric parameters computed from the 4-Cole-Cole equations. The mixture characterizations used for the brain and muscle tissue simulating liquids are according to the data by C. Gabriel and G. Hartsgrove [9].(see Table 5.1)

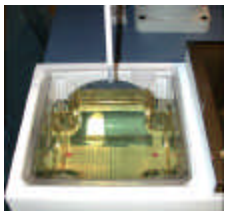

Figure 5.3
Body/Muscle Simulated Tissue

Ingredients (% by weight)	Frequency (MHz)									
	450		835		915		1900		2450	
Tissue Type	Head	Body	Head	Body	Head	Body	Head	Body	Head	Body
Water	38.56	51.16	41.45	52.4	41.05	56.0	54.9	40.4	62.7	73.2
Salt (NaCl)	3.95	1.49	1.45	1.4	1.35	0.76	0.18	0.5	0.5	0.04
Sugar	56.32	46.78	56.0	45.0	56.5	41.76	0.0	58.0	0.0	0.0
HEC	0.98	0.52	1.0	1.0	1.0	1.21	0.0	1.0	0.0	0.0
Bactericide	0.19	0.05	0.1	0.1	0.1	0.27	0.0	0.1	0.0	0.0
Triton X-100	0.0	0.0	0.0	0.0	0.0	0.0	0.0	0.0	36.8	0.0
DGBE	0.0	0.0	0.0	0.0	0.0	0.0	44.92	0.0	0.0	26.7

Salt: 99+% Pure Sodium Chloride — Sugar: 98+% Pure Sucrose
Water: De-ionized, 16 MΩ+ resistivity — HEC: Hydroxyethyl Cellulose
DGBE: 99+% Di(ethylene glycol) butyl ether, [2-(2-butoxyethoxy)ethanol]
Triton X-100 (ultra pure): Polyethylene glycol mono [4-(1,1, 3, 3-tetramethylbutyl)phenyl] ether

Table 5.1
Composition of the Brain & Muscle Tissue Equivalent Matter

Device Holder

Figure 5.4
Device Positioner

In combination with the SAM Phantom, the EUT Holder (see Fig. 6.2) enables the rotation of the mounted transmitter in spherical coordinates whereby the rotation point is the ear opening. Device positioning is accurate and repeatable according to the FCC and CENELEC specifications. The device holder can be locked at different phantom locations (left head, right head, flat phantom).

* Note: A simulating human hand is not used due to the complex anatomical and geometrical structure of the hand that may produce infinite number of configurations [8]. To produce the worst-case condition (the hand absorbs antenna output power), the hand is omitted during the tests.

© 2004 PCTEST Engineering Laboratory, Inc.

6. TEST SYSTEM SPECIFICATIONS

Automated Test System Specifications

Positioner

Robot:	CRS Robotics, Inc. Robot Model: F3
Repeatability:	± 0.05 mm (0.002 in.)
No. Of axes:	6

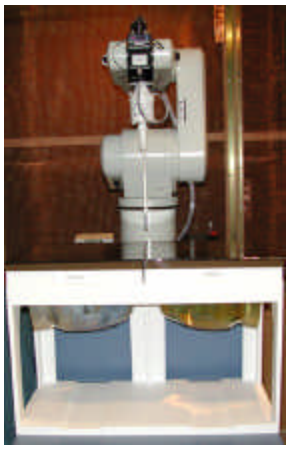

Figure 6.1
ALIDX-500 Test System

Data Acquisition Electronic (DAE) System

Cell Controller

Processor:		Pentium 4
	Clock Speed:	1.6 GHz
	Operating System:	Windows 2000™ Professional
Data Card:		NI DAQ Card (in CPU)

Data Converter

Software:	IDX Flexware
Connecting Lines:	Data Acquisition Cable RS-232 Host Interface Cable
Sampling Rate:	6000 samples/sec

E-Field Probes

Model:	E-010 S/N: PCT003
Construction:	Triangular core absolute encoder system
Frequency:	10 MHz to 6.0 GHz

Phantom

Phantom:	SAM Phantoms (Left & Right)
Shell Material:	Vivac Composite
Thickness:	2.0 ± 0.2 mm

© 2004 PCTEST Engineering Laboratory, Inc.

7. DOSIMETRIC ASSESSMENT & PHANTOM SPECS

Measurement Procedure

The measurement procedure consists of the process parameters, probe parameters, EUT product data, and measurement scans (teach points). The measurement procedure is a set of predefined points to be scanned and measured by the probe, DC amplified and processed by the cell controller. The corresponding voltages determined by the electric and magnetic fields are extrapolated to determine peak SAR value.

The SAR Measurement System measures field strength by employing two different types of systematic measurement scans; a coarse scan and a fine scan. Coarse and fine scans measure field strength in a rectangular area within the XY plane (a plane parallel to the top of the Robot Table). The measurement area is divided into a grid of small squares defined by equally spaced grid lines. During an actual measurement process, the probe moves along grid lines systematically recording the field strength at grid line intersections. Typically, after a coarse scan is completed, a fine scan is conducted at the peak field strength value (hot spot) that was measured in the coarse scan. The fine scan has a greater resolution (smaller grid squares) than the coarse scan, and covers only a fraction of the measurement area in the coarse scan.

Specific Anthropomorphic Mannequin (SAM) Specifications

The phantom for handset SAR assessment testing is a low-loss dielectric shell, with shape and dimensions derived from the anthropometric data of the 90th percentile adult male head dimensions as tabulated by the US Army. The SAM Phantom shell is bisected along the mid-sagittal plane into right and left halves (see Fig. 7.1). The perimeter sidewalls of each phantom halves are extended to allow filling with liquid to a depth that is sufficient to minimized reflections from the upper surface. The liquid depth is maintained at a minimum depth of 15cm to minimize reflections from the upper surface. The SAM shell thickness is 2.0 $\pm$ 0.2 mm.

Figure 7.1
Left and Right SAM Phantom shells

© 2004 PCTEST Engineering Laboratory, Inc.

8. DEFINITION OF REFERENCE POINTS

EAR Reference Point (ERP)

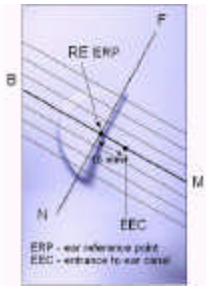

Figure 8.2 Close-up side view of ERPs

Figure 8.1 shows the front, back and side views of the SAM Twin Phantom. The point "M" is the reference point for the center of the mouth, "LE" is the left ear reference point (ERP), and "RE" is the right ERP. The ERPs are 15mm posterior to the entrance to the ear canal (EEC) along the B-M line (Back-Mouth), as shown in Figure 9.2. The plane passing through the two ear canals and M is defined as the Reference Plane. The line N-F (Neck-Front) is perpendicular to the reference plane and passing through the RE (or LE) is called the Reference Pivoting Line (see Figure 8.2). Line B-M is perpendicular to the N-F line. Both N-F and B-M lines are marked on the external phantom shell to facilitate handset positioning [5].

Figure 8.1 Front, back and side view of SAM Twin Phantom

Handset Reference Points

Two imaginary lines on the handset were established: the vertical centerline and the horizontal line. The test device was placed in a normal operating position with the "test device reference point" located along the "vertical centerline" on the front of the device aligned to the "ear reference point" (See Fig. 8.3). The "test device reference point" was than located at the same level as the center of the ear reference point. The test device was positioned so that the "vertical centerline" was bisecting the front surface of the handset at it's top and bottom edges, positioning the "ear reference point" on the outer surface of the both the left and right head phantoms on the ear reference point.

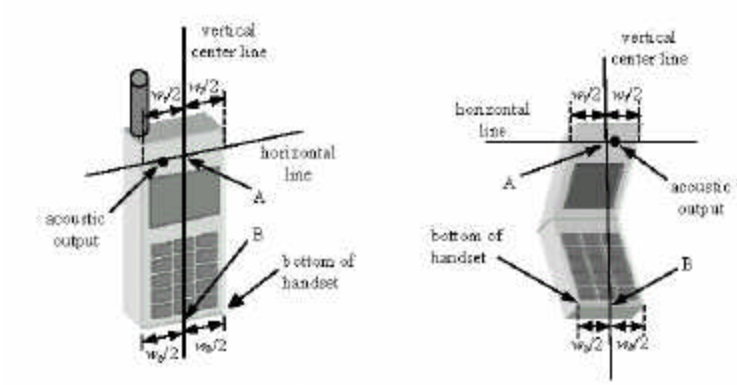

Figure 8.3 Handset Vertical Center & Horizontal Line Reference Points

© 2004 PCTEST Engineering Laboratory, Inc.

9. TEST CONFIGURATION POSITION

Body Holster /Belt Clip Configurations

Body-worn operating configurations are tested with the belt-clips and holsters attached to the device and positioned against a flat phantom in a normal use configuration (see Figure 9.1). A device with a headset output is tested with a headset connected to the device. Body dielectric parameters are used.

Accessories for Body-worn operation configurations are divided into two categories: those that do not contain metallic components and those that do contain metallic components. When multiple accessories that do not contain metallic components are supplied with the device, the device is tested with only the accessory that dictates the closest spacing to the body. Then multiple accessories that contain metallic components are supplied with the device, the device is tested with each accessory that contains a unique metallic component. If multiple accessories share an identical metallic component (i.e. the same metallic belt-clip used with different holsters with no other metallic components) only the accessory that dictates the closest spacing to the body is tested.

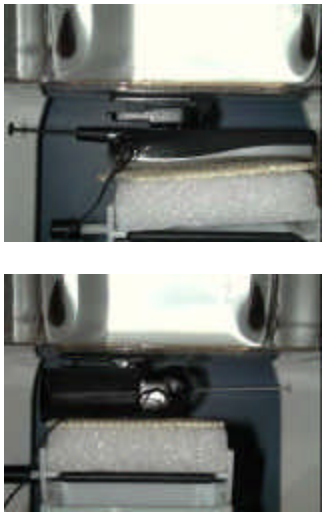

Figure 9.1 Body Belt Clip & Holster Configurations

Body-worn accessories may not always be supplied or available as options for some devices intended to be authorized for body-worn use. In this case, a test configuration where a separation distance between the back of the device and the flat phantom is used. All test position spacings are documented.

Transmitters that are designed to operate in front of a person's face, as in push-to-talk configurations, are tested for SAR compliance with the front of the device positioned to face the flat phantom. For devices that are carried next to the body such as a shoulder, waist or chest-worn transmitters, SAR compliance is tested with the accessory(ies), including headsets and microphones, attached to the device and positioned against a flat phantom in a normal use configuration.

In all cases SAR measurements are performed to investigate the worst-case positioning. Worst-case positioning is then documented and used to perform Body SAR testing.

In order for users to be aware of the body-worn operating requirements for meeting RF exposure compliance, operating instructions and cautions statements must be included in the user's manual.

© 2004 PCTEST Engineering Laboratory, Inc.

10. ANSI/IEEE C95.1 - 1992 RF EXPOSURE LIMITS

Uncontrolled Environment

UNCONTROLLED ENVIRONMENTS are defined as locations where there is the exposure of individuals who have no knowledge or control of their exposure. The general population/uncontrolled exposure limits are applicable to situations in which the general public may be exposed or in which persons who are exposed as a consequence of their employment may not be made fully aware of the potential for exposure or cannot exercise control over their exposure. Members of the general public would come under this category when exposure is not employment-related; for example, in the case of a wireless transmitter that exposes persons in its vicinity.

Controlled Environment

CONTROLLED ENVIRONMENTS are defined as locations where there is exposure that may be incurred by persons who are aware of the potential for exposure, (i.e. as a result of employment or occupation). In general, occupational/controlled exposure limits are applicable to situations in which persons are exposed as a consequence of their employment, who have been made fully aware of the potential for exposure and can exercise control over their exposure. This exposure category is also applicable when the exposure is of a transient nature due to incidental passage through a location where the exposure levels may be higher than the general population/uncontrolled limits, but the exposed person is fully aware of the potential for exposure and can exercise control over his or her exposure by leaving the area or by some other appropriate means.

Table 10.1. Safety Limits for Partial Body Exposure [2]

	HUMAN EXPOSURE LIMITS	
	UNCONTROLLED ENVIRONMENT General Population (W/kg) or (mW/g)	CONTROLLED ENVIRONMENT General Population (W/kg) or (mW/g)
SPATIAL PEAK SAR 1 Brain	1.60	8.00
SPATIAL AVERAGE SAR 2 Whole Body	0.08	0.40
SPATIAL PEAK SAR 3 Hands, Feet, Ankles, Wrists	4.00	20.00

1 The Spatial Peak value of the SAR averaged over any 1 gram of tissue (defined as a tissue volume in the shape of a cube) and over the appropriate averaging time.
2 The Spatial Average value of the SAR averaged over the whole body.
3 The Spatial Peak value of the SAR averaged over any 10 grams of tissue (defined as a tissue volume in the shape of a cube) and over the appropriate averaging time.

© 2004 PCTEST Engineering Laboratory, Inc.

11. MEASUREMENT UNCERTAINTIES

a	b	c	d	e= f(d,k)	f	g	h = cxf/e	i = cxg/e	k
Uncertainty Component	**Sec.**	**Tol. (± %)**	**Prob. Dist.**	**Div.**	**c_i (1 - g)**	**c_i (10 - g)**	**1 - g u_i (± %)**	**10 - g u_i (± %)**	**v_i**
Measurement System									
Probe Calibration	E1.1	11.4	N	$\sqrt{3}$	1	1	6.6	6.6	∞
Axial Isotropy	E1.2	3.4	R	$\sqrt{3}$	0.7	0.7	1.4	1.4	∞
Hemishperical Isotropy	E1.2	5.2	R	$\sqrt{3}$	1	1	3.0	3.0	∞
Boundary Effect	E1.3	4.7	R	$\sqrt{3}$	1	1	2.7	2.7	∞
Linearity	E1.4	5.9	R	$\sqrt{3}$	1	1	3.4	3.4	∞
System Detection Limits	E1.5	1.0	R	$\sqrt{3}$	1	1	0.6	0.6	∞
Readout Electronics	E1.6	1.0	R	1	1	1	1.0	1.0	∞
Response Time	E1.7	0.8	R	$\sqrt{3}$	1	1	0.5	0.5	∞
Integration Time	E1.8	1.7	R	$\sqrt{3}$	1	1	1.0	1.0	∞
RF Ambient Conditions	E5.1	1.2	R	$\sqrt{3}$	1	1	0.7	0.7	∞
Probe Positioner Mechanical Tolerance	E5.2	0.4	R	$\sqrt{3}$	1	1	0.2	0.2	∞
Probe Positioning w/ respect to Phantom Shell	E5.3	2.9	R	$\sqrt{3}$	1	1	1.7	1.7	∞
Extrapolation, Interpolation & Integration Algorithms for Max. SAR Evaluation	E4.2	3.9	R	$\sqrt{3}$	1	1	2.3	2.3	∞
Test Sample Related									
Test Sample Positioning	E3.2.1	10.6	R	$\sqrt{3}$	1	1	6.1	6.1	11
Device Holder Uncertainty	E3.1.1	8.7	R	$\sqrt{3}$	1	1	5.0	5.0	8
Output Power Variation - SAR drift measurement	5.6.2	5.0	R	$\sqrt{3}$	1	1	2.9	2.9	∞
Phantom & Tissue Parameters									
Phantom Uncertainty (Shape & Thickness tolerances)	E2.1	4.0	R	$\sqrt{3}$	1	1	2.3	2.3	∞
Liquid Conductivity - deviation from target values	E2.2	5.0	R	$\sqrt{3}$	0.7	0.5	2.0	1.4	∞
Liquid Conductivity - measurement uncertainty	E2.2	5.0	R	$\sqrt{3}$	0.7	0.5	2.0	1.4	∞
Liquid Permittivity - deviation from target values	E2.2	5.0	R	$\sqrt{3}$	0.6	0.5	1.7	1.4	∞
Liquid Permittivity - measurement uncertainty	E2.2	5.0	R	$\sqrt{3}$	0.6	0.5	1.7	1.4	∞
Combined Standard Uncertainty (k=1)			RSS				13.2	13.0	
Expanded Uncertainty (k=2) (95% CONFIDENCE LEVEL)							26.6	26.2	

The above measurement uncertainties are according to IEEE Std. IEEE Std. P1528 D1.2 (April 2003).

© 2004 PCTEST Engineering Laboratory, Inc.

12. SAR TEST DATA SUMMARY

See Measurement Result Data Pages

Procedures Used To Establish Test Signal

The device was placed into continuous transmit mode using the manufacturer's software. Such test signals offer a consistent means for testing SAR and are recommended for evaluating SAR [4].

Device Test Conditions

The device was powered through the battery. In order to verify that the device was tested at full power, conducted output power measurements were performed before and after each SAR measurement to confirm the output power. If a power deviation of more than 5% occurred, the test was repeated.

EUT Handset Reference Points

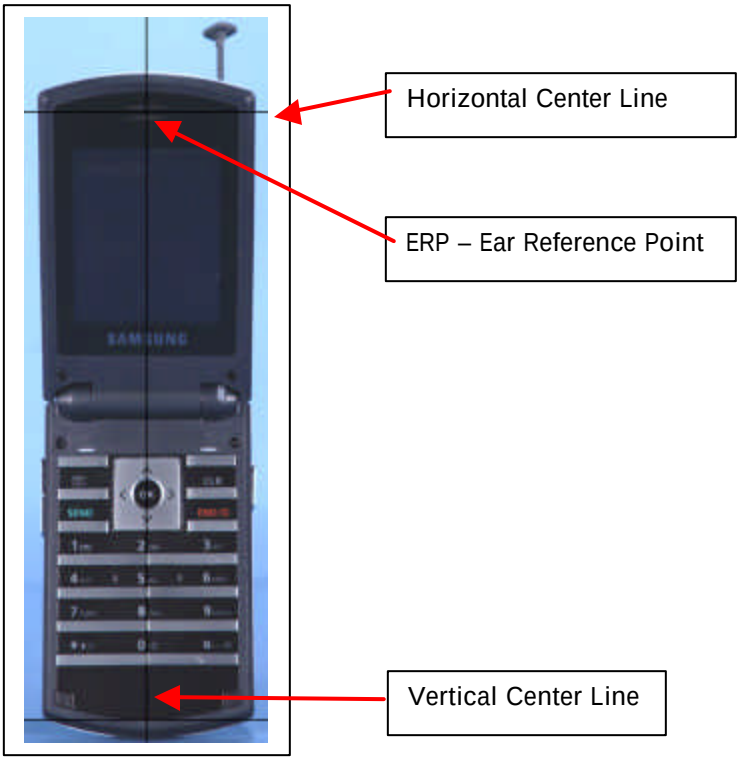

Figure 12.1 Handset Reference Points

© 2004 PCTEST Engineering Laboratory, Inc.

13. SAR TEST EQUIPMENT

Equipment Calibration

Table 13.1 Test Equipment Calibration

EQUIPMENT SPECIFICATIONS		
Type	**Calibration Date**	**Serial Number**
CRS Robot F3	February 2003	RAF0134133
CRS C500C Motion Controller	February 2003	RCB0003303
CRS Teach Pendant (Joystick)	February 2003	STP0132231
DELL Computer, Pentium 4 1.6 GHz, Windows 2000™	February 2003	4PJZ111
E-Field Probe E-010	January 2003	PCT003
Right Ear SAM Phantom (P-SAM-R)	February 2003	94X-113
Left Ear SAM Phantom (P-SAM-L)	February 2003	94X-019
Flat SAM Phantom (P-SAM-FLAT)	February 2003	94X-097
IDX Robot End Effector (EE-103-C)	February 2003	07111223
IDX Probe Amplifier	February 2003	07111113
Validation Dipole D-835S	December 2003	PCT640
Validation Dipole D-1900S	December 2003	PCT641
Brain Equivalent Matter (835MHz)	December 2003	PCTBEM101
Brain Equivalent Matter (1900MHz)	December 2003	PCTBEM301
Muscle Equivalent Matter (835MHz)	December 2003	PCTMEM201
Muscle Equivalent Matter (1900MHz)	December 2003	PCTMEM401
Amplifier Research 5S1G4 Power Amp	January 2003	PCT540
Agilent E8241A (250kHz ~ 20GHz) Signal Generator	November 2003	US42110432
HP-8753E (30kHz ~ 6GHz) Network Analyzer	January 2003	PCT552
HP85070B Dielectric Probe Kit	January 2003	PCT501
Ambient Noise/Reflection, etc. <12mW/kg/<3%of SAR	January 2003	Anechoic Room PCT01

NOTE:
Dipole Validation measurement was performed by PCTEST Lab before each test. The brain simulating material is calibrated by PCTEST using the dielectric probe system and network analyzer to determine the conductivity and permittivity (dielectric constant) of the brain-equivalent material.

© 2004 PCTEST Engineering Laboratory, Inc.

14. CONCLUSION

Measurement Conclusion

The SAR measurement indicates that the EUT complies with the RF radiation exposure limits of the FCC. These measurements are taken to simulate the RF effects exposure under worst-case conditions. Precise laboratory measures were taken to assure repeatability of the tests. The tested device complies with the requirements in respect to all parameters subject to the test. The test results and statements relate only to the item(s) tested. Please note that the absorption and distribution of electromagnetic energy in the body are very complex phenomena that depend on the mass, shape, and size of the body, the orientation of the body with respect to the field vectors, and the electrical properties of both the body and the environment. Other variables that may play a substantial role in possible biological effects are those that characterize the environment (e.g. ambient temperature, air velocity, relative humidity, and body insulation) and those that characterize the individual (e.g. age, gender, activity level, debilitation, or disease). Because innumerable factors may interact to determine the specific biological outcome of an exposure to electromagnetic fields, any protection guide shall consider maximal amplification of biological effects as a result of field-body interactions, environmental conditions, and physiological variables.[3]

© 2004 PCTEST Engineering Laboratory, Inc.

15. REFERENCES

[1] Federal Communications Commission, ET Docket 93-62, Guidelines for Evaluating the Environmental Effects of Radiofrequency Radiation, Aug. 1996.

[2] ANSI/IEEE C95.1 - 1991, *American National Standard safety levels with respect to human exposure to radio frequency electromagnetic fields, 300kHz to 100GHz*, New York: IEEE, Aug. 1992.

[3] ANSI/IEEE C95.3 - 1991, *IEEE Recommended Practice for the Measurement of Potentially Hazardous Electromagnetic Fields - RF and Microwave*, New York: IEEE, 1992.

[4] Federal Communications Commission, OET Bulletin 65 (Edition 97-01), Supplement C (Edition 01-01), *Evaluating Compliance with FCC Guidelines for Human Exposure to Radiofrequency Electromagnetic Fields*, July 2001.

[5] IEEE Standards Coordinating Committee 34 – IEEE Std. IEEE Std. P1528 D1.2 (April 2003), *Draft Recommended Practice for Determining the Peak Spatial-Average Specific Absorption Rate (SAR) in the Human Body Due to Wireless Communications Devices: Experimental Techniques.*

[6] NCRP, National Council on Radiation Protection and Measurements, *Biological Effects and Exposure Criteria for RadioFrequency Electromagnetic Fields*, NCRP Report No. 86, 1986. Reprinted Feb. 1995.

[7] V. Hombach, K. Meier, M. Burkhardt, E. Kuhn, N. Kuster, *The Dependence of EM Energy Absorption upon Human Head Modeling at 900 MHz*, IEEE Transaction on Microwave Theory and Techniques, vol. 44 no. 10, Oct. 1996, pp. 1865-1873.

[8] N. Kuster and Q. Balzano, *Energy absorption mechanism by biological bodies in the near field of dipole antennas above 300MHz*, IEEE Transaction on Vehicular Technology, vol. 41, no. 1, Feb. 1992, pp. 17-23.

[9] G. Hartsgrove, A. Kraszewski, A. Surowiec, *Simulated Biological Materials for Electromagnetic Radiation Absorption Studies*, University of Ottawa, Bioelectromagnetics, Canada: 1987, pp. 29-36.

[10] Q. Balzano, O. Garay, T. Manning Jr., *Electromagnetic Energy Exposure of Simulated Users of Portable Cellular Telephones*, IEEE Transactions on Vehicular Technology, vol. 44, no.3, Aug. 1995.

[11] W.H. Press, S.A. Teukolsky, W.T. Vetterling, and B.P. Flannery, *Numerical Recepies in C,* The Art of Scientific Computing, Second edition, Cambridge University Press, 1992.

[12] Federal Communications Commission, OET Bulletin 65, Evaluating Compliance with FCC Guidelines for Human Exposure to Radiofrequency Electromagnetic Fields. Supplement C, Dec. 1997.

[13] CENELEC CLC/SC111B, European Prestandard (prENV 50166-2), Human Exposure to Electromagnetic Fields High-frequency: 10kHz-300GHz, Jan. 1995.

© 2004 PCTEST Engineering Laboratory, Inc.

EXHIBIT A. SYSTEM VERIFICATION

Tissue Verification

Table A.1 Simulated Tissue Verification

MEASURED TISSUE PARAMETERS									
Date(s)	12/09/03	835MHz Brain		835MHz Muscle		1900MHz Brain		1900MHz Muscle	
Liquid Temperature (°C)	21.4	Target	Measured	Target	Measured	Target	Measured	Target	Measured
Dielectric Constant: ε		41.50	40.21	55.20	53.49	40.00	40.21	53.30	52.16
Conductivity: σ		0.900	0.890	0.970	0.970	1.400	1.390	1.520	1.580

Test System Validation

Prior to assessment, the system is verified to the ±10% of the specifications at 835 MHz and 1900 MHz by using the system validation kits. (Graphic Plots Attached)

Table A.2 System Validation

System Validation TARGET & MEASURED							
Date:	**Amb. Temp (℃)**	**Liquid Temp (℃)**	**Input Power (W)**	**Tissue**	**Targeted SAR_{1g} (mW/g)**	**Measured SAR_{1g} (mW/g)**	**Deviation (%)**
12/08/03	22.1	20.4	**0.250**	**835MHz Brain**	**2.375**	**2.37**	- 0.26
12/09/03	22.1	20.4				**2.56**	7.97
12/09/03	22.1	20.4	**0.100**	**1900MHz Brain**	**3.970**	**4.06**	2.34
12/10/03	22.1	20.4				**3.88**	- 2.16

Figure A.0 Dipole Validation Test Setup

© 2004 PCTEST Engineering Laboratory, Inc.

EXHIBIT A. SAR DATA SUMMARY

Mixture Type: **835MHz Brain**

A.1 MEASUREMENT RESULTS (CDMA Right Head SAR – Touch)

FREQUENCY		Modulation	Begin / End POWER‡			Device Test Position	Antenna Position	SAR (W/kg)
MHz	Ch.		(dBm)		Battery			
824.70	1013	CDMA	25.51	25.50	Standard	Cheek / Touch	In	1.22
824.70	1013	CDMA	25.43	25.35	Standard	Cheek / Touch	Out	1.44
835.89	363	CDMA	25.43	25.23	Standard	Cheek / Touch	In	1.41
835.89	363	CDMA	25.53	25.51	Standard	Cheek / Touch	Out	**1.45**
848.31	777	CDMA	25.51	25.48	Standard	Cheek / Touch	In	1.11
848.31	777	CDMA	25.56	25.39	Standard	Cheek / Touch	Out	1.37
835.89	363	CDMA	25.43	25.39	Extended	Cheek / Touch	In	1.41
835.89	363	CDMA	25.50	25.40	Extended	Cheek / Touch	Out	1.44
ANSI / IEEE C95.1 1992 - SAFETY LIMIT Spatial Peak Uncontrolled Exposure/General Population						**Brain 1.6 W/kg (mW/g) averaged over 1 gram**		

NOTES:

1. The test data reported are the worst-case SAR value with the antenna-head position set in a typical configuration. Test procedures used are according to FCC/OET Bulletin 65, Supp.C [July 2001].
2. All modes of operation were investigated, and worst-case results are reported.
3. Battery is fully charged for all readings. *Standard and Extended Batteries are options.*

	‡Power Measured	☒	Conducted	☐	ERP	☐	EIRP
4.	SAR Measurement System	☐	DASY4	☒	IDX		
	Phantom Configuration	☐	Left Head	☐	Flat Phantom	☒	Right Head
5.	SAR Configuration	☒	Head	☐	Body	☐	Hand
6.	Test Signal Call Mode	☒	Manu. Test Codes	☐	Base Station Simulator		

7. Tissue parameters and temperatures are listed on the SAR plots.
8. Liquid tissue depth is 15.1 cm. ± 0.1

Alfred Cirwithian
Vice President Engineering

Figure A.1 Right Head SAR Test Setup
-- Cheek / Touch Position --

© 2004 PCTEST Engineering Laboratory, Inc.

EXHIBIT A. SAR DATA SUMMARY

Mixture Type: **835MHz Brain**

A.2 MEASUREMENT RESULTS (CDMA Right Head SAR – Tilt)

FREQUENCY		Modulation	Begin / End POWER‡			Device Test Position	Antenna Position	SAR (W/kg)
MHz	Ch.		(dBm)		Battery			
835.89	363	CDMA	25.53	25.43	Standard	Ear / 15° Tilt	In	**0.47**
835.89	363	CDMA	25.48	25.52	Standard	Ear / 15° Tilt	Out	0.38
ANSI / IEEE C95.1 1992 - SAFETY LIMIT Spatial Peak Uncontrolled Exposure/General Population						**Brain 1.6 W/kg (mW/g)** averaged over 1 gram		

NOTES:

1. The test data reported are the worst-case SAR value with the antenna-head position set in a typical configuration. Test procedures used are according to FCC/OET Bulletin 65, Supp.C [July 2001].
2. All modes of operation were investigated, and worst-case results are reported.
3. Battery is fully charged for all readings. *Standard and Extended Batteries are options.*

‡Power Measured	☒ Conducted	☐ ERP	☐ EIRP	
4. SAR Measurement System	☐ DASY4	☒ IDX		
Phantom Configuration	☐ Left Head	☐ Flat Phantom	☒ Right Head	
5. SAR Configuration	☒ Head	☐ Body	☐ Hand	
6. Test Signal Call Mode	☒ Manu. Test Codes	☐ Base Station Simulator		

7. Tissue parameters and temperatures are listed on the SAR plots.
8. Liquid tissue depth is 15.1 cm. ± 0.1
9. Justification for reduced test configurations: Per FCC/OET Bulletin 65 Supplement C (July, 2001), if the SAR measured at the middle channel for each test configuration (left, right, cheek/touch, tilt/ear, extended and retracted) is at least 3.0 dB lower than the SAR limit, testing at the high and low channels is optional for such test configuration(s).

Alfred Cirwithian
Vice President Engineering

Figure A.2 Right Head SAR Test Setup
-- Ear / 15° Tilt Position --

© 2004 PCTEST Engineering Laboratory, Inc.

EXHIBIT A. SAR DATA SUMMARY (CONTINUED)

Mixture Type: **835MHz Brain**

A.3 MEASUREMENT RESULTS (CDMA Left Head SAR - Touch)

FREQUENCY		Modulation	Begin / End POWER‡			Device Test Position	Antenna Position	SAR (W/kg)
MHz	Ch.		(dBm)		Battery			
824.70	1013	CDMA	25.55	25.48	Standard	Cheek / Touch	In	1.31
824.70	1013	CDMA	25.53	25.41	Standard	Cheek / Touch	Out	1.42
835.89	363	CDMA	25.54	25.25	Standard	Cheek / Touch	In	**1.47**
835.89	363	CDMA	25.51	25.38	Standard	Cheek / Touch	Out	1.44
848.31	777	CDMA	25.61	25.48	Standard	Cheek / Touch	In	1.24
848.31	777	CDMA	25.58	25.38	Standard	Cheek / Touch	Out	1.44
835.89	363	CDMA	25.51	25.38	Extended	Cheek / Touch	In	1.45
835.89	363	CDMA	25.48	25.44	Extended	Cheek / Touch	Out	1.43
ANSI / IEEE C95.1 1992 - SAFETY LIMIT Spatial Peak Uncontrolled Exposure/General Population						**Brain 1.6 W/kg (mW/g) averaged over 1 gram**		

NOTES:

1. The test data reported are the worst-case SAR value with the antenna-head position set in a typical configuration. Test procedures used are according to FCC/OET Bulletin 65, Supp.C [July 2001].
2. All modes of operation were investigated, and worst-case results are reported.
3. Battery is fully charged for all readings. *Standard and Extended Batteries are options.*

‡Power Measured ☒ Conducted ☐ ERP ☐ EIRP

4. SAR Measurement System ☐ DASY4 ☒ IDX

Phantom Configuration ☒ Left Head ☐ Flat Phantom ☐ Right Head

5. SAR Configuration ☒ Head ☐ Body ☐ Hand
6. Test Signal Call Mode ☒ Manu. Test Codes ☐ Base Station Simulator
7. Tissue parameters and temperatures are listed on the SAR plots.
8. Liquid tissue depth is 15.1 cm. ± 0.1

Alfred Cirwithian
Vice President Engineering

Figure A.3 Left Head SAR Test Setup
-- Cheek / Touch Position --

© 2004 PCTEST Engineering Laboratory, Inc.

EXHIBIT A. SAR DATA SUMMARY (CONTINUED)

Mixture Type: **835MHz Brain**

A.4 MEASUREMENT RESULTS (CDMA Left Head SAR – Tilt)

FREQUENCY		Modulation	Begin / End POWER‡			Device Test Position	Antenna Position	SAR (W/kg)
MHz	Ch.		(dBm)		Battery			
835.89	363	CDMA	25.56	25.41	Standard	Ear / 15° Tilt	In	**0.54**
835.89	363	CDMA	25.48	25.44	Standard	Ear / 15° Tilt	Out	0.46
ANSI / IEEE C95.1 1992 - SAFETY LIMIT Spatial Peak Uncontrolled Exposure/General Population						**Brain 1.6 W/kg (mW/g)** averaged over 1 gram		

NOTES:

1. The test data reported are the worst-case SAR value with the antenna-head position set in a typical configuration. Test procedures used are according to FCC/OET Bulletin 65, Supp.C [July 2001].
2. All modes of operation were investigated, and worst-case results are reported.
3. Battery is fully charged for all readings. *Standard and Extended Batteries are options.*

	‡Power Measured	☒	Conducted	☐	ERP	☐ EIRP
4.	SAR Measurement System	☐	DASY4	☒	IDX	
	Phantom Configuration	☒	Left Head	☐	Flat Phantom	☐ Right Head
5.	SAR Configuration	☒	Head	☐	Body	☐ Hand
6.	Test Signal Call Mode	☒	Manu. Test Codes	☐	Base Station Simulator	

7. Tissue parameters and temperatures are listed on the SAR plots.
8. Liquid tissue depth is 15.1 cm. ± 0.1
9. Justification for reduced test configurations: Per FCC/OET Bulletin 65 Supplement C (July, 2001), if the SAR measured at the middle channel for each test configuration (left, right, cheek/touch, tilt/ear, extended and retracted) is at least 3.0 dB lower than the SAR limit, testing at the high and low channels is optional for such test configuration(s).

Alfred Cirwithian
Vice President Engineering

Figure A.4 Left Head SAR Test Setup -- Ear / 15° Tilt Position --

© 2004 PCTEST Engineering Laboratory, Inc.

EXHIBIT A. SAR DATA SUMMARY (CONTINUED)

Mixture Type: **1880MHz Brain**

A.5 MEASUREMENT RESULTS (PCS Right Head SAR – Touch)

FREQUENCY		Modulation	Begin / End POWER‡			Device Test Position	Antenna Position	SAR (W/kg)
MHz	Ch.		(dBm)		Battery			
1851.25	25	PCS CDMA	25.59	25.50	Standard	Cheek / Touch	In	**0.68**
1851.25	25	PCS CDMA	25.56	25.51	Standard	Cheek / Touch	Out	0.45
1880.00	600	PCS CDMA	25.55	25.38	Standard	Cheek / Touch	In	0.63
1880.00	600	PCS CDMA	25.57	25.56	Standard	Cheek / Touch	Out	0.31
1908.75	1175	PCS CDMA	25.56	25.34	Standard	Cheek / Touch	In	0.59
1908.75	1175	PCS CDMA	25.54	25.43	Standard	Cheek / Touch	Out	0.29
1851.25	25	PCS CDMA	25.47	25.46	Extended	Cheek / Touch	In	0.63
1851.25	25	PCS CDMA	25.50	25.48	Extended	Cheek / Touch	Out	0.44
ANSI / IEEE C95.1 1992 - SAFETY LIMIT Spatial Peak Uncontrolled Exposure/General Population						**Brain 1.6 W/kg (mW/g) **averaged over 1 gram		

NOTES:

1. The test data reported are the worst-case SAR value with the antenna-head position set in a typical configuration. Test procedures used are according to FCC/OET Bulletin 65, Supp.C [July 2001].
2. All modes of operation were investigated, and worst-case results are reported.
3. Battery is fully charged for all readings. *Standard and Extended Batteries are options.*

	‡Power Measured	☒	Conducted	☐	ERP	☐ EIRP
4.	SAR Measurement System	☐	DASY4	☒	IDX	
	Phantom Configuration	☐	Left Head	☐	Flat Phantom	☒ Right Head
5.	SAR Configuration	☒	Head	☐	Body	☐ Hand
6.	Test Signal Call Mode	☒	Manu. Test Codes	☐	Base Station Simulator	

7. Tissue parameters and temperatures are listed on the SAR plots.
8. Liquid tissue depth is 15.1 cm. ± 0.1

Alfred Cirwithian
Vice President Engineering

Figure A.5 Right Head SAR Test Setup
-- Cheek / Touch Position --

© 2004 PCTEST Engineering Laboratory, Inc.

EXHIBIT A. SAR DATA SUMMARY (CONTINUED)

Mixture Type: **1880MHz Brain**

A.6 MEASUREMENT RESULTS (PCS Right Head SAR – Tilt)

FREQUENCY		Modulation	Begin / End POWER‡			Device Test Position	Antenna Position	SAR (W/kg)
MHz	Ch.		(dBm)		Battery			
1880.00	600	PCS CDMA	25.51	25.44	Standard	Ear / 15° Tilt	In	**0.23**
1880.00	600	PCS CDMA	25.47	25.43	Standard	Ear / 15° Tilt	Out	0.04
ANSI / IEEE C95.1 1992 - SAFETY LIMIT Spatial Peak Uncontrolled Exposure/General Population						**Brain 1.6 W/kg (mW/g)** averaged over 1 gram		

NOTES:

1. The test data reported are the worst-case SAR value with the antenna-head position set in a typical configuration. Test procedures used are according to FCC/OET Bulletin 65, Supp.C [July 2001].
2. All modes of operation were investigated, and worst-case results are reported.
3. Battery is fully charged for all readings. *Standard and Extended Batteries are options.*

‡Power Measured ☒ Conducted ☐ ERP ☐ EIRP

4. SAR Measurement System ☐ DASY4 ☒ IDX

Phantom Configuration ☐ Left Head ☐ Flat Phantom ☒ Right Head

5. SAR Configuration ☒ Head ☐ Body ☐ Hand
6. Test Signal Call Mode ☒ Manu. Test Codes ☐ Base Station Simulator
7. Tissue parameters and temperatures are listed on the SAR plots.
8. Liquid tissue depth is 15.1 cm. ± 0.1
9. Justification for reduced test configurations: Per FCC/OET Bulletin 65 Supplement C (July, 2001), if the SAR measured at the middle channel for each test configuration (left, right, cheek/touch, tilt/ear, extended and retracted) is at least 3.0 dB lower than the SAR limit, testing at the high and low channels is optional for such test configuration(s).

Alfred Cirwithian
Vice President Engineering

Figure A.6 Right Head SAR Test Setup
-- Ear / 15° Tilt Position --

© 2004 PCTEST Engineering Laboratory, Inc.

EXHIBIT A. SAR DATA SUMMARY (CONTINUED)

Mixture Type: **1880MHz Brain**

A.7 MEASUREMENT RESULTS (PCS Left Head SAR - Touch)

FREQUENCY		Modulation	Begin / End POWER‡			Device Test Position	Antenna Position	SAR (W/kg)
MHz	Ch.		(dBm)		Battery			
1851.25	25	PCS CDMA	25.53	25.50	Standard	Cheek / Touch	In	**0.58**
1851.25	25	PCS CDMA	25.50	25.51	Standard	Cheek / Touch	Out	0.33
1880.00	600	PCS CDMA	25.50	25.41	Standard	Cheek / Touch	In	0.58
1880.00	600	PCS CDMA	25.55	25.56	Standard	Cheek / Touch	Out	0.30
1908.75	1175	PCS CDMA	25.49	25.40	Standard	Cheek / Touch	In	0.50
1908.75	1175	PCS CDMA	25.53	25.50	Standard	Cheek / Touch	Out	0.41
1851.25	25	PCS CDMA	25.53	25.55	Extended	Cheek / Touch	In	0.55
1851.25	25	PCS CDMA	25.51	25.48	Extended	Cheek / Touch	Out	0.33
ANSI / IEEE C95.1 1992 - SAFETY LIMIT Spatial Peak Uncontrolled Exposure/General Population						**Brain 1.6 W/kg (mW/g) **averaged over 1 gram		

NOTES:

1. The test data reported are the worst-case SAR value with the antenna-head position set in a typical configuration. Test procedures used are according to FCC/OET Bulletin 65, Supp.C [July 2001].
2. All modes of operation were investigated, and worst-case results are reported.
3. Battery is fully charged for all readings. *Standard and Extended Batteries are options.*

	‡Power Measured	☒	Conducted	☐	ERP	☐	EIRP
4.	SAR Measurement System	☐	DASY4	☒	IDX		
	Phantom Configuration	☒	Left Head	☐	Flat Phantom	☐	Right Head
5.	SAR Configuration	☒	Head	☐	Body	☐	Hand
6.	Test Signal Call Mode	☒	Manu. Test Codes	☐	Base Station Simulator		

7. Tissue parameters and temperatures are listed on the SAR plots.
8. Liquid tissue depth is 15.1 cm. ± 0.1

Alfred Cirwithian
Vice President Engineering

Figure A.7 Left Head SAR Test Setup
-- Cheek / Touch Position --

© 2004 PCTEST Engineering Laboratory, Inc.

EXHIBIT A. SAR DATA SUMMARY (CONTINUED)

Mixture Type: **1880MHz Brain**

A.8 MEASUREMENT RESULTS (PCS Left Head SAR – Tilt)

FREQUENCY		Modulation	Begin / End POWER‡			Device Test Position	Antenna Position	SAR (W/kg)
MHz	Ch.		(dBm)		Battery			
1880.00	600	PCS CDMA	25.58	25.50	Standard	Ear / 15° Tilt	In	**0.29**
1880.00	600	PCS CDMA	25.54	25.45	Standard	Ear / 15° Tilt	Out	0.08
ANSI / IEEE C95.1 1992 - SAFETY LIMIT Spatial Peak Uncontrolled Exposure/General Population						**Brain 1.6 W/kg (mW/g)** averaged over 1 gram		

NOTES:

1. The test data reported are the worst-case SAR value with the antenna-head position set in a typical configuration. Test procedures used are according to FCC/OET Bulletin 65, Supp.C [July 2001].
2. All modes of operation were investigated, and worst-case results are reported.
3. Battery is fully charged for all readings. *Standard and Extended Batteries are options.*

‡Power Measured ☒ Conducted ☐ ERP ☐ EIRP

4. SAR Measurement System ☐ DASY4 ☒ IDX

Phantom Configuration ☒ Left Head ☐ Flat Phantom ☐ Right Head

5. SAR Configuration ☒ Head ☐ Body ☐ Hand
6. Test Signal Call Mode ☒ Manu. Test Codes ☐ Base Station Simulator
7. Tissue parameters and temperatures are listed on the SAR plots.
8. Liquid tissue depth is 15.1 cm. ± 0.1
9. Justification for reduced test configurations: Per FCC/OET Bulletin 65 Supplement C (July, 2001), if the SAR measured at the middle channel for each test configuration (left, right, cheek/touch, tilt/ear, extended and retracted) is at least 3.0 dB lower than the SAR limit, testing at the high and low channels is optional for such test configuration(s).

Alfred Cirwithian
Vice President Engineering

Figure A.8 Left Head SAR Test Setup -- Ear / 15° Tilt Position --

© 2004 PCTEST Engineering Laboratory, Inc.

EXHIBIT A. SAR DATA SUMMARY (CONTINUED)

Mixture Type: **835MHz Muscle**

A.9 MEASUREMENT RESULTS (CDMA Body SAR w/ Belt-clip)

FREQUENCY		Modulation	Begin / End POWER‡			Separation Distance (cm)‡‡	Antenna Position	SAR (W/kg)
MHz	Ch.		(dBm)		Battery			
824.70	1013	CDMA	25.52	25.47	Standard	1.3 [w/ Belt-clip]	In	0.86
824.70	1013	CDMA	25.56	25.42	Standard	1.3 [w/ Belt-clip]	Out	**1.08**
835.89	363	CDMA	25.51	25.48	Standard	1.3 [w/ Belt-clip]	In	1.00
835.89	363	CDMA	25.53	25.45	Standard	1.3 [w/ Belt-clip]	Out	0.96
848.31	777	CDMA	25.56	25.51	Standard	1.3 [w/ Belt-clip]	In	0.71
848.31	777	CDMA	25.55	25.50	Standard	1.3 [w/ Belt-clip]	Out	1.05
824.70	1013	CDMA	25.51	25.47	Extended	1.5 [w/ Belt-clip]	In	0.68
824.70	1013	CDMA	25.50	25.45	Extended	1.5 [w/ Belt-clip]	Out	0.86
ANSI / IEEE C95.1 1992 - SAFETY LIMIT Spatial Peak Uncontrolled Exposure/General Population						**Muscle 1.6 W/kg (mW/g)** averaged over 1 gram		

NOTES:

1. The test data reported are the worst-case SAR value with the antenna-head position set in a typical configuration. Test procedures used are according to FCC/OET Bulletin 65, Supp.C [July 2001].
2. All modes of operation were investigated, and worst-case results are reported.
3. Battery is fully charged for all readings. *Standard and Extended Batteries are options.*

	‡Power Measured	☒	Conducted	☐	ERP	☐	EIRP
4.	SAR Measurement System	☐	DASY4	☒	IDX		
	Phantom Configuration	☐	Left Head	☒	Flat Phantom	☐	Right Head
5.	SAR Configuration	☐	Head	☒	Body	☐	Hand
6.	Test Signal Call Mode	☒	Manu. Test Codes	☐	Base Station Simulator		
7.	‡‡Test Configuration	☒	With Belt-clip	☐	Without Belt-clip		

8. Tissue parameters and temperatures are listed on the SAR plots.
9. Both sides of the phone were tested and the worst-case side is reported.
10. Liquid tissue depth is 15.1 cm. ± 0.1

Alfred Cirwithian
Vice President Engineering

Figure A.9 Body SAR Test Setup
-- w/ Belt-clip --

© 2004 PCTEST Engineering Laboratory, Inc.

EXHIBIT A. SAR DATA SUMMARY (CONTINUED)

Mixture Type: **1880 MHz Muscle**

A.10 MEASUREMENT RESULTS (PCS Body SAR w/ Belt-clip)

FREQUENCY		Modulation	Begin / End POWER‡			Separation Distance (cm)‡‡	Antenna Position	SAR (W/kg)
MHz	Ch.		(dBm)		Battery			
1851.25	25	PCS CDMA	25.54	25.41	Standard	1.3 [w/ Belt-clip]	In	**0.68**
1851.25	25	PCS CDMA	25.51	25.45	Standard	1.3 [w/ Belt-clip]	Out	0.20
1880.00	600	PCS CDMA	25.50	25.44	Standard	1.3 [w/ Belt-clip]	In	0.52
1880.00	600	PCS CDMA	25.53	25.50	Standard	1.3 [w/ Belt-clip]	Out	0.21
1908.75	1175	PCS CDMA	25.56	25.40	Standard	1.3 [w/ Belt-clip]	In	0.56
1851.25	25	PCS CDMA	25.50	25.40	Standard	1.3 [w/ Belt-clip]	Out	0.23
1851.25	25	PCS CDMA	25.53	25.41	Extended	1.3 [w/ Belt-clip]	In	0.52
1851.25	25	PCS CDMA	25.50	25.40	Extended	1.3 [w/ Belt-clip]	Out	0.29
ANSI / IEEE C95.1 1992 - SAFETY LIMIT Spatial Peak Uncontrolled Exposure/General Population						**Muscle 1.6 W/kg (mW/g)** averaged over 1 gram		

NOTES:

1. The test data reported are the worst-case SAR value with the antenna-head position set in a typical configuration. Test procedures used are according to FCC/OET Bulletin 65, Supp.C [July 2001].
2. All modes of operation were investigated, and worst-case results are reported.
3. Battery is fully charged for all readings. *Standard and Extended Batteries are options.*

	‡Power Measured	☒	Conducted	☐	ERP	☐	EIRP
4.	SAR Measurement System	☐	DASY4	☒	IDX		
	Phantom Configuration	☐	Left Head	☒	Flat Phantom	☐	Right Head
5.	SAR Configuration	☐	Head	☒	Body	☐	Hand
6.	Test Signal Call Mode	☒	Manu. Test Codes	☐	Base Station Simulator		
7.	‡‡Test Configuration	☒	With Belt-clip	☐	Without Belt-clip		

8. Tissue parameters and temperatures are listed on the SAR plots.
9. Both sides of the phone were tested and the worst-case side is reported.
10. Liquid tissue depth is 15.1 cm. ± 0.1

Alfred Cirwithian
Vice President Engineering

Figure A.10 Body SAR Test Setup
-- w/ Belt-clip --

© 2004 PCTEST Engineering Laboratory, Inc.