ATTACHMENT D – TEST PLOTS

© 2001 PCTEST Lab

PCTEST Engineering Lab.

SPECTRUM ANALYZER PRESENTATION

FCC ID:A3LSCHI355
SAMSUNG
DUAL-MODE Phone
FM Channel 0383
Operating Frequency: 836.490 MHz
Output Power : 26.0 dBm

Test Mode:Unmodulated Signal

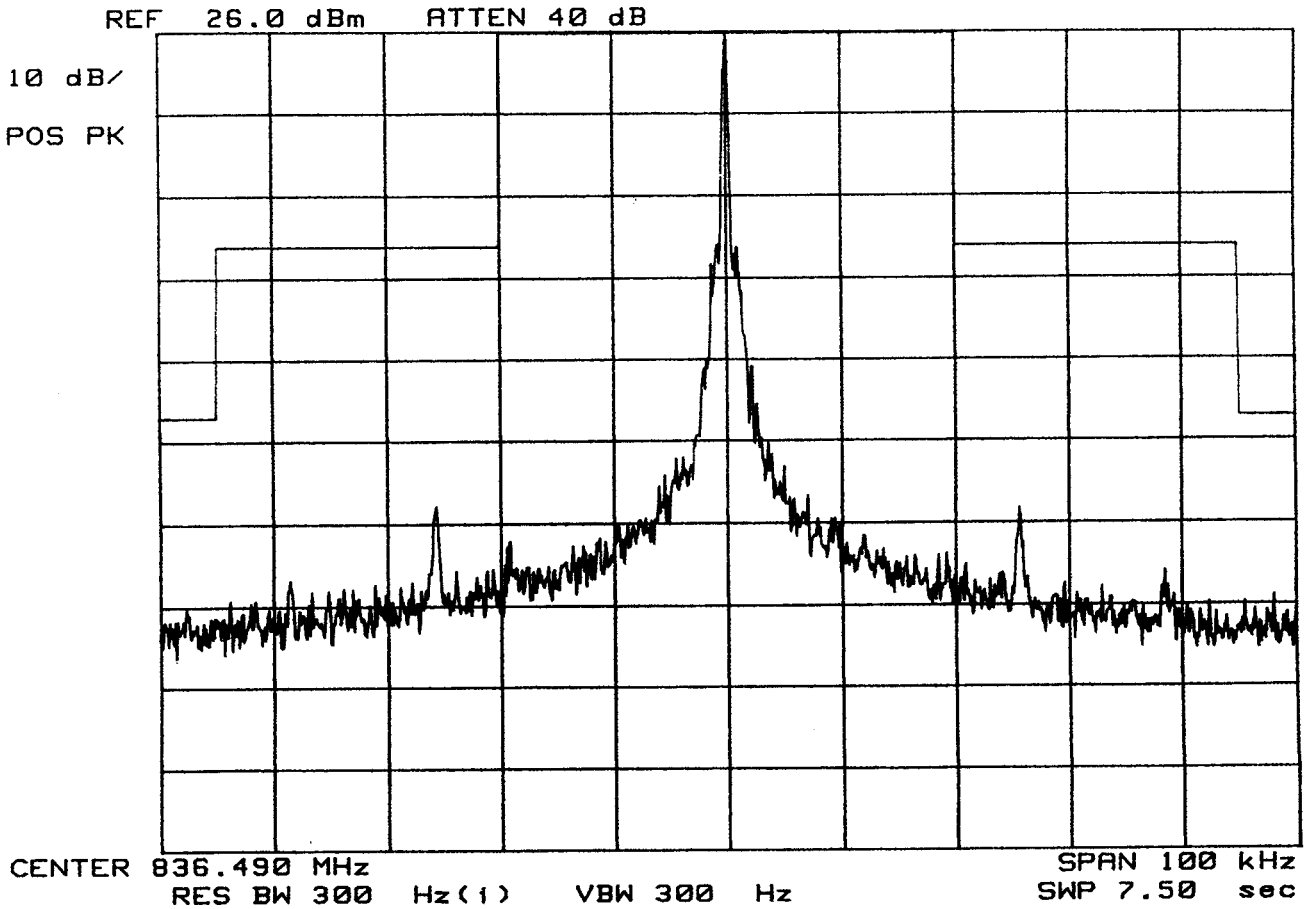

PCTEST Engineering Lab.

SPECTRUM ANALYZER PRESENTATION

FCC ID:A3LSCHI355
SAMSUNG
DUAL-MODE Phone
FM Channel 0383
Operating Frequency: 836.490 MHz
Output Power : 26.0 dBm

Test Mode:Voice

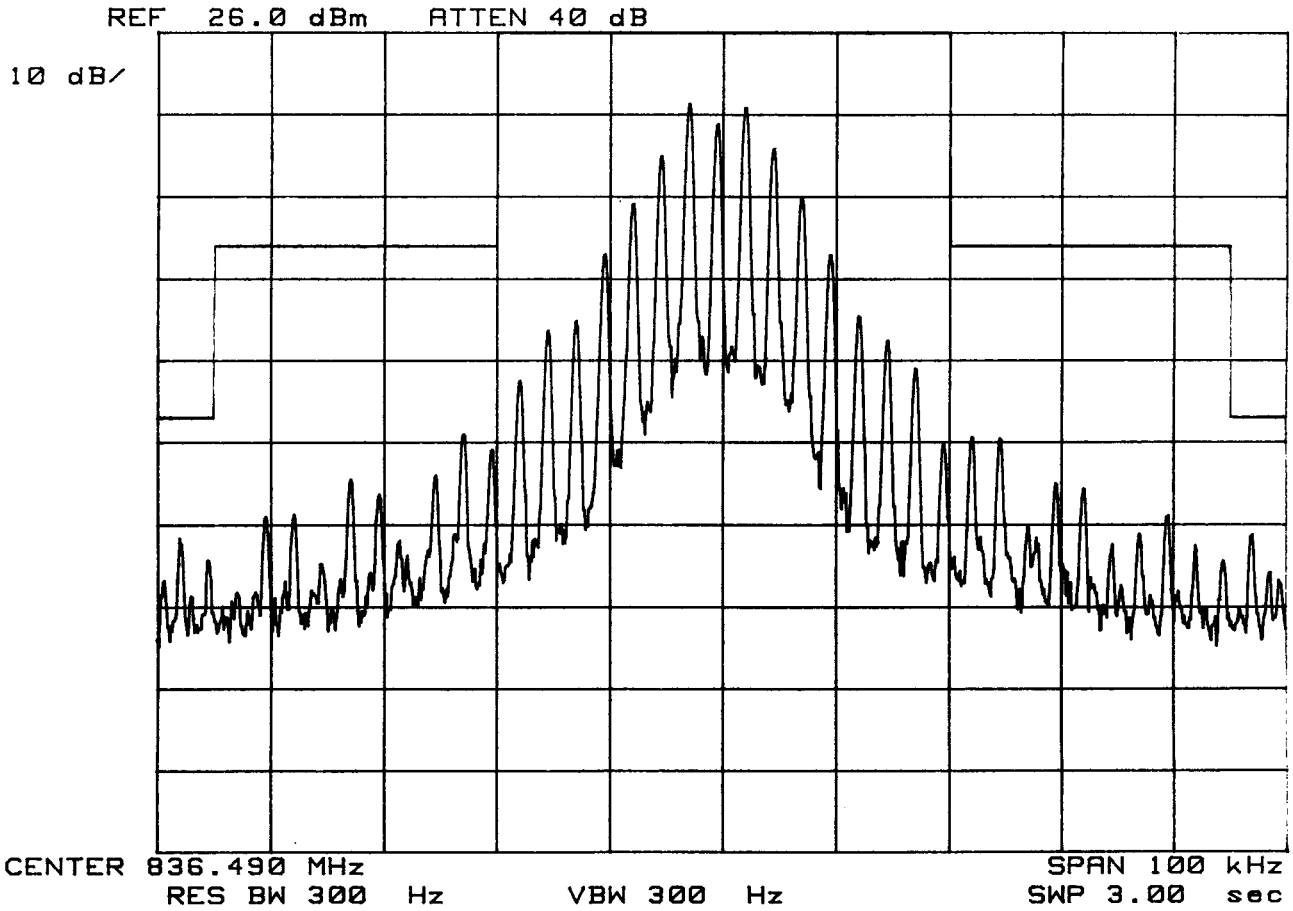

PCTEST Engineering Lab.

SPECTRUM ANALYZER PRESENTATION

FCC ID:A3LSCHI355
SAMSUNG
DUAL-MODE Phone
FM Channel 0383
Operating Frequency: 836.490 MHz
Output Power : 26.0 dBm

Test Mode:Wide Band Data

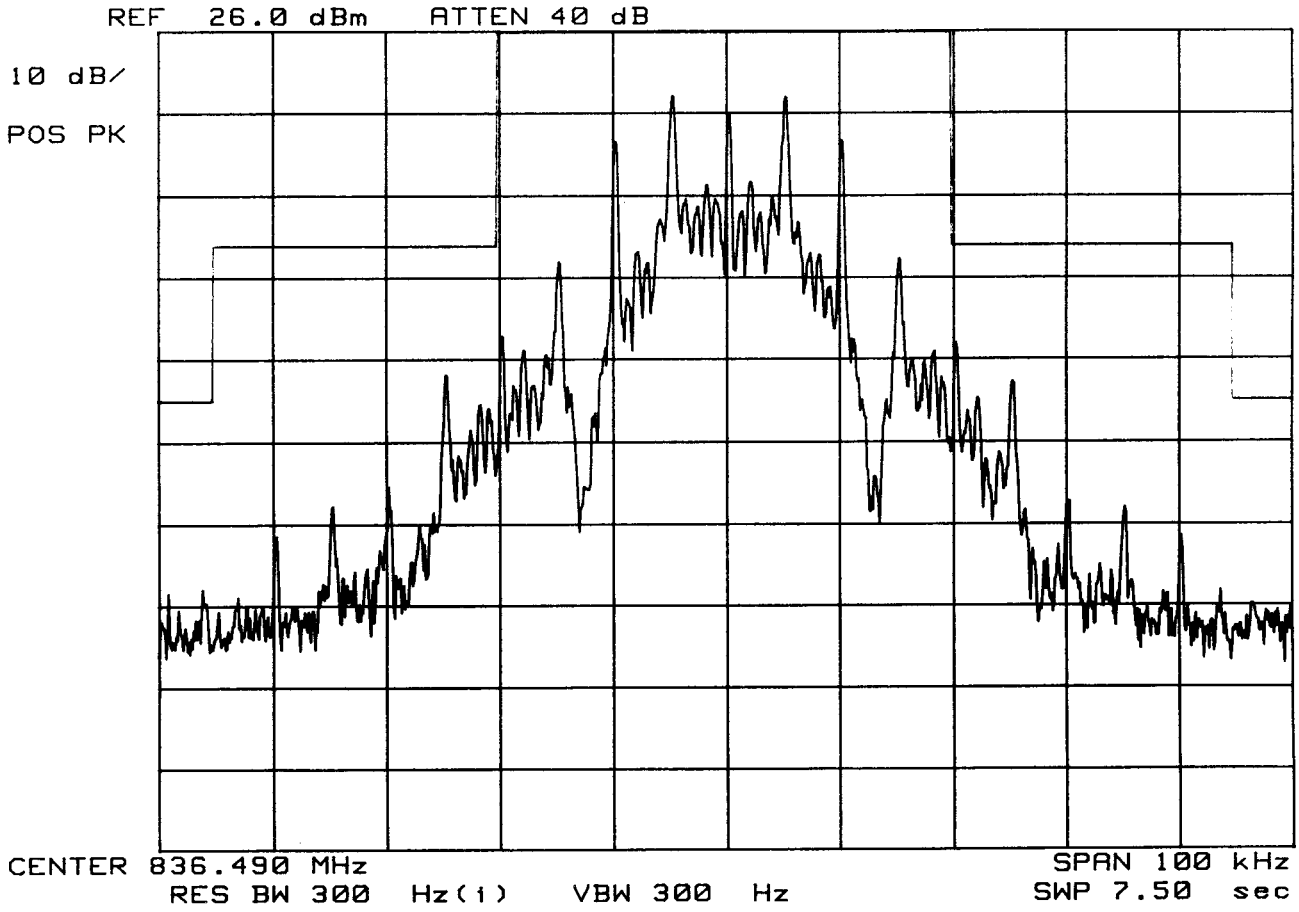

PCTEST Engineering Lab.

SPECTRUM ANALYZER PRESENTATION

FCC ID:A3LSCHI355
SAMSUNG
DUAL-MODE Phone
FM Channel 0383
Operating Frequency: 836.490 MHz
Output Power : 26.0 dBm

Test Mode:SAT

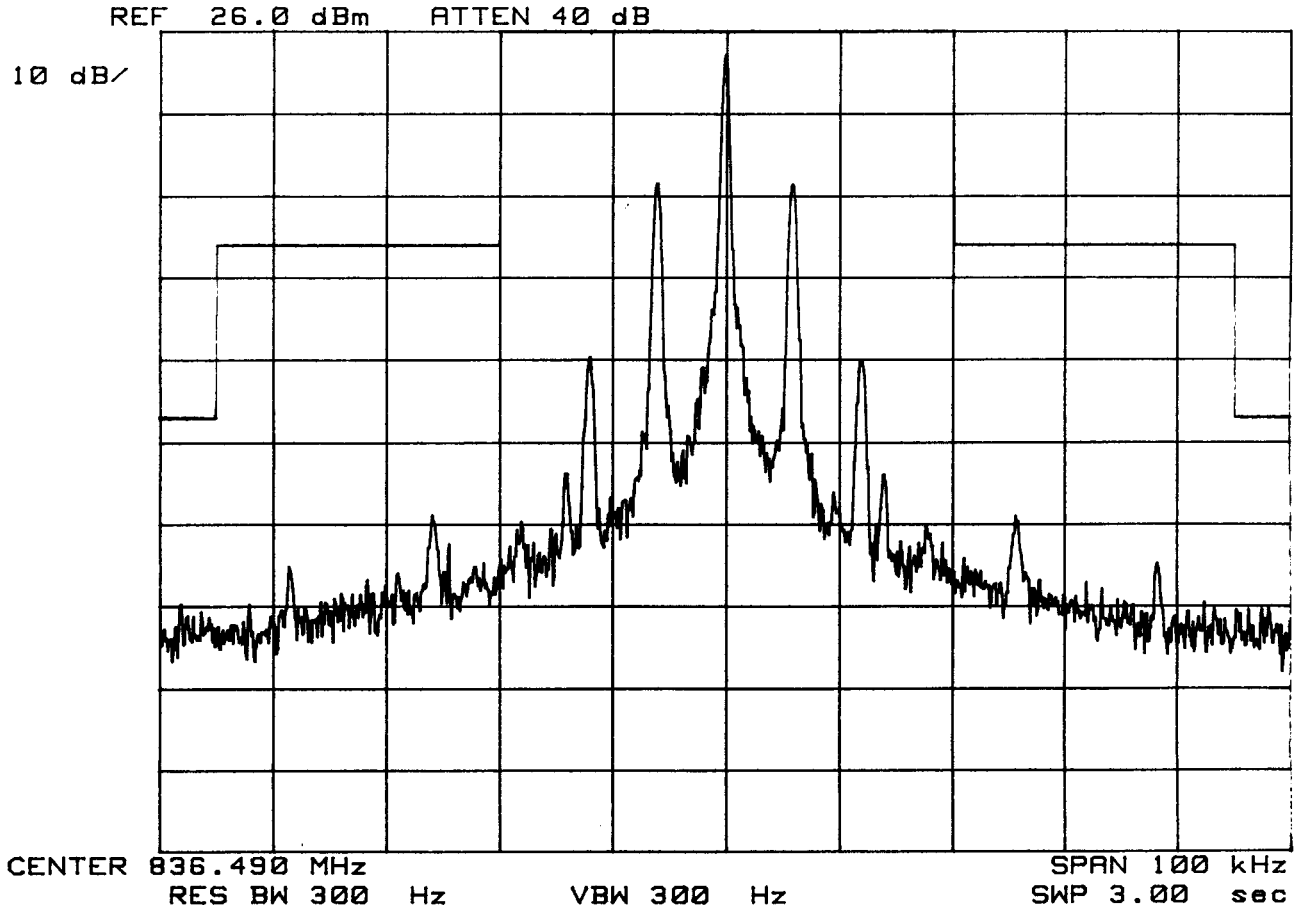

PCTEST Engineering Lab.

SPECTRUM ANALYZER PRESENTATION

FCC ID:A3LSCHI355
SAMSUNG
DUAL-MODE Phone
FM Channel 0383
Operating Frequency: 836.490 MHz
Output Power : 26.0 dBm

Test Mode:ST

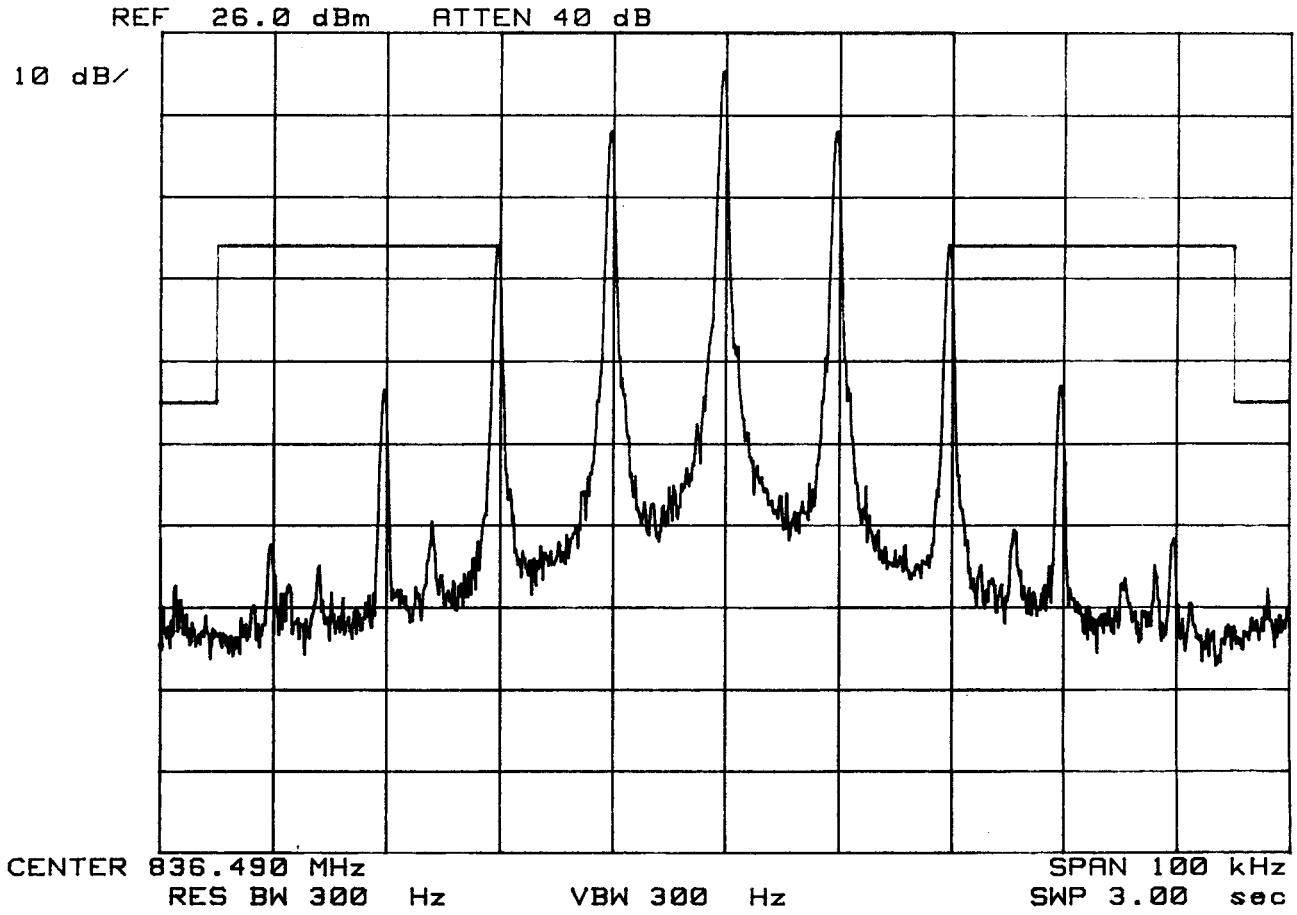

PCTEST Engineering Lab.

SPECTRUM ANALYZER PRESENTATION

FCC ID:A3LSCHI355
SAMSUNG
DUAL-MODE Phone
FM Channel 0383
Operating Frequency: 836.490 MHz
Output Power : 26.0 dBm

Test Mode:SAT + ST

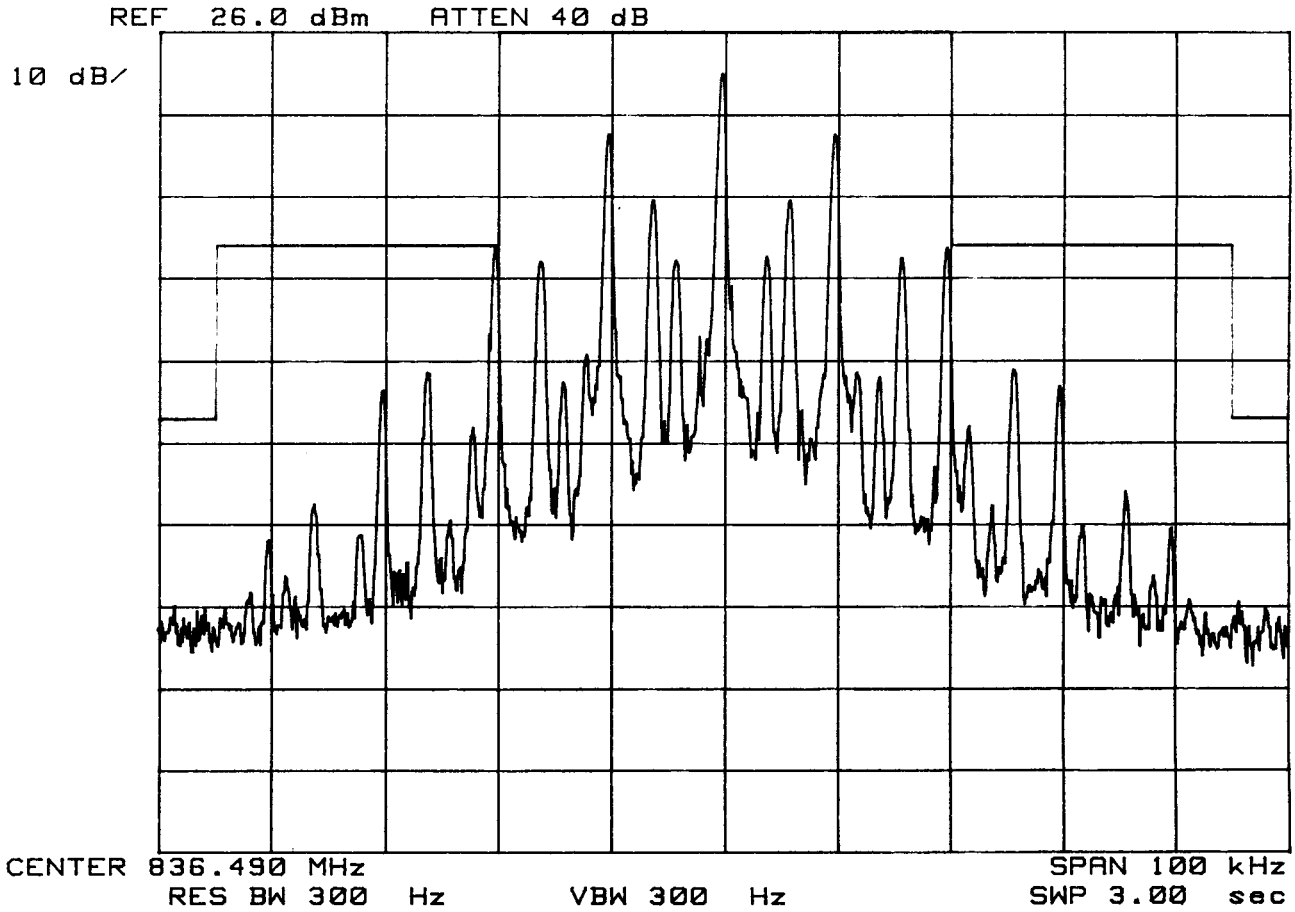

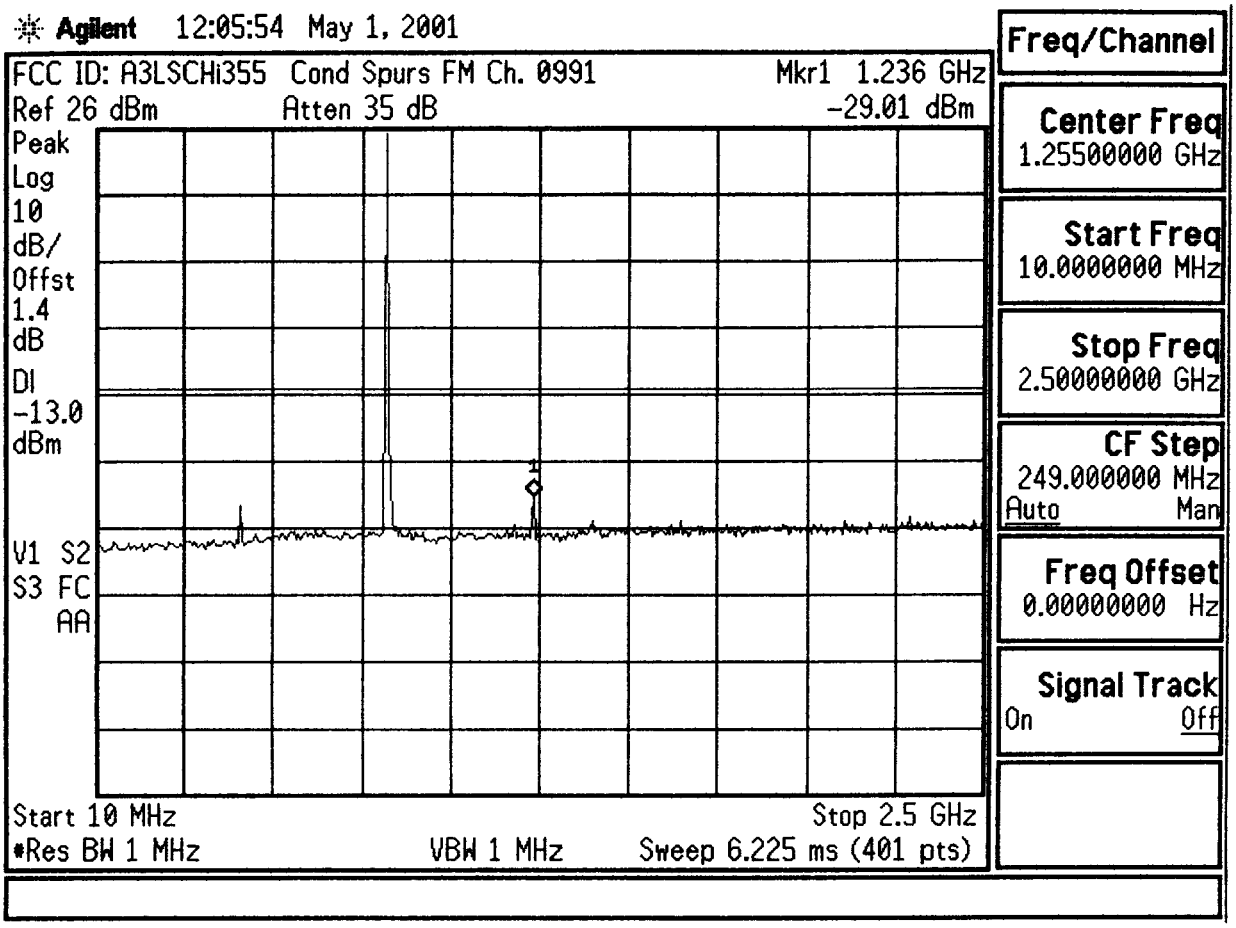
Agilent 12:05:54 May 1, 2001
FCC ID: A3LSCHi355 Cond Spurs FM Ch. 0991
Mkr1 1.236 GHz
Ref 26 dBm
Atten 35 dB
-29.01 dBm
Peak
Log
10
dB/
Offst
1.4
dB
Dl
-13.0
dBm
V1 S2
S3 FC
AA
Start 10 MHz
Stop 2.5 GHz
#Res BW 1 MHz
VBW 1 MHz
Sweep 6.225 ms (401 pts)
Freq/Channel
Center Freq
1.25500000 GHz
Start Freq
10.0000000 MHz
Stop Freq
2.50000000 GHz
CF Step
249.000000 MHz
Auto
Man
Freq Offset
0.00000000 Hz
Signal Track
On
Off

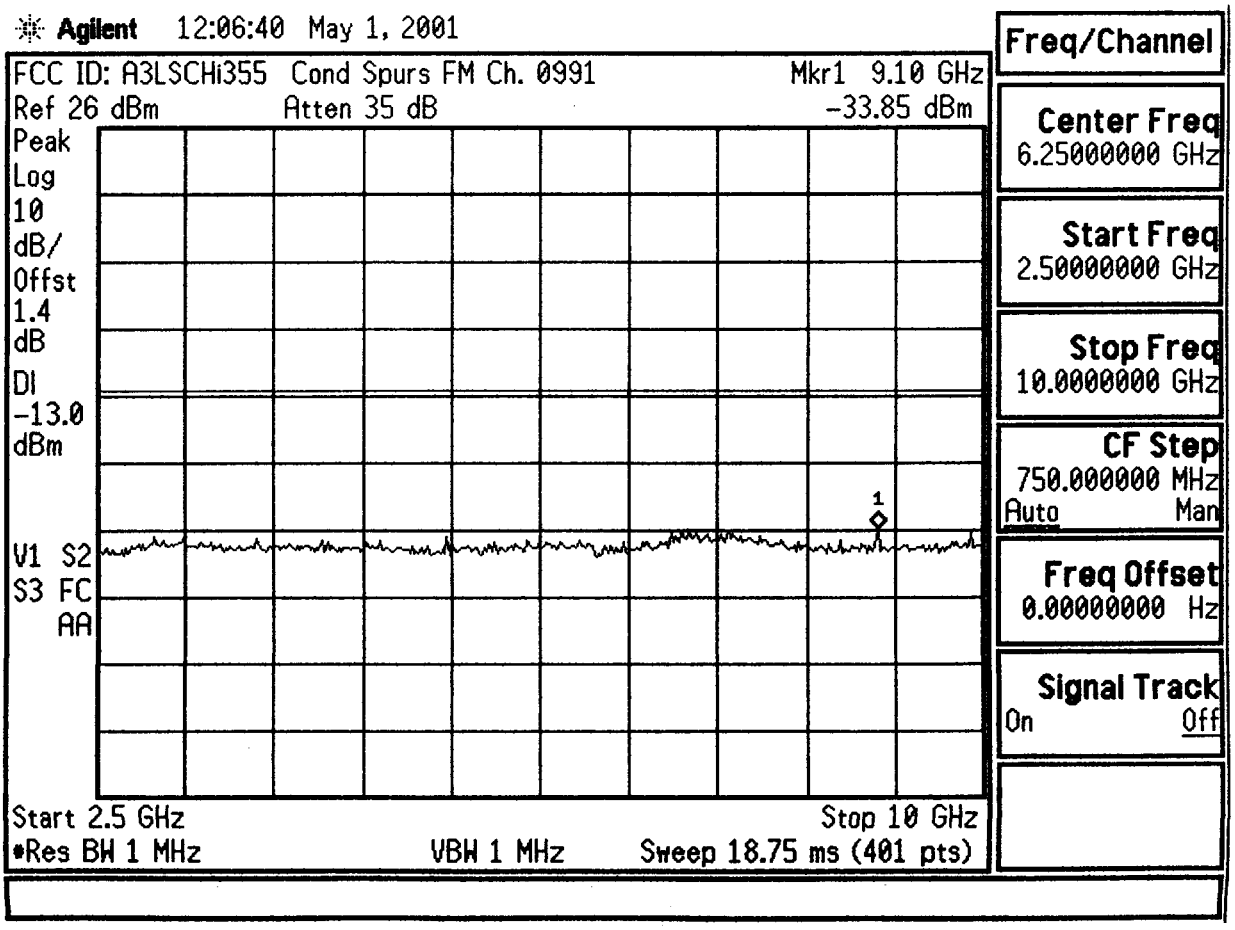
Agilent 12:06:40 May 1, 2001
FCC ID: A3LSCHi355 Cond Spurs FM Ch. 0991
Mkr1 9.10 GHz
Ref 26 dBm
Atten 35 dB
-33.85 dBm
Peak
Log
10
dB/
Offst
1.4
dB
Dl
-13.0
dBm
V1 S2
S3 FC
AA
Start 2.5 GHz
Stop 10 GHz
#Res BW 1 MHz
VBW 1 MHz
Sweep 18.75 ms (401 pts)
Freq/Channel
Center Freq
6.25000000 GHz
Start Freq
2.50000000 GHz
Stop Freq
10.0000000 GHz
CF Step
750.000000 MHz
Auto
Man
Freq Offset
0.00000000 Hz
Signal Track
On
Off

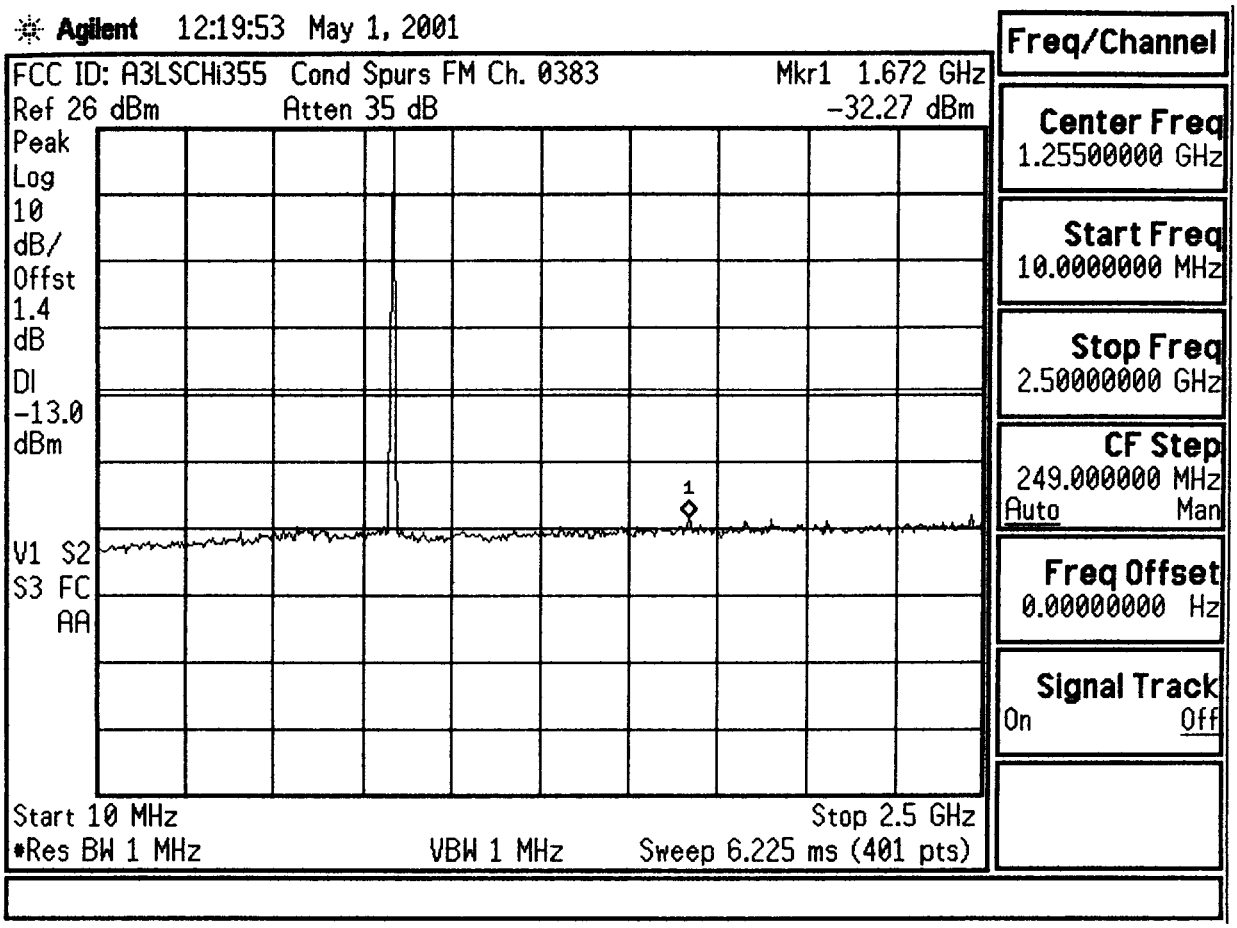
Agilent 12:19:53 May 1, 2001
FCC ID: A3LSCHi355 Cond Spurs FM Ch. 0383
Mkr1 1.672 GHz
Ref 26 dBm
Atten 35 dB
-32.27 dBm
Peak
Log
10
dB/
Offst
1.4
dB
Dl
-13.0
dBm
1
V1 S2
S3 FC
AA
Start 10 MHz
Stop 2.5 GHz
*Res BW 1 MHz
VBW 1 MHz
Sweep 6.225 ms (401 pts)
Freq/Channel
Center Freq
1.25500000 GHz
Start Freq
10.0000000 MHz
Stop Freq
2.50000000 GHz
CF Step
249.000000 MHz
Auto
Man
Freq Offset
0.00000000 Hz
Signal Track
On
Off

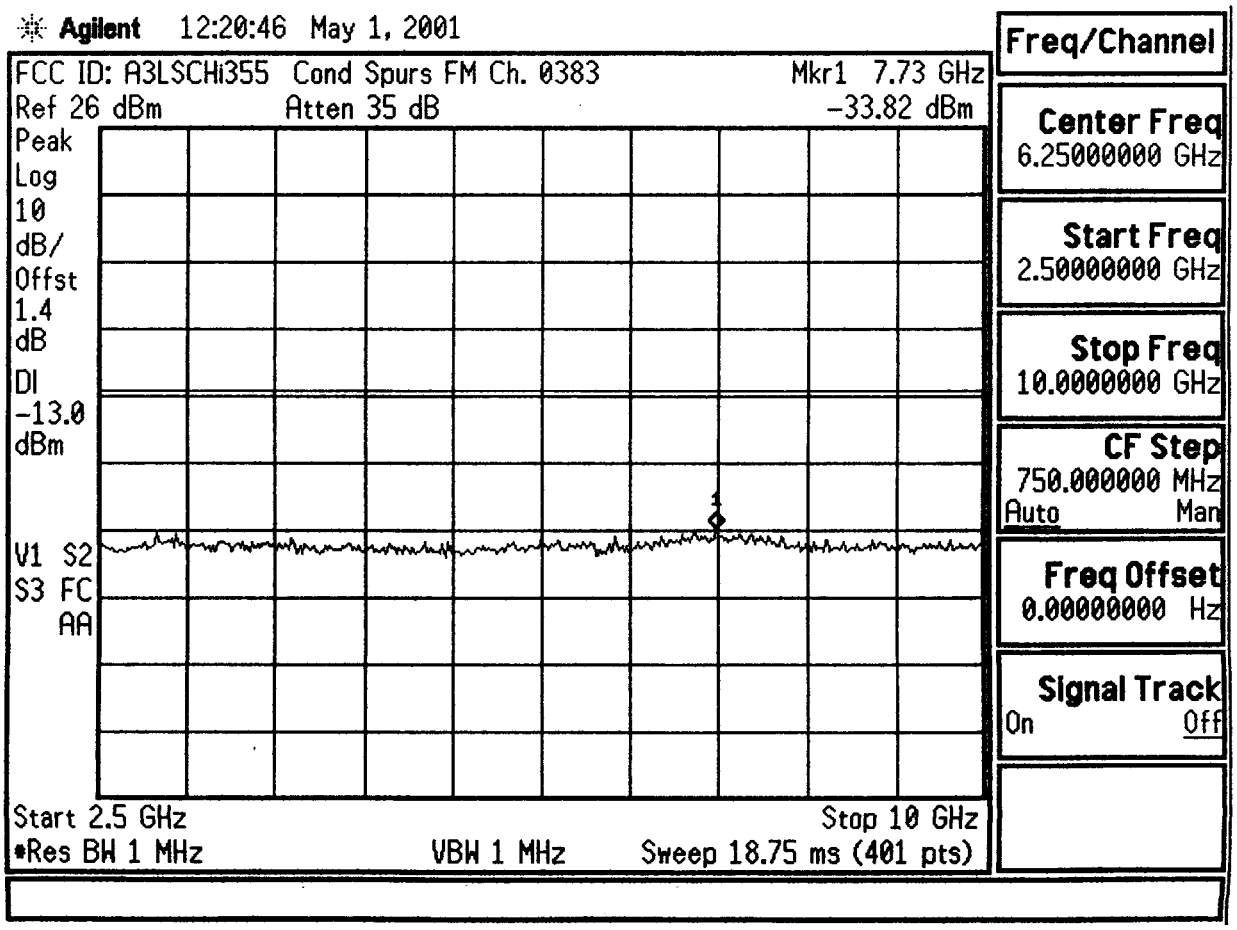
Agilent 12:20:46 May 1, 2001
FCC ID: A3LSCHi355 Cond Spurs FM Ch. 0383
Mkr1 7.73 GHz
Ref 26 dBm
Atten 35 dB
-33.82 dBm
Peak
Log
10
dB/
Offst
1.4
dB
Dl
-13.0
dBm
1
V1 S2
S3 FC
AA
Start 2.5 GHz
Stop 10 GHz
*Res BW 1 MHz
VBW 1 MHz
Sweep 18.75 ms (401 pts)
Freq/Channel
Center Freq
6.25000000 GHz
Start Freq
2.50000000 GHz
Stop Freq
10.0000000 GHz
CF Step
750.000000 MHz
Auto
Man
Freq Offset
0.00000000 Hz
Signal Track
On
Off

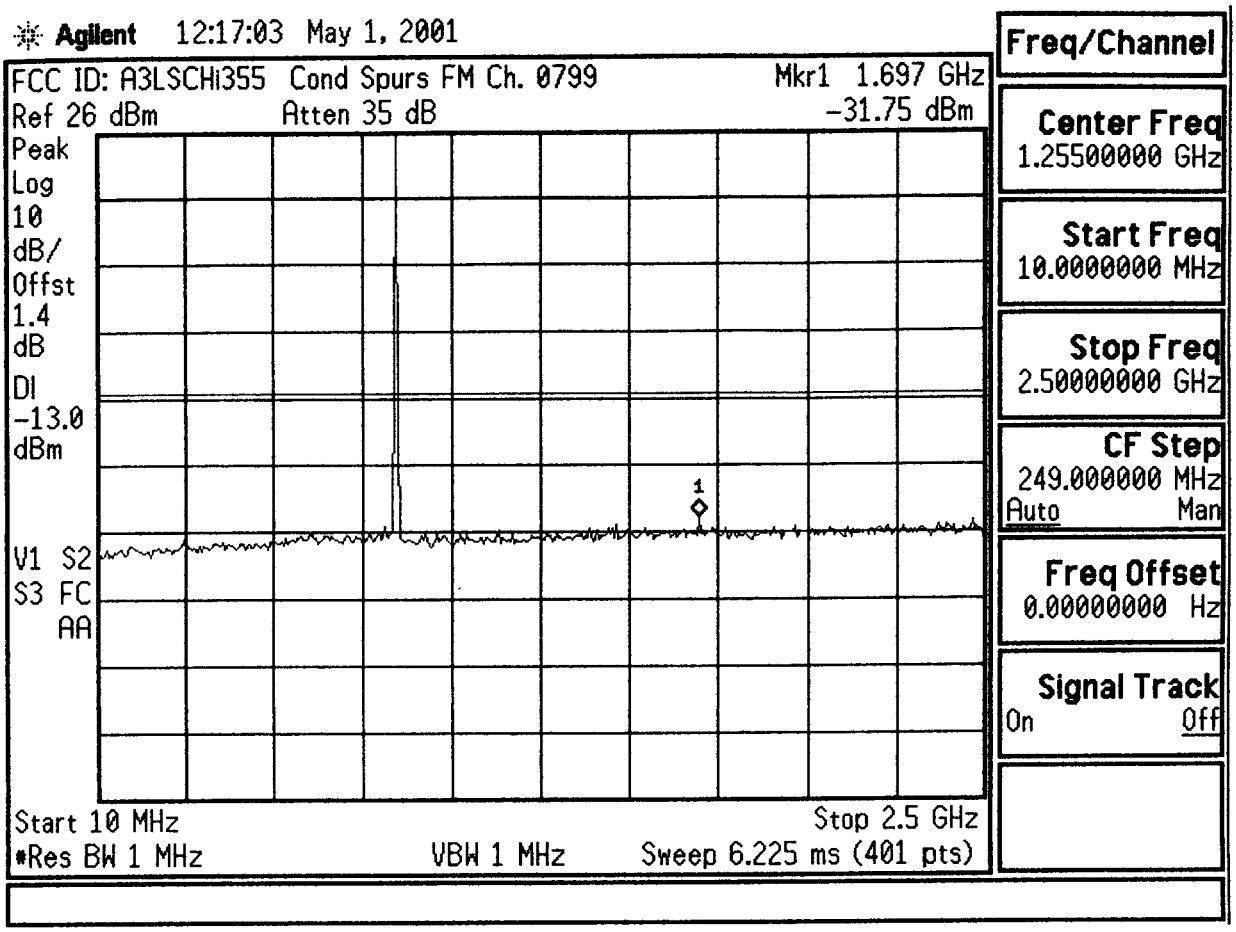
Agilent 12:17:03 May 1, 2001
FCC ID: A3LSCHi355 Cond Spurs FM Ch. 0799
Mkr1 1.697 GHz
Ref 26 dBm
Atten 35 dB
-31.75 dBm
Peak
Log
10
dB/
Offst
1.4
dB
Dl
-13.0
dBm
V1 S2
S3 FC
AA
Start 10 MHz
Stop 2.5 GHz
#Res BW 1 MHz
VBW 1 MHz
Sweep 6.225 ms (401 pts)
Freq/Channel
Center Freq
1.25500000 GHz
Start Freq
10.0000000 MHz
Stop Freq
2.50000000 GHz
CF Step
249.000000 MHz
Auto
Man
Freq Offset
0.00000000 Hz
Signal Track
On
Off

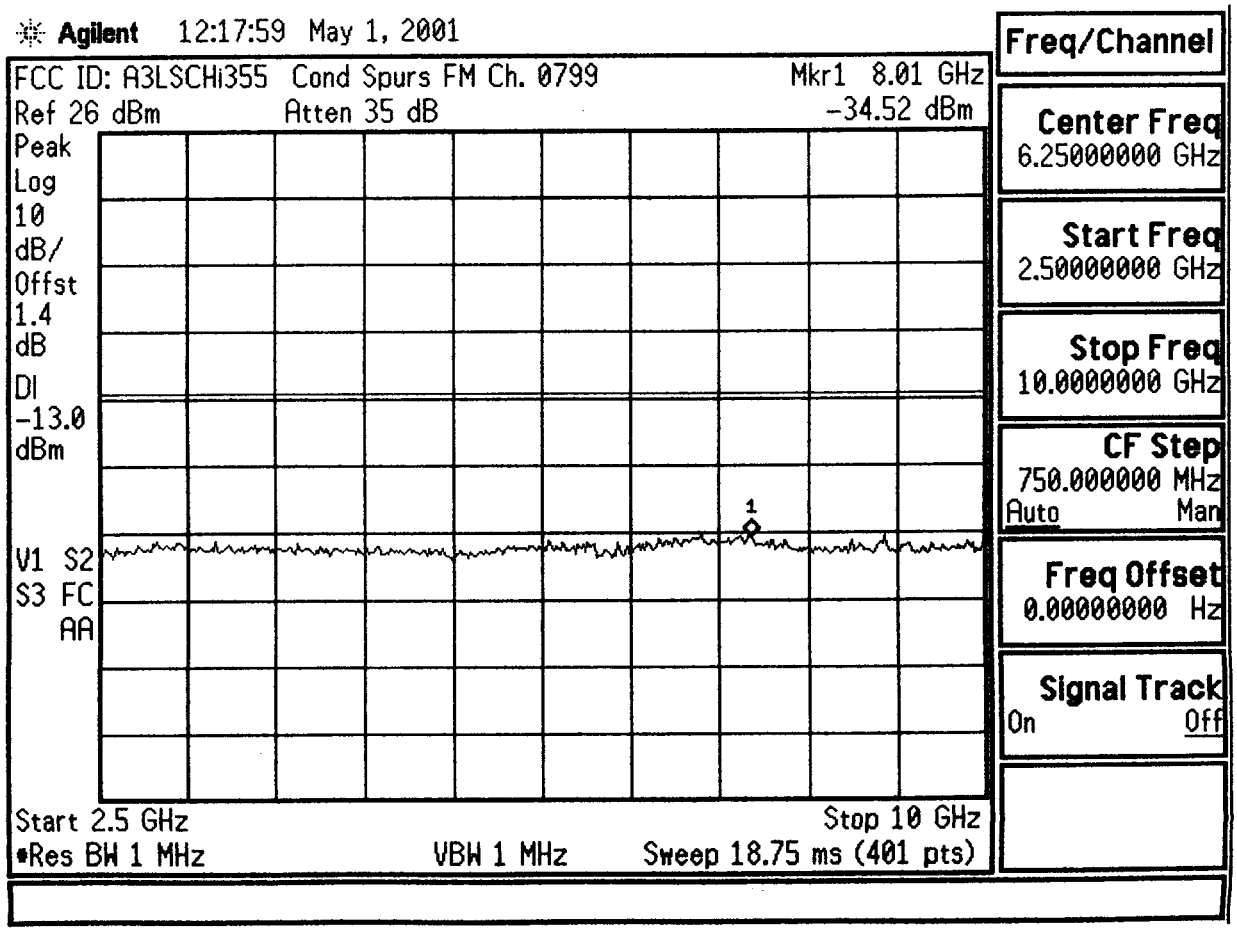
Agilent 12:17:59 May 1, 2001
FCC ID: A3LSCHi355 Cond Spurs FM Ch. 0799
Mkr1 8.01 GHz
Ref 26 dBm
Atten 35 dB
-34.52 dBm
Peak
Log
10
dB/
Offst
1.4
dB
Dl
-13.0
dBm
V1 S2
S3 FC
AA
Start 2.5 GHz
Stop 10 GHz
#Res BW 1 MHz
VBW 1 MHz
Sweep 18.75 ms (401 pts)
Freq/Channel
Center Freq
6.25000000 GHz
Start Freq
2.50000000 GHz
Stop Freq
10.0000000 GHz
CF Step
750.000000 MHz
Auto
Man
Freq Offset
0.00000000 Hz
Signal Track
On
Off

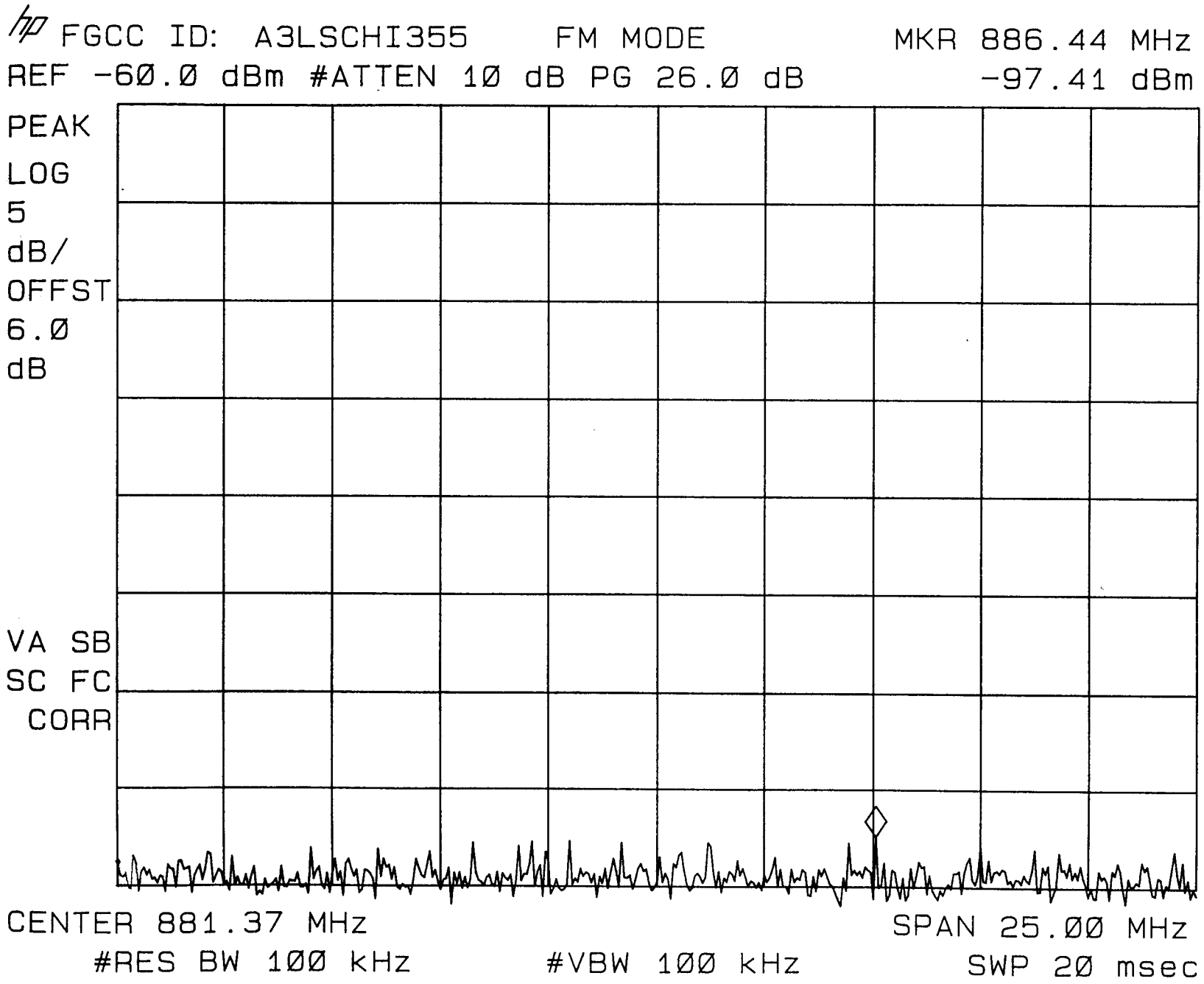
FGCC ID: A3LSCHI355
FM MODE
MKR 886.44 MHz
REF -60.0 dBm #ATTEN 10 dB PG 26.0 dB
-97.41 dBm
PEAK
LOG
5
dB/
OFFST
6.0
dB
VA SB
SC FC
CORR
CENTER 881.37 MHz
SPAN 25.00 MHz
#RES BW 100 kHz
#VBW 100 kHz
SWP 20 msec

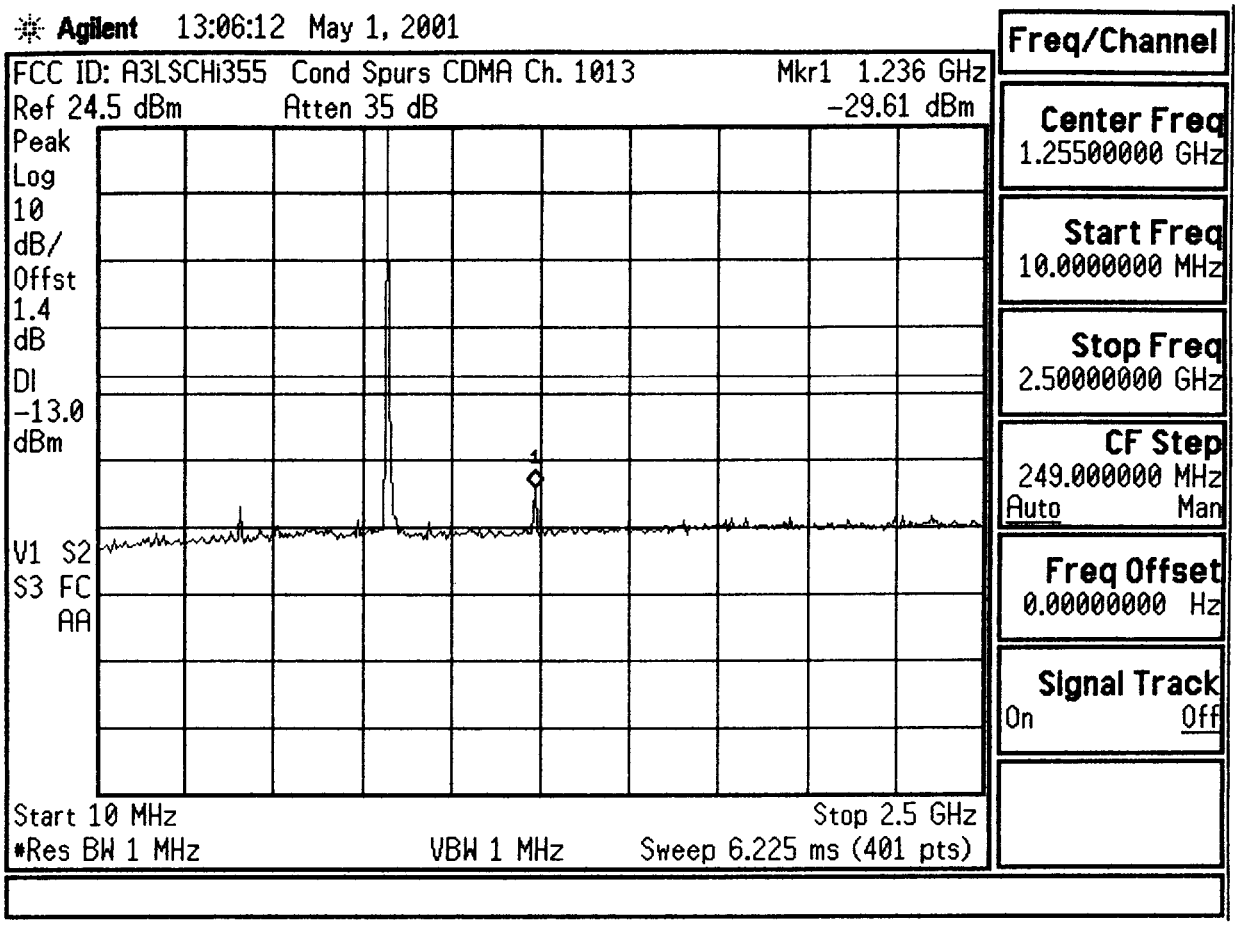
Agilent 13:06:12 May 1, 2001
FCC ID: A3LSCHi355 Cond Spurs CDMA Ch. 1013
Mkr1 1.236 GHz
Ref 24.5 dBm
Atten 35 dB
-29.61 dBm
Peak
Log
10
dB/
Offst
1.4
dB
Dl
-13.0
dBm
V1 S2
S3 FC
AA
Start 10 MHz
Stop 2.5 GHz
#Res BW 1 MHz
VBW 1 MHz
Sweep 6.225 ms (401 pts)
Freq/Channel
Center Freq
1.25500000 GHz
Start Freq
10.0000000 MHz
Stop Freq
2.50000000 GHz
CF Step
249.000000 MHz
Auto
Man
Freq Offset
0.00000000 Hz
Signal Track
On
Off

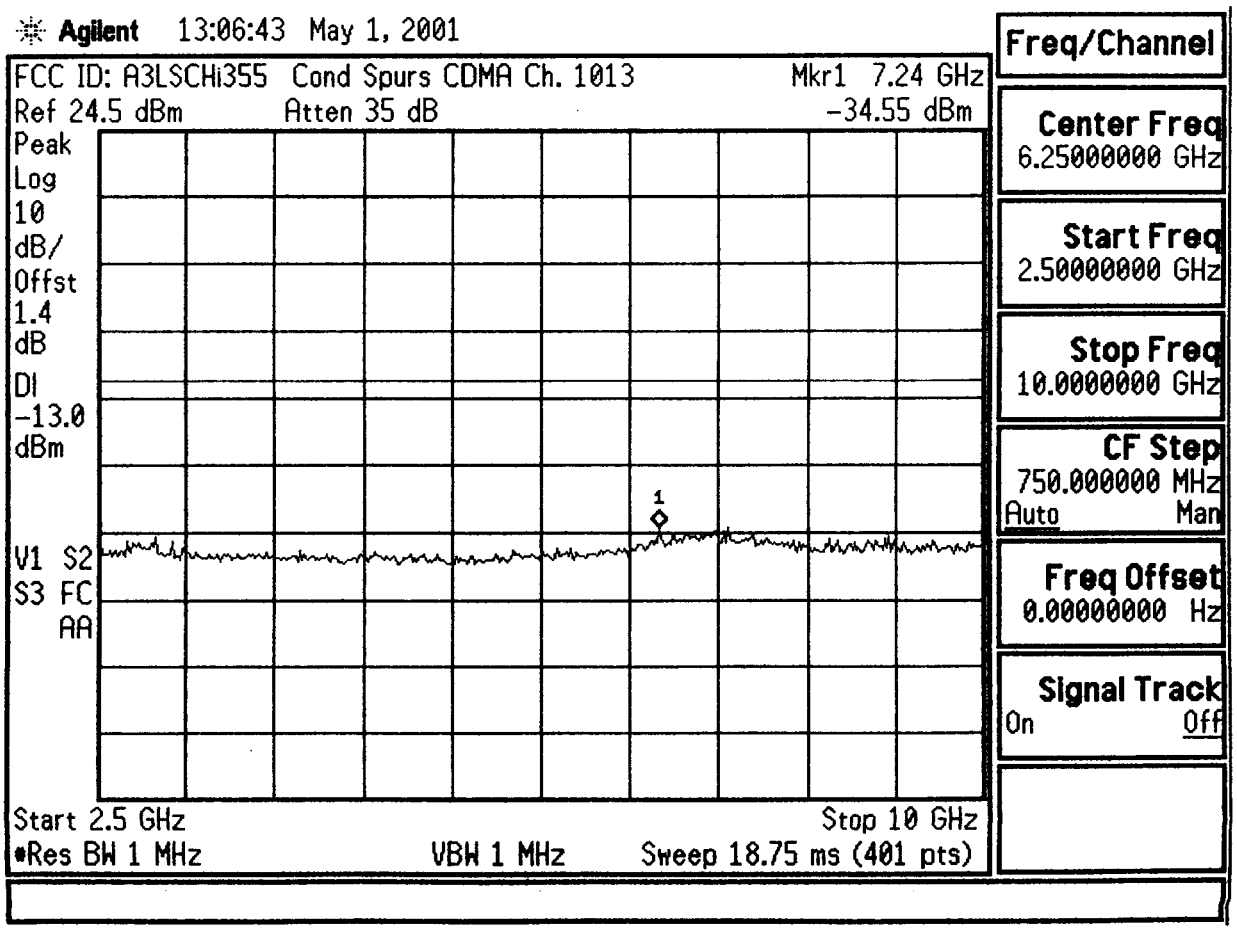
Agilent 13:06:43 May 1, 2001
FCC ID: A3LSCHi355 Cond Spurs CDMA Ch. 1013
Mkr1 7.24 GHz
Ref 24.5 dBm
Atten 35 dB
-34.55 dBm
Peak
Log
10
dB/
Offst
1.4
dB
Dl
-13.0
dBm
V1 S2
S3 FC
AA
Start 2.5 GHz
Stop 10 GHz
#Res BW 1 MHz
VBW 1 MHz
Sweep 18.75 ms (401 pts)
Freq/Channel
Center Freq
6.25000000 GHz
Start Freq
2.50000000 GHz
Stop Freq
10.0000000 GHz
CF Step
750.000000 MHz
Auto
Man
Freq Offset
0.00000000 Hz
Signal Track
On
Off

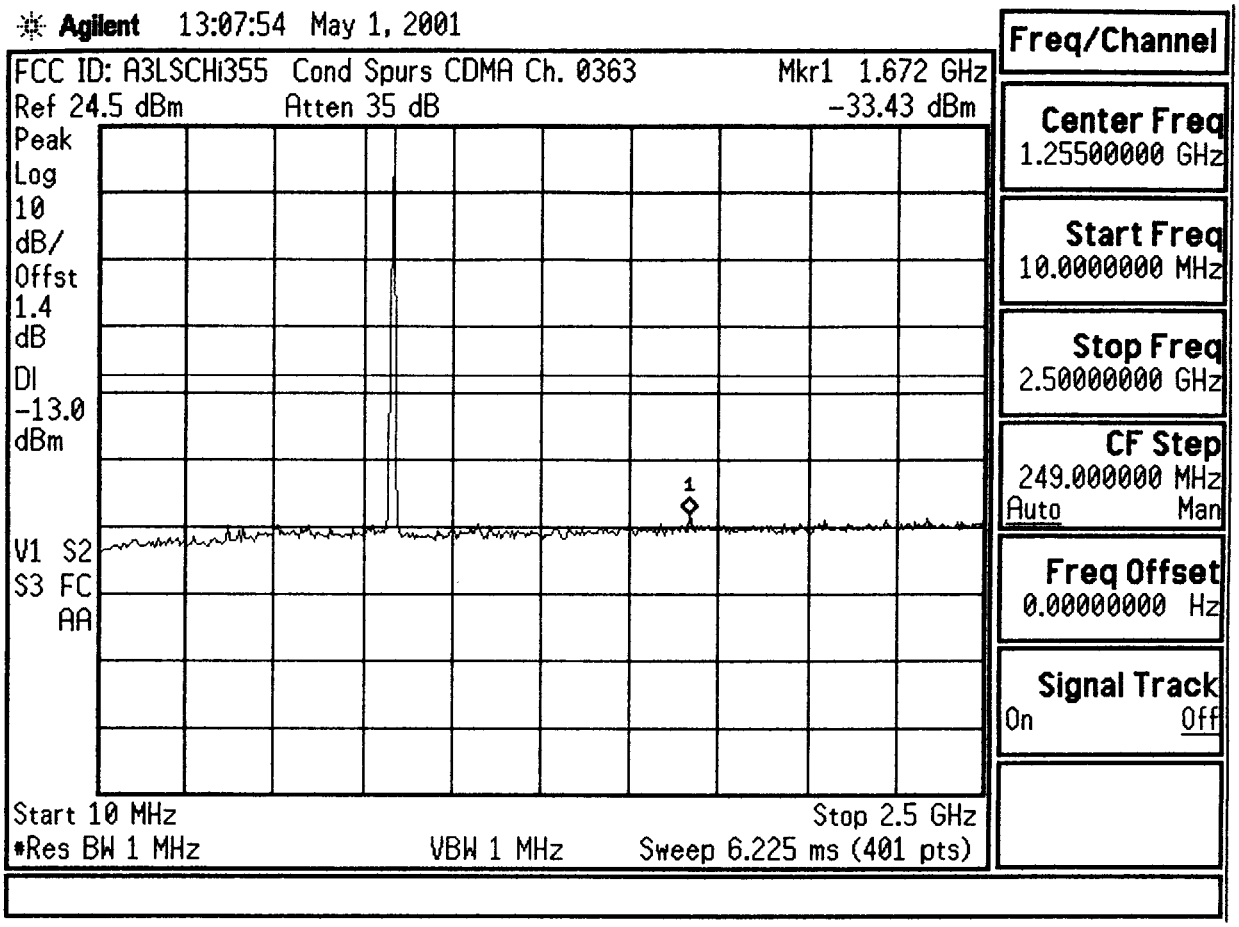
Agilent 13:07:54 May 1, 2001
FCC ID: A3LSCHi355 Cond Spurs CDMA Ch. 0363
Mkr1 1.672 GHz
Ref 24.5 dBm
Atten 35 dB
-33.43 dBm
Peak
Log
10
dB/
Offst
1.4
dB
Dl
-13.0
dBm
1
V1 S2
S3 FC
AA
Start 10 MHz
Stop 2.5 GHz
#Res BW 1 MHz
VBW 1 MHz
Sweep 6.225 ms (401 pts)
Freq/Channel
Center Freq
1.25500000 GHz
Start Freq
10.0000000 MHz
Stop Freq
2.50000000 GHz
CF Step
249.000000 MHz
Auto
Man
Freq Offset
0.00000000 Hz
Signal Track
On
Off

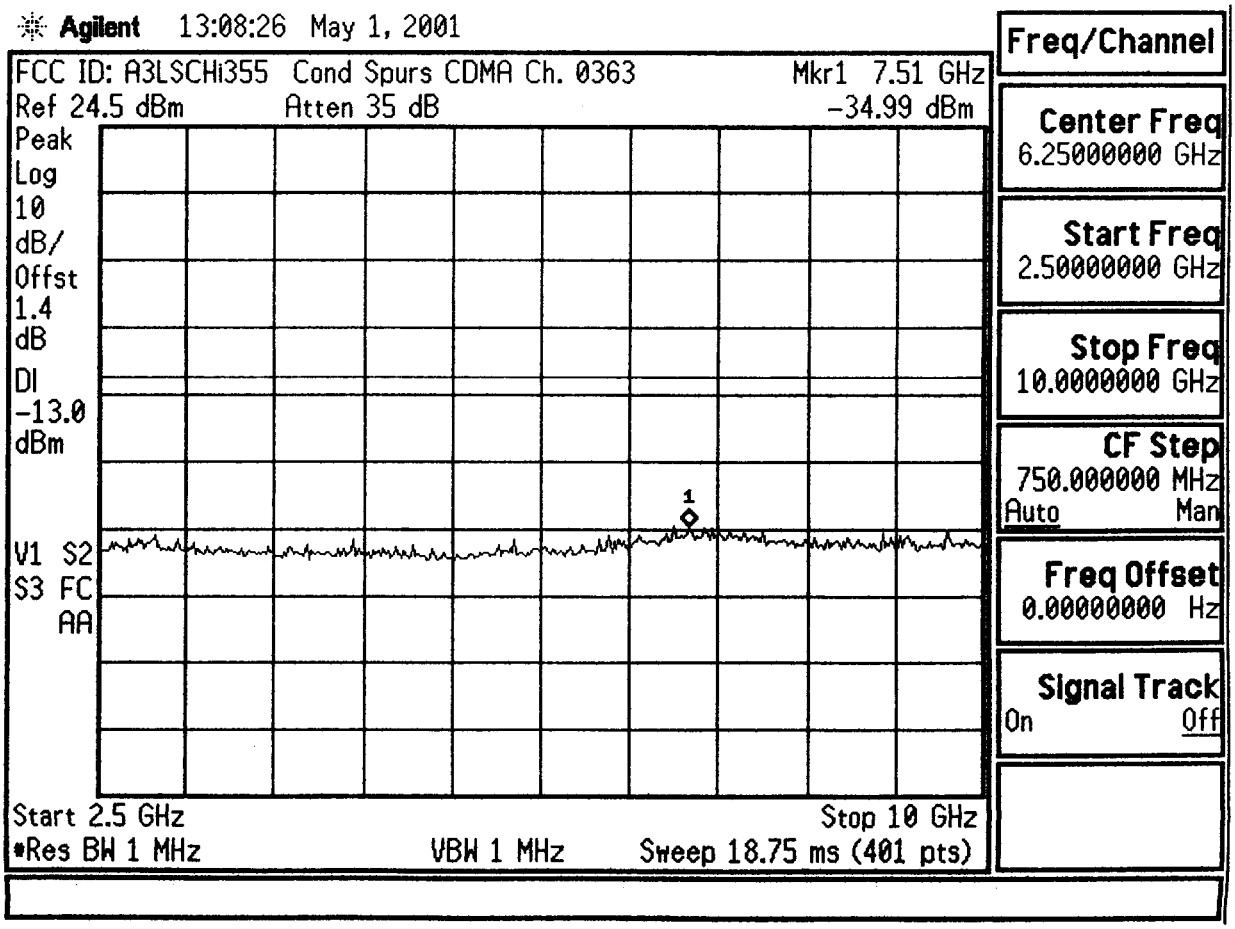
Agilent 13:08:26 May 1, 2001
FCC ID: A3LSCHi355 Cond Spurs CDMA Ch. 0363
Mkr1 7.51 GHz
Ref 24.5 dBm
Atten 35 dB
-34.99 dBm
Peak
Log
10
dB/
Offst
1.4
dB
Dl
-13.0
dBm
1
V1 S2
S3 FC
AA
Start 2.5 GHz
Stop 10 GHz
#Res BW 1 MHz
VBW 1 MHz
Sweep 18.75 ms (401 pts)
Freq/Channel
Center Freq
6.25000000 GHz
Start Freq
2.50000000 GHz
Stop Freq
10.0000000 GHz
CF Step
750.000000 MHz
Auto
Man
Freq Offset
0.00000000 Hz
Signal Track
On
Off

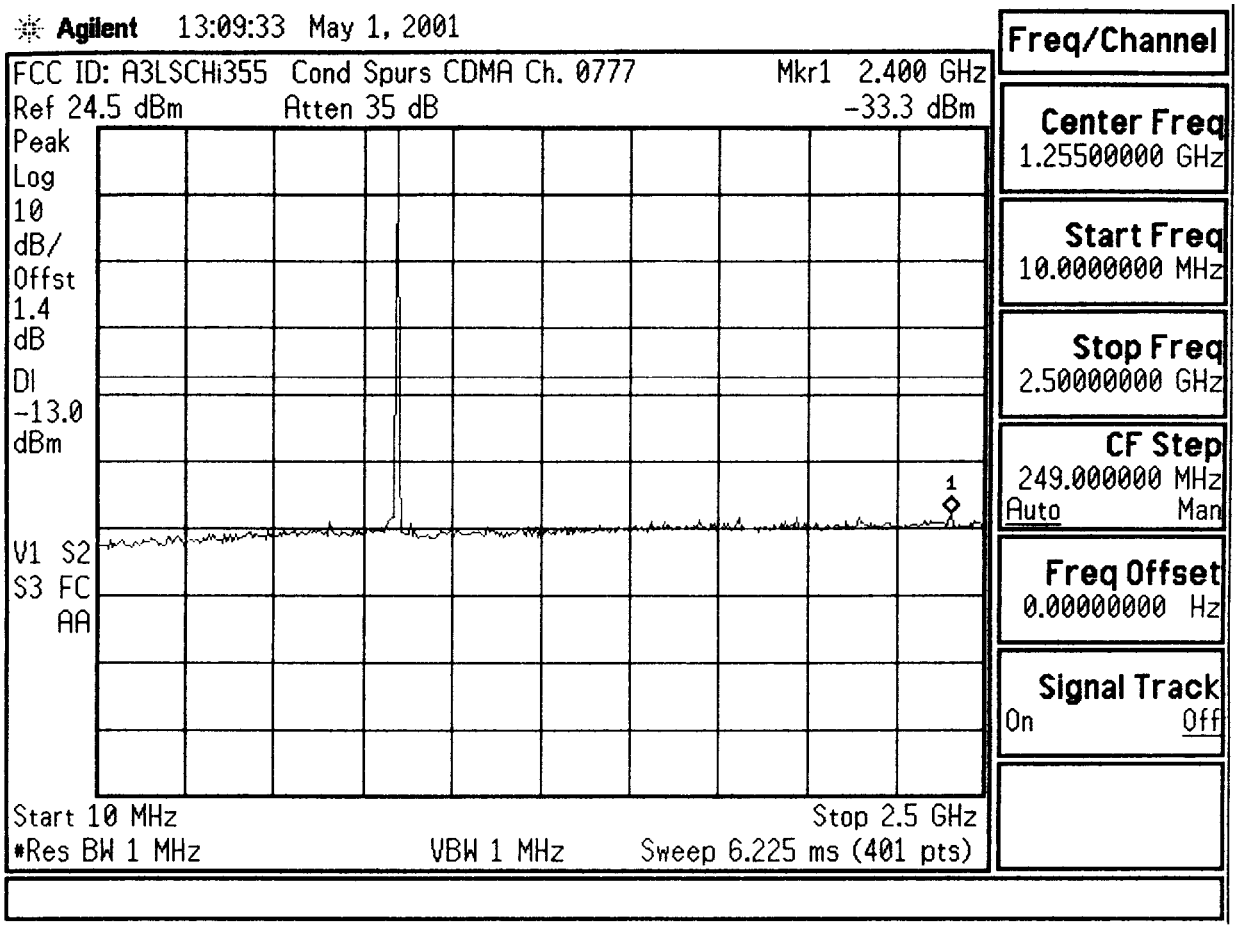
Agilent 13:09:33 May 1, 2001
FCC ID: A3LSCHi355 Cond Spurs CDMA Ch. 0777
Mkr1 2.400 GHz
Ref 24.5 dBm
Atten 35 dB
-33.3 dBm
Peak
Log
10
dB/
Offst
1.4
dB
Dl
-13.0
dBm
V1 S2
S3 FC
AA
Start 10 MHz
Stop 2.5 GHz
#Res BW 1 MHz
VBW 1 MHz
Sweep 6.225 ms (401 pts)
Freq/Channel
Center Freq
1.25500000 GHz
Start Freq
10.0000000 MHz
Stop Freq
2.50000000 GHz
CF Step
249.000000 MHz
Auto
Man
Freq Offset
0.00000000 Hz
Signal Track
On
Off

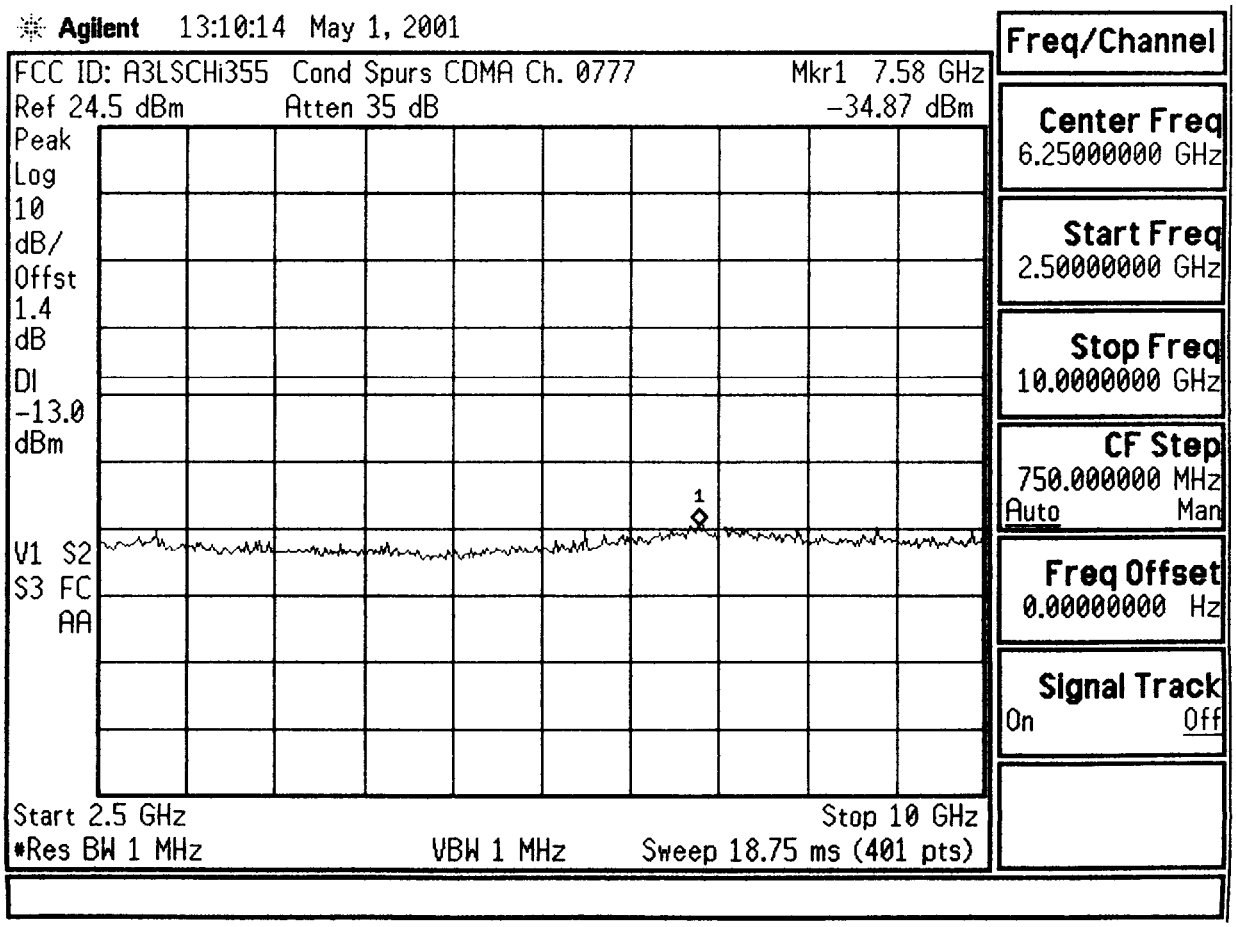
Agilent 13:10:14 May 1, 2001
FCC ID: A3LSCHi355 Cond Spurs CDMA Ch. 0777
Mkr1 7.58 GHz
Ref 24.5 dBm
Atten 35 dB
-34.87 dBm
Peak
Log
10
dB/
Offst
1.4
dB
Dl
-13.0
dBm
V1 S2
S3 FC
AA
Start 2.5 GHz
Stop 10 GHz
#Res BW 1 MHz
VBW 1 MHz
Sweep 18.75 ms (401 pts)
Freq/Channel
Center Freq
6.25000000 GHz
Start Freq
2.50000000 GHz
Stop Freq
10.0000000 GHz
CF Step
750.000000 MHz
Auto
Man
Freq Offset
0.00000000 Hz
Signal Track
On
Off

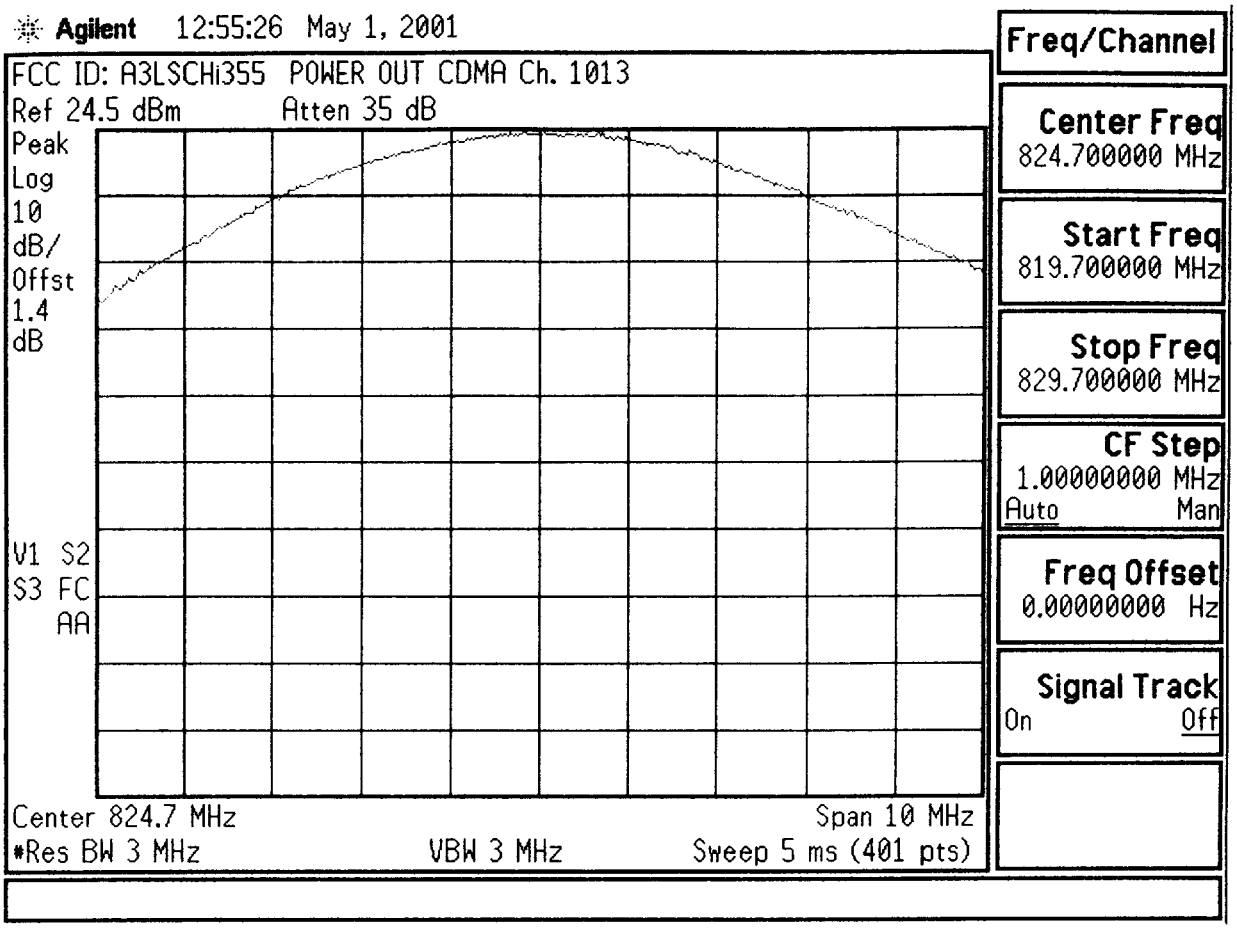
Agilent 12:55:26 May 1, 2001
FCC ID: A3LSCHi355 POWER OUT CDMA Ch. 1013
Ref 24.5 dBm Atten 35 dB
Peak
Log
10
dB/
Offst
1.4
dB
V1 S2
S3 FC
AA
Center 824.7 MHz
Span 10 MHz
#Res BW 3 MHz
VBW 3 MHz
Sweep 5 ms (401 pts)
Freq/Channel
Center Freq
824.700000 MHz
Start Freq
819.700000 MHz
Stop Freq
829.700000 MHz
CF Step
1.00000000 MHz
Auto Man
Freq Offset
0.00000000 Hz
Signal Track
On Off

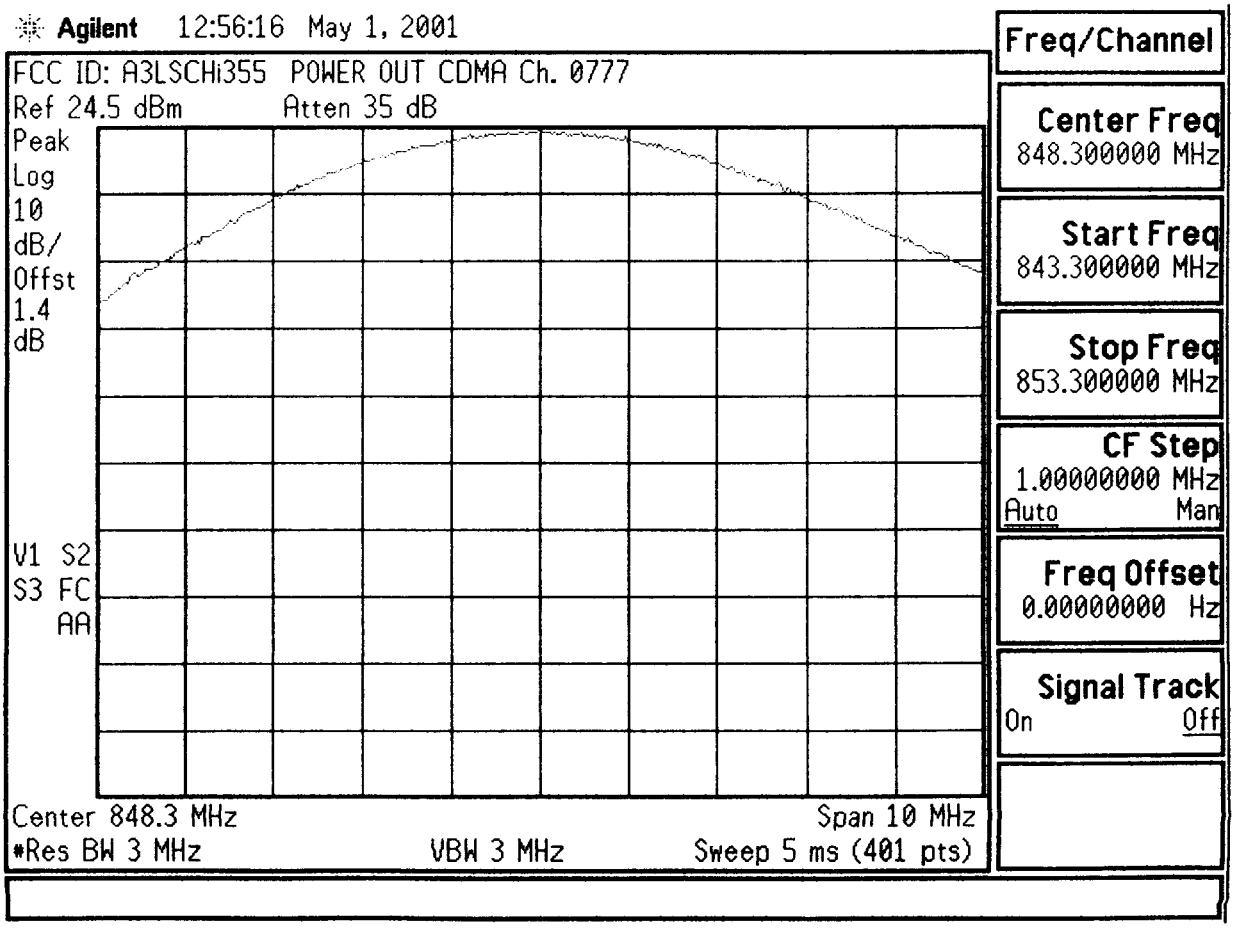
Agilent 12:56:16 May 1, 2001
FCC ID: A3LSCHi355 POWER OUT CDMA Ch. 0777
Ref 24.5 dBm Atten 35 dB
Peak
Log
10
dB/
Offst
1.4
dB
V1 S2
S3 FC
AA
Center 848.3 MHz
Span 10 MHz
#Res BW 3 MHz
VBW 3 MHz
Sweep 5 ms (401 pts)
Freq/Channel
Center Freq
848.300000 MHz
Start Freq
843.300000 MHz
Stop Freq
853.300000 MHz
CF Step
1.00000000 MHz
Auto Man
Freq Offset
0.00000000 Hz
Signal Track
On Off

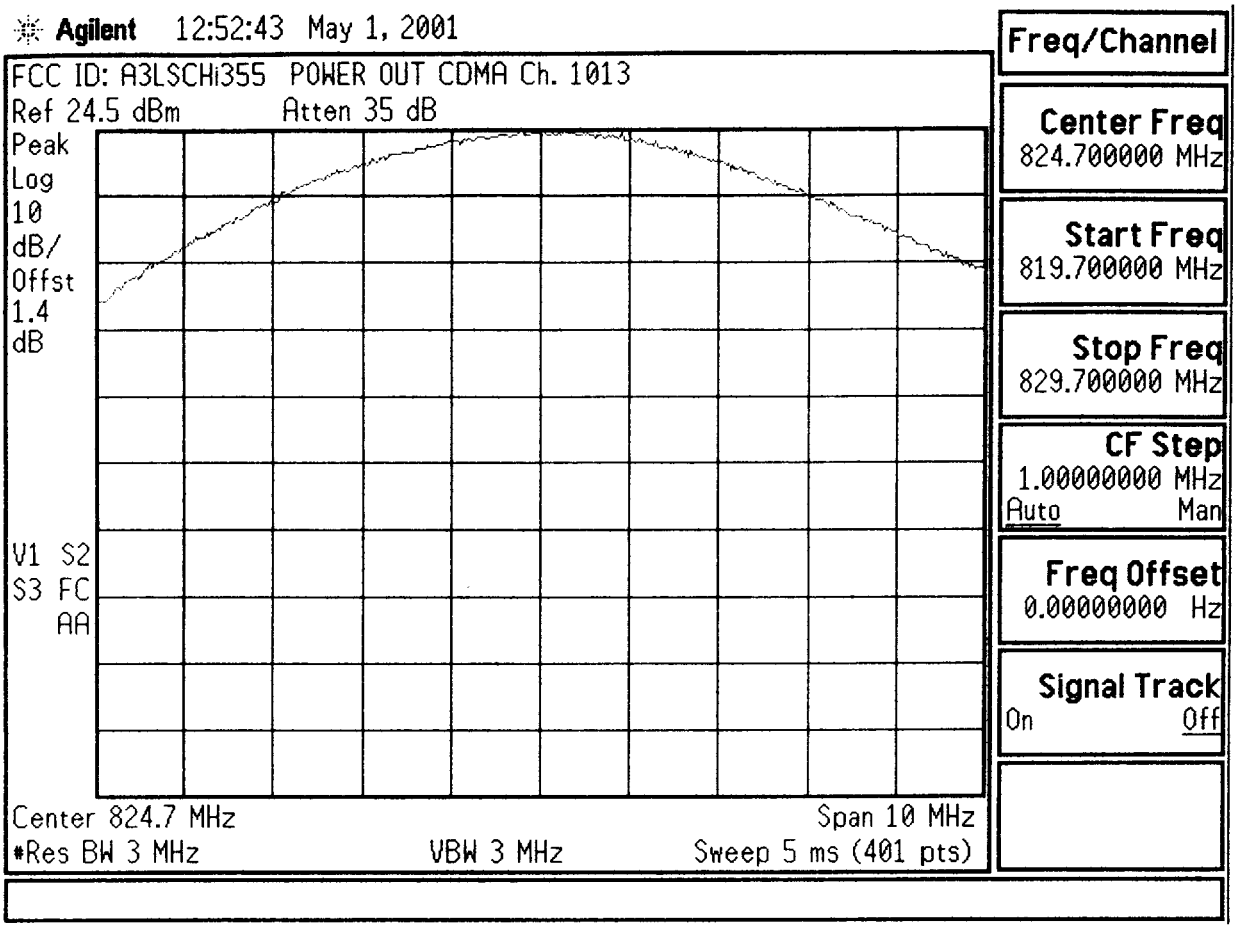
Agilent 12:52:43 May 1, 2001
FCC ID: A3LSCHi355 POWER OUT CDMA Ch. 1013
Ref 24.5 dBm Atten 35 dB
Peak
Log
10
dB/
Offst
1.4
dB
V1 S2
S3 FC
AA
Center 824.7 MHz
Span 10 MHz
#Res BW 3 MHz
VBW 3 MHz
Sweep 5 ms (401 pts)
Freq/Channel
Center Freq
824.700000 MHz
Start Freq
819.700000 MHz
Stop Freq
829.700000 MHz
CF Step
1.00000000 MHz
Auto Man
Freq Offset
0.00000000 Hz
Signal Track
On Off

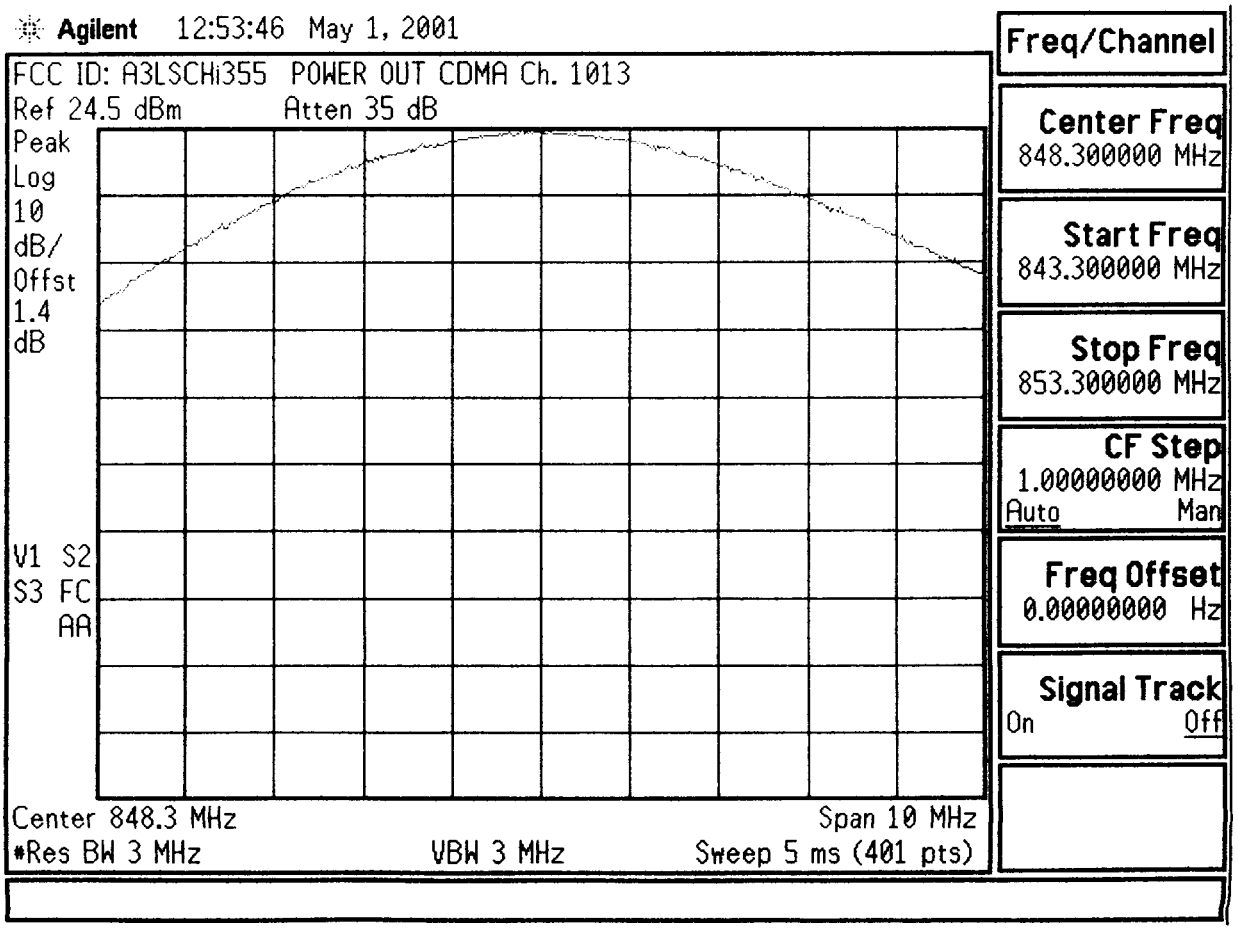
Agilent 12:53:46 May 1, 2001
FCC ID: A3LSCHi355 POWER OUT CDMA Ch. 1013
Ref 24.5 dBm Atten 35 dB
Peak
Log
10
dB/
Offst
1.4
dB
V1 S2
S3 FC
AA
Center 848.3 MHz
Span 10 MHz
#Res BW 3 MHz
VBW 3 MHz
Sweep 5 ms (401 pts)
Freq/Channel
Center Freq
848.300000 MHz
Start Freq
843.300000 MHz
Stop Freq
853.300000 MHz
CF Step
1.00000000 MHz
Auto Man
Freq Offset
0.00000000 Hz
Signal Track
On Off

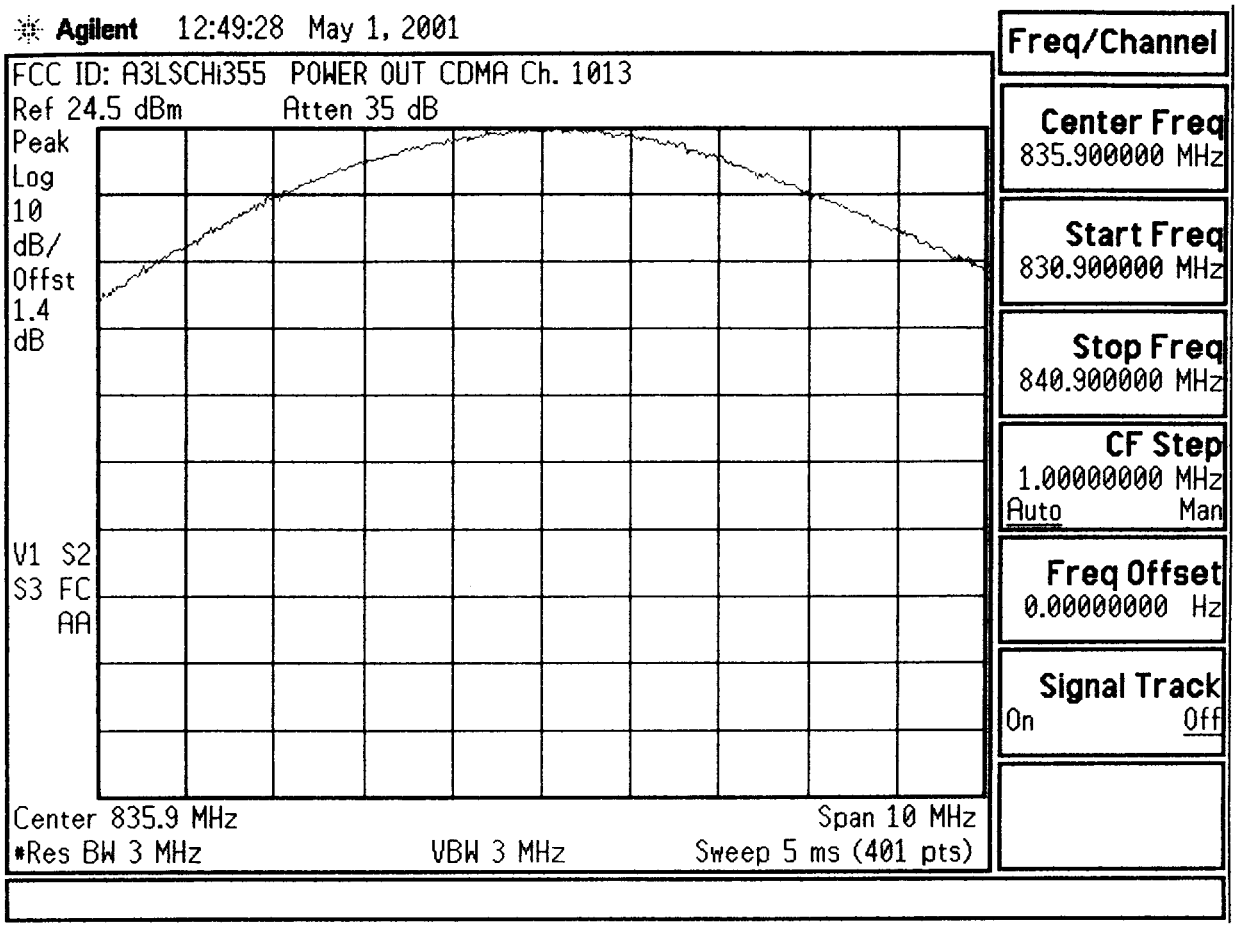
Agilent 12:49:28 May 1, 2001
FCC ID: A3LSCHi355 POWER OUT CDMA Ch. 1013
Ref 24.5 dBm Atten 35 dB
Peak
Log
10
dB/
Offst
1.4
dB
V1 S2
S3 FC
AA
Center 835.9 MHz
Span 10 MHz
#Res BW 3 MHz
VBW 3 MHz
Sweep 5 ms (401 pts)
Freq/Channel
Center Freq
835.900000 MHz
Start Freq
830.900000 MHz
Stop Freq
840.900000 MHz
CF Step
1.00000000 MHz
Auto Man
Freq Offset
0.00000000 Hz
Signal Track
On Off

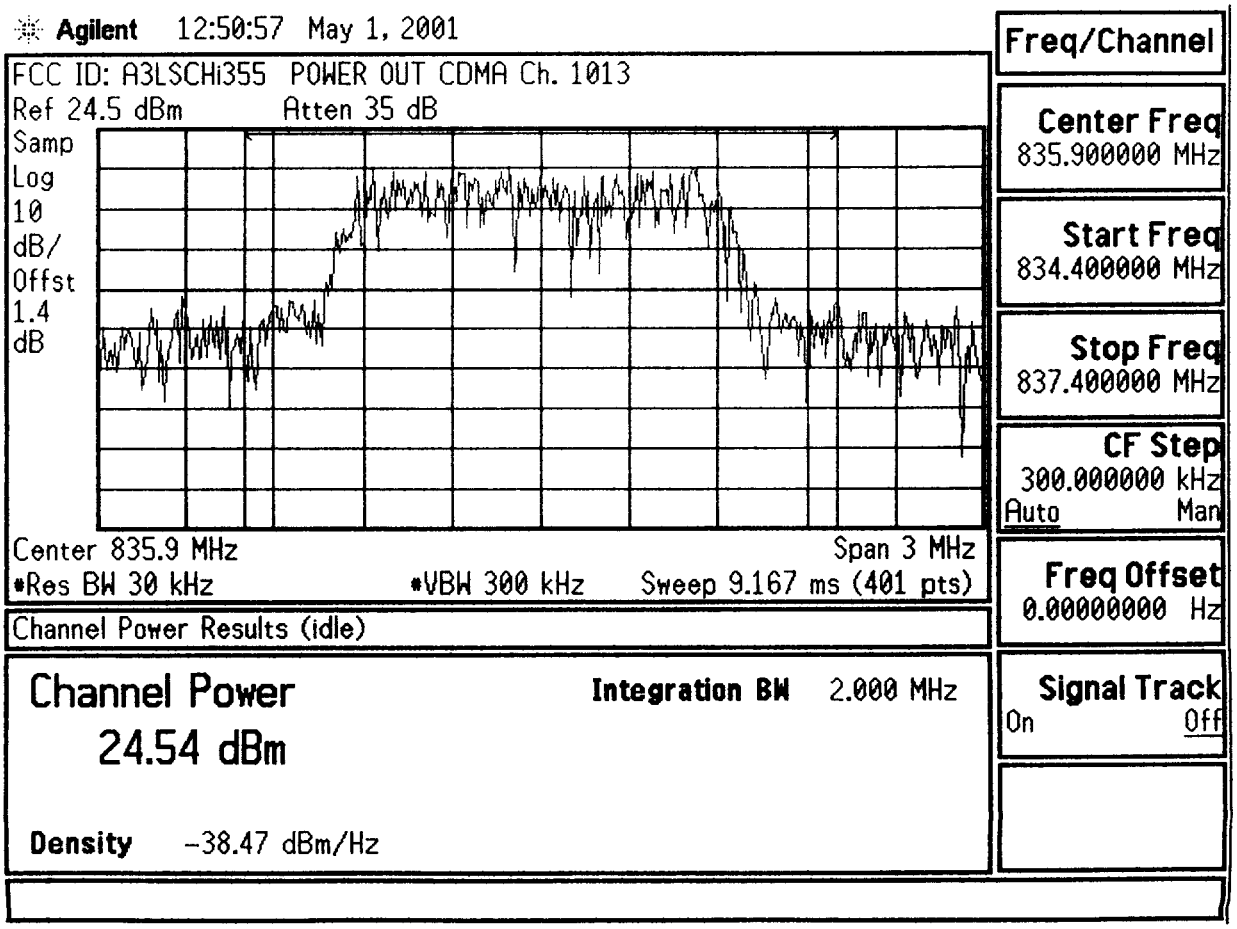
Agilent 12:50:57 May 1, 2001
FCC ID: A3LSCHi355 POWER OUT CDMA Ch. 1013
Ref 24.5 dBm Atten 35 dB
Samp
Log
10
dB/
Offst
1.4
dB
Center 835.9 MHz
Span 3 MHz
#Res BW 30 kHz
#VBW 300 kHz
Sweep 9.167 ms (401 pts)
Channel Power Results (idle)
Channel Power
24.54 dBm
Integration BW 2.000 MHz
Density -38.47 dBm/Hz
Freq/Channel
Center Freq
835.900000 MHz
Start Freq
834.400000 MHz
Stop Freq
837.400000 MHz
CF Step
300.000000 kHz
Auto Man
Freq Offset
0.00000000 Hz
Signal Track
On Off

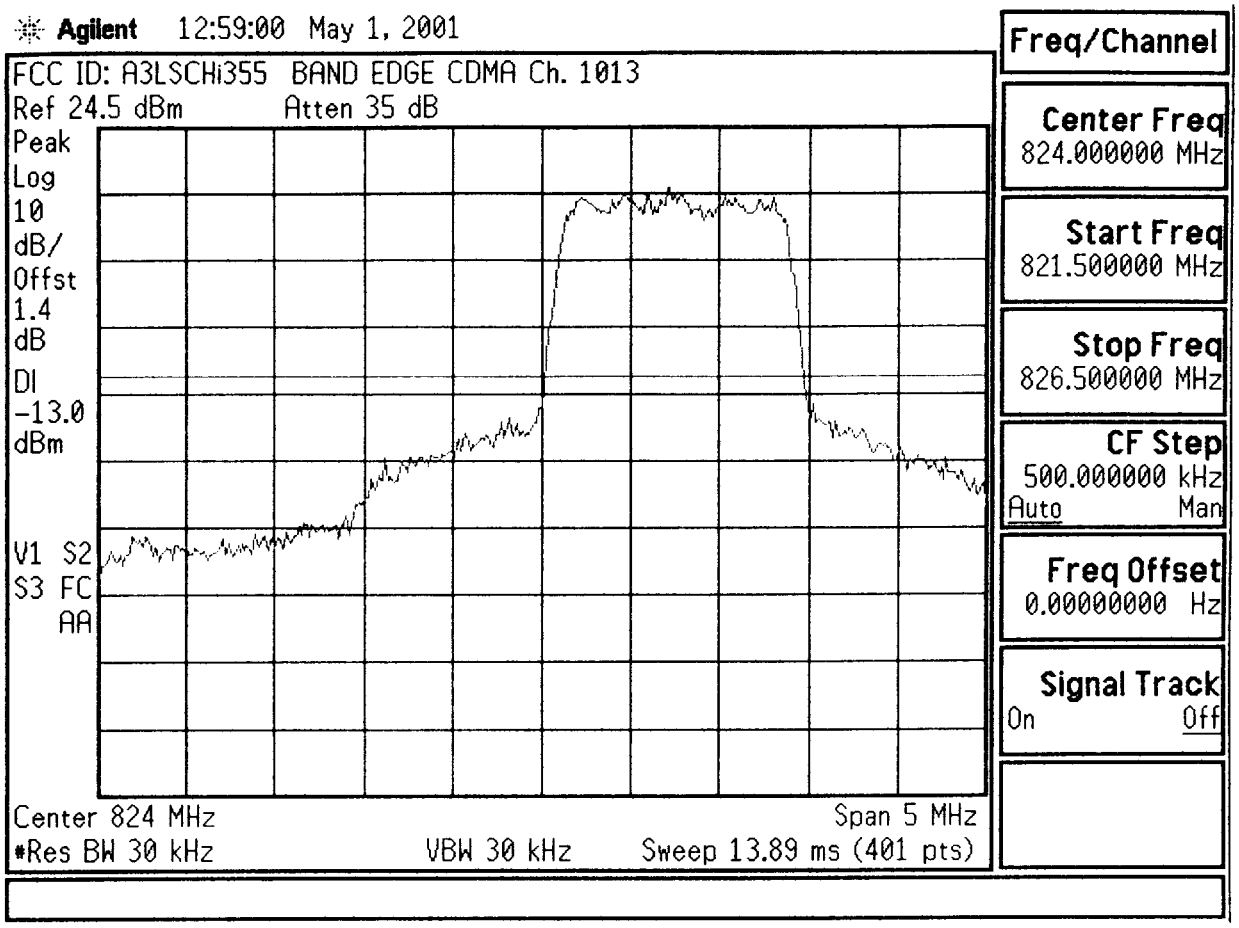
Agilent 12:59:00 May 1, 2001
FCC ID: A3LSCHi355 BAND EDGE CDMA Ch. 1013
Ref 24.5 dBm Atten 35 dB
Peak
Log
10
dB/
Offst
1.4
dB
Dl
-13.0
dBm
V1 S2
S3 FC
AA
Center 824 MHz
Span 5 MHz
#Res BW 30 kHz
VBW 30 kHz
Sweep 13.89 ms (401 pts)
Freq/Channel
Center Freq
824.000000 MHz
Start Freq
821.500000 MHz
Stop Freq
826.500000 MHz
CF Step
500.000000 kHz
Auto Man
Freq Offset
0.00000000 Hz
Signal Track
On Off

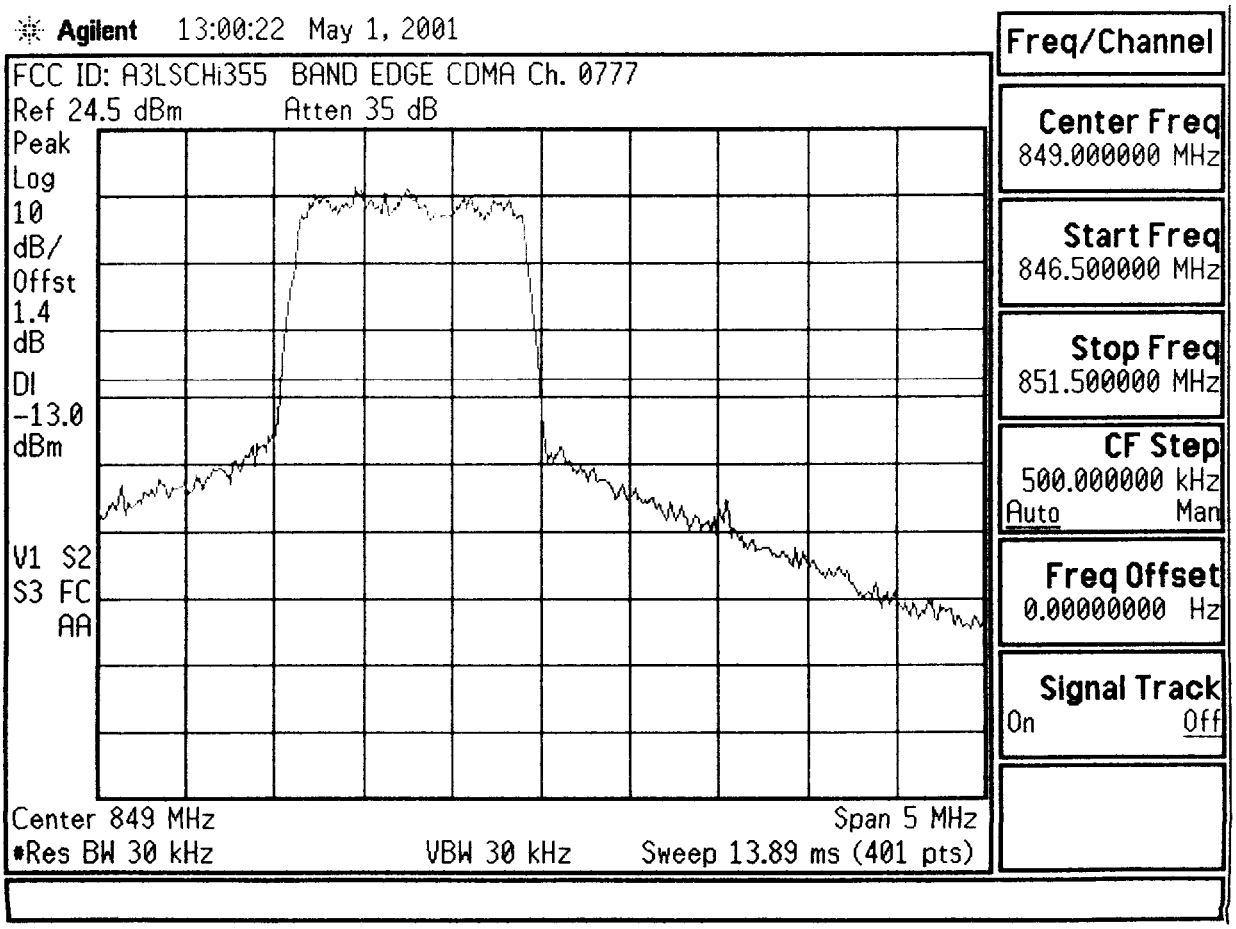
Agilent 13:00:22 May 1, 2001
FCC ID: A3LSCHi355 BAND EDGE CDMA Ch. 0777
Ref 24.5 dBm Atten 35 dB
Peak
Log
10
dB/
Offst
1.4
dB
Dl
-13.0
dBm
V1 S2
S3 FC
AA
Center 849 MHz
Span 5 MHz
#Res BW 30 kHz
VBW 30 kHz
Sweep 13.89 ms (401 pts)
Freq/Channel
Center Freq
849.000000 MHz
Start Freq
846.500000 MHz
Stop Freq
851.500000 MHz
CF Step
500.000000 kHz
Auto Man
Freq Offset
0.00000000 Hz
Signal Track
On Off

SUBJECT: Modulation Characteristics
FCC Part 22

Test Report No.: 24/22.210411217.A3L
Test Date: 05.02.2001

EUT: SAMSUNG Dual-Mode Cellular Phone (AMPS/CDMA)
Model: *SCH-I355*
FCC ID: **A3LSCHI355**

REFERENCE: 1 kHz = 0 dB

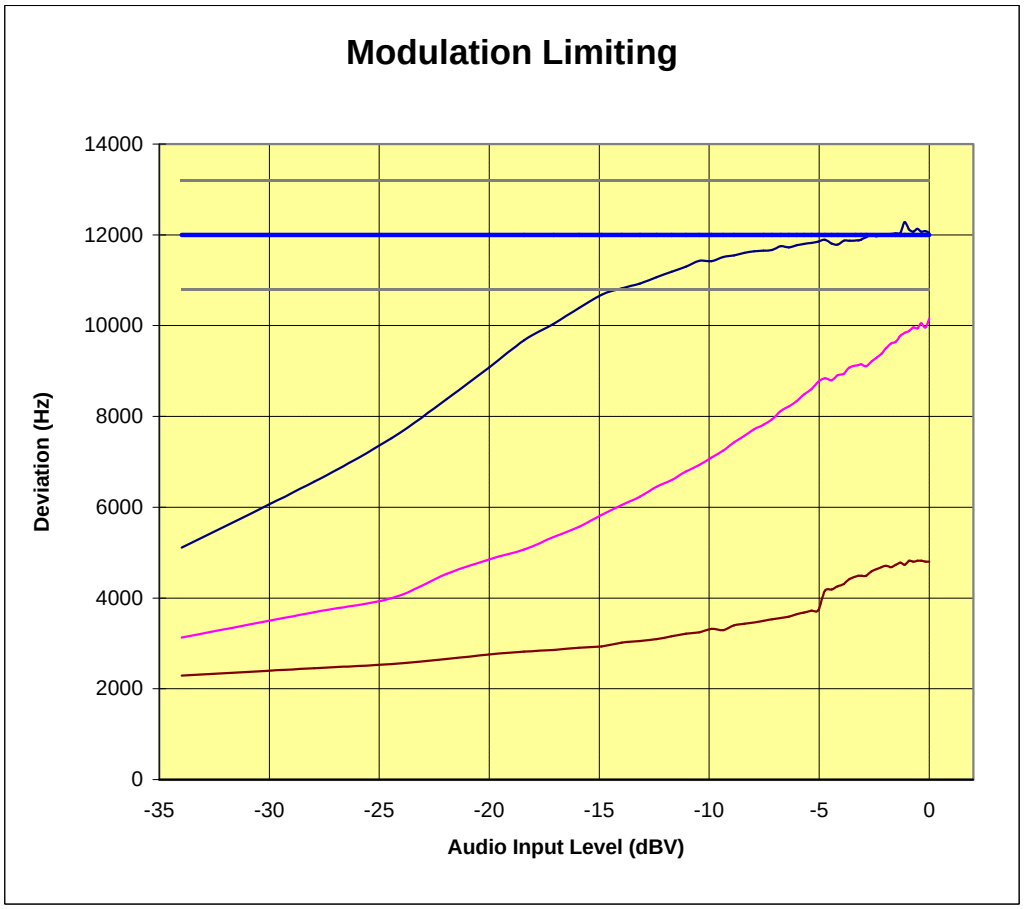

SUBJECT: Modulation Characteristics
FCC Part 24/22

Test Report No.: 24/22.210411217.A3L
Test Date: 05.02.2001

EUT: SAMSUNG Dual-Mode Cellular Phone (AMPS/CDMA)
Model: *SCH-I355*
FCC ID: **A3LSCHI355**

REFERENCE: 1 kHz = 0 dB

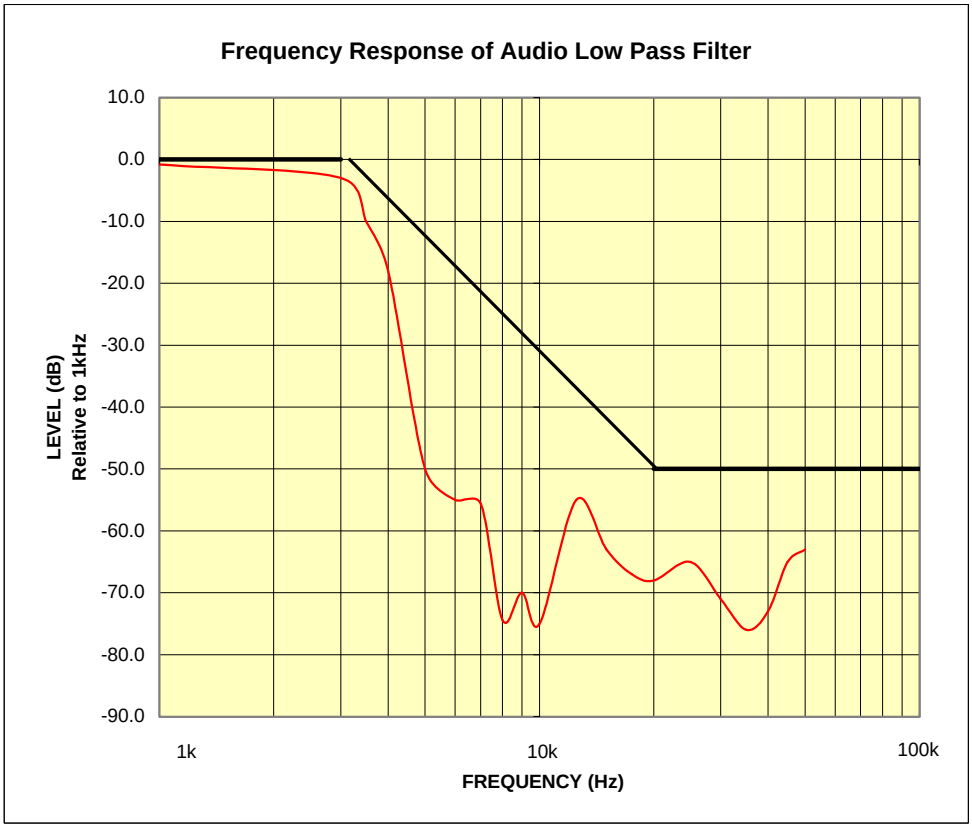

SUBJECT: Modulation Characteristics
FCC Part 24/22

Test Report No.: 24/22.210411217.A3L
Test Date: 05.02.2001

EUT: SAMSUNG Dual-Mode Cellular Phone (AMPS/CDMA)
Model: *SCH-I355*
FCC ID: **A3LSCHI355**
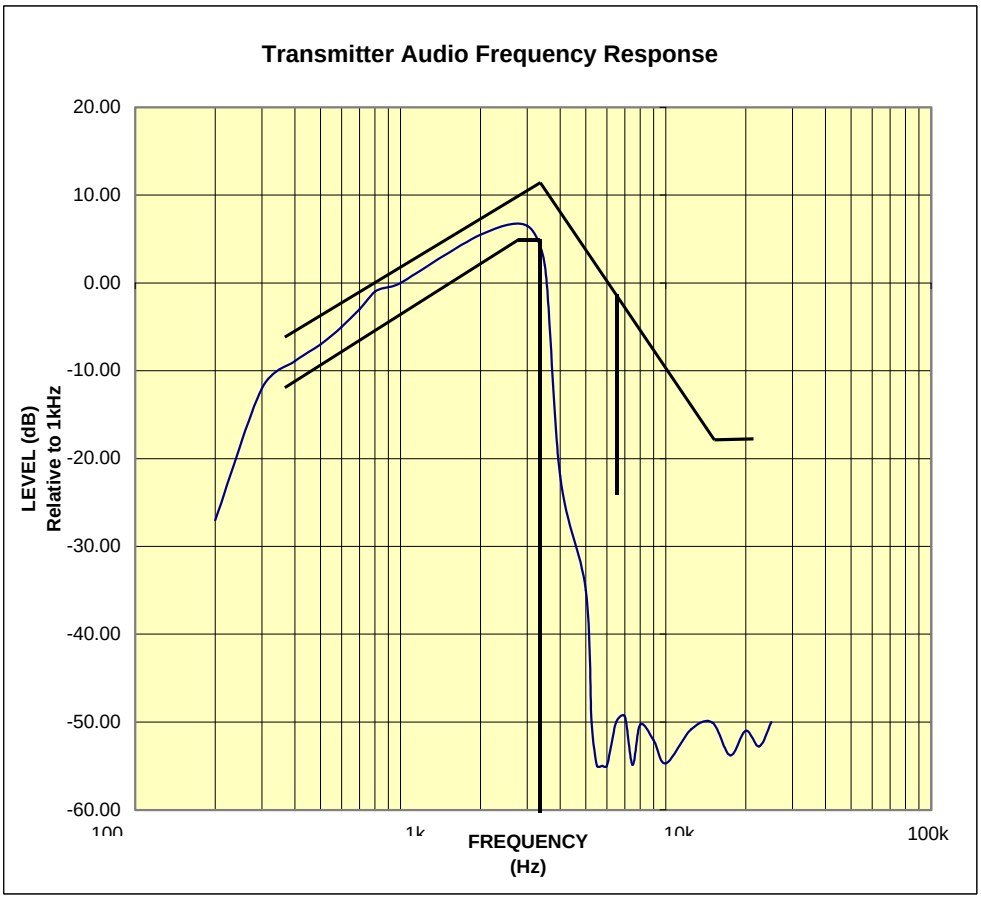
REFERENCE: 1 kHz = 0 dB