SAMSUNG

User's Guide

Digital Laser MFP

SCX-4216F
SCX-4116
SCX-4016

For UK customers:

To reorder your consumables
Call 0800 3164060

For Technical Assistance
Call 0870 2420303

About the User's Guides

Your machine comes with the three user's guides:

This Laser MFP User's Guide provides information you need for setting up your machine and installing the supplied software. It also provides all of the detailed instructions for using your machine as a printer, a scanner and a copier and information for maintaining and troubleshooting the machine.

The Laser Facsimile User's Guide (only for SCX-4216F) provides information for using your machine as a fax machine. You can find how to send and receive a fax, and how to set fax-related options.

The SmarThru 3 User's Guide provides the basic description about using the multi-function application. Samsung SmarThru allows you to scan and edit images, and to scan for copying, faxing and sending an e-mail on your computer. You can also find a brief description on the automatic text recognition program, AnyPage.

This manual is provided for information purposes only. All information included herein is subject to change without notice. Samsung Electronics is not responsible for any changes, direct or indirect, arising from or related to use of this manual.

© 2002 Samsung Electronics Co., Ltd. All rights reserved.

- SCX-4016, SCX-4116, SCX-4216F and Samsung logo are trademarks of Samsung Electronics Co., Ltd.
- Centronics is a trademark of Centronics Data Computer Corporation.
- IBM and IBM PC are trademarks of International Business Machines Corporation.
- Apple, AppleTalk, TrueType, LaserWriter and Macintosh are trademarks of Apple Computer, Inc.
- Microsoft, Windows, Windows 9x, Window Me, Windows 2000, Windows NT 4.0 and Windows XP are registered trademarks of Microsoft Corporation.
- All other brand or product names are trademarks of their respective companies or organizations.

CONTENTS

Chapter 1: GETTING STARTED

Unpacking 1.2
Selecting a Location 1.4
Understanding the Component Location 1.5
Front View 1.5
Rear View 1.6
Control Panel Functions 1.7
Installing the Toner Cartridge 1.10
Loading Paper 1.12
Making Connections 1.15
Turning the Machine On 1.17
Changing the Display Language 1.17
Setting the Paper Type and Size 1.18
Using the Save Modes 1.19
Toner Save Mode 1.19
Power Save Mode 1.19
CCD Power Save Mode 1.20

Chapter 2: INSTALLING SOFTWARE

About Samsung Software 2.2
System Requirements 2.3
Installing Samsung Software in Windows 2.4
Installing the USB Driver in Windows 98/Me 2.8
Uninstalling Samsung Software 2.9
Uninstalling the MFP Driver 2.9
Uninstalling Samsung SmarThru 2.10
Using the CD-ROM 2.12

Chapter 3: PAPER HANDLING

Selecting Print Materials 3.2
Size, Input Sources and Capacities 3.2
Guidelines for Paper and Special Materials 3.3
Selecting an Output Location 3.4
Printing to the Front Output Tray (Face down) 3.5
Printing to the Rear Output Slot (Face up) 3.5
Loading Paper in the Paper Tray 3.6
Using the Bypass Tray 3.8
Setting the Paper Type and Size for the Bypass Tray . 3.10

Chapter 4: COPYING

Loading Paper for Copying 4.2
Making Copies on the Document Glass 4.2
Making Copies from the Automatic Document Feeder (For SCX-4116/4216F) 4.4
Setting Copy Options 4.5
Contrast 4.6
Image 4.6
Reduced/Enlarged Copy 4.7
Number of Copies 4.7
Using Special Copy Features 4.8
Auto Fit Copying 4.8
Clone Copying 4.9
Collation Copying 4.10
2-side Copying 4.10
2-up or 4-up Copying 4.11
Poster Copying 4.12
Changing the Default Settings 4.13
Setting the Time Out Option 4.14

Chapter 5: PRINTING

Printing a Document 5.2
Canceling a Print Job 5.5
Using a Favorite Setting 5.6
Using Help 5.6
Setting Paper Properties 5.7
Printing Multiple Pages on One Sheet of Paper (N-Up Printing) 5.8
Printing a Reduced or Enlarged Document 5.10

Fitting Your Document to a Selected Paper Size 5.11
Printing Posters 5.12
Using Watermarks 5.13
Using an Existing Watermark 5.13
Creating a Watermark 5.14
Editing a Watermark 5.15
Deleting a Watermark 5.15
Using Overlays 5.16
What is an Overlay? 5.16
Creating a New Page Overlay 5.16
Using a Page Overlay 5.18
Deleting a Page Overlay 5.19
Setting Graphic Properties 5.20
Setting Up the Locally Shared Printer 5.22
In Windows 9x/Me 5.22
In Windows NT 4.0/2000/XP 5.23

Chapter 6: SCANNING

Scanning Basics 6.2
Scanning Using the Samsung SmarThru 6.2
Scanning Process with TWAIN-enabled Software 6.5

Chapter 7: MAINTENANCE

Clearing the Memory 7.2
Cleaning Your Machine 7.3
Cleaning the Outside 7.3
Cleaning the Inside 7.3
Cleaning the Scan Unit 7.4
Maintaining the Toner Cartridge 7.5
Redistributing Toner 7.6
Replacing the Toner Cartridge 7.7
Setting the Notify Toner Option
(For SCX-4216F) 7.9
Cleaning the Drum 7.9
Consumables and Replacement Parts 7.10

Chapter 8: TROUBLESHOOTING

Clearing Document Jams (For SCX-4116/4216F) 8.2
- Input Misfeed 8.2
- Exit Misfeed 8.3
- Roller Misfeed 8.3

Clearing Paper Jams 8.4
- In the Paper Feed Area 8.4
- In the Paper Exit Area 8.5
- In the Fuser Area or Around the Toner Cartridge . 8.7
- In the Bypass Tray 8.8
- Tips for Avoiding Paper Jams 8.9

Clearing LCD Error Messages 8.10

Solving Problems 8.13
- Paper Feeding Problems 8.13
- Printing Problems 8.14
- Printing Quality Problems 8.17
- Fax Problems (For SCX-4216F) 8.21
- Copying Problems 8.23
- Scanning Problems 8.24
- Common Macintosh Problems 8.25

Chapter A: PRINTING FROM A MACINTOSH

Installing Software for Macintosh A.2
- Installing Software A.2
- Choosing Your Printer A.4

Printing a Document A.4

Using Advanced Printing Features A.6

Chapter B: SPECIFICATIONS

General Specifications B.2

Scanner and Copier Specifications B.3

Printer Specifications B.4

Facsimile Specifications (For SCX-4216F) B.5

Paper Specifications B.6
- Overview B.6
- Supported Sizes of Paper B.6
- Guidelines for Using Paper B.7
- Paper Specifications B.8
- Paper Output Capacity B.9
- Printer and Paper Storage Environment B.9

Important Precautions and Safety Information

When using this machine, these basic safety precautions should always be followed to reduce risk of fire, electric shock, and injury to people:

1. Read and understand all instructions.

2. Use common sense whenever operating electrical appliances.

3. Follow all warnings and instructions marked on the machine and in the literature accompanying the machine.

4. If an operating instruction appears to conflict with safety information, heed the safety information. You may have misunderstood the operating instruction. If you cannot resolve the conflict, contact your sales or service representative for assistance.

5. Unplug the machine from the AC wall socket and/or telephone jack before cleaning. Do not use liquid or aerosol cleaners. Use only a damp cloth for cleaning.

6. Do not place the machine on an unstable cart, stand or table. It may fall, causing serious damage.

7. Your machine should never be placed on, near or over a radiator, heater, air conditioner or ventilation duct.

8. Do not allow anything to rest on the power. Do not locate your machine where the cords will be abused by persons walking on them.

9. Do not overload wall outlets and extension cords. This can diminish performance, and may result in the risk of fire or electric shock.

10. Do not allow pets to chew on the AC power, telephone or PC interface cords.

11. Never push objects of any kind into the machine through case or cabinet openings. They may touch dangerous voltage points, creating a risk of fire or shock. Never spill liquid of any kind onto or into the machine.

12. You machine may have a heavy cover for optimal pressure on the document for the best scanning and/or faxing (usually the flatbed-type machine). In this case, replace the cover after placing document on the scan glass, by holding and moving it down slowly until it seats on its location.

13. To reduce the risk of electric shock, do not disassemble the machine. Take it to a qualified service technician when repair work is required. Opening or removing covers may expose you to dangerous voltages or other risks. Incorrect reassembly could cause electric shock when the unit is subsequently used.

14. Unplug the machine from the telephone jack, PC and AC wall outlet, and refer servicing to qualified service personnel under the following conditions:
    - When any part of the power cord, plug, or connecting cable is damaged or frayed.
    - If liquid has been spilled into the machine.

- If the machine has been exposed to rain or water.
- If the machine does not operate properly after instructions have been followed.
- If the machine has been dropped, or the cabinet appears damaged.
- If the machine exhibits a sudden and distinct change in performance.

15. Adjust only those controls covered by the operating instructions. Improper adjustment of other controls may result in damage, and may require extensive work by a qualified service technician to restore the machine to normal operation.

16. Avoid using this machine during a lightning storm. There may be a remote risk of electric shock from lightning. If possible, unplug the AC power and telephone cord for the duration of the lightning storm.

17. SAVE THESE INSTRUCTIONS.

Laser Safety Statement

The printer is certified in the U.S. to conform to the requirements of DHHS 21 CFR, chapter 1 Subchapter J for Class I(1) laser products, and elsewhere is certified as a Class I laser product conforming to the requirements of IEC 825.

Class I laser products are not considered to be hazardous. The laser system and printer are designed so there is never any human access to laser radiation above a Class I level during normal operation, user maintenance, or prescribed service condition.

WARNING

Never operate or service the printer with the protective cover removed from Laser/ Scanner assembly. The reflected beam, although invisible, can damage your eyes.

CAUTION - INVISIBLE LASER RADIATION WHEN THIS COVER OPEN. DO NOT OPEN THIS COVER.

VORSICHT - UNSICHTBARE LASERSTRAHLUNG, WENN ABDECKUNG GEÖFFNET. NICHT DEM STRAHL AUSSETZEN.

ATTENTION - RAYONNEMENT LASER INVISIBLE EN CAS D'OUVERTURE. EXPOSITION DANGEREUSE AU FAISCEAU.

ATTENZIONE - RADIAZIONE LASER INVISIBILE IN CASO DI APERTURA. EVITARE L'ESPOSIZIONE AL FASCIO.

PRECAUCIÓN - RADIACIÓN LASER INVISIBLE CUANDO SE ABRE. EVITAR EXPONERSE AL RAYO.

PERIGO - RADIAÇÃO LASER INVISÍVEL AO ABRIR. EVITE EXPOSIÇÃO DIRECTA AO FEIXE.

GEVAAR - ONZICHTBARE LASERSTRALEN BIJ GEOPENDE KLEP. DEZE KLEP NIET OPENEN.

ADVARSEL. - USYNLIG LASERSTRÅLNING VED ÅBNING, NÅR SIKKERHEDSBRYDERE ER UDE AF FUNKTION. UNDGÅ UDSAETTELSE FOR STRÅLNING.

ADVARSEL. - USYNLIG LASERSTRÅLNING NÅR DEKSEL ÅPNES. STIRR IKKE INN I STRÅLEN. UNNGÅ EKSPONERING FOR STRÅLEN.

VARNING - OSYNLIG LASERSTRÅLNING NÄR DENNA DEL ÄR ÖPPEN OCH SPÄRREN ÄR URKOPPLAD. BETRAKTA EJ STRÅLEN. STRÅLEN ÄR FARLIG.

VARO! - AVATTAESSA JA SUOJALUKITUS OHITETTAESSA OLET ALTTIINA NÄKYMÄTTÖMÄLLE LASER-SÄTEILYLLE ÄLÄ KATSO SÄTEESEEN.

注 意 - 严禁揭开此盖, 以免激光泄露灼伤

주 의 - 이 덮개를 열면 레이저광에 노출될 수 있으므로 주의하십시오.

Ozone Safety

During normal operation, this machine produces ozone. The ozone produced does not present a hazard to the operator. However, it is advisable that the machine be operated in a well ventilated area.

If you need additional information about ozone, please request your nearest Samsung dealer.

Power Saver

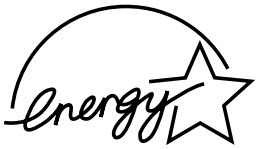

This machine contains advanced energy conservation technology that reduces power consumption when it is not in active use.

When the machine does not receive data for an extended period of time, power consumption is automatically lowered.

The energy star emblem does not represent EPA endorsement of any machine or service.

Radio Frequency Emissions

FCC Information to the User

This equipment has been tested and found to comply with the limits for a Class B digital device, pursuant to Part 15 of the FCC Rules. These limits are designed to provide reasonable protection against harmful interference in a residential installation. This equipment generates, uses and can radiate radio frequency energy and, if not installed and used in accordance with the instructions, may cause harmful interference to radio communications. However, there is no guarantee that interference will not occur in a particular installation. If this equipment does cause harmful interference to radio or television reception, which can be determined by turning the equipment off and on, the user is encouraged to try to correct the interference by one or more of the following measures:

- Reorient or relocate the receiving antenna.
- Increase the separation between the equipment and receiver.
- Connect the equipment into an outlet on a circuit different from that to which the receiver is connected.
- Consult the dealer or experienced radio TV technician for help.

CAUTION: Change or modifications not expressly approved by the manufacturer responsible for compliance could void the user's authority to operate the equipment.

Canadian Radio Interference Regulations

This digital apparatus does not exceed the Class B limits for radio noise emissions from digital apparatus as set out in the interference-causing equipment standard entitled “Digital Apparatus”, ICES-003 of the Industry and Science Canada.

Cet appareil numérique respecte les limites de bruits radioélectriques applicables aux appareils numériques de Classe B prescrites dans la norme sur le matériel brouilleur: “Appareils Numériques”, ICES-003 édictée par l’Industrie et Sciences Canada.

Fax Branding

The Telephone Consumer Protection Act of 1991 makes it unlawful for any person to use a computer or other electronic device to send any message via a telephone facsimile machine unless such message clearly contains in a margin at the top or bottom of each transmitted page or on the first page of the transmission the following information:

(1) the date and time of transmission

(2) identification of either business, business entity or individual sending the message; and

(3) telephone number of either the sending machine, business, business entity or individual.

Refer to the Facsimile User’s Guide for instructions on how to enter this information into your machine’s memory.

The Telephone Company may make changes in its communications facilities, equipment operations, or procedures where such action is reasonably required in the operation of its business and is not inconsistent with the rules and regulations in FCC Part 68. If such changes can be reasonably expected to render any customer terminal equipment incompatible with telephone company communications facilities, or require modification or alteration of such terminal equipment, or otherwise materially affect its use or performance, the customer shall be given adequate notice in writing, to allow the customer an opportunity to maintain uninterrupted service.

Ringer Equivalence Number

The Ringer Equivalence Number and FCC Registration Number for this machine may be found on the label located on the bottom or rear of the machine. In some instances you may need to provide these numbers to the telephone company.

The Ringer Equivalence Number (REN) is a measure of the electrical load placed on the telephone line, and is useful for determining whether you have “overloaded” the line. Installing several types of equipment on the same telephone line may result in problems making and receiving telephone calls, especially ringing when your line is called. The sum of all Ringer Equivalence Numbers of the equipment on your telephone line should be less than five in order to assure proper service from the telephone company. In some cases, a sum of five may not be usable on your line. If any of your telephone equipment is not operating properly, you should immediately remove it from your telephone line, as it may cause harm to the telephone network.

WARNING:

FCC Regulations state that changes or modifications to this equipment not expressly approved by the manufacturer could void the user's authority to operate this equipment. In the event that terminal equipment causes harm to the telephone network, the telephone company should notify the customer that service may be stopped. However, where prior notice is impractical, the company may temporarily cease service, providing that they:

a) promptly notify the customer.

b) give the customer an opportunity to correct the equipment problem.

c) inform the customer of the right to bring a complaint to the Federal Communication Commission pursuant to procedures set out in FCC Rules and Regulations Subpart E of Part 68.

You should also know that:

- Your machine is not designed to be connected to a digital PBX system.
- If you intend to use a computer modem or fax modem on the same phone line as your machine, you may experience transmission and reception problems with all the equipment. It is recommended that no other equipment, except for a regular telephone, share the line with your machine.
- If your area experiences a high incidence of lightning or power surges, we recommend that you install surge protectors for both the power and the telephone lines. Surge protectors can be purchased from your dealer or telephone and electronic specialty stores.
- When programming emergency numbers and/or making test calls to emergency numbers, use a non-emergency number to advise the emergency service dispatcher of your intentions. The dispatcher will give you further instructions on how to actually test the emergency number.
- This machine may not be used on coin service or party lines.
- This machine provides magnetic coupling to hearing aids.
- You may safely connect this equipment to the telephone network by means of a standard modular jack, USOC RJ-11C.

Declaration of Conformity (European Countries)

Approvals and Certifications

The CE marking applied to this product symbolizes Samsung Electronics Co., Ltd. Declaration of Conformity with the following applicable 93/68/EEC Directives of the European Union as of the dates indicated:

January 1, 1995: Council Directive 73/23/EEC Approximation of the laws of the member states related to low voltage equipment.

January 1, 1996: Council Directive 89/336/EEC (92/31/EEC), approximation of the laws of the Member States related to electromagnetic compatibility.

March 9, 1999: Council Directive 1999/5/EC on radio equipment and telecommunications terminal equipment and the mutual recognition of their conformity.

A full declaration, defining the relevant Directives and referenced standards can be obtained from your Samsung Electronics Co., Ltd. representative.

EC Certification

Certification to 1999/5/EC Radio Equipment & Telecommunications Terminal Equipment Directive (FAX)

This Samsung product has been self-certified by Samsung for pan-European single terminal connection to the analogue public switched telephone network (PSTN) in accordance with Directive 1999/5/EC. The product has been designed to work with the national PSTNs and compatible PBXs of the European countries:

In the event of problems, you should contact the Euro QA Lab of Samsung Electronics Co., Ltd. in the first instance.

The product has been tested against TBR21. To assist in the use and application of terminal equipment which complies with this standard, the European Telecommunication Standards Institute (ETSI) has issued an advisory document (EG 201 121) which contains notes and additional requirements to ensure network compatibility of TBR21 terminals. The product has been designed against, and is fully compliant with, all of the relevant advisory notes contained in this document.

Replacing the Fitted Plug (for UK Only)

IMPORTANT

The mains lead for this machine is fitted with a standard (BS 1363) 13 amp plug and has a 13 amp fuse. When you change or examine the fuse, you must re-fit the correct 13 amp fuse. You then need to replace the fuse cover. If you have lost the fuse cover, do not use the plug until you have another fuse cover.

Please contact the people from you purchased the machine.

The 13 amp plug is the most widely used type in the UK and should be suitable. However, some buildings (mainly old ones) do not have normal 13 amp plug sockets. You need to buy a suitable plug adaptor. Do not remove the moulded plug.

WARNING

If you cut off the moulded plug, get rid of it straight away.
You cannot rewire the plug and you may receive an electric shock if you plug it into a socket.

IMPORTANT WARNING: You must earth this machine.

The wires in the mains lead have the following color code:

- Green and Yellow: Earth
- Blue: Neutral
- Brown: Live

If the wires in the mains lead do not match the colors marked in your plug, do the following:

You must connect the green and yellow wire to the pin marked by the letter “E” or by the safety `Earth symbol' or colored green and yellow or green.

You must connect the blue wire to the pin which is marked with the letter “N” or colored black.

You must connect the brown wire to the pin which is marked with the letter “L” or colored red.

You must have a 13 amp fuse in the plug, adaptor, or at the distribution board.

MEMO

1 GETTING STARTED

Thank you for purchasing this Samsung multifunctional product. Your machine provides printing, copying, scanning, and faxing (SCX-4216F only) functions!

This chapter gives you step-by-step instructions for setting up your machine.

This chapter includes:

- **Unpacking**
- **Understanding the Component Location**
- **Installing the Toner Cartridge**
- **Loading Paper**
- **Making Connections**
- **Turning the Machine On**
- **Changing the Display Language**
- **Setting the Paper Type and Size**
- **Using the Save Modes**

Unpacking

Remove the machine and all accessories from the packing carton. Make sure that the machine has been packed with the following items:

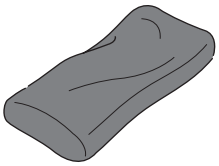

Starter Toner Cartridge

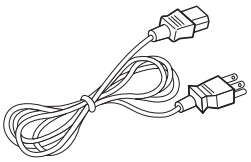

AC Power Cord[1]

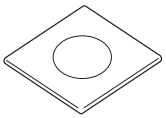

CD-ROM[2]

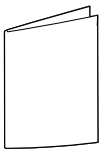

Quick Install Guide

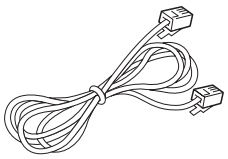

Telephone Line Cord[1]
(only for SCX-4216F)

1. The appearance of the power cord and the telephone line cord may differ according to your country's specifications.
2. The CD-ROM contains the MFP driver, SmarThru software, the User's Guides and the Adobe Acrobat Reader program.

NOTES:

- You should use the telephone line cord which is supplied with your machine. If you are replacing it with another vendor's, it should be AWG #26 or lower gage.
- Power cord must be plugged into a grounded power socket.
- You can purchase and install the optional Network Print Server. For details, refer to the User's Guide supplied with your Network Print Server.

1 Remove the packing tapes from the front, back and sides of the machine.

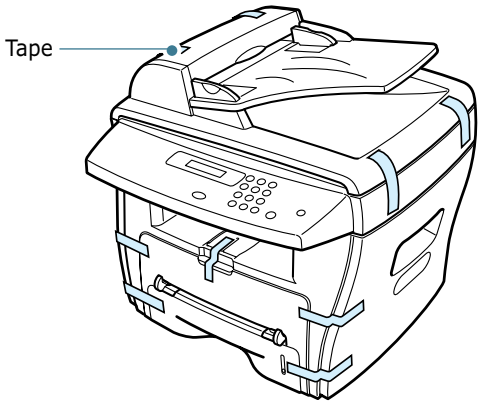

2 Pull the paper tray open and remove the packing material from the tray.

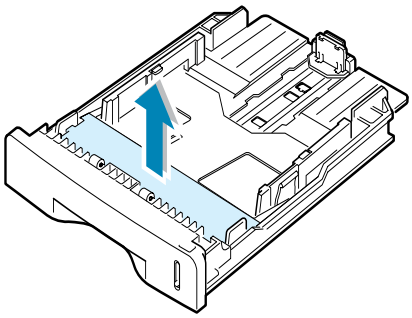

Selecting a Location

Select a level, stable place with adequate space for air circulation. Allow extra space for opening covers and trays. The area should be well-ventilated and away from direct sunlight or sources of heat, cold and humidity. Do not set the printer close to the edge of your desk or table.

Clearance Space

Front: 482.6 mm (enough space so that the paper tray can be removed)

Back: 100 mm (enough space for ventilation)

Right: 100 mm

Left: 100 mm (enough space for ventilation)

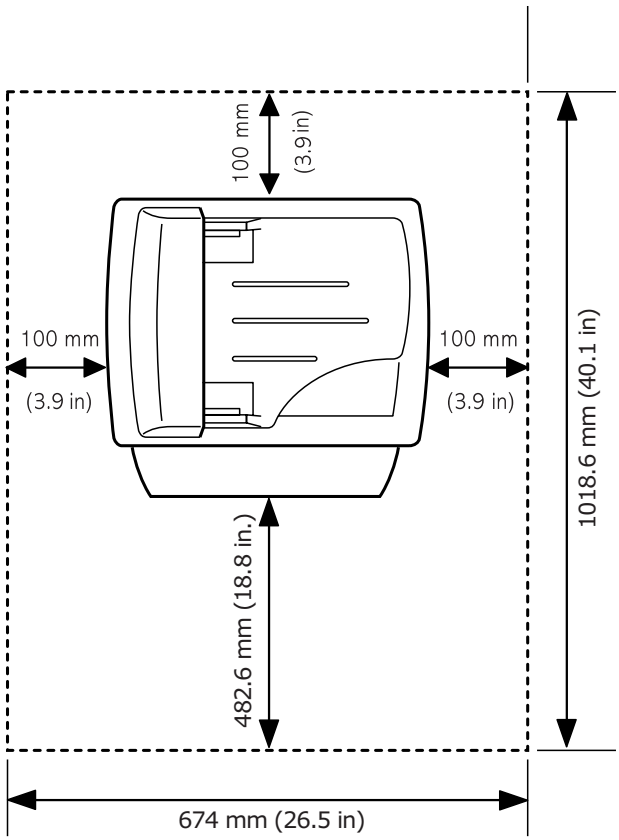

Understanding the Component Location

These are the main components of your machine.

Front View

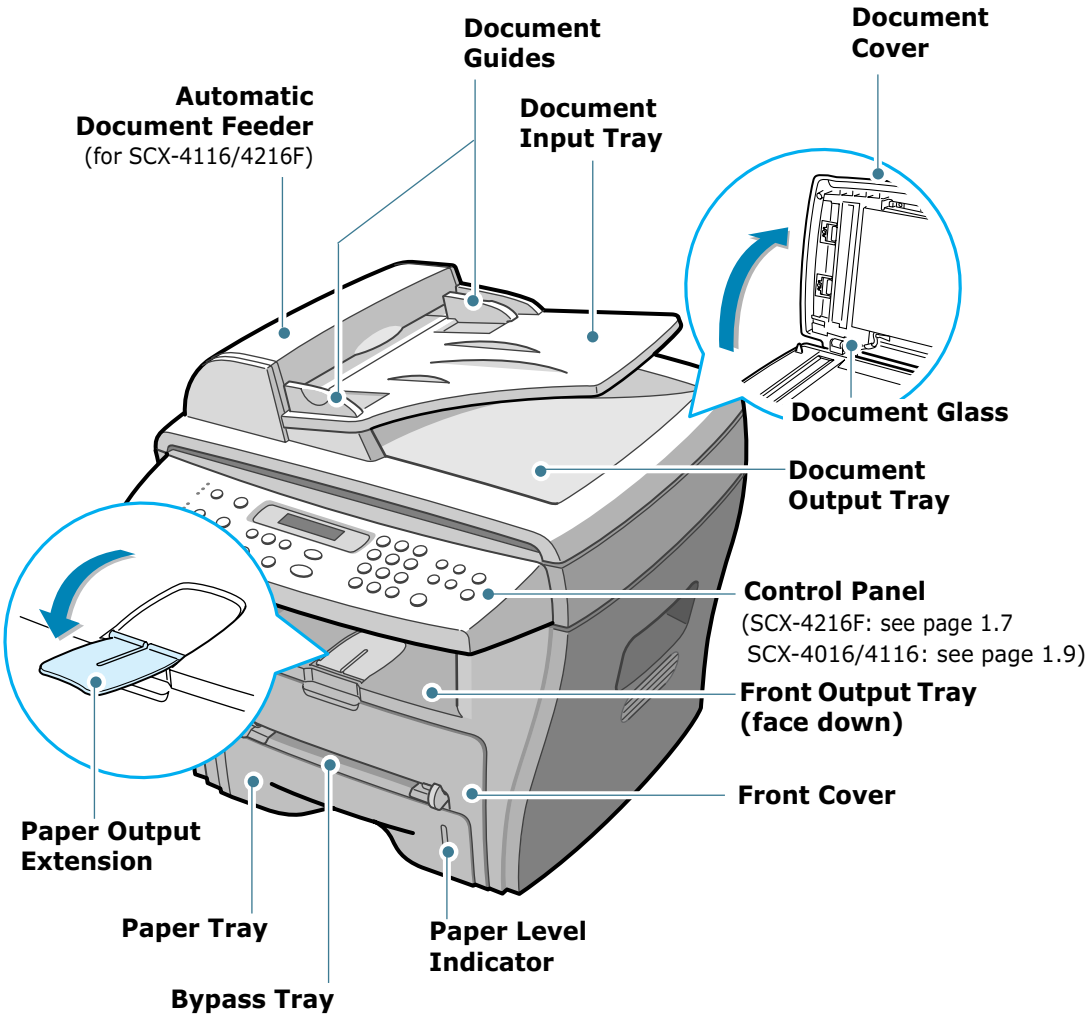

* The figure above shows a SCX-4216F.

Rear View

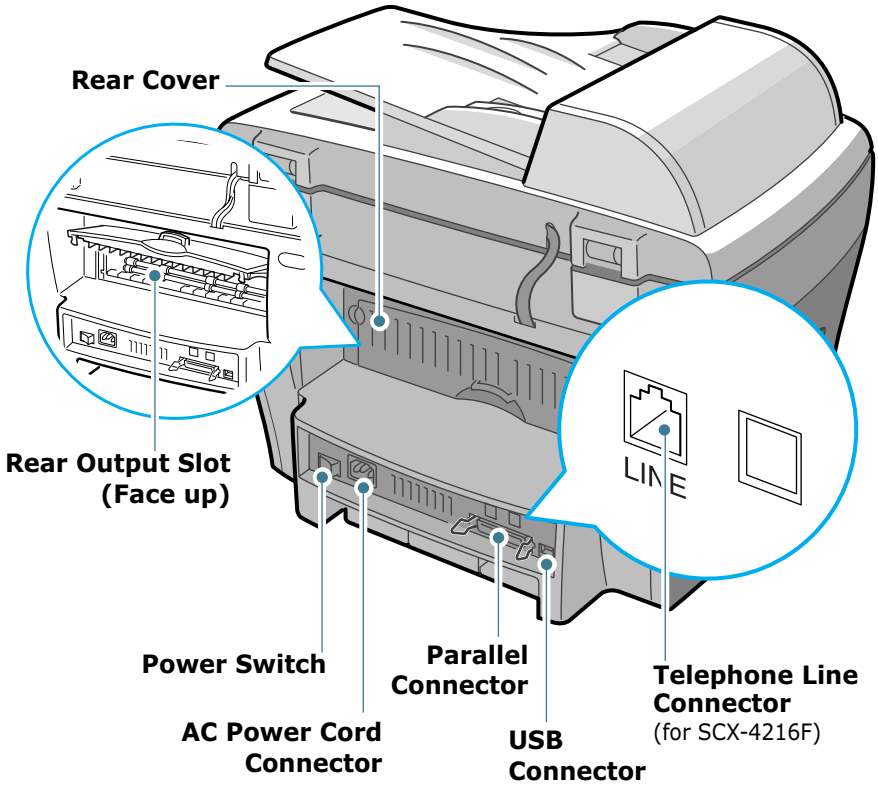

* The figure above shows a SCX-4216F.

Control Panel Functions

SCX-4216F

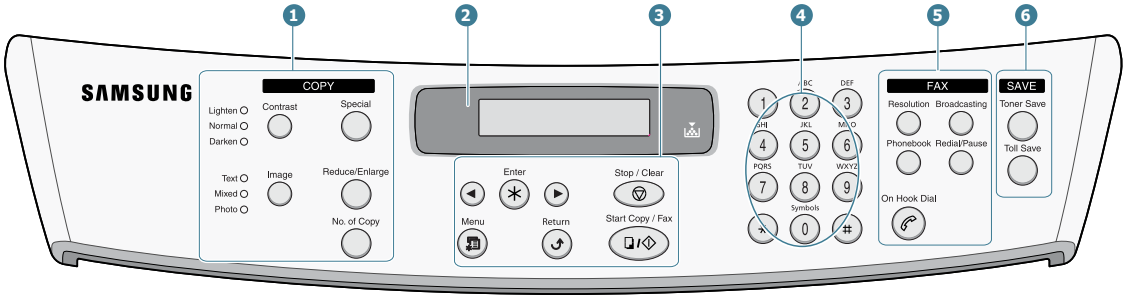

1 COPY	Contrast	Adjusts the brightness of the documents for the current copy job.
	Image	Selects the document type for the current copy job.
	Special	Allows you to use special copy features, such as Clone, Collation, Auto fit, 2-side, N-up (multiple pages on a sheet) and Poster copying.
	Reduce/Enlarge	Makes a copy smaller or larger than the original.
	No.of Copy	Selects the number of copies.
2		Displays the current status and prompts during an operation.
		Turns on when the toner cartridge is empty.
3		Scrolls through the options available for the selected menu item.
	Enter	Confirms the selection on the display.
	Menu	Enters the menu mode and scrolls through the menus available.

3	Return	Sends you back to the upper menu level.
	Stop / Clear	Stops an operation at any time. In the standby mode, clears/cancels the copy options, such as the contrast, the image setting, the copy size and the number of copies.
	Start Copy / Fax	Starts a job.
4		Dials a number or enters alphanumeric characters.
5 FAX	Resolution	Adjusts the resolution of the documents for the current fax job.
	Broadcasting	Allows you to send a fax to multiple destinations.
	Phonebook	• Allows you to store frequently-dialed fax numbers using a one or two-digit speed dial or group number for automatic dialing and edit the stored numbers. • Allows you to print a Phonebook list.
	Redial/Pause	Redials the last number in the standby mode or inserts a pause into a fax number in edit mode.
	On Hook Dial	Engages the telephone line.
6 SAVE	Toner Save	Allows you to save on toner by using less toner to print a document.
	Toll Save	Allows you to save on call costs by sending a fax at a preset toll-saving time. Using this feature, you can take advantage of lower long distance rates at night, for example.

SCX-4016/4116

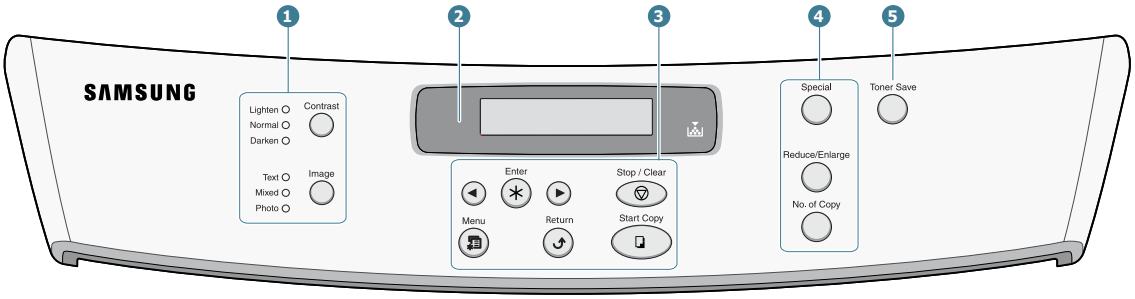

1	Contrast	Adjusts the brightness of the documents for the current copy job.
	Image	Selects the document type for the current copy job.
2		Displays the current status and prompts during an operation.
		Turns on when the toner cartridge is empty.
3		Scrolls through the options available for the selected menu item.
	Enter	Confirms the selection on the display.
	Menu	Enters the menu mode and scrolls through the menus available.
	Return	Sends you back to the upper menu level.
	Stop / Clear	Stops an operation at any time. In the standby mode, clears/cancels the copy options, such as the contrast, the image setting, copy size and the number of copies.
	Start Copy	Starts a job.

4	Special	Allows you to use special copy features, such as Clone, Collation, Auto fit, 2-side, N-up (multiple pages on a sheet) and Poster copying.
	Reduce/Enlarge	Makes a copy smaller or larger than the original.
	No.of Copy	Selects the number of copies.
5	Toner Save	Allows you to save on toner by using less toner to print a document.

Installing the Toner Cartridge

1 Open the front cover.

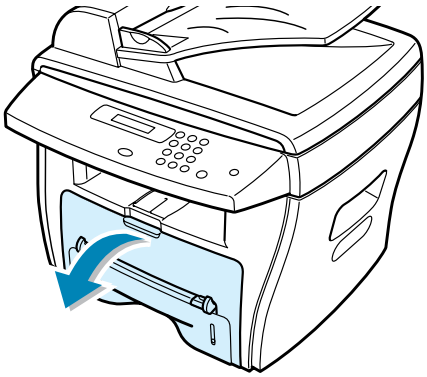

2 Remove the starter toner cartridge from its bag. Gently shake the cartridge to distribute the toner.

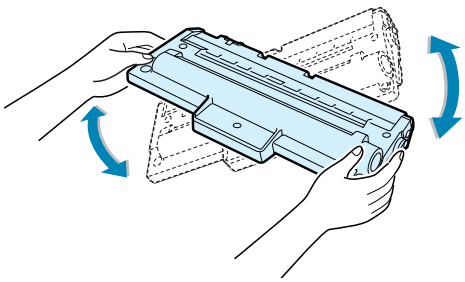

Thoroughly shaking the cartridge will assure the maximum copies per cartridge.

3 Slide the toner cartridge into the machine until it locks into place completely.

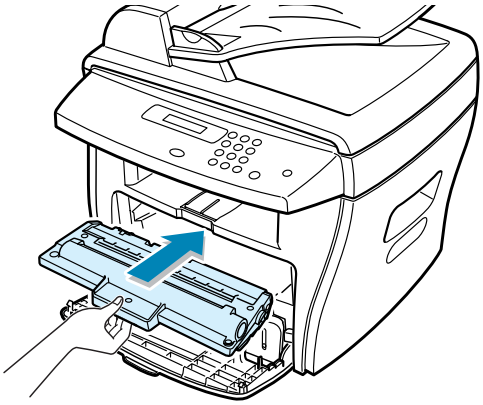

4 Close the front cover.

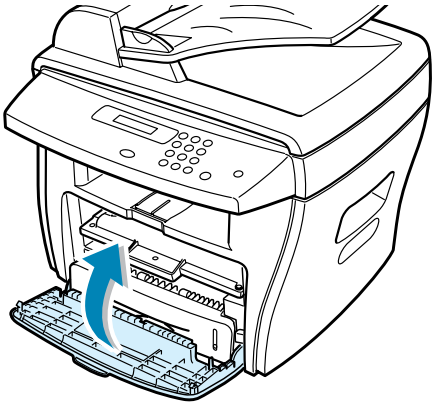

NOTE: When the toner cartridge needs to be replaced, the indicator turns on and the "Toner Empty" message appears on the display. To replace the toner cartridge, see page 7.7.

Loading Paper

The paper tray can hold a maximum of 250 sheets of 20 lb plain paper. For copying or faxing, you can use A4-, Letter-, or Legal-sized paper only. For printing a PC file, you can use many different sizes of paper. The paper tray is preset for using Letter-sized paper.

To load a stack of Letter-sized paper:

1 Pull open the paper tray.

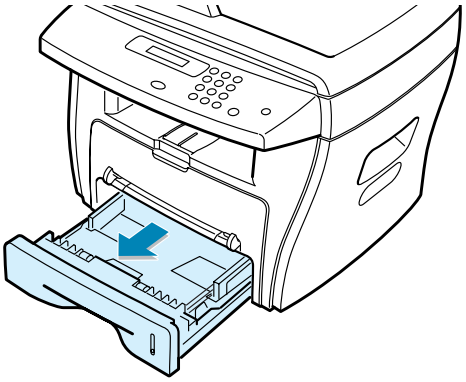

2 Push down on the pressure plate until it locks into position.

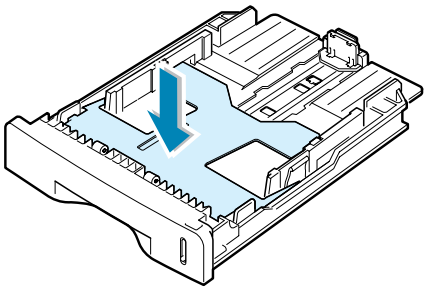

3 Fan the edges of the paper stack to separate the pages. Then tap the stack on a flat surface to even it up.

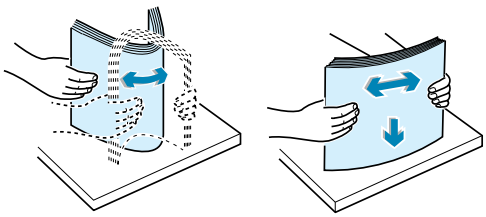

4 Insert the paper stack into the paper tray.

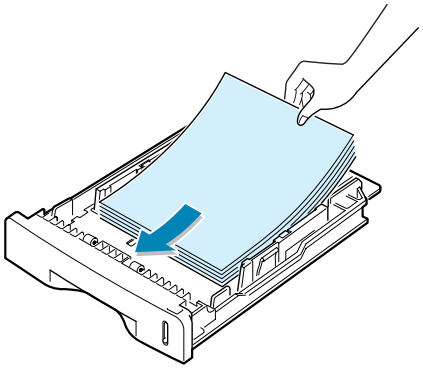

If you want to load a different sized paper, you need to adjust the paper guides. For details, see page 1.14.

5 Pay attention to the paper limit mark on the left inside wall of the tray. Paper overloading may cause paper jams.

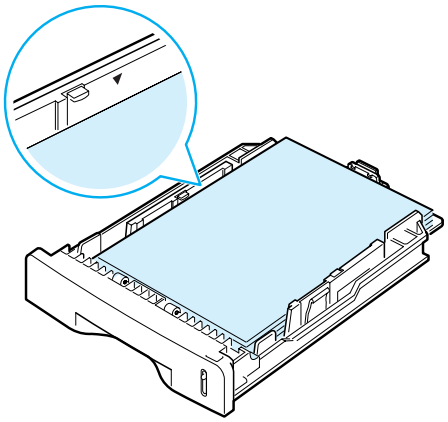

6 Slide the paper tray back in.

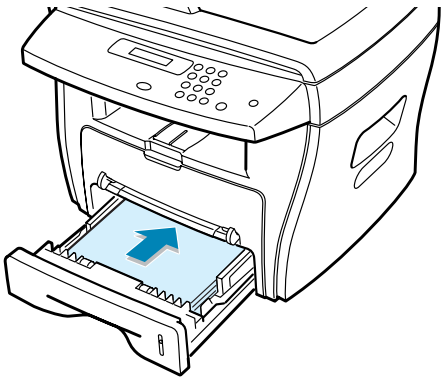

After you load paper, you need to set up your machine for the paper type and size you loaded. See page 1.18 for copying and faxing or page 5.7 for PC-printing.

Changing the Paper Size in the Paper Tray

To load longer sizes of paper, such as Legal-sized paper, you need to adjust the paper guides to extend the paper tray.

1 Locate the paper size to which the rear paper length guide fits. The paper sizes are marked at the bottom of the tray.

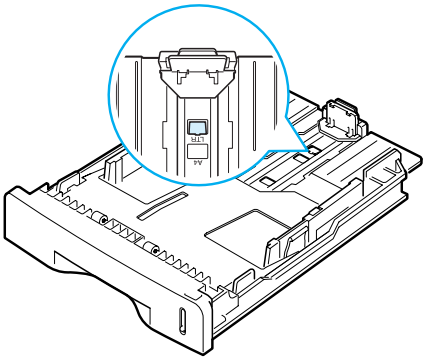

2 Pressing and unlatching the guide lock, slide the guide out until it locks to the mark of the paper size you want.

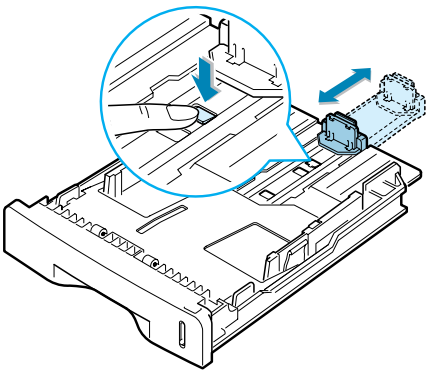

3 While squeezing the paper width guide as shown, move it toward the stack of paper until it lightly touches the side of the stack.

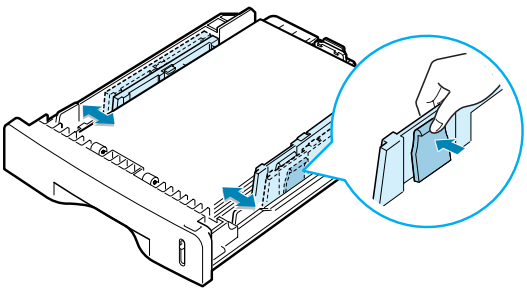

NOTES:

- Do not push the paper width guide far enough to cause the materials to warp.
- If you do not adjust the paper width guide, it may cause paper jams.

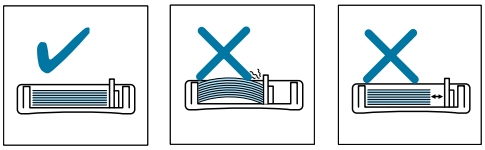

Making Connections

1 **If you have SCX-4016/4116:**

Skip this step and proceed to Step 2.

If you have SCX-4216F:

Plug the supplied telephone line cord into the **LINE** jack and the other end into the wall jack.

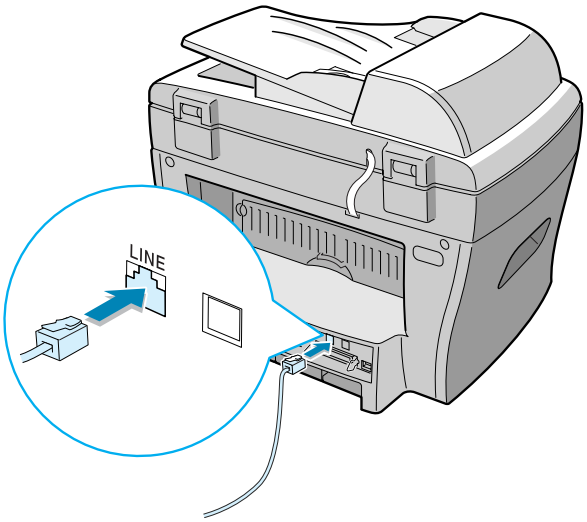

2 If you want to use a parallel printer cable, purchase only IEEE-1284 compliant parallel cable and connect it to the parallel connector on your machine.

Push the metal clips down to fit inside the notches on the cable plug.

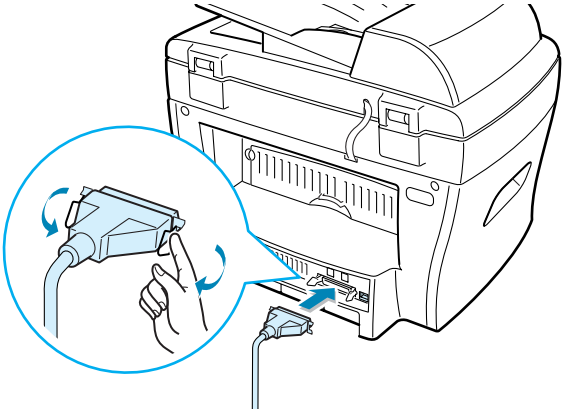

Connecting the printer to the USB port of the computer requires a certified USB cable. You will need to buy a USB 1.1 compliant cable that is within 3 m in length. Connect it to the USB connector on your machine.

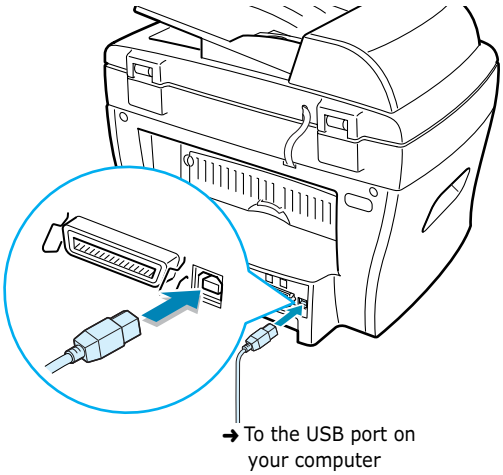

NOTES:

- You only need to connect one of the cables mentioned above.
- If you are using a USB cable, you must be running Windows 98/Me/2000/XP.
- When using the USB connection, your machine provides two USB modes; Fast and Slow. Fast is the default mode. Some PC users may experience poor USB function in the default mode. If this occurs, select the Slow mode to achieve successful results. For details about changing the USB mode, see page 8.16.

Turning the Machine On

1 Plug one end of the supplied three-pronged electrical type cord into the AC socket on the machine and the other end into a properly grounded AC outlet.

2 Press the power switch to turn the machine on. "Warming Up Please Wait" appears on the display indicating that the machine is now on.

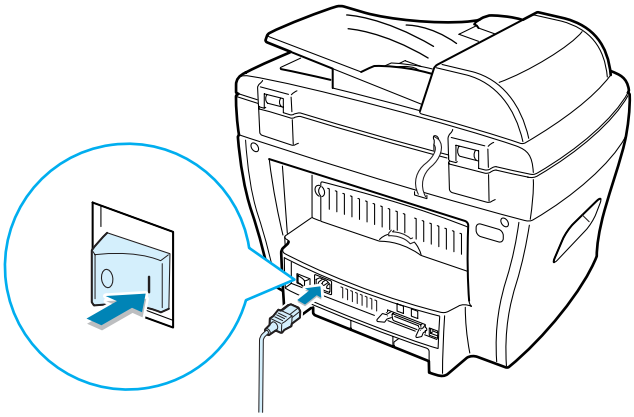

To view your display text in another language, see below.

CAUTIONS:

- The fusing areas at the rear part of the inside of your machine is hot when powered. Be careful not to be burned when you access this area.
- Do not disassemble the machine when it is powered. If you do, it may give you an electric shock.

Changing the Display Language

To change the language that displays on the display of the control panel, follow these steps:

1 Press **Menu** until "Machine Setup" appears on the top line of the display.

2 Press the scroll button (◄ or ►) until "Language" appears on the bottom line of the display.

3 Press **Enter**. The current setting appears on the bottom line of the display.

4 Press the scroll button (◄ or ►) until the language you want appears on the display.

5 Press **Enter** to save the selection.

6 To return to the standby mode, press **Stop/Clear**.

Setting the Paper Type and Size

After loading paper in the paper tray, you need to set the paper type and size using the control panel buttons. These settings will apply to copy mode. For PC-printing, you need to select the paper type and size in the application program you use.

1 Press **Menu**.

The display shows "Paper Setting" on the top line and the first menu item, "Paper Type," on the bottom line.

2 Press **Enter** to access the menu item.

3 Use the scroll button (◄ or ►) to find the paper type you are using and press **Enter** to save it.

The display shows the next menu item, "Paper Size," on the bottom line.

4 Press **Enter** to access the menu item.

5 Press **Enter** when "Tray Paper" displays on the bottom line.

6 Use the scroll button (◄ or ►) to find the paper size you are using and press **Enter** to save it.

7 To return to the standby mode, press **Stop/Clear**.

Using the Save Modes

Toner Save Mode

The toner save mode allows your machine to use less toner on each page. Activating this mode will extend the life of the toner cartridge longer than normal mode, but it will reduce the print quality.

To turn the toner save mode on or off, press **Toner Save**.

- If the button backlight is on, the mode is active and the machine uses less toner when printing a document.
- If the button backlight is off, the mode is deactivated and the machine prints with the normal quality.

NOTE: For PC-printing, you can also turn on or off the toner save mode in the printer properties. See page 5.20.

Power Save Mode

The power save mode allows your machine to reduce power consumption when it is not in actual use. You can turn this mode on by selecting the length of time for which the machine waits after a job is printed before it switches to a reduced power state.

1. Press **Menu** until "Machine Setup" appears on top line of the display.

2. Press the scroll button (◄ or ►) until "Power Save" appears on the bottom line. Press **Enter**.

3. Press the scroll button (◄ or ►) to display "On" on the bottom line and press **Enter**.

   Selecting "Off" means that the power save mode turns off.

4. Press the scroll button (◄ or ►) until the desired time settings appears.

   The available options are 5, 10, 15, 30 and 45 (minutes).

5. Press **Enter** to save the selection.

6. To return to the standby mode, press **Stop/Clear**.

CCD Power Save Mode

The scan lamp under the document glass automatically turns off when it is not in actual use to reduce power consumption and extend the lamp life. The lamp will automatically wake up after some warm-up time when you start scanning.

You can set the length of time for which the scan lamp waits after a scan job is completed before it switches to the power save mode.

1. Press **Menu** until "Machine Setup" appears on top line of the display.

2. Press the scroll button (◄ or ►) until "CCD Power Save" appears on the bottom line. Press **Enter**.

3. Press the scroll button (◄ or ►) until the desired time setting appears on the bottom line.

   The available time options are 1, 4, 8 and 12 (hours). Selecting "Off" means that the lamp always turns off.

4. Press **Enter** to save the selection.

5. To return to the standby mode, press **Stop/Clear**.

2 INSTALLING SOFTWARE

This chapter gives you information for installing the supplied Samsung software. You must install the Samsung software to use your machine as a printer and a scanner.

This chapter includes:

- **About Samsung Software**
- **System Requirements**
- **Installing Samsung Software in Windows**
- **Uninstalling Samsung Software**

About Samsung Software

You must install software using the supplied CD-ROM after you have set up your machine and connected it to your computer. The CD-ROM includes:

- Samsung software
- User's Guides
- Adobe Acrobat Reader

The CD-ROM provides you with the following software:

Windows MFP Driver

To use your machine as a printer and scanner in Windows, you must install the MFP driver. For information about installing the MFP driver in Windows, see page 2.4.

Macintosh Printer Driver

You can use your machine with Macintosh. For information about installing the printer driver and printing documents from a Macintosh, see Appendix A, "Printing from a Macintosh."

Remote Control Panel

This Windows-based program is only available for SCX-4216F. It is automatically installed when you install the MFP driver. For information about using the program, refer to the Facsimile User's Guide.

USB Driver

You must first install the USB driver for the USB connection in Windows 98/Me. For information about installing the USB driver, see page 2.8. In Windows 2000/XP, the USB port is provided so that you don't have to install the USB driver.

SmarThru Software

SmarThru is the accompanying software for your multifunctional machine. SmarThru contains a powerful image editor that allows you to edit images in many ways and also includes powerful Internet mail client software.

With SmarThru, you can save the scanned images in a dedicated storage area for subsequent editing, sending via e-mail or fax, printing and processing by other programs of your choice.

OCR Software (AnyPage Lite)

OCR (Optical Character Recognition) is software that has the ability to recognize most character formats so that a scanned document can be read and edited with word processing software.

System Requirements

Before you begin, ensure that your system meets the minimum requirements.

Supported Operating System

- Windows 95 OSR2
- Windows 98/Windows 98 SE
- Windows Me
- Windows NT 4 Workstation or Server with Service Pack 3
- Windows 2000 Professional or Advanced Server
- Windows XP Home edition or Professional.

Minimal Requirements

- Disk space: 120 MB for installation
- Memory: 64 MB
- CPU: Pentium II 233 or higher
- Required software: Internet Explorer 4.01

Recommended

- Disk space: 220 MB for installation
- Memory: 128 MB
- CPU: Pentium II 400 or higher
- Required software: Internet Explorer 5.5

NOTES:

- For Windows NT 4.0/2000/XP, the system administrator should install the software.
- Windows 95 versions prior to OSR2 are not recommended due to incompatibility with OLE/COM libraries.

Installing Samsung Software in Windows

NOTES:

- Cancel the "New Hardware Found" window when your computer boots up.
- Make sure that your machine is plugged in and connected to your computer's parallel port or USB port **before installing software**. Windows 95 and Windows NT 4.0 do not support the USB connection.

1 Insert the supplied CD-ROM into your CD-ROM drive.

The CD-ROM should automatically run and an installation window appears.

If the installation window does not appear, click **Start** and then **Run**. Type **X:Autorun.exe**, replacing "**X**" with the letter of your drive and click **OK**.

2 If you are asked to select the language, choose the desired language.

3 Click **Install the Samsung Software on your PC**.

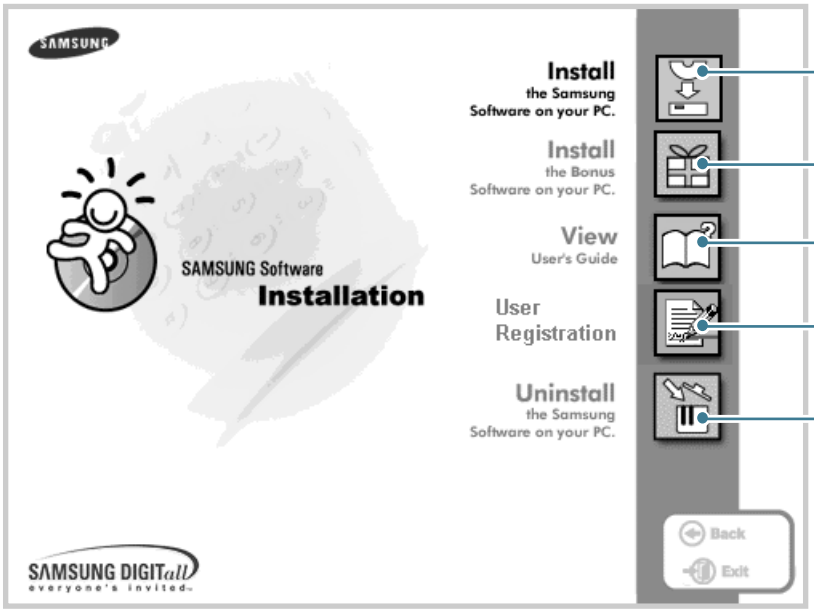

Installs the Samsung Software on your PC.

Installs the Adobe Acrobat Reader program on your PC.

Opens the User's Guides in PDF file format.

Accesses the Samsung web site to allow you a user registration.

Uninstalls the Samsung Software. See page 2.12.

4 Click **Next**.

5 Follow the on-screen instructions and click **Next**.

6 Click **Next**.

7 Select the installation type and click **Next**.

The software installation supports three types of setup:

- **Typical**: Program will be installed with the most common options and is recommended for most users.
- **Compact**: Only the MFP driver will be installed.
- **Custom**: You may choose the options you want to install.

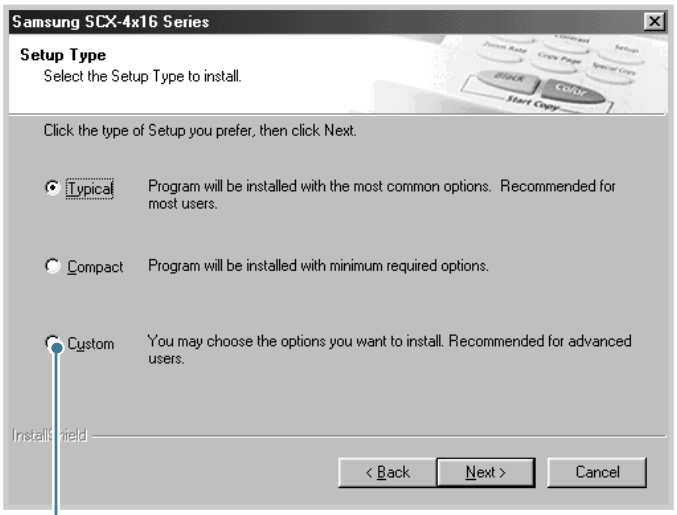

If you select the Custom installation, you may choose the components you want to install.

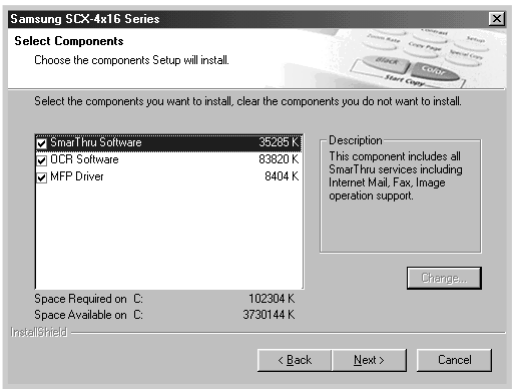

- **SmarThru Software:** to scan and edit images and to work with electronic documents.
- **OCR Software:** AnyPage Lite software to enable OCR.
- **MFP Driver:** to print and scan.

8 Choosing the **SmarThru networking** option allows you to share the modems on other computer in your network, and the scan device or to access similar devices on other computers.

Stand-alone configuration does not allow you to use any networking features, such as Remote Fax or Remote Scan service.

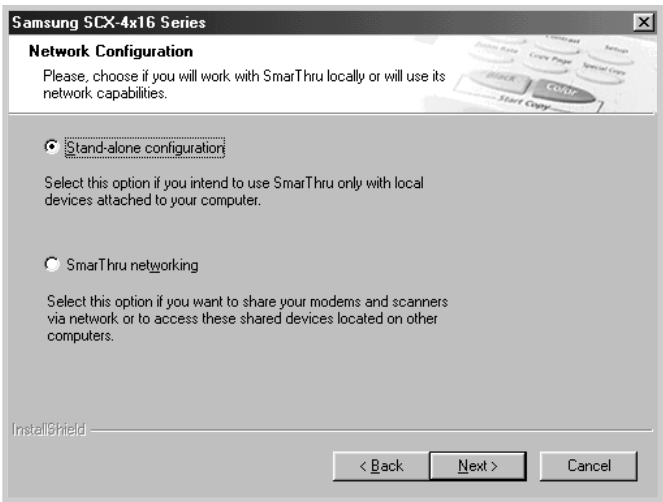

If you selected **SmarThru networking**, you can elect to install it as a Server, a Client or both.

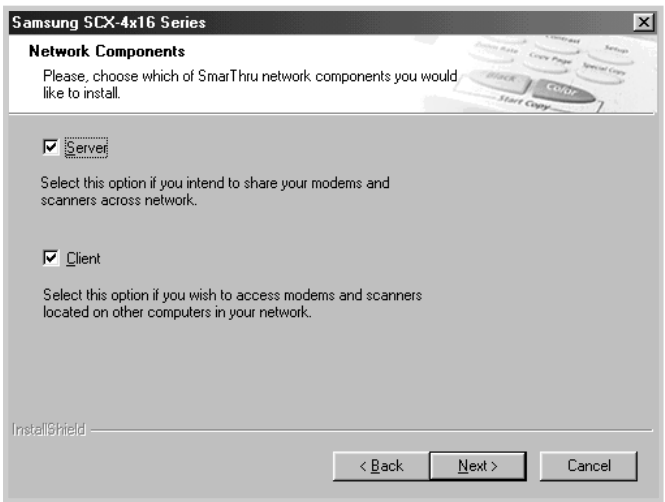

The **Server** option allows you to share a local fax modem and/or a scanner over a LAN. You can control sharing by managing a remote service user. The **Client** option allows you to use Remote Fax or Remote Scan services provided by a SmarThru Server over a LAN. You need to have a client account provided by the server. For details on Remote Fax/ Scan Services, refer to the SmarThru User's Guide.

9 Click **Next**.

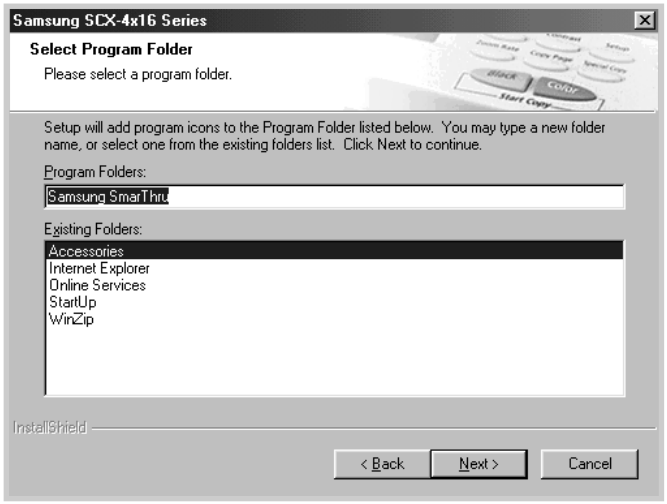

10 If you want to register yourself as a user of the Samsung printer, click **Next**. You can access the Samsung web site.

If not, remove the check mark and click **Next**.

11 When the installation is complete, click **Finish**.

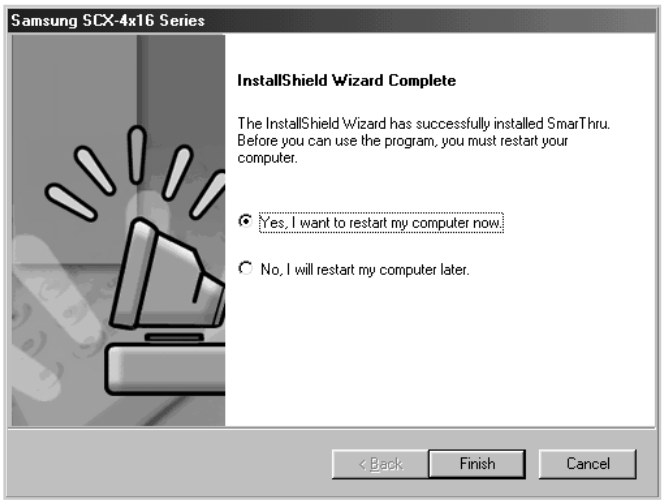

If your computer does not shut down and restart automatically, you must shut it down manually and restart it before the changes are saved.

NOTE: When you install the software, the Digital Signature Not Found window appears in Windows 2000 and Windows XP. Click **OK** in Windows 2000 and click **Continue Anyway** in Windows XP.

Installing the USB Driver in Windows 98/ Me

1 Connect the printer to your computer using the USB cable and turn them on. For further details, see page 1.16.

2 The Add New Hardware Wizard window appears. Click **Next**.

3 Place the CD-ROM in the CD-ROM drive and check **Search for the best driver for your device** and click **Next**.

4 Check **CD-ROM drive** and click **Browse**, and choose **x:\USB** (where **x** is the drive letter for the CD-ROM drive). Click **Next**.

5 Click **Next**. The USB driver is installed.

6 When the installation is complete, click **Finish**.

7 When the language selection window appears, select the appropriate language.

NOTE: If you already installed the printer software, this window don't appear.

8 Follow the instructions on the window to complete the printer software installation. For further details, see page 2.4.

NOTES:

- If you want to use your machine with a parallel cable, remove the USB cable and connect the parallel cable. Then reinstall the MFP driver.
- If your machine don't work properly, reinstall the MFP driver.

Uninstalling Samsung Software

Uninstall is required if you are upgrading the software or if your installation fails. You can uninstall all software including SmarThru and MFP driver, using the CD-ROM or uninstall the desired item using the Windows unInstallShield.

Uninstalling the MFP Driver

1 From the **Start** menu, select **Programs**, and then select **Samsung SCX-4x16 Series**.

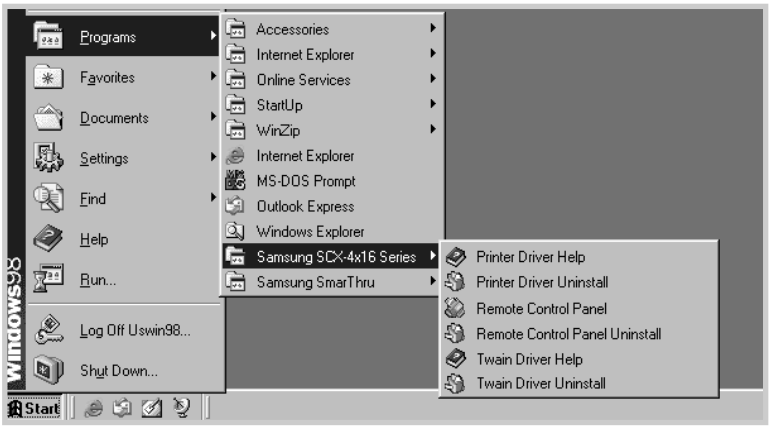

2 You can select a component in the MFP driver to uninstall individually.

If you want to uninstall the printer driver, select **Printer Driver Uninstall**.

If you want to uninstall the twain driver, select **Twain Driver Uninstall**.

For SCX-4216F, if you want to uninstall the Remote Control Panel, select **Remote Control Panel Uninstall**.

3 If your computer asks you to confirm your selection, click **Yes** or **OK**.

The selected driver and all of its components are removed from your computer.

4 When the uninstallation is done, click **Finish** or **OK**.

Uninstalling Samsung SmarThru

NOTE: Before beginning uninstallation, ensure that all applications are closed on your computer. A system reboot is required after the software is uninstalled.

1 From the **Start** menu, select **Programs**.

2 Select **Samsung SmarThru**, and then select **SmarThru 3 Uninstall**.

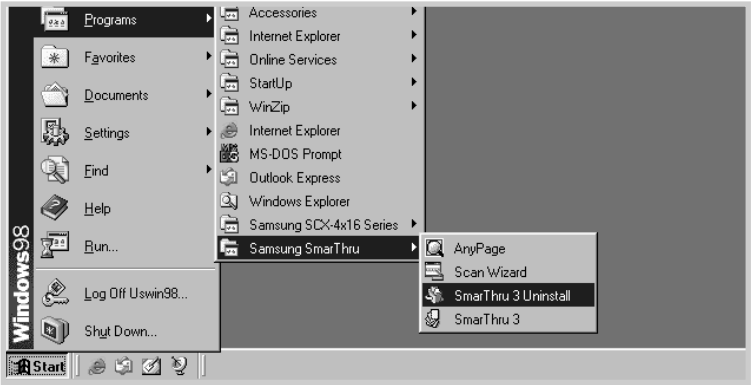

3 When your computer asks you to confirm your selection, click **Yes**. The Uninstall Options window appears.

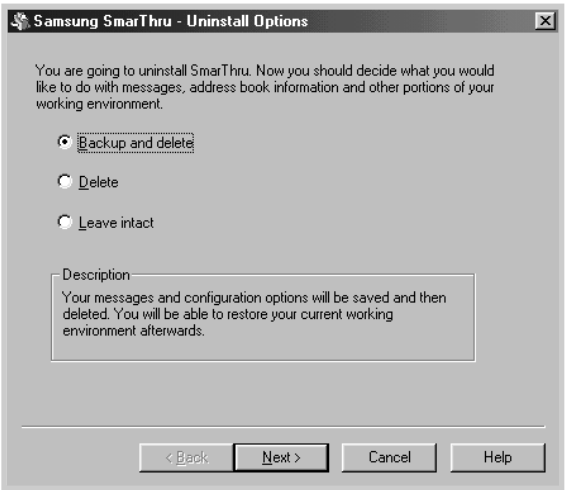

Uninstall options are:

- **Backup and delete:** Backs up all your data and options to a safe place. It then removes the SmarThru system including the data.
- **Delete:** Deletes all the SmarThru data and options. No backup or copying takes place. Be careful while using this option as you can easily lose your data.
- **Leave intact:** Uninstalls SmarThru software leaving data and options intact. This can be useful, if, for example, you decide to install the Stand Alone configuration over the SmarThru Networking. In this case, uninstall Samsung SmarThru having the **Leave intact** option set and install the SmarThru Stand Alone configuration.

4 After selecting the uninstall option, click **Next**.

5 When the uninstallation is done, the message window recommends restarting your computer. Click **OK**.

6 Click **Finish**.

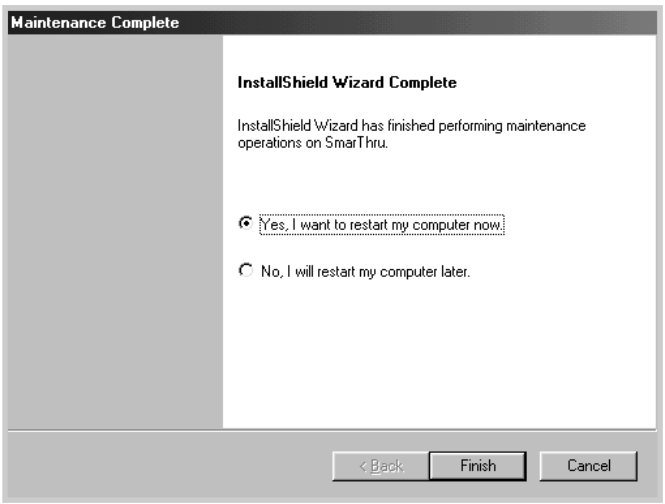

If your computer does not shut down and restart automatically, you must shut it down manually and restart it before the changes are saved.

Using the CD-ROM

You can uninstall all of the MFP driver, the Remote Control Panel and the SmarThru software with the CD-ROM you have used to install them.

1 Insert the supplied CD-ROM into your CD-ROM drive.

The CD-ROM should automatically run and an installation window appears.

If the installation window does not appear, select **Run** from the **Start** menu and then type **X:Autorun.exe**, replacing "**X**" with the letter of your drive and click **OK**.

2 If you are asked to select the language, choose the desired language.

3 Click **Uninstall the Samsung Software on your PC**.

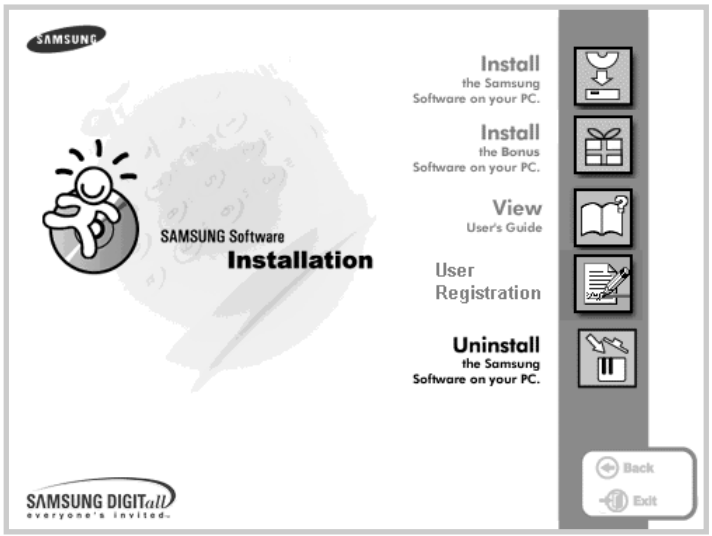

4 Follow the on-screen instructions to complete the uninstallation.

5 When the uninstallation is done, click **Finish**.

If your computer does not shut down and restart automatically, you must shut it down manually and restart it before the changes are saved.

3 PAPER HANDLING

This chapter introduces you to the basics of selecting print materials and loading them into your machine.

This chapter includes:

- **Selecting Print Materials**
- **Selecting an Output Location**
- **Loading Paper in the Paper Tray**
- **Using the Bypass Tray**

Selecting Print Materials

Always use print materials that meet the guidelines for use with this machine. Using print materials that are not recommended may cause paper jams or print quality problems.

Size, Input Sources and Capacities

Size (mm/in.)	Input Source/Capacity[1]	
	Paper Tray	Bypass Tray
Plain paper		
Letter (215.9 x 279/8.5 x 11)	YES/250	YES/1
A4 (210 x 297/8.27 x 11.69)	YES/250	YES/1
Folio (215.9 x 330.2/8.5 x 13)	YES/250	YES/1
Legal (215.9 x 355.6/8.5 x 14)	YES/250	YES/1
Executive (184.2 x 266.7/7.25 x 10.5)	YES/250	YES/1
A5 (148 x 210/5.83 x 8.27)	YES/250	YES/1
A6 (105 x 148/4.13 x 5.88)	YES/250	YES/1
Envelopes		
No.9 (98.4 x 225.4/3.88 x 8.88)	NO/0	YES/1
No.10 (104.8 x 241.3/4.13 x 9.5)	NO/0	YES/1
DL (110 x 220/4.33 x 8.66)	NO/0	YES/1
C5 (162 x 229/6.38 x 9.02)	NO/0	YES/1
C6 (114 x 162/4.49 x 6.38)	NO/0	YES/1
B5 (176 x 250/6.93 x 9.84)	NO/0	YES/1
No.7 3/4 (98.4 x 190.5/3.88 x 7.5)	NO/0	
Labels[2]		
Letter (215.9 x 279/8.5 x 11)	NO/0	YES/1
A4 (210 x 297/8.27 x 11.69)	NO/0	YES/1
Transparency films[2]		
Letter (215.9 x 279/8.5 x 11)	NO/0	YES/1
A4 (210 x 297/8.27 x 11.69)	NO/0	YES/1
Card stocks[2]		
A6 card (105 x 148/4.13 x 5.88)	NO/0	YES/1
Post Card (101.6 x 152.4/4 x 6)	NO/0	YES/1
Hagaki (100 x 148/3.94 x 5.83)	NO/0	YES/1

1. Maximum capacity may be reduced depending on paper thickness.
2. If you are experiencing excessive jamming, load one sheet at a time through the Bypass tray.

Guidelines for Paper and Special Materials

When selecting or loading paper, envelopes, or other special materials, keep these guidelines in mind:

- Attempting to print on damp, curled, wrinkled, or torn paper can cause paper jams and the poor print quality.
- Use only high quality copier grade paper. Avoid paper with embossed lettering, perforations, or texture that is too smooth or too rough. Paper jams may occur.
- Store paper in its ream wrapper until ready to use. Place cartons on pallets or shelves, not on the floor. Do not place heavy objects on top of the paper, whether it is packaged or unpackaged. Keep it away from moisture, or other conditions that can cause it to wrinkle or curl.
- During storage, you should use moisture-proof wrap, such as any plastic container or bag, to prevent dust and moisture from contaminating your paper.
- Always use paper and other materials that conform with the specifications listed under "Paper Specifications" on page B.6.
- Use only well-constructed envelopes with sharp, well creased folds.
  - DO NOT use envelopes with clasps and snaps.
  - DO NOT use envelopes with windows, coated lining, self-adhesive seals, or other synthetic materials.
  - DO NOT use damaged or poorly made envelopes.
- It is recommended that you load special paper types one sheet at a time.
- Only use materials specifically recommended for use in laser printers.
- To prevent special materials, such as transparencies and label sheets from sticking together, remove them as they prints out.
- Place transparencies on a flat surface after removing them from the machine.
- Do not leave transparencies in the paper tray for long periods of time. Dust and dirt may accumulate on them resulting in spotty printing.
- To avoid smudging caused by fingerprints, handle transparencies and coated paper carefully.
- To avoid fading, do not expose the printed transparencies to prolonged sunlight.
- Store unused materials at temperatures between 15 °C and 30 °C (59 °F to 86 °F). The relative humidity should be between 10 % and 70 %.

- Verify that your labels' adhesive material can tolerate fusing temperature of 200 °C (392° F) for 0.1 second.
- Make sure that there is no exposed adhesive material between labels. Exposed areas can cause labels to peel off during printing, which can cause paper jams. Exposed adhesive can also cause damage to machine components.
- Do not load a sheet of labels through the machine more than once. The adhesive backing is designed for one pass through the machine.
- Do not use labels that are separating from the backing sheet or are wrinkled, bubbled, or otherwise damaged.

Selecting an Output Location

The machine has two output locations; the rear output slot (face up) and the front output tray (face down).

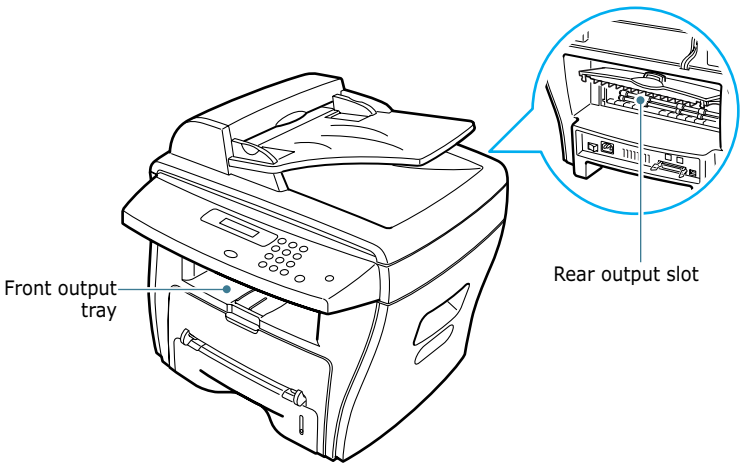

To use the front output tray, make sure that the rear cover is closed. To use the rear output slot, open the cover.

NOTES:

- If paper coming out of the front output tray has problems, such as excessive curl, try printing to the rear output slot.
- To avoid paper jams, do not open or close the rear cover while the machine is printing.

Printing to the Front Output Tray *(Face down)*

The front output tray collects printed paper face-down, in correct order. The tray should be used for most print jobs.

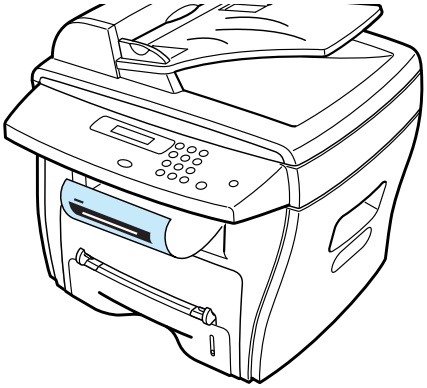

Printing to the Rear Output Slot *(Face up)*

Using the rear output slot, paper comes out of the machine face-up.

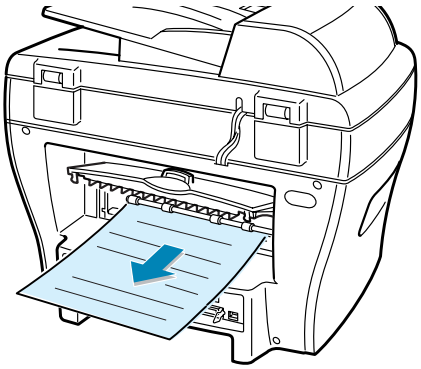

Printing from the Bypass tray to the rear output slot provides the **straight paper path**. Using the rear output slot might improve the output quality with the following:

- envelopes
- labels
- small custom-sized paper
- postcards
- transparencies

To use the rear output slot:

1 Open the rear cover by pulling it upward.

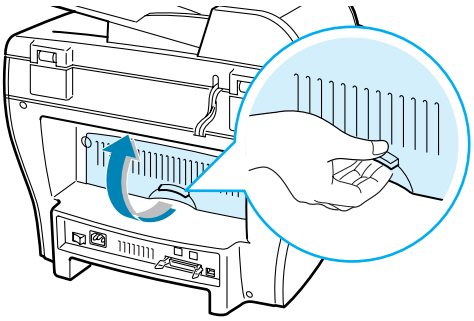

CAUTION: The fusing area at the rear part of the inside of your machine is hot when powered. Be careful not to be burned when you access this area.

2 If you do not want to stack the printed pages on the rear output slot, close the rear cover. The pages will stack on the front output tray.

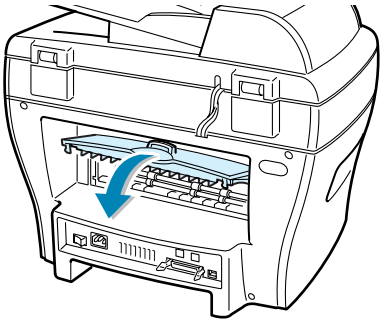

Loading Paper in the Paper Tray

The paper tray can hold a maximum of 250 sheets of 20 lb plain paper. For copying or faxing, you can use A4-, Letter- or Legal-sized paper only. For PC-printing, you can use many different sizes of paper; see page 3.2.

The paper level indicator on the front of the paper tray shows the amount of paper currently left in the tray. When the tray is empty, the indicator of the bar is lowered.

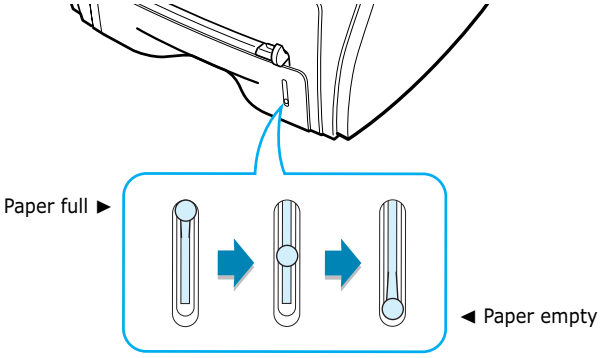

To load paper, pull open the paper tray and load paper with the print side face down.

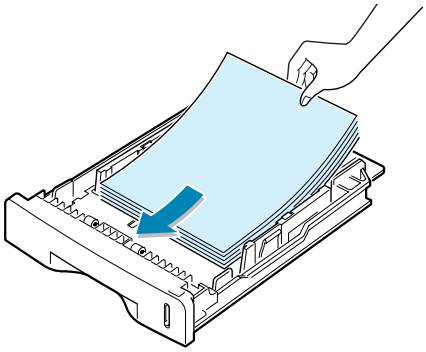

You can load letterhead paper with the design side face down. The top edge of the sheet with the logo should be placed at the front side of the tray.

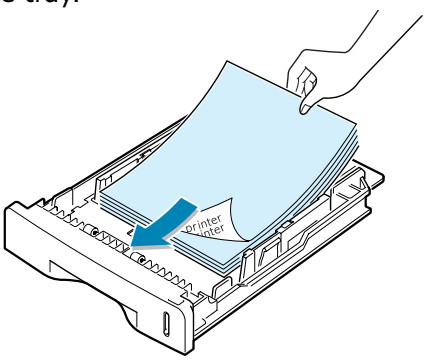

For details about loading paper in the paper tray, see “Loading Paper” on page 1.12.

NOTES:

- If you experience problems with paper feed, place the paper in the Bypass tray.
- You can load up to 150 sheets of previously printed paper. The printed side should be facing up with an uncurled edge at the top side. If you experience problems with paper feed, turn the paper around. Note that the print quality is not guaranteed.

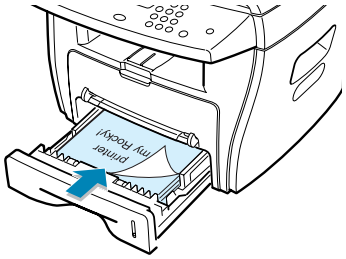

Using the Bypass Tray

Use the Bypass tray to print transparencies, labels, envelopes or postcards in addition to making quick runs of paper types or sizes that are not currently loaded in the paper tray.

Acceptable print materials are plain paper with sizes ranging from 100 x 148 mm (3.9 x 5.8 in.) to Legal, 216 x 356 mm (8.5 x 14 in.), the largest size acceptable, and weighing between 16 lb and 32 lb.

NOTES:

- Always load only the print materials specified in the Specifications on page B.6 to avoid paper jams and print quality problems.
- Flatten any curl on postcards, envelopes and labels before loading them into the Bypass tray.

1 Load a sheet of the print material with the print side face up and into the center of the tray.

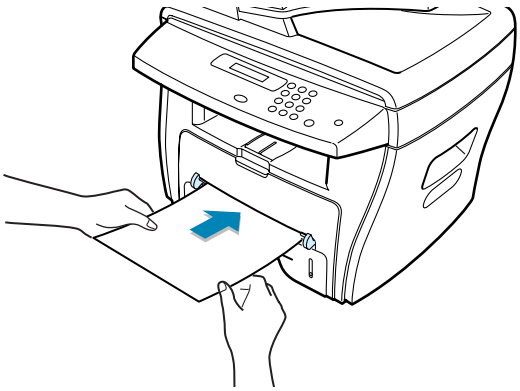

For transparencies, hold the transparencies by the edges and avoid touching the print side. Oils from your fingers that are deposited on the transparency can cause print quality problems.

For envelopes, load a sheet with the flap side face down and with the stamp area on the top left side.

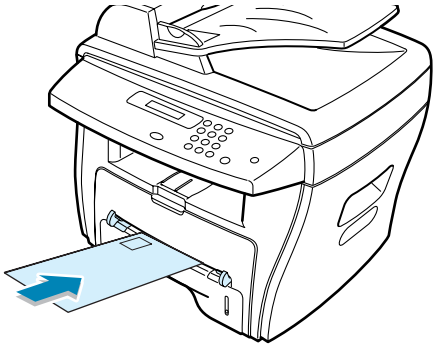

2 Adjust the paper guide to the width of the print material.

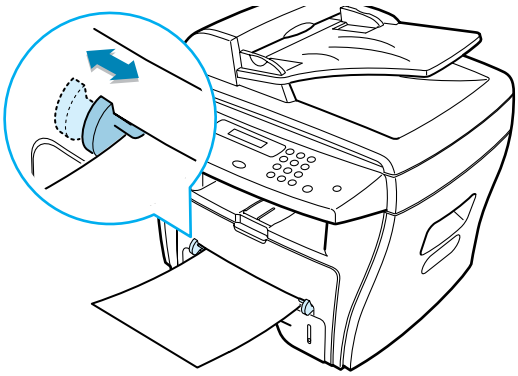

The machine picks up the material from the tray and begins printing.

NOTE: When printing on previously printed paper from the Bypass tray, the printed side should be facing down with an uncurled edge to the machine. If you experience problems with paper feed, turn the paper around.

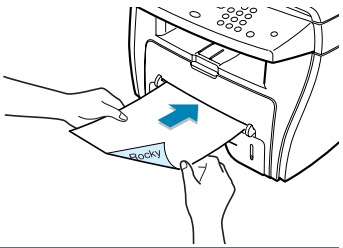

3 Open the rear cover to use the rear output slot.

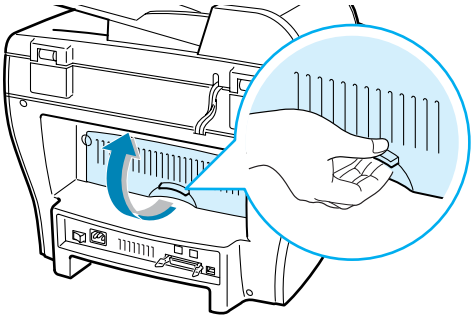

4 After printing, close the rear cover.

Setting the Paper Type and Size for the Bypass Tray

After loading paper in the Bypass tray, you need to set the correct paper type and size using the control panel buttons. These settings will apply to copy mode. For PC-printing, you need to select the paper size in the application program you use.

To set the paper size for the Bypass tray:

1 Press **Menu.**

The display shows "Paper Setting" on the top line and the first item, "Paper Type," on the bottom line.

2 Press **Enter** to access the menu item.

3 Use the scroll button (◄ or ►) to find the paper type you are using and press **Enter** to save it.

The display shows the next menu item, "Paper Size," on the bottom line.

4 Press **Enter** to access the menu item.

5 Use the scroll button (◄ or ►) to display "Bypass Paper" on the bottom line. Press **Enter** to access the menu item.

6 Use the scroll button (◄ or ►) to find the paper size you are using and press **Enter** to save it.

7 To return to the standby mode, press **Stop/Clear**.

4 COPYING

This chapter gives you step-by-step instructions for copying documents.

This chapter includes:

- **Loading Paper for Copying**
- **Making Copies on the Document Glass**
- **Making Copies from the Automatic Document Feeder (For SCX-4116/4216F)**
- **Setting Copy Options**
- **Using Special Copy Features**
- **Changing the Default Settings**
- **Setting the Time Out Option**

Loading Paper for Copying

You can copy a document to A4-, Letter- or Legal-sized paper.

The instructions for loading print materials are the same whether you are printing, faxing or copying. For further details, see page 1.12 for loading in the paper tray and page 3.8 for loading in the Bypass tray.

Making Copies on the Document Glass

1 Lift and open the document cover.

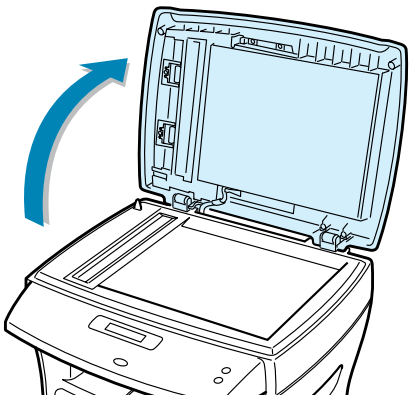

2 Place the document **face down** on the document glass and align it with the registration guide on the top left corner of the glass.

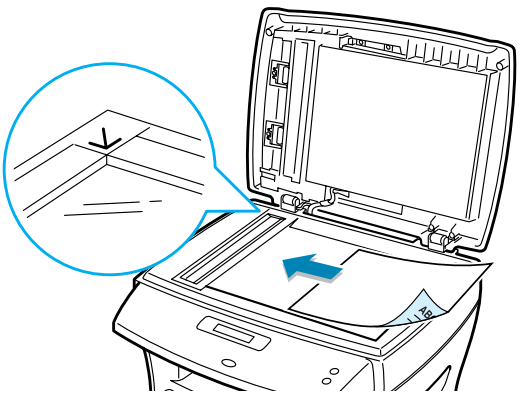

NOTE: For SCX-4116/4216F, make sure that no other documents are in the ADF (Automatic Document Feeder). If a document is detected in the ADF, it has priority over the document on the document glass.

3 Close the document cover.

NOTES:

- Leaving the cover open while copying may affect the copy quality and toner consumption.
- If you are copying a page from a book or magazine, lift the cover until its hinges are caught by the stopper and then close the cover. If the book or magazine is thicker than 30 mm, start copying with the cover open.

4 Customize the copy settings including number of copies, copy size, the contrast and the image type by using the control panel buttons. See "Setting Copy Options" on page 4.5.

To clear the settings, use the **Stop/Clear** button.

5 If necessary, you can use special copy features, such as Auto Fit, Clone and 2-side copying.

6 Press **Start Copy** or **Start Copy/Fax** to begin copying. The display shows the copy processing.

NOTES:

- You can cancel the copy job during an operation. Press **Stop/Clear**, and the copying will stop.
- Dust on the document glass may cause black spots on the printout. Keep it always clean.

Making Copies from the Automatic Document Feeder *(For SCX-4116/4216F)*

Using the ADF (Automatic Document Feeder), you can load up to 30 documents (75 g/m^2, 20lb) in one job.

When you use the ADF:

- Do not load documents smaller than 142 x 148 mm or larger than 216 x 356 mm.
- Do not attempt to feed the following types of documents:
  - carbon-paper or carbon-backed paper
  - coated paper
  - onion skin or thin paper
  - wrinkled or creased paper
  - curled or rolled paper
  - torn paper
- Remove all staples and paper clips before loading documents.
- Make sure any glue, ink or correction fluid on the paper is completely dry before loading documents.
- Do not load documents containing different sizes or weights of paper.

If you want to make copies from booklet, pamphlet, transparencies or documents having other unusual characteristics, use the document glass to load the document; see page 4.2.

1 Load the documents up to 30 pages **face up** into the ADF and adjust the document guides to the document size.

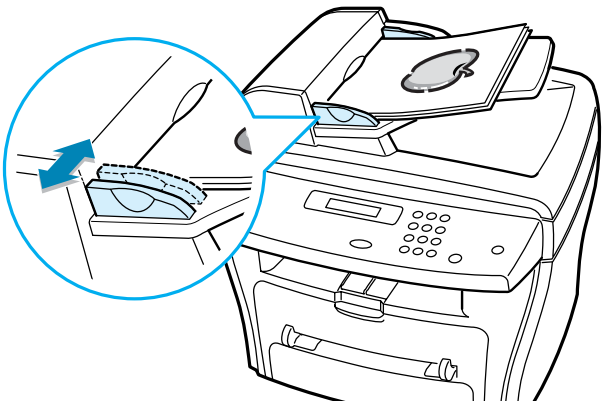

2 Make sure that the bottom of the document stack matches the paper size marked on the document tray.

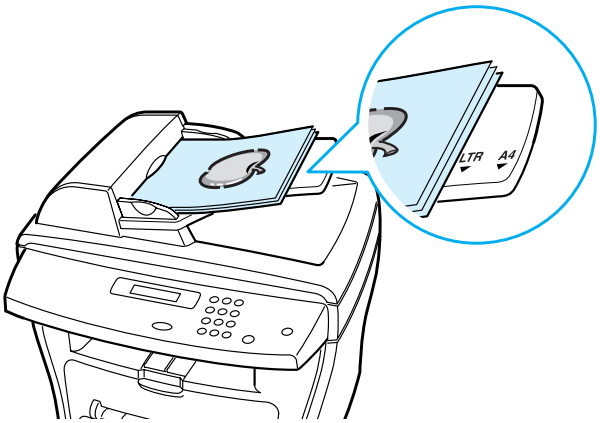

3 Customize the copy settings including number of copies, copy size, contrast and image type by using the control panel buttons. See "Setting Copy Options" on page 4.5.

To clear the settings, use the **Stop/Clear** button.

4 If necessary, you can use special copy features, such as Collation and 2 or 4 up-copying.

5 Press **Start Copy** or **Start Copy/Fax** to begin copying. The display shows the copy processing.

NOTE: Dust on the ADF glass may cause black lines on the printout. Keep it always clean.

Setting Copy Options

The buttons on the control panel let you make all the basic copy options; contrast, image type, copy size and number of copies. Set the following options for the current copy job before pressing **Start Copy** or **Start Copy/Fax** to make copies.

NOTE: If you press **Stop/Clear** while you set the copy options, all of the options you have set for the current copy job will be canceled and return to their default status. Or, they will automatically return to their default status after copying.

Contrast

If you have an original document containing faint markings and dark images, you can adjust the brightness to make a copy that is easier to read.

To adjust the contrast, press **Contrast**.

Each time you press the button, the LED labeled with the selected mode turns on.

You can choose from the following contrast modes:

- **Lighten**: works well with dark print.
- **Normal**: works well with standard typed or printed documents.
- **Darken**: works well with light print or faint pencil markings.

Image

The Image setting is used to improve the copy quality by selecting the document for the current copy job.

To select the image type, press **Image**.

Each time you press the button, the LED labeled with the selected mode turns on.

You can choose from the following image modes:

- **Text:** Use for documents containing mostly text.
- **Mixed:** Use for documents with mixed text and graphics.
- **Photo:** Use when the originals are photographs.

NOTE: When you copy a document containing color on the background, such as a newspaper or a catalog, from the document glass using the Mixed mode, the machine will automatically remove the background color. If you want to include the background color in your copy, load the document about 5 mm away from the guideline on the document glass or change the Contrast setting.

Reduced/Enlarged Copy

Using the **Reduce/Enlarge** button, you can reduce or enlarge the size of a copied image, from 25% to 400% when you copy original documents from the document glass or from 25% to 100% from the ADF. Note that the zoom rate available is different depending on the document loading method.

To select from the predefined copy sizes:

1. Press **Reduce/Enlarge**.

   The default setting appears on the bottom line of the display.

2. Use **Reduce/Enlarge** or the scroll button (◄ or ►) to find the desired size setting.

3. Press **Enter** to save the selection.

To fine-tune the size of copies:

1. Press **Reduce/Enlarge.**

2. Press **Reduce/Enlarge** or the scroll button (◄ or ►) until "Custom:25-100%," or "Custom:25-400%" (for SCX-4116/4216F) displays on the bottom line.

3. Enter the desired size using the number keypad. The selected number appears on the display.

4. Press **Enter** to save the selection.

NOTE: When you make a reduced copy, black lines may appear at the bottom of your copy.

Number of Copies

Using the **No. of Copy** button, you can select the number of copies from 1 to 99.

1. Press **No. of Copy**.

2. Enter the number of copies using the number keypad. The selected number appears on the display.

3. Press **Enter** to save the selection.

Using Special Copy Features

You can use the following copy features using the **Special** button on the control panel:

- **Auto Fit**: Automatically reduces or enlarges the original image to fit on the paper currently loaded in the machine. See below.
- **Clone**: Prints multiple image copies from the original document on a single page. The number of images is automatically determined by the original image size. See page 4.9.
- **Collation**: Sorts the copy job. For example, if you make 2 copies of 3 page documents, one complete 3 page document will print followed by the second complete document. See page 4.10.
- **2-Side**: Prints 2-sided original document on one sheet of paper. See page 4.10.
- **2/4-Up**: Prints 2/4 original images reduced to fit onto one sheet of paper. See page 4.11.
- **Poster**: Prints an image onto 9 sheets of paper (3x3). You can paste the printed pages together to make one poster-size document. See page 4.12.

NOTE: Some features may not be available depending on where you loaded the document, on the document glass or in the Automatic Document Feeder (for SCX-4116/4216F).

Auto Fit Copying

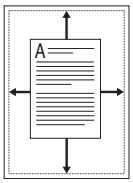

This special copy mode can be applied when you load document only using the document glass. For SCX-4116/4216F, if a document is detected in the ADF, the Auto Fit does not work.

1. Load the document to be copied on the document glass, and close the cover.
2. Press **Special Copy**. The display shows “Auto Fit” on the bottom line.
3. Press **Enter** to save the selection.

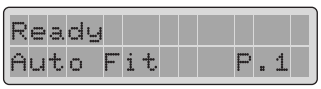

4 If necessary, customize the copy settings including number of copies, contrast and image type by using the control panel buttons. See “Setting Copy Options” on page 4.5.

NOTE: You cannot adjust the copy size using the **Reduce/ Enlarge** button while the Auto Fit copying is enabled.

5 Press **Start Copy** or **Start Copy/Fax** to begin copying.

Clone Copying

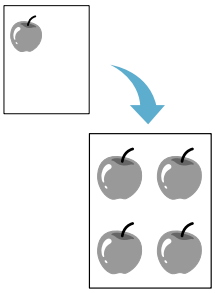

This special copy mode can be applied when you load document only using the document glass. For SCX-4116/4216F, if a document is detected on the ADF, the Clone copying feature does not work.

1 Load the document to be copied on the document glass, and close the cover.

2 Press **Special**. The display shows “Auto Fit” on the bottom line.

3 Press **Special** or the scroll button (◄ or ►) until “Clone” displays on the bottom line.

4 Press **Enter** to save the selection.

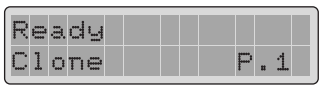

5 If necessary, customize the copy settings including number of copies, contrast and image type by using the control panel buttons. See “Setting Copy Options” on page 4.5.

NOTE: You cannot adjust the copy size using the **Reduce/ Enlarge** button while making a clone copy.

6 Press **Start Copy** or **Start Copy/Fax** to begin copying.

Collation Copying

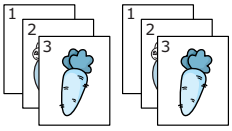

The Collation copying feature is available only when you load documents in the ADF.

1 Load the documents to be copied in the ADF.

2 Press **Special**. The display shows "Auto Fit" on the bottom line.

3 Press **Special** or the scroll button (◄ or ►) until "Collation" displays on the bottom line.

4 Press **Enter** to save the selection.

5 If necessary, customize the copy settings including number of copies, copy size, contrast and image type by using the control panel buttons. See "Setting Copy Options" on page 4.5.

6 Press **Start Copy** or **Start Copy/Fax** to begin copying.

2-side Copying

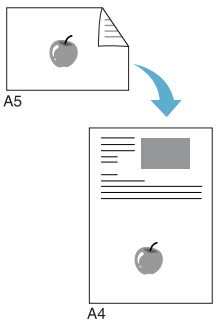

You can copy a 2-sided document on one page of A4, Letter or Legal-sized paper.

When you copy using this feature, the machine prints one side on the upper half of the paper and the other side on the lower half without reducing the original. This feature is helpful for copying a small-sized document, such as a name card.

If the original document is larger than the printable area, some portions may not be printed.

This special copy mode can be applied when you load document only using the document glass. For SCX-4116/4216F, if a document is detected in the ADF, the 2-side copying feature does not work.

1 Load the document to be copied on the document glass, and close the cover.

2 Press **Special**. The display shows "Auto Fit" on the bottom line.

3 Press **Special** or the scroll button (◄ or ►) until "2-Side" displays on the bottom line.

4 Press **Enter** to save the selection.

```
Ready
2-Side        P.1
```

5 If necessary, customize the copy settings including number of copies, contrast and image type by using the control panel buttons. See "Setting Copy Options" on page 4.5.

NOTE: You cannot adjust the copy size by using the **Reduce/ Enlarge** button for 2-side copying.

6 Press **Start Copy** or **Start Copy/Fax** to begin copying.

Your machine begins scanning the front side.

7 When "Set Backside" displays on the bottom line, open the document cover and flip the document over. Close the cover.

NOTE: If you press the **Stop** button or if no buttons are pressed for about 30 seconds, the machine cancels the copy job and returns to the standby mode.

8 Press **Start Copy** or **Start Copy/Fax** again.

2-up or 4-up Copying

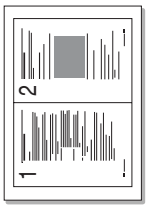

▲ 2-up copying

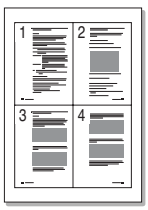

▲ 4-up copying

The 2 or 4-up copying feature is available only when you load documents in the ADF.

1 Load the documents to be copied in the ADF.

2 Press **Special**. The display shows "Auto Fit" on the bottom line.

3 Press **Special** or the scroll button (◄ or ►) until "2-Up" or "4-Up" displays on the bottom line.

4 Press **Enter** to save the selection.

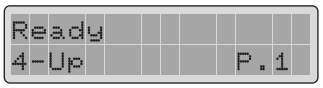

▲ When you select "4-Up"

5 If necessary, customize the copy settings including number of copies, contrast and image type by using the control panel buttons. See "Setting Copy Options" on page 4.5.

NOTE: You cannot adjust the copy size using the **Reduce/ Enlarge** button while making a 2 or 4-up copy.

6 Press **Start Copy** or **Start Copy/Fax** to begin copying.

NOTE: 2-up copy reduces your original document by 50 %. 4-up copy reduces the document by the following rates depending on the paper loaded: 76 % for Letter, 81 % for A4 and 95 % for Legal.

Poster Copying

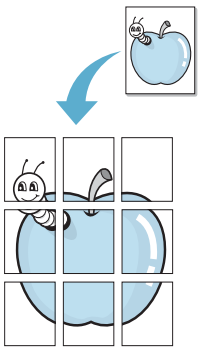

This special copy mode can be applied when you load document only using the document glass. For SCX-4116/4216F, if a document is detected in the ADF, the Poster copying feature does not work.

1 Load the documents to be copied on the document glass and close the cover.

2 Press **Special**. The display shows "Auto Fit" on the bottom line.

3 Press **Special** or the scroll button (◄ or ►) until "Poster" displays on the bottom line.

4 Press **Enter** to save the selection.

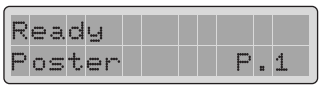

5 If necessary, customize the copy settings including number of copies, contrast and image type by using the control panel buttons. See "Setting Copy Options" on page 4.5.

NOTE: You cannot adjust the copy size using the **Reduce/ Enlarge** button while making a poster.

6 Press **Start Copy** or **Start Copy/Fax** to begin copying.

Your original document is divided into 9 portions. Each portion is scanned and printed one by one in the following order:

1	2	3
4	5	6
7	8	9

Changing the Default Settings

The copy options, including contrast, image quality, copy size and number of copies, can be set to the most frequently used modes. When you copy a document, the default settings are used unless they are changed by using the corresponding buttons on the control panel.

To create your own default settings:

1 Press **Menu** on the control panel until "Copy Setup" appears on the top line of the display.

The first menu item, "Change Default", appears on the bottom line.

2 Press **Enter** to access the menu item. The first setup option, "Contrast," appears on the bottom line.

3 Press the scroll button (◄ or ►) to scroll through the setup options.

4 When the desired option appears, press **Enter** to access the option.

5 Change the setting using the scroll button (◄ or ►) or enter the desired value using the number keypad.

6 Press **Enter** to save the selection.

7 Repeat steps 3 through 6, as needed.

8 To return to the standby mode, press **Stop/Clear**.

NOTES:

- While you set copy options, pressing **Stop/Clear** cancels the changed settings and restores their default status.
- If you use the **Copy Setup** option in the **Clear Memory** menu, your own default settings are reset to the factory default settings.

Setting the Time Out Option

You can set the time the machine waits before it restores the default copy settings, if you do not start copying after changing them on the control panel.

1 Press **Menu** on the control panel until "Copy Setup" appears on the top line of the display.

2 Press the scroll button (◄ or ►) to display "Timeout" on the bottom line.

3 Press **Enter** to access the menu item.

4 Press the scroll button (◄ or ►) until the desired status appears on the display.

You can select from 15, 30, 60 and 180 (seconds). Selecting "Off" means that the machine does not restore the default settings until you press **Start Copy** or **Start Copy/Fax** to begin copying, or **Stop/Clear** to cancel.

5 Press **Enter** to save the selection.

6 To return to the standby mode, press **Stop/Clear**.