Selecting the Paper Tray

After loading the print material for fax output, you have to select the paper tray you will use for the fax job.

1. Press **Menu** on the control panel.

   The first available menu, item "Paper Setting," appears on the top line of the display.

2. Press the scroll button (◀ or ▶) until "Fax Tray" appears on the bottom line of the display.

3. Press **Enter**.

4. Press the scroll button (◀ or ▶) until the paper tray you want appears on the display.

   You can select Tray1, Tray2, Tray1/2, or Auto. If you do not install the optional Tray 2, the Tray2 and Tray1/2 menu item will not appear on the display.

5. Press **Enter** to save the selection.

6. To return to Standby mode, press **Stop/Clear**.

7

Adjusting the Document Resolution

The default document settings produce good results when using typical text-based documents.

However, if you send documents that are of a poor quality, or contain photographs, you can adjust the resolution to produce a higher quality fax.

1. Press **Resolution** on the control panel.

2. By pressing **Resolution** or the scroll button (◀ or ▶), you can choose from Standard, Fine, Super Fine, Photo Fax, and Color Fax.

3 When the mode you want to use displays, press **Enter** to make your selection.

The document types recommended for the resolution settings are described in the table below:

Mode	Recommended for:
Standard	Documents with normal sized characters.
Fine	Documents containing small characters or thin lines or documents printed using a dot-matrix printer.
Super Fine	Documents containing extremely fine detail. Super Fine mode is enabled only if the machine with which you are communicating also supports the Super Fine resolution. See the notes below.
Photo Fax	Documents containing shades of gray or photographs.
Color Fax	Documents with colors. Sending a color fax is enabled only if the machine with which you are communicating supports color fax reception and you send the fax manually. In this mode, memory transmission is not available.

NOTES:

- For memory transmission, Super Fine mode is not available. The resolution setting is automatically changed to Fine.
- When your machine is set to Super Fine resolution and the fax machine with which you are communicating does not support Super Fine resolution, the machine transmits using the highest resolution mode supported by the other fax machine.

Sending a Fax Automatically

1. Load the document(s) face up into the ADF.

   OR

   Place a single document face down on the document glass.

   For details about loading a document, see page 7.6.

2. Adjust the document resolution to suit your fax needs (see page 7.9).

   If you need to change the darkness, see page 7.3.

3. Enter the remote fax phone number using the number keypad.

   You can use one-touch keypad, speed dial, or group dial numbers. For details about storing a number, see "Automatic Dialing" on page 7.19.

4. Press **Start**.

5. When a document is placed on the document glass, the display shows "Another Page?" on the top line after the document is scanned into the memory. If you have the next page, remove the scanned page and place the next page on the glass and select "1.Yes." Repeat as necessary.

   After all of the pages are scanned, select "2.No" when the display shows "Another Page?."

6. The number is dialed and then the machine begins sending the fax when the receiving fax machine is ready.

NOTE: When you want to cancel a fax job, press **Stop/Clear** at any time while sending.

Sending a Fax Manually

1. Load the document(s) face up into the ADF.

   OR

   Place a single document face down on the document glass.

   For details about loading a document, see page 7.6.

2. Adjust the document resolution to suit your fax needs (see page 7.9).

   If you need to change the darkness, see page 7.3.

3. Press **On Hook Dial**. You hear a dial tone.

4. Enter the receiving fax machine's number using the number keypad.

   You can use one-touch keypad, speed dial, or group dial numbers. For details about storing a number, see "Automatic Dialing" on page 7.19.

5. When you hear a high-pitched fax signal from the remote fax machine, press **Start**.

NOTE: When you want to cancel a fax job, press **Stop/Clear** at any time while sending.

Redialing the Last Number

To redial the number you last called:

Press **Redial/Pause**.

When a document is loaded in the ADF (Automatic Document Feeder; see page 7.6), the machine automatically begins to send.

For a document placed on the document glass, the display asks if you want to load another page. Select "1.Yes" to add. Otherwise, select "2.No."

Confirming Transmission

When the last page of your document has been sent successfully, the machine beeps and returns to Standby mode.

When something goes wrong while sending your fax, an error message appears on the display. For a list of error messages and their meanings, see page 9.12.

If you receive an error message, press **Stop/Clear** to clear the message and try to send the document again.

You can set your machine to print a confirmation report automatically each time sending a fax is completed. For further details, see the MSG Confirm item on page 7.4.

Automatic Redialing

When the number you have dialed is busy or there is no answer when you send a fax, the machine automatically redials the number every three minutes, up to seven times according to the factory default settings.

When the display shows "Retry Redial ?," press **Enter** to redial the number without waiting. To cancel the automatic redialing, press **Stop/Clear**.

To change the time interval between redials and the number of redial attempts. See page 7.3.

Receiving a Fax

About Receiving Modes

- In **Fax** mode, the machine answers an incoming fax call and immediately goes into the fax reception mode.
- In **Tel** mode, you can receive a fax by pressing **On Hook Dial** (you can hear a fax tone from the sending machine) and then pressing **Start** on the control panel of your machine. You can also pick up the handset of the extension phone and then press the remote receive code (see page 7.4).
- In **Ans/Fax** mode, the answering machine answers an incoming call, and the caller can leave a message on the answering machine. If the fax machine senses a fax tone on the line, the call automatically switches to Fax mode.
- In **DRPD** mode, you can receive a call using the Distinctive Ring Pattern Detection (DRPD) feature. "Distinctive Ring" is a telephone company service which enables a user to use a single telephone line to answer several different telephone numbers. For further details, see page 7.17.

When your machine's memory is full, the receiving mode automatically switches to Tel.

For details about changing the receiving mode, see page 7.3.

NOTES:
- To use the Ans/Fax mode, attach an answering machine to the EXT jack on the back of your machine.
- If you do not want other people to view your received documents, you can use Secure Receiving mode. In this mode, all of the received faxes are stored in memory. For further details, see page 7.35.

Loading Paper for Receiving Faxes

The instructions for loading paper in the paper tray are the same whether you are printing, faxing, or copying, except that faxes can only be printed on Letter-, A4-, or Legal-sized paper. For details about loading paper and setting the paper size in the tray, see page 2.7 and page 2.20.

Receiving Automatically in Fax Mode

Your machine is preset to Fax mode at the factory.

When you receive a fax, the machine answers the call on a specified number of rings and automatically receives the fax.

To change the number of rings, see page 7.3.

If you want to adjust the ringer volume, see "Setting Sounds (SCX-4720F Only)" on page 2.21.

Receiving Manually in Tel Mode

You can receive a fax call by picking up the handset of the extension phone and then pressing the remote receive code (see page 7.4), or press **On Hook Dial** (you can hear a fax tone from the sending machine) and then pressing **Start** on the control panel of your machine.

The machine begins receiving a fax and returns to Standby mode when the reception is completed.

Receiving Automatically in Ans/Fax Mode

To use this mode, you must attach an answering machine to the EXT jack on the back of your machine. See page 2.11.

If the caller leaves a message, the answering machine stores the message as it would normally. If your machine detects a fax tone on the line, it automatically starts to receive the fax.

NOTES:

- If you have set your machine to Ans/Fax mode and your answering machine is switched off, or no answering machine is connected to EXT jack, your machine automatically goes into Fax mode after a predefined number of rings.
- If your answering machine has a 'user-selectable ring counter', set the machine to answer incoming calls within 1 ring.
- If you are in Tel mode (manual reception) when the answering machine is connected to your machine, you must switch off the answering machine, or the outgoing message from the answering machine will interrupt your phone conversation.

Receiving Manually Using an Extension Telephone

This features works best when you are using an extension telephone connected to the EXT jack on the back of your machine. You can receive a fax from someone you are talking to on the extension telephone without going to the fax machine.

When you receive a call on the extension phone and hear fax tones, press the keys ***9*** on the extension telephone. The machine receives the document.

Press the buttons slowly in sequence. If you still hear the fax tone from the remote machine, try pressing ***9*** once again.

9 is the remote receive code preset at the factory. The first and the last asterisks are fixed, but you can change the middle number to whatever you wish. For details about changing the code, see page 7.4

Receiving Faxes Using the DRPD Mode

"Distinctive Ring" is a telephone company service which enables a user to use a single telephone line to answer several different telephone numbers. The particular number someone uses to call you is identified by different ringing patterns, which consist of various combinations of long and short ringing sounds. This feature is often used by answering services who answer telephones for many different clients and need to know which number someone is calling in on to properly answer the phone.

Using the Distinctive Ring Pattern Detection feature, your fax machine can "learn" the ring pattern you designate to be answered by the fax machine. Unless you change it, this ringing pattern will continue to be recognized and answered as a fax call, and all other ringing patterns will be forwarded to the extension telephone or answering machine plugged into the EXT jack. You can easily suspend or change Distinctive Ring Pattern Detection at any time.

Before using the Distinctive Ring Pattern Detection option, Distinctive Ring service must be installed on your telephone line by the telephone company. To set up Distinctive Ring Pattern Detection, you will need another telephone line at your location, or someone available to dial your fax number from outside.

To set up the DRPD mode:

1. Press **Menu** until "Fax Setup" appears on the top line of the display.

   The first available menu item, "Receive Mode," displays on the bottom line.

2. Press the scroll button (◀ or ▶) until you see "DRPD Mode" on the bottom line and press **Enter**.

3. When "Set" displays on the bottom line, press **Enter**.

   "Waiting Ring" appears on the display.

4. Call your fax number from another telephone. It is not necessary to place the call from a fax machine.

5 When your machine begins to ring, do not answer the call. The machine requires several rings to learn the pattern.

When the machine completes learning, the LCD displays "End DRPD Setup".

If the DRPD setup fails, "DRPD Ring Error" appears. Press **Enter** when "DRPD Mode" displays and retry from step 3.

6 To return to Standby mode, press **Stop/Clear**.

When the DRPD feature is set up, the DRPD option is available in the Receive Mode menu. To receive faxes in the DRPD mode, you need to set the menu to **DRPD**; see page 7.5.

NOTES:

- DRPD must be set up again if you re-assign your fax number, or connect the machine to another telephone line.
- After DRPD has been set up, call your fax number again to verify that the machine answers with a fax tone. Then have a call placed to a different number assigned to that same line to be sure the call is forwarded to the extension telephone or answering machine plugged into the EXT jack.

Receiving Faxes in the Memory

Since your machine is a multi-tasking device, it can receive faxes while you are making copies or printing. If you receive a fax while you are copying or printing, your machine stores incoming faxes in memory. Then, as soon as you finish copying or printing, the machine automatically prints the fax.

Automatic Dialing

One-touch Dialing

The 20 one-touch buttons on the control panel lets you store frequently-used fax numbers and dial a number automatically with the touch of a button.

Using the **Shift** button, you can store up to 40 fax numbers on the one-touch buttons.

Storing a Number for One-touch Dialing

1. Press and hold one of the one-touch dial buttons for about 2 seconds.

   If you want to use one-touch dial buttons from 21 to 40, press **Shift** and hold down the one-touch dial button for about 2 seconds.

   The display asks you to enter the fax number. "T" signifies that you are assigning a one-touch dial button.

   If a number is already stored in the location you chose, the display shows the number to allow you to change it. To start over with another one-touch button, press **Stop/ Clear**.

2. Enter the number you want to store using the number keypad and press **Enter**.

   To insert a pause between numbers, press **Redial/Pause**. The symbol "-" appears on the display.

   If you make a mistake while entering a number, press the ◀ button and re-enter the correct number.

3. To assign a name to the number, enter the name you want. For details about entering characters, see page 2.17.

   If you do not want to assign a name, skip this step.

4 Press **Enter** when the name appears correctly or without entering a name.

5 To store more numbers, press a one-touch button and repeat steps 2 through 4.

OR

To return to Standby mode, press **Stop/Clear**.

Sending a Fax using a One-touch Number

1 Load the document(s) face up into the ADF.

OR

Place a single document face down on the document glass.

For details about loading a document, see page 7.6.

2 Adjust the document resolution to suit your fax needs (see page 7.9).

If you need to change the darkness, see page 7.3.

3 Press the one-touch button where you stored a number.

The document scans into memory.

4 The machine dials the fax number stored in the one-touch dial location and the document is sent when the receiving fax machine answers.

Speed Dialing

You can store up to 200 frequently dialed numbers in one, two, or three-digit speed dial locations (0-199).

Storing a Number for Speed Dialing

1. Press **Phone Book** on the control panel.

2. Press **Phone Book** or the scroll button (◀ or ▶) to display "Store&Edit" on the bottom line of the display. Press **Enter**.

3. Press **Enter** when "Speed Dials" appears on the display.

   The display prompts you to enter a location number, showing the first available number.

4. Enter a speed dial number between 0 and 199, using the number keypad or the scroll button (◀ or ▶) and press **Enter**.

   If a number is already stored in the location you chose, the display shows the number to allow you to change it. To start over with another speed-dial number, press **Upper Level**.

5. Enter the number you want to store using the number keypad and press **Enter**.

   To insert a pause between numbers, press **Redial/Pause**. The symbol "-" appears on the display.

6. To assign a name to the number, enter the name you want. For details about entering characters, see page 2.17.

   OR

   If you do not want to assign a name, skip this step.

7. Press **Enter** when the name appears correctly or without entering a name.

8. To store more fax numbers, repeat steps 4 through 7.

   OR

   To return to Standby mode, press **Stop/Clear**.

Sending a Fax using a Speed Dial Number

1. Feed the document(s) face up into the ADF.

   Or

   Place a single document face down on the document glass.

   For details about loading a document, see page 7.6.

2. Adjust the document resolution to suit your fax needs (see page 7.9).

   If you need to change the darkness, see page 7.3.

3. Enter the speed dial number.
   - For a one-digit speed dial number, press and hold the appropriate digit button.
   - For a two or three-digit speed dial number, press the first digit button(s) and press and hold the last digit button.

4. The corresponding entry's name briefly displays.

5. The document scans into memory.

   When a document is placed on the document glass, the LCD display asks if you want to send another page. Select "1.Yes" to add more documents or "2.No" to begin sending the fax immediately.

6. The fax number stored in the speed dial location is automatically dialed. The document is sent when the receiving fax machine answers.

Group Dialing

If you frequently send the same document to several destinations, you can create a group of these destinations and set them under a group dial location. This enables you to use a group dial number setting to send the same document to all the destinations in the group.

Setting a Group Dial Number

1. Press **Phone Book** on the control panel.

2. Press **Phone Book** or the scroll button (◀ or ▶) to display "Store&Edit" on the bottom line of the display. Press **Enter**.

3. Press the scroll button (◀ or ▶) to display "Group Dials" on the bottom line and press **Enter**.

4. Press **Enter** when "New" displays on the bottom line.

   The display prompts you to enter a location number, showing the first available number.

5. Enter a group number between 0 and 199 using the number keypad or the scroll button (◀ or ▶) and press **Enter**.

6. Press a one-touch dial button or enter a speed dial number you want to include in the group and press **Enter**.

   You can also select the one-touch dial button or speed dial number stored in the machine by pressing the scroll button (◀ or ▶) and then press **Enter**.

7. When the display confirms the number to be added to the group, press **Enter**.

8. Repeat steps 6 and 7 to enter other one-touch dial or speed dial numbers into the group.

9. Press the **Upper Level** button when you have entered all of the desired numbers. The display prompts you to enter a group ID.

10 To assign a name to the group, enter the name you want. For details about entering characters, see page 2.17.

OR

If you do not want to assign a name, skip this step.

11 Press **Enter** when the name appears correctly or without entering a name.

12 If you want to assign another group, press **Enter** and repeat from step 5.

OR

To return to Standby mode, press **Stop/Clear**.

NOTE: You cannot include one group dial number in another group dial number.

Editing Group Dial Numbers

You can delete a specific speed dial number from a selected group or add a new number to the selected group.

1 Press **Phone Book** on the control panel.

2 Press **Phone Book** or the scroll button (◀ or ▶) to display "Store&Edit" on the bottom line of the display. Press **Enter**.

3 Press the scroll button (◀ or ▶) to display "Group Dials" on the bottom line and press **Enter**.

4 Press the scroll button (◀ or ▶) to display "Edit" on the bottom line and press **Enter**.

5 Enter the group number you want to edit or select the group number by pressing the scroll button (◀ or ▶) and press **Enter**.

6 Press a one-touch dial button or enter the speed dial number you want to add or delete.

You can also select the one-touch dial number or speed dial number you want to delete by pressing the scroll button (◀ or ▶).

7 Press **Enter**.

8 When you enter the specific number in the group, the display shows “Delete?.”

When you enter a new number, the display shows “Add?.”

9 Press **Enter** to add or delete the number.

10 To change the group name, press **Upper Level**.

11 Enter a new group name and press **Enter**.

12 If you want to edit another group, press **Enter** and repeat from step 5.

Or

To return to Standby mode, press **Stop/Clear**.

Sending a Fax Using Group Dialing (Multi-address Transmission)

You can use group dialing for Broadcast or Delayed transmissions.

Follow the procedure of the operation (Broadcast fax: see page 7.28, Delayed fax: see page 7.29, Priority fax: see page 7.31). When you come to a step in which the display asks you to enter the receiving fax number:

- For a one-digit group number, press and hold the appropriate digit button.
- For a two or three-digit group number, press the first digit button(s) and press and hold the last digit button.

You can use only one group number for one operation. Then continue the procedure to complete the desired operation.

Your machine automatically scans a document loaded in the Automatic Document Feeder or on the document glass into memory. The machine dials each of the numbers included in the group.

Searching for a Number in Memory

There are two ways to search for a number in the machine's memory. You can either scan from A to Z sequentially, or you can search using the first letter of the name associated with the number.

Searching Sequentially through the Memory

1. Press **Phone Book**.
2. Press **Enter** when "Search&Dial" appears on the display.
3. Press the scroll button (◀ or ▶) to scroll through the machine's memory until the name and number you want to dial display. You can search upwards or downwards through the entire memory in alphabetical order, from A to Z.

   While searching through the machine's memory, you can see that each entry is preceded by one of three letters; "T" for one-touch dial, "S" for speed dial or "G" for group dial numbers. These letters tell you how the number is stored.
4. When the name and/or the number you want displays, press **Start** or **Enter** to dial.

Searching with a Particular First Letter

1. Press **Phone Book**.
2. Press **Enter** when "Search&Dial" appears on the display.
3. Press the button labeled with the letter you want to search for. A name beginning with the letter displays.

   For example, if you want to find the name "MOBILE" press the **6** button, which is labeled with "MNO."
4. Press the scroll button (◀ or ▶) to display the next name.
5. When the name and/or the number you want displays, press **Start** or **Enter** to dial.

Printing a Phonebook List

You can check your automatic dial setting by printing a Phonebook list.

1. Press **Phone Book**.

2. Press **Phone Book** or the scroll button (◀ or ▶) until "Print" appears on the bottom line and press **Enter**.

   A list showing your one-touch dial, speed dial, and group dial entries prints out.

Other Ways to Fax

Sending Broadcast Faxes

Using the **Broadcasting** button on the control panel, you can use the broadcast fax feature, which allows you to send a document to multiple locations. Documents are automatically stored in memory and sent to a remote station. After transmission, the documents are automatically erased from memory.

1. Load the document(s) face up into the ADF.

   OR

   Place a single document face down on the document glass.

   For details about loading a document, see page 7.6.

2. Adjust the document resolution to suit your fax needs (see page 7.9).

   If you need to change the darkness, see page 7.3.

3. Press **Broadcasting** on the control panel.

4. Enter the number of the first receiving machine using the number keypad.

   You can use one-touch keypad, speed dial, or group dial numbers. For details, see "Automatic Dialing" on page 7.19.

5. Press **Enter** to confirm the number. The display asks you to enter another fax number to send the document.

NOTE: The Another No. prompt does not appear if you have added numbers for another broadcast or delay fax job. You must wait until the job is completed.

6 To enter more fax numbers, press **1** to select "Yes" and repeat steps 4 and 5. You can add up to 10 destinations.

Note that you cannot use more than one group dial number in any one broadcast.

7 When you finish entering fax numbers, press **2** to select "No" at the Another No. prompt.

The document is scanned into memory before transmission. The display shows memory capacity and the number of pages being stored in memory.

For a document placed on the document glass, the display asks if you want to load another page. Select "1.Yes" to add. Otherwise, select "2.No."

8 The machine begins sending the document to the numbers you entered in the order in which you entered them.

Sending a Delayed Fax

You can set your machine to send a fax at a later time when you will not be present.

1 Load the document(s) face up into the ADF.

OR

Place a single document face down on the document glass.

For details about loading a document, see page 7.6.

2 Adjust the document resolution to suit your fax needs (see page 7.9).

If you need to change the darkness, see page 7.3.

3 Press **Menu** until "Fax Feature" appears on the top line of the display. The first available menu item, "Delay Fax" displays on the bottom line.

4 Press **Enter**.

5 Enter the number of the receiving machine using the number keypad.

You can use one-touch keypad, speed dial, or group dial numbers. For details, see "Automatic Dialing" on page 7.19.

6 Press **Enter** to confirm the number on the display. The display asks you to enter another fax number to which to send the document.

NOTE: The Another No. prompt does not appear if you have added numbers for another broadcast or delay fax job. You must wait until the job is completed.

7 To enter more fax numbers, press **1** to select "Yes" and repeat steps 4 and 5. You can add up to 10 destinations.

Note that you cannot use more than one group dial number in any one broadcast.

8 When you finish entering fax numbers, press **2** to select "No" at the Another No. prompt.

The display asks you to enter a name.

9 To assign a name to the transmission, enter the name you want. For details about entering characters, see page 2.17.

If you do not want to assign a name, skip this step.

10 Press **Enter**. The display shows the current time and asks you to enter the starting time when the fax is to be sent.

11 Enter the time using the number keypad.

To select "AM" or "PM" for 12-hour format, press the * or # button or any number button.

If you set a time earlier than the current time, the document will be sent at that time on the following day.

12 Press **Enter** when the starting time displays correctly.

13 The document is scanned into memory before transmission. The display shows memory capacity and the number of pages being stored in memory.

For a document placed on the document glass, the display asks if you want to load another page. Select "1.Yes" to add. Otherwise, select "2.No."

14 The machine returns to Standby mode. The display reminds you that you are in Standby mode and that a delayed fax is set.

NOTE: If you want to cancel the delayed transmission, see "Canceling a Scheduled Fax" on page 7.34.

Sending a Priority Fax

Using the Priority Fax feature, a high priority document can be sent ahead of reserved operations. The document is scanned into memory and transmitted when the current operation is finished. In addition, priority transmission will interrupt a broadcast operation between stations (i.e., when the transmission to station A ends, before transmission to station B begins) or between redial attempts.

1 Load the document(s) face up into the ADF.

OR

Place a single document face down on the document glass.

For details about loading a document, see page 7.6.

2 Adjust the document resolution to suit your fax needs (see page 7.9).

If you need to change the darkness, see page 7.3.

3 Press **Menu** until "Fax Feature" appears on the top line of the display.

4 Press the scroll button (◀ or ▶) to display “Priority Fax” on the bottom line and press **Enter**.

5 Enter the number of the receiving machine using the number keypad.

To enter the number, you can use one-touch keypad, speed dial, or group dial numbers. For details, see “Automatic Dialing” on page 7.19.

6 Press **Enter** to confirm the number. The display asks you to enter a name.

7 To assign a name to the transmission, enter the name you want. For details about entering characters, see page 2.17.

If you do not want to assign a name, skip this step.

8 Press **Enter**.

The document is scanned into memory before transmission. The display shows memory capacity and the number of pages being stored in memory.

For a document placed on the document glass, the display asks if you want to load another page. Select “1.Yes” to add. Otherwise, select “2.No.”

9 The machine shows the number being dialed and begins sending the document.

Adding Documents To a Scheduled Fax

You can add documents to a delayed transmission previously reserved in your machine's memory.

1. Load the document(s) face up into the ADF.

   OR

   Place a single document face down on the document glass.

   For details about loading a document, see page 7.6.

2. Adjust the document resolution to suit your fax needs (see page 7.9).

   If you need to change the darkness, see page 7.3.

3. Press **Menu** until "Fax Feature" appears on the top line of the display.

4. Press the scroll button (◀ or ▶) to display "Add Page" on the bottom line and press **Enter**.

   The display shows the last job reserved in memory.

5. Press the scroll button (◀ or ▶) until you see the fax job to which you want to add documents and press **Enter**.

   The machine automatically stores the documents in memory, and the display shows memory capacity and the number of pages.

   For a document placed on the document glass, the display asks if you want to load another page. Select "1.Yes" to add. Otherwise, select "2.No."

6. After storing, the machine displays the numbers of total pages and added pages and then returns to Standby mode.

Canceling a Scheduled Fax

1. Press **Menu** until "Fax Feature" appears on the top line of the display.

2. Press the scroll button (◀ or ▶) to display "Cancel Job" on the bottom line and press **Enter**.

   The display shows the last job reserved in memory.

3. Press the scroll button (◀ or ▶) until you see the fax job you want to cancel, and press **Enter**.

4. When the display confirms your selection, press **1** to select "Yes." The selected job is canceled and the machine returns to Standby mode.

   To cancel your selection, press **2** to select "No."

Additional Features

Using Secure Receiving Mode

You may need to prevent your received faxes from being accessed by unauthorized people. You can turn on Secure Receiving mode to restrict printing of received faxes when the machine is unattended. In Secure Receiving mode, all incoming faxes go into memory. When the mode is deactivated, any stored faxes are printed.

To turn Secure Receiving mode on:

1. Press **Menu** until "Advanced Fax" appears on the top line of the display.
2. Press the scroll button (◀ or ▶) until "Secure Receive" appears on the bottom line and press **Enter**.
3. Press the scroll button (◀ or ▶) to display "On" on the bottom line and press **Enter**.
4. Enter a four-digit passcode you want to use, using the number keypad and press **Enter**.

NOTE: You can activate Secure Receiving mode without setting a passcode, but cannot protect your faxes.

5. Re-enter the passcode to confirm it and press **Enter**.
6. To return to Standby mode, press **Stop/Clear**.

When a fax is received in Secure Receiving mode, your machine stores it in memory and displays "Secure Receive" to let you know that there is a fax stored.

To print received documents:

1. Access the Secure Receive menu by following steps 1 and 2 on page 7.35.

2. Press the scroll button (◀ or ▶) to display "Print" on the bottom line and press **Enter**.

3. Enter the four-digit passcode and press **Enter**.

   The machine prints all of the faxes stored in memory.

To turn Secure Receiving mode off:

1. Access the Secure Receive menu by following steps 1 and 2 on page 7.35.

2. Press the scroll button (◀ or ▶) to display "Off" on the bottom line and press **Enter**.

3. Enter the four-digit passcode and press **Enter**.

   The mode is deactivated and the machine prints all faxes stored in memory.

4. To return to Standby mode, press **Stop/Clear**.

Printing Reports

Your machine can print reports containing useful information. The following reports are available:

Phonebook List

This list shows all of the numbers currently stored in the machine's memory as speed dial and group dial numbers.

You can print this Phonebook list using the **Phone Book** button: see page 7.27.

Sent Fax Report

This report shows information on the faxes you have recently sent.

Received Fax Report

This report shows information on the faxes you have recently received.

System Data List

This list shows the status of the user-selectable options. You may print this list to confirm your changes after changing any settings.

Scheduled Job Information

This list shows the document(s) currently stored for Delayed faxes or Toll Save faxes. The list shows the starting time(s) and type(s) of operation(s).

Message Confirmation

This report shows the fax number, the number of pages, the elapsed time of the job, the communication mode, and the communication results for a particular fax job.

You can set up your machine to automatically print a message confirmation report after each fax job. See page 7.4.

Junk Fax Number List

This list shows up to 10 fax numbers specified as junk fax numbers. To add or delete numbers to or from this list, access the Junk Fax Setup menu: see page 7.40. When the Junk Fax Barrier feature is turned on, incoming faxes from those numbers are blocked.

This feature recognize the last 6 digits of the fax number set as a remote fax machine's ID.

Multi-communication Report

This report is printed automatically after sending documents from more than one location.

Power Failure Report

This report is printed out automatically when power is restored after a power failure, if any data loss occurs due to the power failure.

NOTE: The lists you have set to print out automatically don't print out when there is no paper loaded or a paper jam has occurred.

Printing a Report

1. Press **Menu** until "Report" appears on the top line of the display. The first available menu item, "Phone Book," displays on the bottom line.

2. Press the scroll button (◀ or ▶) to display the report or list you want to print on the bottom line.
   - Phone Book: Phonebook list
   - Sent Report: Sent fax report
   - RCV Report: Received fax report
   - System Data: System data list
   - Scheduled Jobs: Scheduled job information
   - MSG Confirm: Message confirmation
   - Junk Fax List: Junk fax number list

3. Press **Enter**.

   The selected information prints out.

Using Advanced Fax Settings

Your machine has various user-selectable setting options for sending or receiving faxes. These options are preset at the factory, but you may need to change them. To find out how the options are currently set, print the System Data list. For details about printing the list, see above.

Changing Setting Options

1. Press **Menu** until "Advanced Fax" appears on the top line of the display. The first available menu item, "Send Forward," displays on the bottom line.

2. Press the scroll button (◀ or ▶) until you see the menu item you want on the bottom line and press **Enter**.

3. When the option you want appears on the display, choose a status by pressing the scroll button (◀ or ▶) or enter a value using the number keypad.

4 Press **Enter** to save the selection.

5 You can exit from Setup mode at any time by pressing **Stop/Clear**.

Advanced Fax Setting Options

Option	Description
Send Forward	You can set the machine to send a copy of all outgoing faxes to a specified destination, in addition to the fax numbers you entered. Select **Off** to turn this feature off. Select **On** to turn this feature on. You can set the number of the fax machine to which faxes are to be sent.
RCV Forward	You can set your machine to forward incoming faxes to another fax number during a specified time period. When a fax arrives at your machine, it is stored in memory. Then, the machine dials the fax number that you have specified and sends the fax. Select **Off** to turn this feature off. Select **On** to turn this feature on. You can set the fax number to which faxes are forwarded. Then, you can enter the starting time and date, and/or the ending time and date. The **Print Local Copy** option allows you to set the machine to print the fax on your machine, if fax forwarding is completed without any error.
Toll Save	You can set your machine to store your faxes in memory and send them at a specified toll-saving time. For details about Toll Save mode, see page 2.23. Select **Off** to turn this feature off. Select **On** to turn this feature on. You can set the starting time and date, and/or the ending time and date for Toll Save mode.

Option	Description
Junk Fax Setup	Using the Junk Fax Barrier feature, the system will not accept faxes sent from remote stations whose numbers are stored in the memory as junk fax numbers. This feature is useful for blocking any unwanted faxes. Select **Off** to turn the feature off. Your machine accepts all faxes. Select **On** to turn the feature on. You can set up to 10 fax numbers as junk fax numbers using the **Setup** option. After storing numbers, your machine will not accept faxes from the registered stations. To delete all junk fax numbers, use the **All Delete** option.
Secure Receive	You can keep your received faxes from being accessed by unauthorized people. For further details about setting this mode, see page 7.35.
Prefix Dial	You can set a prefix dial number of up to five digits. This number dials before any automatic dial number is started. It is useful for accessing a PABX exchange.
Stamp RCV Name	This option allows the machine to automatically print the page number, and the date and time of reception at the bottom of each page of a received document. Select **Off** to turn this feature off. Select **On** to turn this feature on.
ECM Mode (Error Correction Mode)	Error Correction Mode helps with poor line quality and makes sure any faxes you send are sent smoothly to any other ECM-equipped fax machine. If the line quality is poor, it takes more time to send a fax when you are using ECM. Select **Off** to turn this feature off. Select **On** to turn this feature on.

8 MAINTENANCE

This chapter provides information for maintaining your machine and the toner cartridge.

This chapter includes:

- **Clearing the Memory**
- **Cleaning Your Machine**
- **Maintaining the Toner Cartridge**
- **Consumables and Replacement Parts**
- **Replacing the ADF Rubber Pad**

Clearing the Memory

You can selectively clear information stored in your machine's memory.

CAUTION: Before clearing the memory, make sure that all fax jobs have been completed.

1. Press **Menu** on the control panel until "Maintenance" appears on the top line of the display.

2. Press the scroll button (◀ or ▶) until you see "Clear Settings" on the bottom line and press **Enter**.

   The first available menu item, "All Settings," displays on the bottom line.

3. Press the scroll button (◀ or ▶) until you see the item you want to clear.

   - All Settings: Clears all of the data stored in the memory and resets all of your settings to the factory default.
   - Paper Setting: Restores all of the Paper Setting options to the factory default.
   - Copy Setup: Restores all of the Copy Setup options to the factory default.
   - Fax Setup: (only for the SCX-4720F) Restores all of the Fax Setup options to the factory default.
   - Fax Feature: (only for the SCX-4720F) Cancels all of the scheduled fax jobs in the machine's memory.
   - Advanced Fax: (only for the SCX-4720F) Restores all of the Advanced Fax setting options to the factory default.
   - Sent Report: (only for the SCX-4720F) Clears all records of sent faxes.
   - RCV Report: (only for the SCX-4720F) Clears all records of received faxes.
   - Phone Book: (only for the SCX-4720F) Clears the one-touch, speed dial, and group dial numbers stored in the memory.

4. Press **Enter**. The selected memory is cleared and the display asks you to continue clearing the next item.

5. To clear another item, repeat steps 3 and 4.

   OR

   To return to Standby mode, press **Stop/Clear**.

Cleaning Your Machine

To maintain print quality, follow the cleaning procedures below each time the toner cartridge is replaced or if print quality problems occur.

CAUTIONS:

- Cleaning the cabinet of the machine with surfactants containing large amounts of alcohol, solvent, or other strong substances can discolor or crack the cabinet.
- While cleaning the inside of the machine, be careful not to touch the transfer roller, located underneath the toner cartridge. Oil from your fingers can cause print quality problems.

Cleaning the Outside

Clean the cabinet of the machine with a soft lint-free cloth. You can dampen the cloth slightly with water, but be careful not to let any water drip onto or into the machine.

Cleaning the Inside

During the printing process, paper, toner, and dust particles can accumulate inside the machine. This buildup can cause print quality problems, such as toner specks or smearing. Cleaning the inside of the machine clears or reduces these problems.

1. Turn the machine off and unplug the power cord. Wait for the machine to cool down.

2. Open the front door and pull the toner cartridge out, lightly pushing it down. Set it on a clean flat surface.

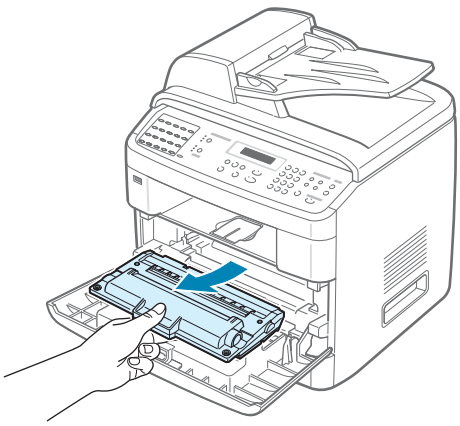

CAUTIONS:

- To prevent damage to the toner cartridge, do not expose it to light for more than a few minutes. Cover it with a piece of paper, if necessary.
- Do not touch the green underside of the toner cartridge. Use the handle on the cartridge to avoid touching this area.

3 With a dry lint-free cloth, wipe away any dust and spilled toner from the toner cartridge area and the toner cartridge cavity.

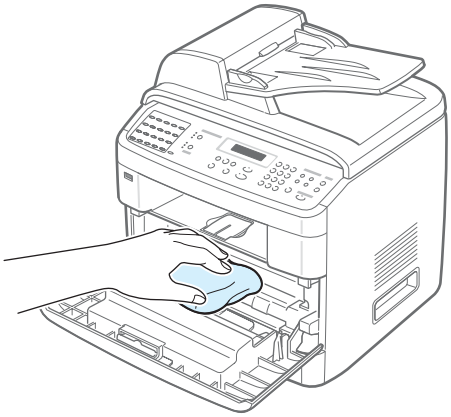

CAUTION: Do not touch the black transfer roller inside the machine.

4 Locate the long strip of glass (LSU) inside the top of the cartridge compartment, and gently swab the glass to see if dirt turns the white cotton black.

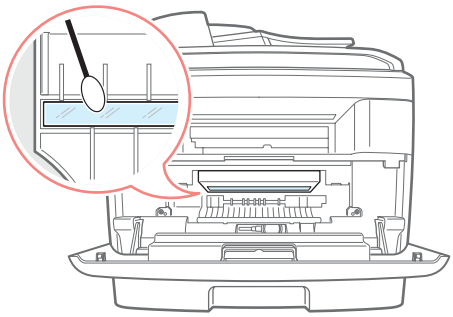

5 Reinsert the toner cartridge and close the door.

6 Plug in the power cord and turn the machine on.

Cleaning the Scan Unit

Keeping the scan unit clean helps ensure the best possible copies. We suggest that you clean the scan unit at the start of each day and during the day, as needed.

1. Slightly dampen a soft lint-free cloth or paper towel with water.

2. Open the document cover.

3. Wipe the surface of the document glass and ADF glass until it is clean and dry.

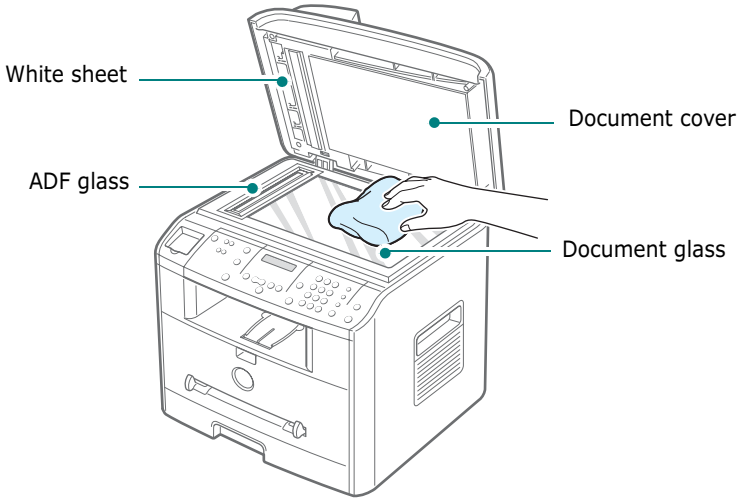

4. Wipe the underside of the white document cover and white sheet until it is clean and dry.

5. Close the document cover.

Maintaining the Toner Cartridge

Toner cartridge storage

To get the most from the toner cartridge, keep the following guidelines in mind:

- Do not remove the toner cartridge from its package until ready for use.
- Do not refill the toner cartridge. **The machine warranty does not cover damage caused by using a refilled cartridge.**
- Store toner cartridges in the same environment as your machine.
- To prevent damage to the toner cartridge, do not expose it to light for more than a few minutes.

Saving toner

To save toner, press the **Toner Save** button on the control panel; see page 2.23. The button backlight turns on. Using this feature extends the life of the toner cartridge and reduces your cost per page, but it also reduces print quality.

Expected Cartridge Life

The life of the toner cartridge depends on the amount of toner that print jobs require. When printing text at ISO 5% coverage, a new toner cartridge lasts an average of 5,000 pages. (The original toner cartridge supplied with the machine lasts an average of 3,000 pages.) The actual number may be different depending on the print density of the page you print. If you print a lot of graphics, you may need to change the cartridge more often.

Redistributing Toner

When the toner cartridge is near the end of its life, white streaks or light print occurs. The LCD displays the warning message, "Toner Low." You can temporarily reestablish the print quality by redistributing the remaining toner in the cartridge.

NOTE: Your machine can print received faxes when the toner is nearly empty. For details, see page 8.11.

1 Open the front door.

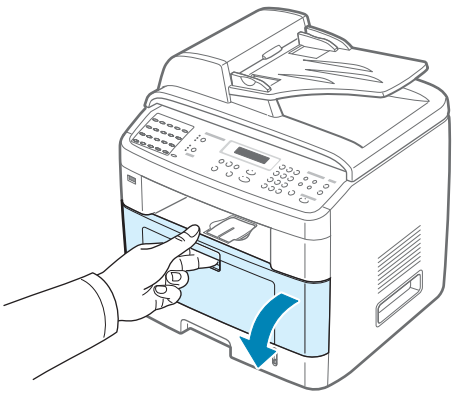

2 Pull the toner cartridge out and gently roll the cartridge 5 or 6 times to distribute the toner evenly inside the cartridge.

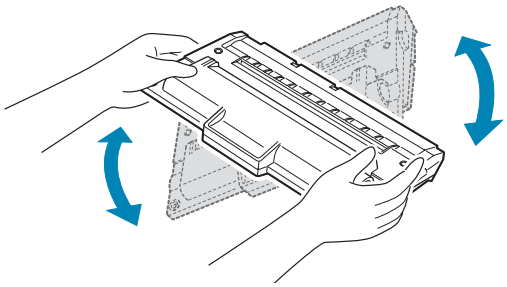

NOTE: If toner gets on your clothing, wipe it off with a dry cloth and wash clothing in cold water. Hot water sets toner into fabric.

CAUTION: Do not touch the green underside of the toner cartridge. Use the handle on the cartridge to avoid touching this area.

3 Reinstall the cartridge and close the front door.

Replacing the Toner Cartridge

When the display on the control panel shows the warning message, “Toner Empty Replace Toner,” the machine stops printing. At this stage, the toner cartridges needs to be replaced.

1 Open the front door.

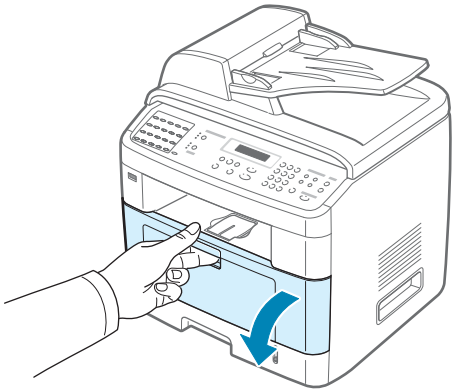

2 Lightly pushing the used cartridge down, pull it out.

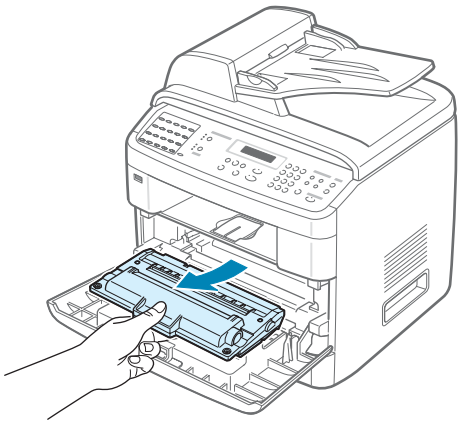

3 Unpack the new toner cartridge and gently roll it horizontally 5 or 6 times to distribute the toner evenly inside the cartridge.

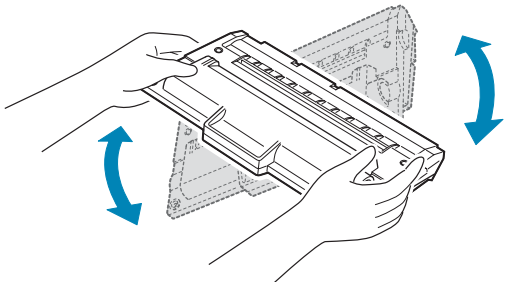

Save the box and the plastic bag for shipping.

NOTE: If toner gets on your clothing, wipe it off with a dry cloth and wash clothing in cold water. Hot water sets toner into fabric.

CAUTION: Do not touch the green underside of the toner cartridge. Use the handle on the cartridge to avoid touching this area.

4 Hold the toner cartridge by the handle. Slowly insert the cartridge into the opening in the machine. Tabs on the sides of the cartridge and corresponding grooves within the machine will guide the cartridge into the correct position until it locks into place completely.

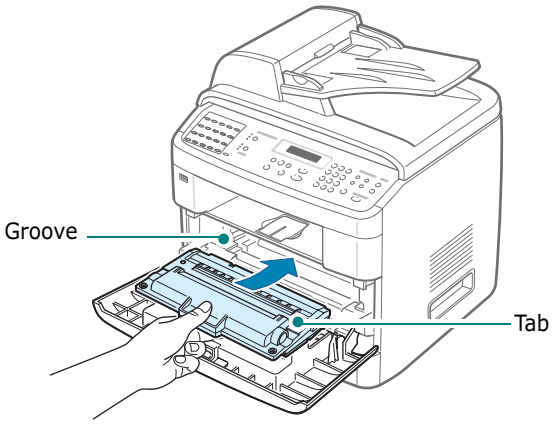

5 Close the front door.

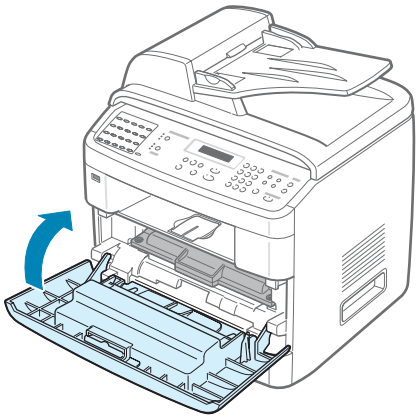

Setting the Notify Toner Option *(SCX-4720F Only)*

If you set the Notify Toner menu option to “On,” your machine automatically sends a fax to your service company or the dealer to notify them that your machine requires a new toner cartridge when the toner cartridge needs to be replaced. The fax number is preset by your dealer when you bought your machine.

1 Press **Menu** on the control panel until “Maintenance” appears on the top line of the display.

The first available menu item, “Clean Drum,” displays on the bottom line.

2 Press the scroll button (◀ or ▶) to display “Notify Toner ” on the bottom line and press **Enter**.

3 Press the scroll button (◀ or ▶) to change the setting.

Select “On” to enable this feature. Selecting “Off” disables this feature.

4 Press **Enter** to save the selection.

Cleaning the Drum

If there are streaks or spots on your print, the OPC drum of the cartridge may require cleaning.

1. Before starting the cleaning procedure, make sure that paper is loaded in the machine.

2. Press **Menu** on the control panel until "Maintenance" appears on the top line of the display.

   The first available menu item, "Clean Drum," displays on the bottom line.

3. Press **Enter**.

4. When the display asks you to confirm your selection, press **Enter**.

   The machine prints out a cleaning page. Toner particles on the drum surface are affixed to the paper.

5. If the problem remains, repeat steps 1 through 4.

Printing When Toner is Low

When the toner cartridge is nearly empty, your machine saves incoming faxes in memory without printing them. If you want to print a fax when toner is low, you can set your machine to continue printing even though print quality is not as good.

1. Press **Menu** until "Machine Setup" appears on the display.

2. Press the scroll button (◀ or ▶) until "Ignore Toner" appears on the bottom line and press **Enter**.

3. Press the Scroll button (◀ or ▶) to select "On" or "Off".

   Select "On" to continue printing incoming faxes in low toner status.

   Select "Off" to stop printing when the toner cartridge is nearly empty. This is the default setting.

4. Press **Enter** to save the selection.

Consumables and Replacement Parts

From time to time, you needs to replace the toner cartridge, roller, and fuser unit to maintain top performance and to avoid print quality problems and paper feed problems resulting from worn parts.

The following items should be replaced after you have printed the specified number of pages:

Items	Yield (Average)
ADF rubber pad	Approx. 20,000 pages
ADF roller	Approx. 60,000 pages
Paper feeding roller	Approx. 60,000 pages
Transfer roller	Approx. 60,000 pages
Fuser unit	Approx. 60,000 pages

To purchase consumables and replacement parts, contact your Samsung dealer or the retailer where you bought your machine. We strongly recommend that these items be installed by a trained service professional, except for the toner cartridge (see page 8.8) and the ADF rubber pad (see page 8.13).

Replacing the ADF Rubber Pad

You can purchase an ADF rubber pad from your Samsung dealer or the retailer where you bought your machine.

1 Open the ADF cover.

2 Rotate the bushing on the right end of the ADF roller toward the ADF(①) and remove the roller from the slot(②).

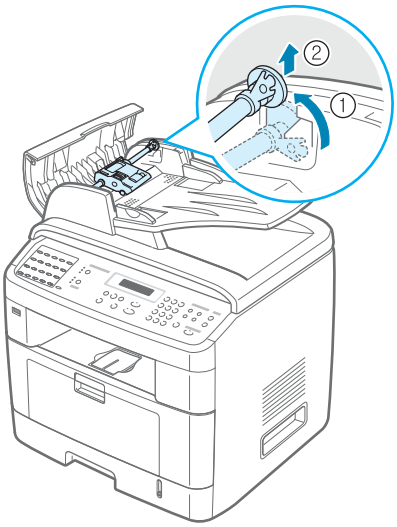

8

3 Remove the ADF rubber pad from the ADF, as shown.

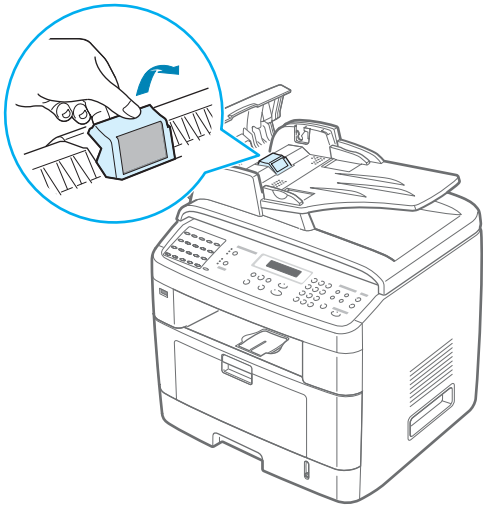

4 Insert a new ADF rubber pad into place.

5 Align the left end of the ADF roller with the slot and push the right end of the ADF roller into the right slot (①). Rotate the bushing on the right end of the roller toward the document input tray (②).

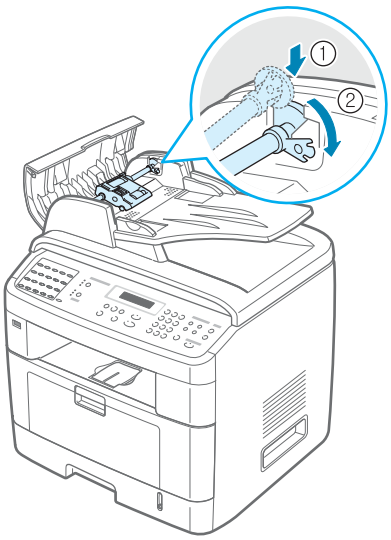

6 Close the ADF cover.

9 TROUBLESHOOTING

This chapter gives helpful information for what to do if you encounter an error.

This chapter includes:

- **Clearing Document Jams**
- **Clearing Paper Jams**
- **Clearing LCD Error Messages**
- **Solving Other Problems**

Clearing Document Jams

When a document jams while passing through the ADF (Automatic Document Feeder), "Document Jam" appears on the display.

Input Misfeed

1 Remove any remaining page(s) from the ADF.

2 Open the ADF cover.

3 Rotate the bushing on the right end of the ADF roller toward the ADF (①) and remove the roller from the slot (②). Pull the document gently to the left and out of the ADF.

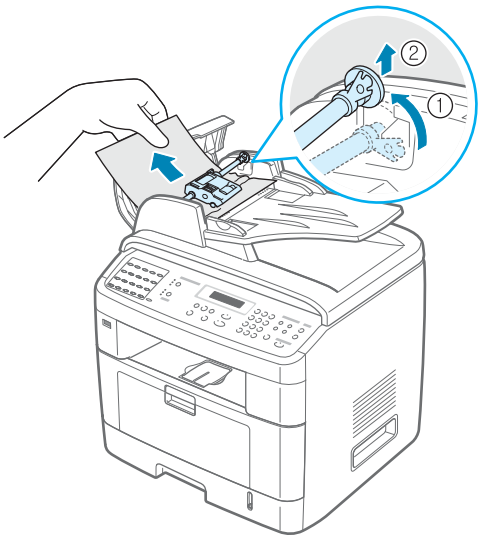

4 Align the left end of the ADF roller with the slot and push the right end of the ADF roller into the right slot (①). Rotate the bushing on the right end of the roller toward the document input tray (②).

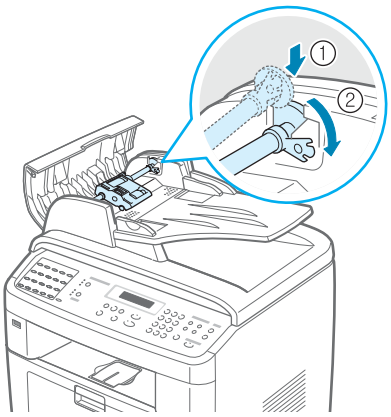

5 Close the ADF cover. Then load the removed page(s), if any, back into the ADF.

NOTE: To prevent document jams, use the document glass for thick, thin, or mixed paper-type documents.

Exit Misfeed

1 Remove any remaining page(s) from the ADF.

2 Open the document cover and turn the release knob to remove the misfed documents from the document output tray.

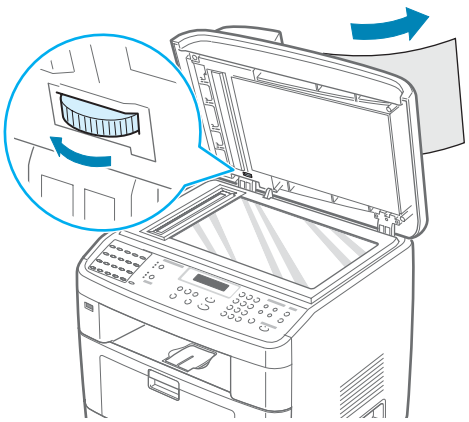

3 Close the document cover. Then load the removed page(s), if any, back into the ADF.

Roller Misfeed

1. Remove any remaining page(s) from the ADF.
2. Open the document cover.
3. Turn the release knob so that you can easily seize the misfed page, and remove the page from the roller or the feed area by carefully pulling it to the right using both hands.

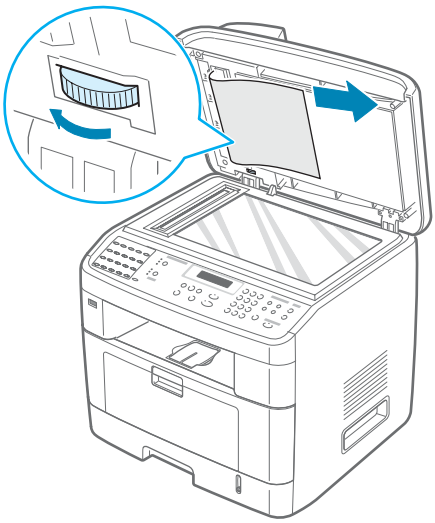

4. Close the document cover. Then load the removed page(s), if any, back into the ADF.

Clearing Paper Jams

When a paper jam occurs, “Paper Jam” appears on the display. Refer to the table below to locate and clear the paper jam.

Message	Location of Jam	Go to
Paper Jam 0 Open/Close Door	In the paper tray (Tray 1 or Tray 2)	below and page 9.6
Paper Jam 1 Open/Close Door	In the paper exit area	page 9.7
Paper Jam 2 Check Inside	In the fuser area or around the toner cartridge.	page 9.9
MP Tray Jam [Door Open]	In the Multipurpose tray	page 9.10

To avoid tearing the paper, pull out the jammed paper gently and slowly. Follow the instructions in the following sections to clear the jam.

In Tray 1

1 Open and close the front door. The jammed paper automatically exits the machine.

If the paper does not exit, continue to step 2.

2 Pull Tray 1 open.

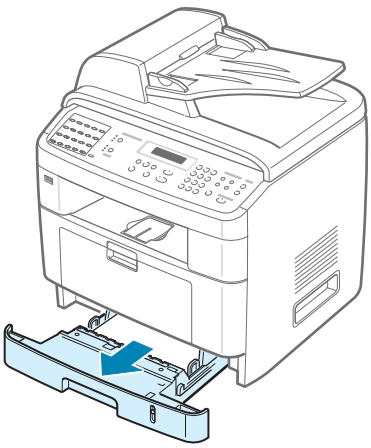

3 Remove the jammed paper by gently pulling it straight out.

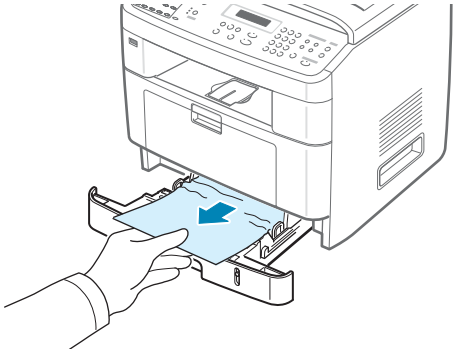

If there is any resistance and the paper does not move when you pull, or if you cannot see the paper in this area, check the fuser area around the toner cartridge. See page 9.9.

4 Insert the paper tray into the machine until it snaps into place.

5 Open and close the front door to resume printing.

In Optional Tray 2

1 Pull the optional Tray 2 open.

2 Remove the jammed paper from the machine.

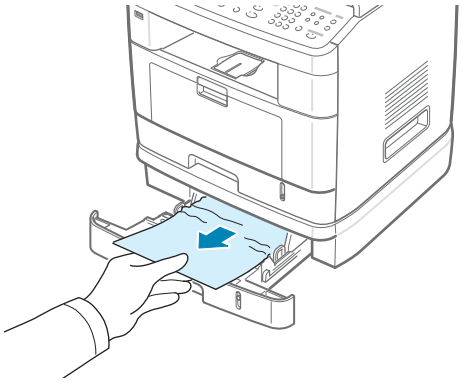

If there is any resistance and the paper does not move when you pull, or if you cannot see the paper in this area, go to step 3.

3 Pull the standard Tray 1 open.

4 Pull the paper straight up and out.

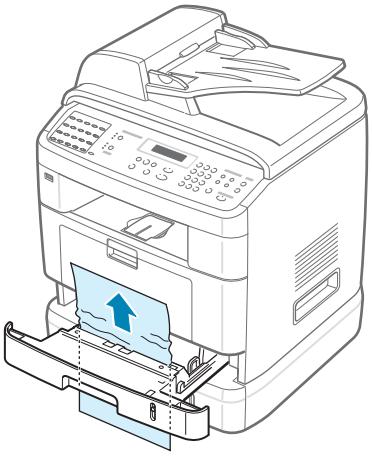

5 Insert Tray 1 into the machine until it snaps into place.

6 Open and close the front door to resume printing.

In the Paper Exit Area

1 Open and close the front door. The jammed paper automatically exits the machine.

If the paper does not exit, continue to step 2.

2 Gently pull the paper out of the front output tray. Skip to step 6.

3 If there is any resistance and the paper does not move when you pull, or if you cannot see the paper in the front output tray, open the rear door.

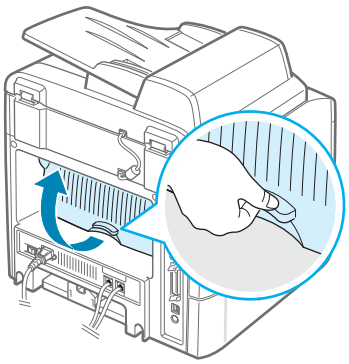

4 Remove the jammed paper by gently pulling it straight out.

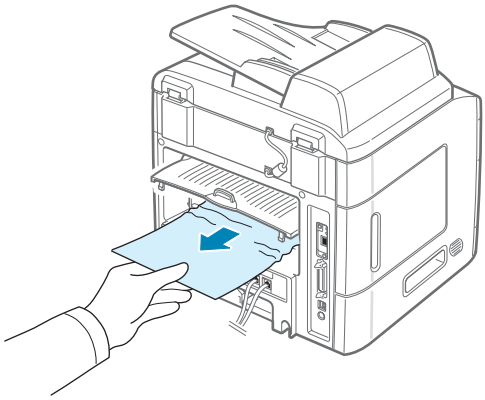

5 Close the rear door.

6 Open and close the front door to resume printing.

In the Fuser Area or Around the Toner Cartridge

NOTE: The fuser area is hot. Take care when removing paper from the machine.

1 Open the front door and pull the toner cartridge out, lightly pushing it down.

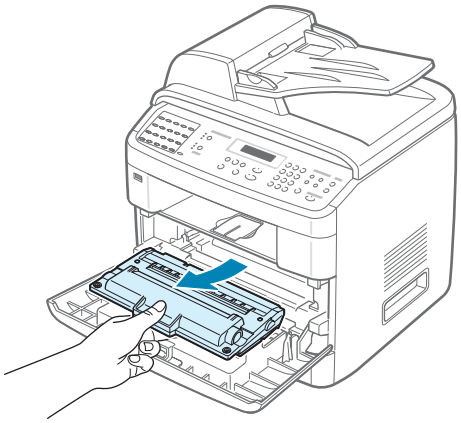

2 Remove the jammed paper by gently pulling it straight out.

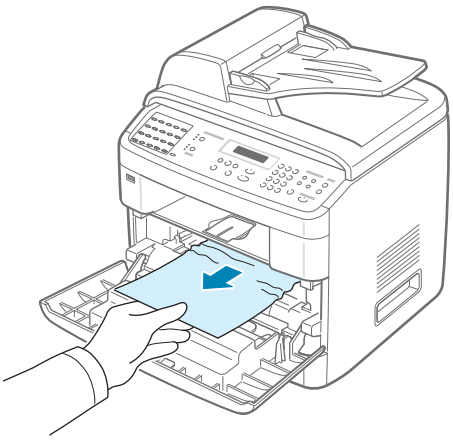

3 Replace the toner cartridge and close the front door. Printing automatically resumes.

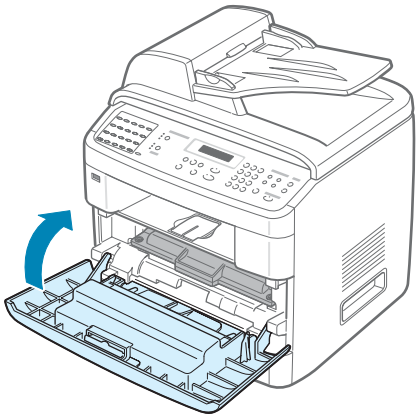

In the Multipurpose Tray

"MP Tray Jam [Door Open]" appears on the display when you try to print using the Multipurpose tray and the machine does not detect paper. This may be a lack of paper or improper paper loading.

If the paper is not feeding properly, pull the paper out of the machine.

To resume printing, open and close the front door.

Tips for Avoiding Paper Jams

By selecting the correct paper types, most paper jams can be avoided. When a paper jam occurs, follow the steps outlined in "Clearing Paper Jams" on page 9.5.

- Follow the procedures in "Loading Paper" on page 2.7. Ensure that the adjustable guides are positioned correctly.
- Do not overload the paper tray. Ensure that the paper is below the paper capacity mark on the inside wall of the paper tray.
- Do not remove paper from the tray while your machine is printing.
- Flex, fan, and straighten the paper before loading.
- Do not use creased, damp, or highly curled paper.
- Do not mix paper types in the paper tray.
- Use only recommended print materials. See "Paper Specifications" on page D.6.
- Ensure that the recommended print side of print materials is facing down in the paper tray and facing up in the Multipurpose tray.
- If paper jams occur frequently when you print on A5-sized paper:

  - Load the paper into the tray, as shown below.

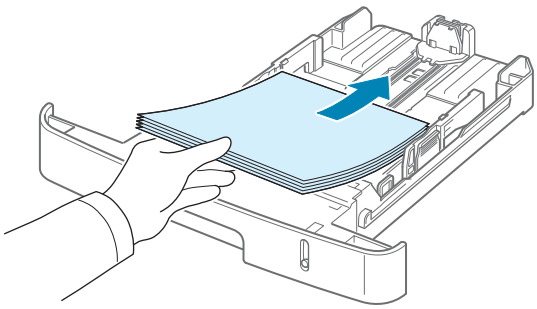

  - Set the page orientation to **Landscape** in the printer properties window. See page 4.5.

Clearing LCD Error Messages

Display	Meaning	Suggested solutions
Cancel ? 1:Yes 2:No (only for the SCX-4720F)	Your machine's memory has become full while trying to store a document into memory.	To cancel the fax job, press the **1** button to accept "Yes." If you want to send there pages that have been successfully stored, press the **2** button to accept "No." You should send the remaining pages later, when memory is available.
[Comm. Error] (only for the SCX-4720F)	The machine has a communication problem.	Ask the sender to try again.
Delayed Function Full (only for the SCX-4720F)	The delayed fax jobs queue is full.	Cancel unnecessary delayed fax job.
Document Jam	The loaded document has jammed in the ADF (Automatic Document Feeder).	Clear the document jam. See page 9.2.
[Door Open]	The front door is not securely latched.	Close the door until it locks into place.
Enter Again	You entered an unavailable item.	Enter the correct item again.
Low Heat Error	There is a problem in the fuser unit.	Unplug the power cord and plug it back in. If the problem persists, please call for service.
Open Heat Error		
[Over Heat]		
Function Impossible	You have tried to use a combination of machine functions that can not be used at the same time.	Reduce the number of selected functions or use only one function at a time.
Group Not Available (only for the SCX-4720F)	You have tried to select a group location number where only a single location number can be used, such as when adding locations for a broadcast operation.	Use a speed dial number or dial a number manually using the number keypad.

Display	Meaning	Suggested solutions
[Incompatible] (only for the SCX-4720F)	The remote machine did not have the requested feature, such as a delayed transmission. This message also occurs if the remote machine does not have enough memory space to complete the operation you are attempting.	Reconfirm the remote machine's features.
[Jam 1] or [No Cartridge]	Paper has jammed in the paper exit area. Or, the toner cartridge is not installed.	Clear the jam. See page 9.7. Or, install the toner cartridge. See page 2.5.
[Line Busy] (only for the SCX-4720F)	The receiving party did not answer or the line is already engaged.	Try again after a few minutes.
[Line Error] (only for the SCX-4720F)	Your machine cannot connect with the remote machine or has lost contact because of a problem with the phone line.	Try again. If the problem persists, wait an hour or so for the line to clear and try again. Or, turn the ECM mode on. See page 7.40.
Load Document	You have attempted to set up a copy or fax operation with no document loaded into the ADF.	Load a document into the ADF and try again.
[LSU Error]	A problem has occurred in the LSU (Laser Scanning Unit).	Unplug the power cord and plug it back in. If the problem persists, please call for service.
Memory Full (only for the SCX-4720F)	The memory is full.	Delete unnecessary documents and retransmit after more memory becomes available. Alternatively, split the transmission into more than one operation.
MP Tray Jam [Door Open]	A paper jam has occurred in the Multipurpose tray. Or, the machine detects improper feeding from the Multipurpose tray.	Clear the jam. See page 9.10. Or, load paper in the Multipurpose tray correctly. See page 3.6.

Display	Meaning	Suggested solutions
[No Answer] (only for the SCX-4720F)	The receiving fax machine has not answered after several redial attempts.	Try again. Make sure that the receiving machine is operational.
No. Not Assigned (only for the SCX-4720F)	The one-touch or speed dial location you tried to use has no number assigned to it.	Dial the number manually using the number keypad or assign the number. For storing a number, see "Automatic Dialing" on page 7.19.
No. Not Available (only for the SCX-4720F)	You have tried to delete the number for a delayed fax job.	Verify the number to be deleted and try again. Or, delete the number after the delayed fax job has been sent.
[Non-Samsung] [Cartridge]	You have used an unauthorized cartridge.	You must use a Samsung approved cartridge.
[No Paper] Add Paper	The paper in the paper tray has run out.	Load paper in the paper tray. See page 2.7.
Operation Not Assigned (only for the SCX-4720F)	You are doing the Add/ Cancel operation, but there are no jobs waiting.	Check the display to see if there are any scheduled jobs. The display should indicate them in Standby mode; for example, Delay Fax.
Paper Jam 0 Open/Close Door	Paper has jammed in the feeding area of the paper tray.	Clear the jam. See page 9.5 and page 9.6.
Paper Jam 1 Open/Close Door	Paper has jammed in the paper exit area.	Clear the jam. See page 9.7.
Paper Jam 2 Check Inside	Paper has jammed in the fuser area.	Clear the jam. See page 9.9.
[Power Failure]	Power has turned off then on and the machine's memory has not been saved.	The job which you were trying to do before the power failure must be completely re-done.
Priority Fax Function Full (only for the SCX-4720F)	The priority fax jobs queue is full.	Cancel unnecessary priority fax jobs.
[Retry Redial?] (only for the SCX-4720F)	The machine is waiting for a specified time interval to redial a previously busy station.	You can press **Enter** to immediately redial, or **Stop/ Clear** to cancel the redial operation.

Display	Meaning	Suggested solutions
Scanner Locked	The scanner module is locked	Unlock the scanner (see page 2.3) and press **Stop/Clear**.
[Stop Pressed]	The **Stop/Clear** button has been pressed during a copy or fax operation.	Try again.
[Toner Empty] Replace Toner	The toner cartridge has run out. The machine stops printing.	Replace the toner cartridge with a new one. See page 8.8.
[Toner Low]	The toner is almost empty.	Take out the toner cartridge and gently shake it. By doing this, you can temporarily reestablish printing operations.

Solving Other Problems

The following chart lists some conditions that may occur and the recommended solutions. Follow the suggested solutions until the problem is corrected. If the problem persists, please call for service.

Paper Feeding Problems

Condition	Suggested solutions
Paper is jammed during printing.	Clear the paper jam. See page 9.5.
Paper sticks together.	• Ensure that there is not too much paper in the paper tray. The paper tray can hold up to 250 sheets of paper, depending on the thickness of your paper. • Make sure that you are using the correct type of paper. See "Paper Specifications" on page D.6. • Remove paper from the paper tray and flex or fan the paper. • Humid conditions may cause some paper to stick together.
Multiple sheets of paper do not feed.	• Different types of paper may be stacked in the paper tray. Load paper of only one type, size, and weight. • If multiple sheets have caused a paper jam, clear the paper jam. See page 9.5.
Paper does not feed into the machine.	• Remove any obstructions inside the machine. • Paper has not been loaded correctly. Remove paper from the tray and reload it correctly. • There is too much paper in the paper tray. Remove excess paper from the tray. • The paper is too thick. Use only paper that meets the specifications required by the machine. See "Paper Specifications" on page D.6.
The paper keeps jamming.	• There is too much paper in the paper tray. Remove excess paper from the tray. If you are printing on special materials, use the Multipurpose tray. • An incorrect type of paper is being used. Use only paper that meets the specifications required by the machine. See "Paper Specifications" on page D.6. • There may be debris inside the machine. Open the front door and remove the debris.
Transparencies stick together in the paper exit.	Use only transparencies specifically designed for laser printers. Remove each transparency as it exits from the machine.

Condition	Suggested solutions
Envelopes skew or fail to feed correctly.	Ensure that the paper guides are against both sides of the envelopes.

Printing Problems

Condition	Possible cause	Suggested solutions
The machine does not print.	The machine is not receiving power.	Check the power cord connections. Check the power switch and the power source.
	The machine is not selected as the default printer.	Select **SCX-4x20 Series PCL 6** as your default printer in your Windows.
	Check the machine for the following: • The front door is not closed. • Paper is jammed. • No paper is loaded. • The toner cartridge is not installed.	After locating the problem, clear it. • Close the door. • Clear the paper jam. See page 9.5. • Load paper. See page 2.7. • Install the toner cartridge. See page 2.5. If a printer system error occurs, contact your service representative.
	The connection cable between the computer and the machine is not connected properly.	Disconnect the printer cable and reconnect it.
	The connection cable between the computer and the machine is defective.	If possible, attach the cable to another computer that is working properly and print a job. You can also try using a different printer cable.
	The port setting is incorrect.	Check the Windows printer setting to make sure that the print job is sent to the correct port, for example, LPT1. If the computer has more than one port, make sure that the machine is attached to the correct one.
	The machine may be configured incorrectly.	Check the printer properties to ensure that all of the print settings are correct.
	The printer driver may be incorrectly installed.	Repair the printer software. See page 2.33.
	The machine is malfunctioning.	Check the display message on the control panel to see if the machine is indicating a system error.

Condition	Possible cause	Suggested solutions
The machine selects print materials from the wrong paper source.	The paper source selection in the printer properties may be incorrect.	For many software applications, the paper source selection is found under the **Paper** tab within the printer properties. Select the correct paper source. See page 4.6.
A print job is extremely slow.	The job may be very complex.	Reduce the complexity of the page or try adjusting the print quality settings. The maximum print speed of your machine is 22 PPM for Letter-sized paper and 20 PPM for A4-sized paper.
	If you are using Windows 9x/Me, the Spooling Setting may be set incorrectly.	From the **Start** menu, choose **Settings** and **Printers**. Right-click the **SCX-4x20 Series PCL 6** machine icon, choose **Properties**, click the **Details** tab, and then choose the **Spool Settings** button. Select the desired spool setting.
Half the page is blank.	The page orientation setting may be incorrect.	Change the page orientation in your application. See page 4.5.
	The paper size and the paper size settings do not match.	Ensure that the paper size in the printer driver settings matches the paper in the tray. Or, ensure that the paper size in the printer driver settings matches the paper selection in the software application settings you use.
The machine prints, but the text is wrong, garbled, or incomplete.	The printer cable is loose or defective.	Disconnect the printer cable and reconnect. Try a print job that you have already printed successfully. If possible, attach the cable and the machine to another computer and try a print job that you know works. Finally, try a new printer cable.
	The wrong printer driver was selected.	Check the application's printer selection menu to ensure that your machine is selected.
	The software application is malfunctioning.	Try printing a job from another application.
	The operating system is malfunctioning.	Exit Windows and reboot the computer. Turn the machine off and then back on again.

Condition	Possible cause	Suggested solutions
Pages print, but are blank.	The toner cartridge is defective or out of toner.	Redistribute the toner, if necessary. See page 8.7. If necessary, replace the toner cartridge.
	The file may have blank pages.	Check the file to ensure that it does not contain blank pages.
	Some parts, such as the controller or the board, may be defective.	Contact a service representative.
The illustrations print incorrectly in Adobe Illustrator.	The setting in the software application is wrong.	Select **Download as Bit Image** in the **TrueType Options** window of the Graphic properties and print the document again.

Printing Quality Problems

If the inside of the machine is dirty or paper has been loaded improperly, you may notice a reduction in print quality. See the table below to clear the problem.

Condition	Suggested solutions
Light or faded print AaBbCc AaBbCc AaBbCc AaBbCc AaBbCc	If a vertical white streak or faded area appears on the page: • The toner supply is low. You may be able to temporarily extend the toner cartridge life. See "Redistributing Toner" on page 8.7. If this does not improve the print quality, install a new toner cartridge. • The paper may not meet paper specifications; for example, the paper is too moist or too rough. See "Paper Specifications" on page D.6. • If the entire page is light, the print resolution setting is too low or the toner save mode is on. Adjust the print resolution and turn the toner save mode off. See page 4.8 and page 2.23, respectively. • A combination of faded or smeared defects may indicate that the toner cartridge needs cleaning. See "Cleaning the Drum" on page 8.11. • The surface of the LSU part inside the machine may be dirty. Clean the LSU (see page 8.4).

Condition	Suggested solutions
Toner specs 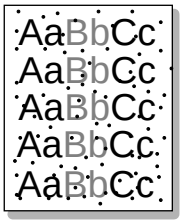 	• The paper may not meet specifications; for example, the paper is too moist or too rough. See "Paper Specifications" on page D.6. • The transfer roller may be dirty. Clean the inside of your machine. See "Cleaning the Inside" on page 8.3. • The paper path may need cleaning. See "Cleaning the Drum" on page 8.11.
Dropouts 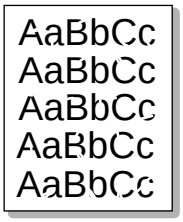 	If faded areas, generally rounded, occur randomly on the page: • A single sheet of paper may be defective. Try reprinting the job. • The moisture content of the paper is uneven or the paper has moist spots on its surface. Try a different brand of paper. See "Paper Specifications" on page D.6. • The paper lot is bad. The manufacturing processes can cause some areas to reject toner. Try a different kind or brand of paper. • The toner cartridge may be defective. See "Vertical repetitive defects" on page 9.21. • If these steps do not correct the problem, contact a service representative.
Vertical lines 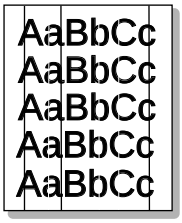 	If black vertical streaks appear on the page: • The drum inside the toner cartridge has probably been scratched. Remove the toner cartridge and install a new one. See "Replacing the Toner Cartridge" on page 8.8. If white vertical streaks appear on the page: • The surface of the LSU part inside the machine may be dirty. CLean the LSU (see page 8.4).
Gray background 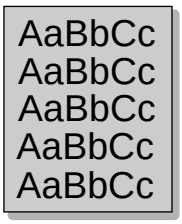 	If the amount of background shading becomes unacceptable: • Change to a lighter weight paper. See "Paper Specifications" on page D.6. • Check the machine's environment: very dry (low humidity) or high humidity (higher than 80% RH) conditions can increase the amount of background shading. • Remove the old toner cartridge and install a new one. See "Replacing the Toner Cartridge" on page 8.8.

Condition	Suggested solutions
Toner smear 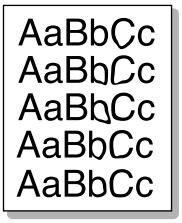	• Clean the inside of the machine. See "Cleaning the Inside" on page 8.3. • Check the paper type and quality. See "Paper Specifications" on page D.6. • Remove the toner cartridge and install a new one. See "Replacing the Toner Cartridge" on page 8.8.
Vertical repetitive defects 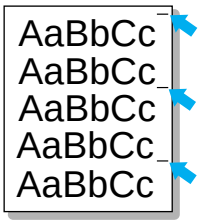	If marks repeatedly appear on the printed side of the page at even intervals: • The toner cartridge may be damaged. If a repetitive mark occurs on the page, print a cleaning sheet several times to clean the cartridge; see "Cleaning the Drum" on page 8.11. After the printout, if you still have the same problems, remove the toner cartridge and install a new one. See "Replacing the Toner Cartridge" on page 8.8. • Parts of the machine may have toner on them. If the defects occur on the back of the page, the problem will likely correct itself after a few more pages. • The fusing assembly may be damaged. Contact a service representative.
Background scatter 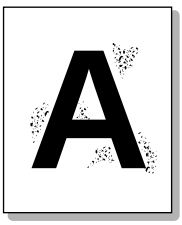	Background scatter results from bits of toner randomly distributed on the printed page. • The paper may be too damp. Try printing with a different batch of paper. Do not open packages of paper until necessary so that the paper does not absorb too much moisture. • If background scatter occurs on an envelope, change the printing layout to avoid printing over areas that have overlapping seams on the reverse side. Printing on seams can cause problems. • If background scatter covers the entire surface area of a printed page, adjust the print resolution through your software application or the printer properties.
Misformed characters 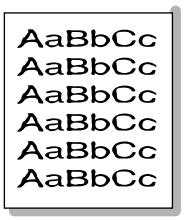	• If characters are improperly formed and producing hollow images, the paper stock may be too slick. Try a different paper. See "Paper Specifications" on page D.6. • If characters are improperly formed and producing a wavy effect, the scanner unit may need service. For service, contact a service representative.

Condition	Suggested solutions
Page skew 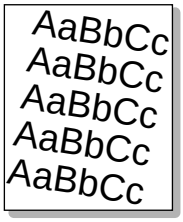	• Ensure that the paper is loaded properly. • Check the paper type and quality. See "Paper Specifications" on page D.6. • Ensure that the paper or other material is loaded correctly and the guides are not too tight or too loose against the paper stack.
Curl or wave 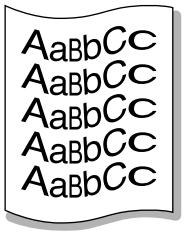	• Ensure that the paper is loaded properly. • Check the paper type and quality. Both high temperature and humidity can cause paper curl. See "Paper Specifications" on page D.6. • Turn over the stack of paper in the paper tray. Also try rotating the paper 180° in the tray. • Try printing to the rear output slot.
Wrinkles or creases 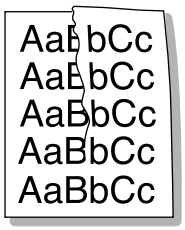	• Ensure that the paper is loaded properly. • Check the paper type and quality. See "Paper Specifications" on page D.6. • Turn over the stack of paper in the paper tray. Also try rotating the paper 180° in the tray. • Try printing to the rear output slot.
Back of printouts are dirty 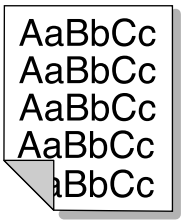	Check for leaking toner. Clean the inside of the machine. See "Cleaning the Inside" on page 8.3.
Black pages 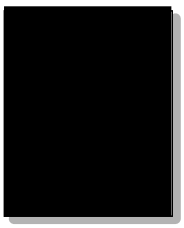	• The toner cartridge may not be installed properly. Remove the cartridge and reinsert. • The toner cartridge may be defective and need replacing. Remove the toner cartridge and install a new one. See "Replacing the Toner Cartridge" on page 8.8. • The machine may require repair. Contact a service representative.

Condition	Suggested solutions
Loose toner	• Clean the inside of the machine. See "Cleaning the Inside" on page 8.3. • Check the paper type and quality. See "Paper Specifications" on page D.6. • Remove the toner cartridge and install a new one. See "Replacing the Toner Cartridge" on page 8.8. • If the problem persists, the machine may require repair. Contact a service representative.
Character Voids	Character voids are white areas within parts of characters that should be solid black: • If you are using transparencies, try another type of transparency. Because of the composition of transparencies, some character voids are normal. • You may be printing on the wrong surface of the paper. Remove the paper and turn it around. • The paper may not meet paper specifications. See "Paper Specifications" on page D.6.
Horizontal stripes	If horizontally aligned black streaks or smears appear: • The toner cartridge may be installed improperly. Remove the cartridge and reinsert. • The toner cartridge may be defective. Remove the toner cartridge and install a new one. See "Replacing the Toner Cartridge" on page 8.8. • If the problem persists, the machine may require repair. Contact a service representative.
Curl	If the printed paper is curled or paper does not feed into the machine: • Turn over the stack of paper in the input tray. Also try rotating the paper 180° in the input tray. • Try printing to the rear output slot.

Copying Problems

Condition	Suggested solutions
Copies are too light or too dark.	Use the **Darkness** button to darken or lighten the background of the copies.
Smears, lines, marks, or spots appears on copies.	• If defects are on the original, press the **Darkness** button to lighten the background of your copies. • If no defects are on the original, clean the scan unit. See page 8.5.
Copy image is skewed.	• Ensure that the original is face down on the document glass or face up in the ADF (Automatic Document Feeder). • Check that the copy paper is loaded correctly.
Blank copies print out.	Ensure that the original is face down on the document glass or face up in the ADF.
Image rubs off the copy easily.	• Replace the paper in the paper tray with paper from a new package. • In high humidity areas, do not leave paper in the machine for extended periods of time.
Frequent copy paper jams occur.	• Fan the stack of paper, then turn it over in the paper tray. Replace the paper in the tray with a fresh supply. Check/adjust the paper guides, if necessary. • Ensure that the paper is the proper paper weight. 75 g/m^2 (20 lb) bond paper is recommended. • Check for copy paper or pieces of copy paper remaining in the machine after a paper jam has been cleared.
Toner cartridge produces fewer copies than expected before running out of toner.	• Your originals may contain pictures, solids, or heavy lines. For example, your originals may be forms, newsletters, books, or other documents that use more toner. • The machine may be turned on and off frequently. • The document cover may be left open while copies are being made.

Scanning Problems

Condition	Suggested solutions
The scanner does not work.	• Make sure that you place the document to be scanned face down on the document glass, or face up in the Automatic Document Feeder. • There may not be enough available memory to hold the document you want to scan. Try the Prescan function to see if that works. Try lowering the scan resolution rate. • Check that the USB or parallel cable is connected properly. • Make sure that the USB or parallel cable is not defective. Switch the cable with a known good cable. If necessary, replace the cable. • If you are using a parallel cable, ensure that it is compliant with IEEE 1284 standards. • Check that the scanner is configured correctly. Check scan setting in the SmarThru Configuration or the application you want to use to make certain that the scanner job is being sent to the correct port, for example, LPT1.
The unit scans very slowly.	• Check if the machine is printing received data. If so, scan the document after the received data has been printed. • Graphics are scanned more slowly than text. • Communication speed slows in scan mode because of the large amount of memory required to analyze and reproduce the scanned image. Set your computer to the ECP printer mode through BIOS setting. It will help to increase the speed. For details about how to set BIOS, refer to your computer User's Guide.

Condition	Suggested solutions
Message appears on your computer screen: • "Device can't be set to the H/W mode you want." • "Port is being used by another program." • "Port is Disabled. • "Scanner is busy receiving or printing data. When the current job is completed, try again." • "Invalid handle." • "Scanning has failed."	• There may be a copying or printing job in progress. When that job is complete, try your job again. • The Selected port is currently being used. Restart your computer and try again. • The printer cable may be improperly connected or the power may be off. You must use a parallel cable that supports IEEE-1284 bi-directional communications. • The scanner driver is not installed or the operating environment is not set up properly. • Ensure that the machine is properly connected and the power is on, Then restart your computer. • The USB cable may be improperly connected or the power may be off. • Do not use parallel and USB cables at the same time.

Fax Problems *(SCX-4720F Only)*

Condition	Suggested solutions
The machine is not working, there is no display and the buttons are not working.	• Unplug the power cord and plug it in again. • Ensure that there is power to the electrical outlet.
No dial tone sounds.	• Check that the phone line is connected properly. • Check that the phone socket in the wall is working by plugging in another phone.
The numbers stored in memory do not dial correctly.	Make sure that the numbers are stored in memory correctly. Print a Phonebook list, referring to page 7.27.
The document does not feed into the machine.	• Make sure that the document is not wrinkled and you are putting it in correctly. Check that the document is the right size, not too thick or thin. • Make sure that the ADF (Automatic Document Feeder) cover is firmly closed.
Faxes are not received automatically.	• Fax mode should be selected. • Make sure that there is paper in the tray. • Check to see if the display shows "Memory Full."

Condition	Suggested solutions
The machine does not send.	• Make sure that the document is loaded in the ADF or on the document glass. • "TX" should show up on the display. • Check the fax machine you are sending to, to see if it can receive your fax.
The incoming fax has blank spaces or is of poor-quality.	• The fax machine sending you the fax may be faulty. • A noisy phone line can cause line errors. • Check your machine by making a copy. • The toner cartridge may be empty. Replace the toner cartridge, referring to page 8.8.
Some of the words on an incoming fax are stretched.	The fax machine sending you the fax had a temporary document jam.
There are lines on the documents you send.	Check your scanning glass for marks and clean it. See page 8.5.
The machine dials a number, but a connection with the other fax machine fails.	The other fax machine may be turned off, out of paper, or cannot answer incoming calls. Speak with the other machine operator and ask her/him to sort out the problem.
Documents are not stored in memory.	There may not be enough memory to store the document. If the display shows a "Memory Full" message, delete from memory any documents you no longer need and then try again to store the document.
Blank areas appear at the bottom of each page or on other pages, with a small strip of text at the top.	You may have chosen the wrong paper settings in the user option setting. For details about paper settings, see page 2.20.

Common Linux Problems

Problem	Possible Cause and Solution
The machine doesn't print	• Check if the printer driver is installed in your system. Open MFP configurator and switch to the Printers tab in Printers configuration window to look at the list of available printers. Make sure that your machine is displayed on the list. If not, please, invoke Add new printer wizard to set up your device. • Check if the printer is started. Open Printers configuration and select your machine on the printers list. Look at the description in the Selected printer pane. If its status contains "(stopped)" string, please, press the **Start** button. After that normal operation of the printer should be restored. The "stopped" status might be activated when some problems in printing occurred. For instance, this could be an attempt to print document when MFP port is claimed by a scanning application. • Check if the MFP port is not busy. Since functional components of MFP (printer and scanner) share the same I/O interface (MFP port), the situation of simultaneous access of different "consumer" application to the same MFP port is possible. To avoid possible conflicts, only one of them at a time is allowed to gain control over the device. The other "consumer" will encounter "device busy" response. You should open MFP ports configuration and select the port assigned to your printer. In the Selected port pane you can see if the port is occupied by some other application. If this is the case, you should wait for completion of the current job or should press Release port button, if you are sure that the present owner is not functioning properly. Check if your application has special print option such as "-oraw". If "-oraw" is specified in the command line parameter then remove it to print properly. For Gimp front-end, select "print" -> "Setup printer" and edit command line parameter in the command item.
The machine does not appear on the scanners list	• Check if your machine is attached to your computer. Make sure that it is connected properly via the USB port and is turned on. • Check if the scanner driver for you machine is installed in your system. Open MFP Configurator, switch to Scanners configuration, then press **Drivers**. Make sure that driver with a name corresponding to your machine's name is listed in the window.

Problem	Possible Cause and Solution
The machine does not appear on the scanners list (continued)	• Check if the MFP port is not busy. Since functional components of MFP (printer and scanner) share the same I/O interface (MFP port), the situation of simultaneous access of different "consumer" application to the same MFP port is possible. To avoid possible conflicts, only one of them at a time is allowed to gain control over the device. The other "consumer" will encounter "device busy" response. This can usually happen while starting scan procedure, and appropriate message box displays. To identify the source of the problem, you should open MFP ports configuration and select the port assigned to your scanner. MFP port's symbol /dev/mfp0 corresponds to LP:0 designation displayed in the scanners' options, /dev/mfp1 relates to LP:1 and so on. USB ports start at /dev/mfp4, so scanner on USB:0 relates to /dev/mfp4 respectively and so forth sequentially. In the Selected port pane you can see if the port is occupied by some other application. If this is the case, you should wait for completion of the current job or should press Release port button, if you are sure that the present port's owner is not functioning properly.
The machine doesn't scan	• Check if a document is loaded into the machine. • Check if your machine is connected to the computer. Make sure if it is connected properly if I/O error is reported while scanning. • Check if MFP port is not busy. Since functional components of MFP (printer and scanner) share the same I/O interface (MFP port), the situation of simultaneous access of different "consumer" application to the same MFP port is possible. To avoid possible conflicts, only one of them at a time is allowed to gain control over the device. The other "consumer" will encounter "device busy" response. This can usually happen while starting scan procedure, and appropriate message box will be displayed. To identify the source of the problem, you should open MFP ports configuration and select the port assigned to your scanner. MFP port's symbol /dev/mfp0 corresponds to LP:0 designation displayed in the scanners' options, /dev/mfp1 relates to LP:1 and so on. USB ports start at /dev/mfp4, so scanner on USB:0 relates to /dev/mfp4 respectively and so forth sequentially. In the Selected port pane you can see if the port is occupied by some other application. If this is the case, you should wait for completion of the current job or should press Release port button, if you are sure that the present port's owner is not functioning properly.

Problem	Possible Cause and Solution
I can't print when I installed both Linux Print Package (LPP) and MFP driver on the same machine simultaneously.	• Since both Linux Printer Package and MFP driver make a symbolic link to "lpr" printing command, which is commonly used on Unix clones, it is not recommended to use both package on the same machine. • If you still want to use both packages simultaneously, please install the LPP first. • If you want to uninstall only one of them, please uninstall both packages and install that one you want to use again. • If you don't want to uninstall MFP driver and install it again, you may make the necessary symbolic link yourself. Please, log in as root user and invoke the following command: ln -sf /usr/local/bin/samsung/slpr /usr/bin/lpr
Can't scan via Gimp Front-end.	• Check if Gimp Front-end has "Xsane:Device dialog.." on the "Acquire" menu. If not, you should install Xsane plug-in for Gimp on the your computer. You can find Xsane plug-in package for Gimp on Linux distribution CD or Gimp home page. For the detail information, refer to the Help for Linux distribution CD or Gimp Front-end application. If you wish to use other kind of scan application, refer to the Help for application.
I encounter error "Cannot open MFP port device file" when printing a document.	Please avoid changing print job parameters (via SLPR utility, for example) while a print job is in progress. Known versions of CUPS server break the print job whenever print options are changed and then try to restart the job from the beginning. Since Linux MFP driver locks MFP port while printing, the abrupt termination of the driver keeps the port locked and therefore unavailable for subsequent print jobs. If this situation occurred, please, try to release the MFP port.

10 Using USB Flash Drive

This chapter explains how to use a USB flash drive with your machine.

This chapter includes:

- **About USB Flash Drives**
- **Installing a USB Flash Drive**
- **Scanning to USB Flash Drive**
- **Managing the USB Flash Drive**
- **Printing From the USB Flash Drive**
- **Backing Up Data**

About USB Flash Drives

USB flash drivers are available with various memory capacities to give you enough room to store documents, presentations, downloaded music and videos, high resolution photographs, or whatever other files you want to take with you.

Simply insert a USB flash drive into the USB port in the front of your machine and your machine will automatically detect it as a removable disk drive. Then you can do the following:

- Scan documents and save them on the USB flash drive.
- Print the data stored on the USB flash drive.
- Back up data, such as Phonebook entries (for the SCX-4720F only) and the system settings of your machine.
- Restore backup files to the machine's memory.
- Delete scanned images.
- Format the USB flash drive.
- Check the available memory space.

Installing a USB Flash Drive

There is a USB port in the front of your machine. This port is designed for USB flash drives.

CAUTIONS:

- Do not remove the USB flash drive while the machine is in operation. This may damage your machine.
- If a USB flash drive has certain some features active, such as security settings and password settings, your machine may not automatically detect it. For details about these features, see the User's Guide for the USB flash drive.

To install a USB flash drive, hold the USB flash drive and insert it into the USB port in the front of your machine.

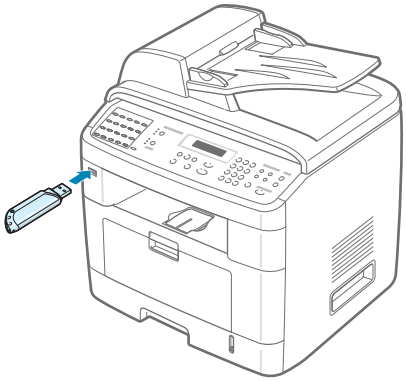

Once you installed the USB flash drive, you can immediately print files stored on it.

Scanning to USB Flash Drive

You can scan a document and save the scanned image on the USB flash drive. There are two ways of doing this: you can scan to the USB flash drive using the default settings, or you can manually select your own settings.

Scanning With Default Settings

1. Load the document face up into the ADF.

   OR

   Place a single document face down on the document glass.

   For details about loading a document, see page 7.6.

2. Make sure that the USB flash drive is inserted into the USB port in the front of the machine. If necessary, insert the flash drive. See page 10.2.

3. Press **Scan-to** on the control panel.

   The first available menu item, “USB Memory,” appears on the bottom line of the display.

4 Press **Enter**. The display shows the available memory space for about 2 seconds and the first available menu item, “Auto Scan,” appears on the bottom line of the display.

5 Press **Enter** to start scanning. The scanned image is saved on the USB flash drive.

6 When a document is loaded on the document glass, the display shows “Another Page?” on the top line after the page has been scanned into memory. If you have another page, remove the scanned page and place the next page on the glass. Select “1.Yes.” Repeat as necessary.

After all of the pages have been scanned, select “2.No” when the display asks “Another Page?.”

7 To return to Standby mode, press **Stop/Clear**.

Scanning With Your Own Settings

1 Load the document face up into the ADF.

OR

Place a single document face down on the document glass.

For details about loading a document, see page 7.6.

2 Make sure that the USB flash drive is inserted into the USB port in the front of the machine. If necessary, insert the flash drive. See page 10.2.

3 Press **Scan-to** on the control panel.

The first available menu item, “USB Memory,” appears on the bottom line of the display.

4 Press **Enter**. The display shows the available memory space for about 2 seconds and the first available menu item, “Auto Scan,” appears on the bottom line of the display.

5 Press the scroll button (◀ or ▶) until “Manual Scan” appears on the bottom line of the display. Press **Enter**.

6 Press the scroll button (◀ or ▶) and select the size of the image to be scanned.

7 Press the scroll button (◀ or ▶) and select the file format in which the document is to be scanned.

8 Press **Enter**.

9 If you selected "BMP" in step 7, you are asked to select a color format, Color, Gray, or Mono, by pressing the scroll button (◀ or ▶).

If you selected "TIFF" or "PDF" in step 7, you can save a multiple-page document as a single file. After you select "TIFF" or "PDF", the machine displays "Multi Page" and offers you the choice of "On" or "Off." If you select "On" you can save multiple pages as a single file, but this feature is only activated when you load your document into the ADF. The ADF can handle documents of up to 50 pages at a time.

10 Press **Enter** to start scanning. The scanned image is saved on the USB flash drive.

11 When a document is loaded on the document glass, the display shows "Another Page?" on the top line after the document has been scanned into memory. If you have another page, remove the scanned page and load the next page on the glass. Select "1.Yes." Repeat as necessary.

After all of the pages have been scanned, select "2.No" when the display asks "Another Page?."

12 To return to Standby mode, press **Stop/Clear**.

Managing the USB Flash Drive

Changing the Default Settings

When you scan a document to the USB flash drive, the default scan options, including scan size and scan format, can be set to the most frequently used modes. These settings are only available when you scan to the USB flash drive.

1. Make sure that the USB flash drive is inserted into the USB port in the front of the machine. If necessary, insert the USB flash drive. See page 10.2.

2. Press **Scan-to** on the control panel.

   The first available menu, item "USB Memory," appears on the bottom line of the display.

3. Press **Enter**. The display shows the available memory space for about 2 seconds and the first available menu item, "Auto Scan," appears on the bottom line of the display.

4. Press the scroll button (◀ or ▶) until "Default-Change" appears on the bottom line of the display.

5. Press **Enter**.

   The first available menu item, "Scan Size," appears on the bottom line.

6. Press **Enter**.

7. Press the scroll button (◀ or ▶) and select the size of the image to be scanned.

8. Press **Enter** to make your selection.

9. Press the ▶ button to scroll to "Scan Format" and press **Enter** to access the menu.

10. Press the scroll button (◀ or ▶) and select the file format in which the document is to be scanned. You can select BMP, TIFF, PDF, or JPEG.

11 Press **Enter**.

12 If you selected "BMP" in step 10, you are asked to select a color format, Color, Gray, or Mono, by pressing the scroll button (◀ or ▶).

If you selected "TIFF" or "PDF" in step 10, you can save a multiple-page document as a single file. After you select "TIFF" or "PDF", the machine displays "Multi Page" and offers you the choice of "On" or "Off." If you select "On" you can save multiple pages as a single file, but this feature is only activated when you load your document into the ADF. The ADF can handle documents of up to 50 pages at a time.

13 Press **Enter** to make your selection.

14 To return to Standby mode, press **Stop/Clear**.

Deleting an Image File

To delete an image file that you scanned and saved on the USB flash drive:

1 Make sure that the USB flash drive is inserted into the USB port in front of the machine. If necessary, insert the USB flash drive. See page 10.2.

2 Press **Scan-to** on the control panel.

The first available menu item, "USB Memory," appears on the bottom line of the display.

3 Press **Enter**. The display shows the available memory space for about 2 seconds and the first available menu item, "Auto Scan," appears on the bottom line of the display.

4 Press the scroll button (◀ or ▶) until you see "File Manage" on the bottom line and press **Enter**.

The first available menu item, "Delete," appears on the bottom line of the display.

5 Press **Enter**.

6 Press the scroll button(◀ or ▶) until you find the folder or file you want.

If you see "D" in the front of a folder name, there are one or more folders in the selected folder.

7 Press **Enter**. The display shows the size of the file for about 2 seconds.

8 If you selected a file in step 5, go to the next step.

If you selected a folder, the first file contained in that folder appears on the bottom line of the display. You can view the other files in the folder by pressing the scroll button (◀ or ▶). When you find the file you want to delete, press **Enter**. The display shows the size of the file for about 2 seconds.

9 When the display asks you to confirm your selection, select "Yes" to delete the folder or file.

To cancel your selection, select "No" by pressing the scroll button (◀ or ▶).

10 After deleting, the display asks if you want to delete another folder or file. Select "Yes" to delete more items, and repeat from step 6.

Otherwise, select "No" by pressing the scroll button (◀ or ▶).

Formatting the USB Flash Drive

1 Make sure that the USB flash drive is inserted into the USB port in the front of the machine. If necessary, insert the USB flash drive. See page 10.2.

2 Press **Scan-to** on the control panel.

The first available menu item, "USB Memory," appears on the bottom line of the display.

3 Press **Enter**. The display shows the available memory space for about 2 seconds and the first available menu item, "Auto Scan," appears on the bottom line of the display.

4 Press the scroll button (◀ or ▶) until you see "File Manage" on the bottom line and press **Enter**.

5 Press the scroll button (◀ or ▶) until you see “Format” on the bottom line and press **Enter**.

6 When the display asks you to confirm your selection, select “Yes” to format the USB flash drive.

To cancel your selection, select “No” by pressing the scroll button (◀ or ▶).

Viewing the USB Memory Status

You can check the amount of memory space available for scanning and saving documents.

1 Make sure that the USB flash drive is inserted into the USB port in the front of the machine. If necessary, insert the USB flash drive. See page 10.2.

2 Press **Scan-to** on the control panel.

The first available menu item, “USB Memory,” appears on the bottom line of the display.

3 Press **Enter**. The display shows the available memory space for about 2 seconds and the first available menu item, “Auto Scan,” appears on the bottom line of the display.

4 Press the scroll button (◀ or ▶) until you see “Check Space” on the bottom line and press **Enter**.

5 The available memory space appears on the display.

To return to the Standby mode, press **Stop/Clear**.

Printing From the USB Flash Drive

You can directly print files stored on the USB flash drive. You can print TIFF, BMP, TXT, and PRN files.

PRN files can be created by selecting **Print** when your file is open, selecting your machine in the **Name** section of the Print window, and then selecting the **Saved File** check box. Save the newly made PRN file to the USB flash drive. Only PRN files created in this fashion can be printed directly from the USB flash drive to the machine.

1. Insert the USB flash drive into the USB port in the front of your machine. For details, see page 10.2.

   Your machine automatically detects the USB flash drive and reads data stored on it.

2. Press the scroll button (◀ or ▶) to select the folder or file you want to print and press **Enter**.

3. If you selected a folder in step 2, the first file name in the folder appears on the bottom line of the display. You can also view the other files in the folder by pressing the scroll button (◀ or ▶). When you find the file that you want to print, go to step 4.

   If you selected a file in step 2, go to the next step.

4. To print the selected file, press **Enter**, **Start**, or **DIRECT PRINT**.

   If you selected a TIFF, BMP, or TXT file in step 2, you can select the number of copies to be printed by pressing the scroll button (◀ or ▶) or entering the number using the numeric keys. Then press **Enter**, **Start**, or **DIRECT PRINT** to print the file.

5. After printing the file, the display asks if you want to print another job. Select “Yes” to print anther jobs, and repeat from step 2. Otherwise, select “No”.

6. To return to Standby mode, press **Stop/Clear**.

Backing Up Data

Your data in the machine's memory are accidentally erased due to power failure or storage failure. Backup helps you protect your Phonebook entries (SCX-4720F only) and the system settings by storing them as backup files on the USB flash drive.

To back up the data:

1. Insert the USB flash drive. For details, see page 10.2.

2. Press **Menu** until "Machine Setup" appears on the top line of the display.

3. Press **Enter** to access the menu.

   The first available menu item, "Machine Id," appears on the bottom line.

4. Press the scroll button (◀ or ▶) until you see "Export Setting" on the bottom line and press **Enter**.

5. If you want to back up the Phonebook entries, when "Phonebook" appears on the bottom line, press **Enter**.

   If you want to back up the system settings of the machine, select "All Settings" by pressing the scroll button (◀ or ▶) and press **Enter**.

6. The data is backed up in the USB flash drive.

   If the file name is already stored on the USB flash drive, you are asked to overwrite it. Select "Yes" to overwrite the data.

   Otherwise, select "No" by pressing the scroll button (◀ or ▶).

7. To return to Standby mode, press **Stop/Clear**.

To restore the data:

1. Insert the USB flash drive. For details, see page 10.2.

2. Press **Menu** until “Machine Setup” appears on the top line of the display.

3. Press **Enter** to access the menu.

   The first available menu item, “Machine Id,” appears on the bottom line.

4. Press the scroll button (◀ or ▶) until you see “Import Setting” on the bottom line and press **Enter**.

5. Select the data type you want to restore, either “Phonebook” or “All Settings” and press **Enter**.

6. Select the file you want to restore and press **Enter**.

   The first available menu item, “Yes,” appears on the bottom line.

7. Press **Enter** to restore the backup file to the machine.

8. To return to Standby mode, press **Stop/Clear**.

A

Using Your Machine In Linux

You can use your machine in a Linux environment.

This chapter includes:

- **Getting Started**
- **Installing the MFP Driver**
- **Using the MFP Configurator**
- **Configuring Printer Properties**
- **Printing a Document**
- **Scanning a Document**

Getting Started

The supplied CD-ROM provides you with Samsung's MFP driver package for using your machine with a Linux computer.

Samsung's MFP driver package contains printer and scanner drivers, providing the ability to print documents and scan images. The package also delivers powerful applications for configuring your machine and further processing of the scanned documents.

After the driver is installed on your Linux system, the driver package allows you to monitor a number of MFP devices via fast ECP parallel ports and USB simultaneously. The acquired documents can then be edited, printed on the same local MFP or network printers, sent by e-mail, uploaded to an FTP site, or transferred to an external OCR system.

The MFP driver package is supplied with a smart and flexible installation program. You don't need to search for additional components that might be necessary for the MFP software: all required packages will be carried onto your system and installed automatically; this is possible on a wide set of the most popular Linux clones.

Installing the MFP Driver

System Requirements

Supported OS

- Redhat 7.1 and above
- Linux Mandrake 8.0 and above
- SuSE 7.1 and above
- Caldera OpenLinux 3.1 and above
- Turbo Linux 7.0 and above
- Slackware 8.1 and above

Recommended Hardware Requirements

- Pentium IV 1 GHz or higher
- RAM 256 MB or higher
- HDD 1 GB or higher

NOTES:

- It's also necessary to claim swap partition of 300 MB or larger for working with large scanned images.
- The Linux scanner driver supports the optional resolution at maximum. see "Scanner and Copier Specifications" on page D.3.

Software

- Linux Kernel 2.4 or higher
- Glibc 2.2 or higher
- CUPS
- SANE

Installing the MFP Driver

1 Make sure that you connect your machine to your computer. Turn both the computer and the machine on.

2 When the Administrator Login window appears, type in *root* in the Login field and enter the system password.

NOTE: You must log in as a super user (root) to install the printer software. If you are not a super user, ask your system administrator.

3 Insert the printer software CD-ROM. The CD-ROM will automatically run.

If the CD-ROM does not automatically run, click the icon at the bottom of the desktop. When the Terminal screen appears, type in:

[root@localhost root]#cd /mnt/cdrom/Linux

[root@localhost root]#./install.sh

NOTE: The installation program runs automatically if you have an autorun software package installed and configured.

4 Click **Install**.

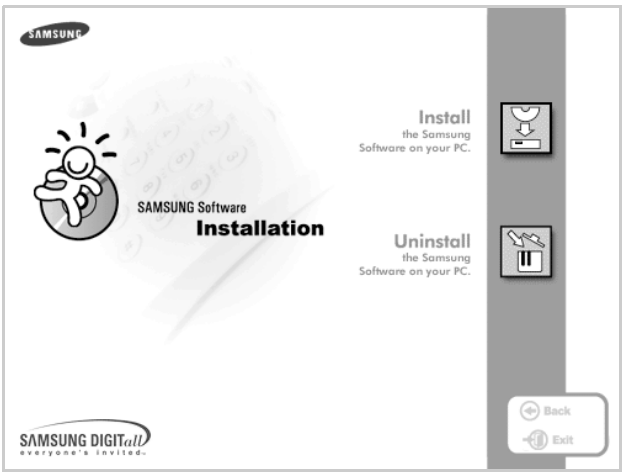

5 When the welcome screen appears, click **Next**.

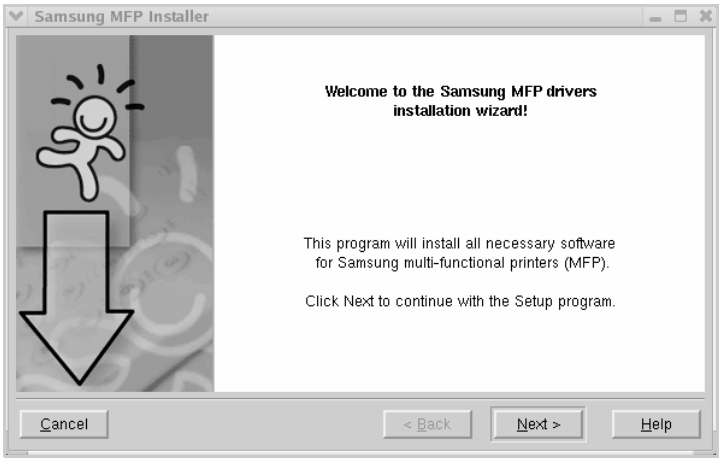

6 When the installation is complete, click **Finish**.

The installation program has added the MFP Configurator desktop icon and Samsung MFP group to the system menu for your convenience. If you have any difficulties, consult the onscreen help that is available through your system menu or can otherwise be called from the driver package windows applications, such as MFP Configurator or Image Editor.

Uninstalling the MFP Driver

1 When the Administrator Login window appears, type in *root* in the Login field and enter the system password.

NOTE: You must log in as a super user (root) to install the printer software. If you are not a super user, ask your system administrator.

2 Insert the printer software CD-ROM. The CD-ROM will automatically run.

If the CD-ROM does not automatically run, click the icon at the bottom of the desktop. When the Terminal screen appears, type in:

[root@localhost root]#cd /mnt/cdrom/Linux

[root@localhost root]#./install.sh

NOTE: The installation program runs automatically if you have an autorun software package installed and configured.

1 Click **Uninstall**.

2 Click **Next**.

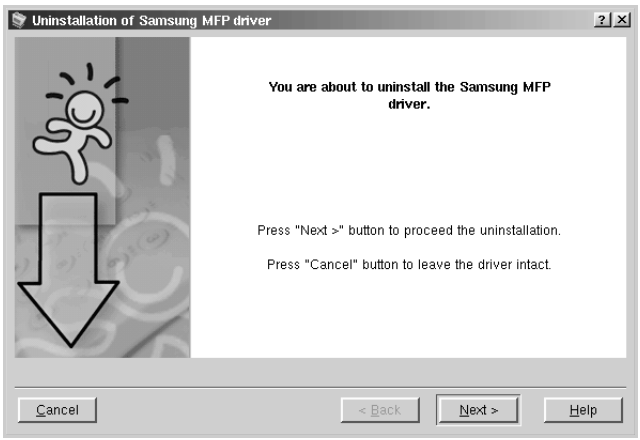

3 Click **Finish**.

Using the MFP Configurator

MFP Configurator is a tool primarily intended for configuring MFP devices. Since an MFP device combines the printer and scanner, the MFP Configurator provides options logically grouped for printer and scanner functions. There is also a special MFP port option responsible for the regulation of access to an MFP printer and scanner via a single I/O channel.

After installing the MFP driver (see page A.3), the MFP Configurator icon will automatically be created on your desktop.

Opening the MFP Configurator

1 Double-click **MFP Configurator** on the desktop.

You can also click the Startup Menu icon and select **Samsung MFP** and then **MFP Configurator**.

2 Press each button on the Modules pane to switch to the corresponding configuration window.

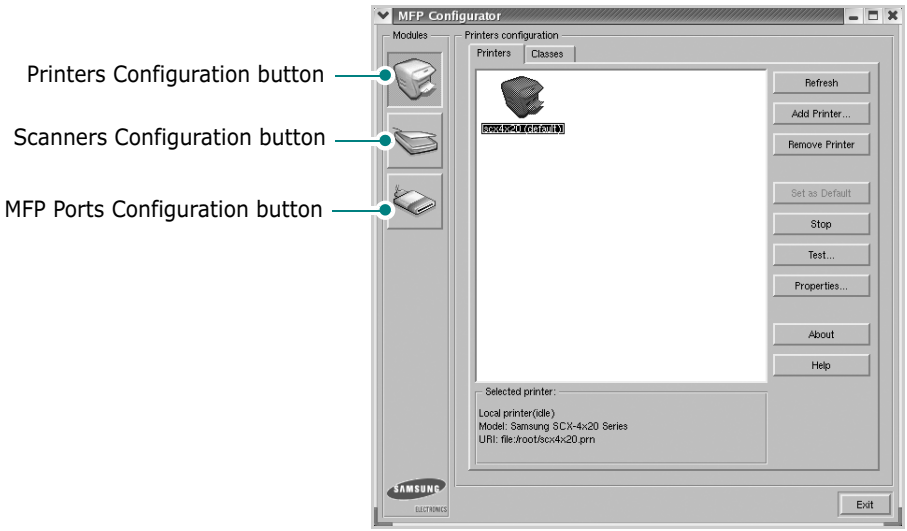

You can use the onscreen help by clicking **Help**.

3 After changing the configurations, click **Exit** to close the MFP Configurator.

Printers Configuration

Printers configuration has the two tabs; **Printers** and **Classes**.

Printers Tab

You can see the current system's printer configuration by clicking on the printer icon button on the left side of the MFP Configurator window.

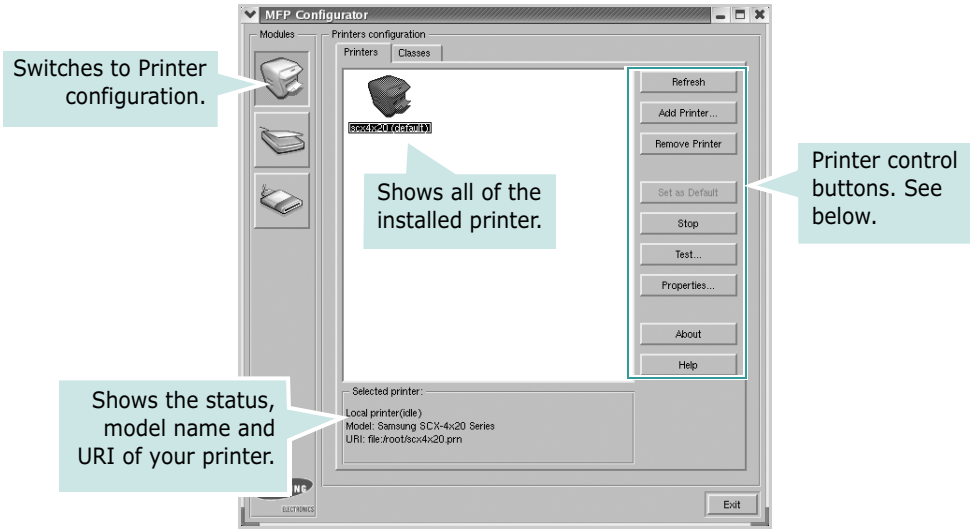

You can use the following printer control buttons:

- **Refresh**: renews the available printers list.
- **Add Printer**: allows you to add a new printer.
- **Remove Printer**: removes the selected printer.
- **Set as Default**: sets the current printer as a default printer.
- **Stop**/**Start**: stops/starts the printer.
- **Test**: allows you to print a test page to check if the machine is working properly.
- **Properties**: allows you to view and change the printer properties. For details, see page A.11.

Classes Tab

The Classes tab shows a list of available printer classes.

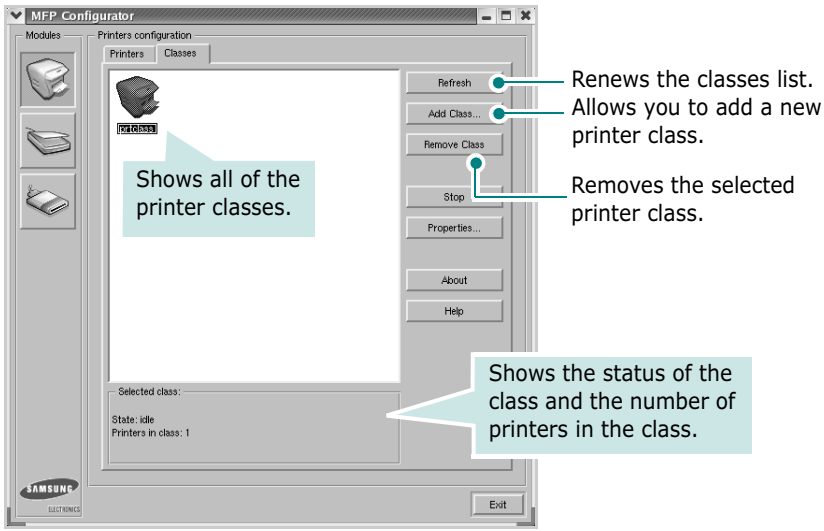

Scanners Configuration

In this window, you can monitor the activity of scanner devices, view a list of installed Samsung MFP devices, change device properties, and scan images.

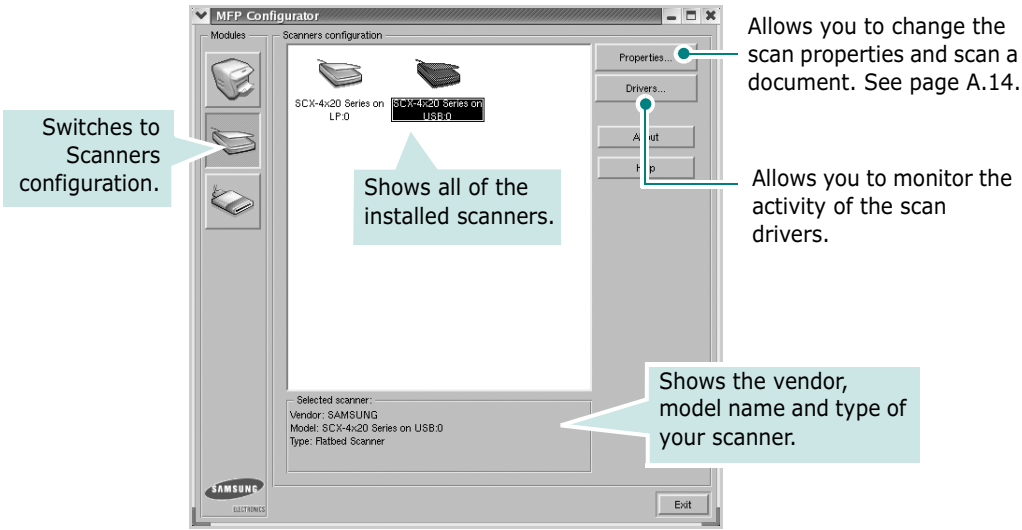

MFP Ports Configuration

In this window, you can view the list of available MFP ports, check the status of each port and release a port that is stalled in busy state when its owner is terminated for any reason.

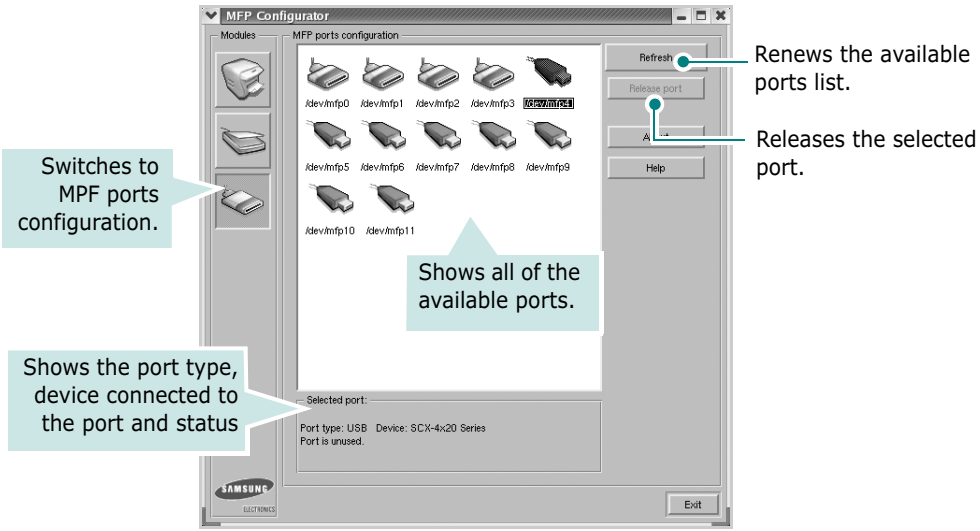

Sharing Ports Between Printers and Scanners

Your machine may be connected to a host computer via the parallel port or USB port. Since the MFP device contains more than one device (printer and scanner), it is necessary to organize proper access of “consumer” applications to these devices via the single I/O port.

The Samsung MFP driver package provides an appropriate port sharing mechanism that is used by Samsung printer and scanner drivers. The drivers address their devices via so-called MFP ports. The current status of any MFP port can be viewed via the MFP Ports Configuration. The port sharing prevents you from accessing one functional block of the MFP device, while another block is in use.

When you install a new MFP printer onto your system, it is strongly recommended you do this with the assistance of an MFP Configurator. In this case you will be asked to choose I/O port for the new device. This choice will provide the most suitable configuration for MFP’s functionality. For MFP scanners I/O ports are being chosen by scanner drivers automatically, so proper settings are applied by default.

Configuring Printer Properties

Using the properties window provided by the Printers configuration, you can change the various properties for your machine as a printer.

1 Open the MFP Configurator.

If necessary, switch to Printers configuration.

2 Select your machine on the available printers list and click **Properties**.

3 The Printer Properties window opens.

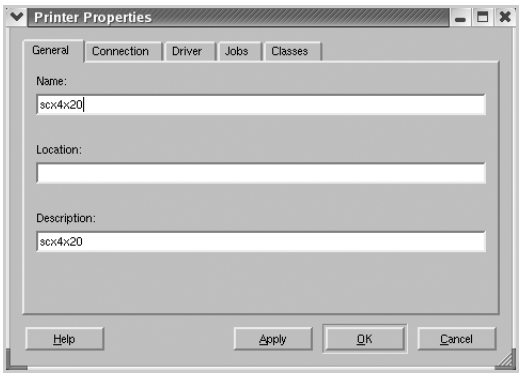

The following five tabs display at the top of the window:

- **General**: allows you to change the printer location and name. The name entered in this tab displays on the printer list in Printers configuration.
- **Connection**: allows you to view or select another port. If you change the printer port from USB to parallel or vice versa while in use, you must re-configure the printer port in this tab.
- **Driver**: allows you to view or select another printer driver. By clicking **Options**, you can set the default device options.
- **Jobs**: shows the list of print jobs. Click **Cancel job** to cancel the selected job and select the **Show completed jobs** check box to see previous jobs on the job list.
- **Classes**: shows the class that your printer is in. Click **Add to Class** to add your printer to a specific class or click **Remove from Class** to remove the printer from the selected class.

4 Click **OK** to apply the changes and close the Printer Properties Window.

Printing a Document

Printing from Applications

There are a lot of Linux applications that you are allowed to print from using Common UNIX Printing System (CUPS). You can print on your machine from any such application.

1 From the application you are using, select **Print** from the **File** menu.

2 Select **Print** directly using **lpr**.

3 In the Samsung LPR window, select the model name of your machine from the Printer list and click **Properties**.

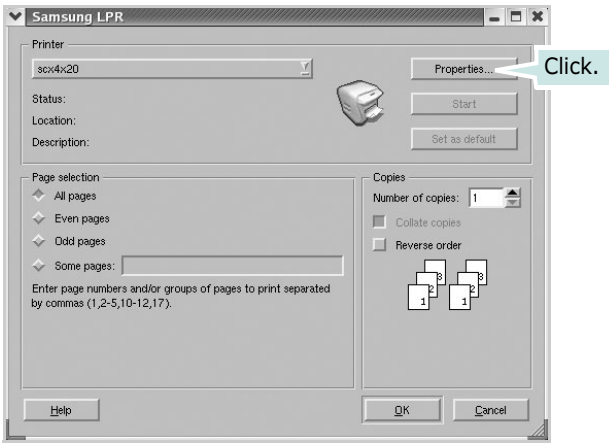

4 Change the printer and print job properties.

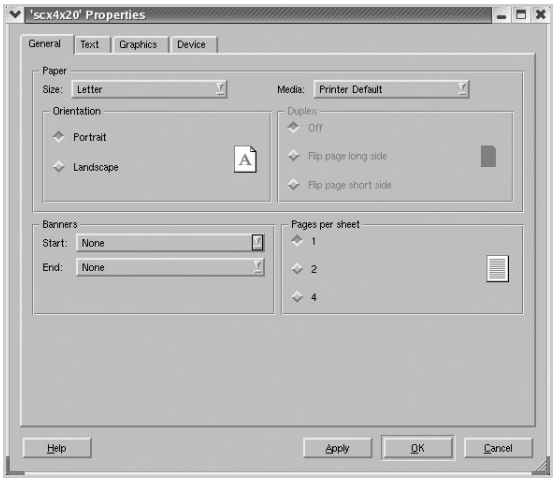

The following four tabs display at the top of the window.

- **General** - allows you to change the paper size, the paper type, and the orientation of the documents, enables the duplex feature, adds start and end banners, and changes the number of pages per sheet.
- **Text** - allows you to specify the page margins and set the text options, such as spacing or columns.
- **Graphics** - allows you to set image options that are used when printing images/files, such as color options, image size, or image position.
- **Device**: allows you to set the print resolution, paper source, and destination.

5 Click **OK** to apply the changes and close the scx4x20 Properties window.

6 Click **OK** in the Samsung LPR window to start printing.

7 The Printing window appears, allowing you to monitor the status of your print job.

To abort the current job, click **Cancel**.

Printing Files

You can print many different types of files on the Samsung MFP device using the standard CUPS way - directly from the command line interface. The CUPS lpr utility allows you do that. But the drivers package replaces the standard lpr tool by a much more user-friendly Samsung LPR program.

To print any document file:

1 Type *lpr <file_name>* from the Linux shell command line and press **Enter**. The Samsung LPR window appears.

When you type only *lpr* and press **Enter**, the Select file(s) to print window appears first. Just select any files you want to print and click **Open**.

2 In the Samsung LPR window, select your printer from the list, and change the printer and print job properties.

For details about the properties window, see page A.11.

3 Click **OK** to start printing.

Scanning a Document

You can scan a document using the MFP Configurator window.

1 Double-click the MFP Configurator on your desktop.

2 Click the button to switch to Scanners Configuration.

3 Select the scanner on the list.

When you have only one MFP device and it is connected to the computer and turned on, your scanner appears on the list and is automatically selected.

If you have two or more scanners attached to your computer, you can select any scanner to work at any time. For example, while acquisition is in progress on the first scanner, you may select the second scanner, set the device options and start the image acquisition simultaneously.

NOTE: The scanner name shown in Scanners configuration can be different from the device name.

4 Click **Properties**.

5 Load the document to be scanned face up into the ADF (Automatic Document Feeder) or face down on the document glass. For details, see page 7.6.

For detailed guidelines for preparing an original document, see page 5.3.

6 Click **Preview** in the Scanner Properties window.

The document is scanned and the image preview appears in the Preview Pane.

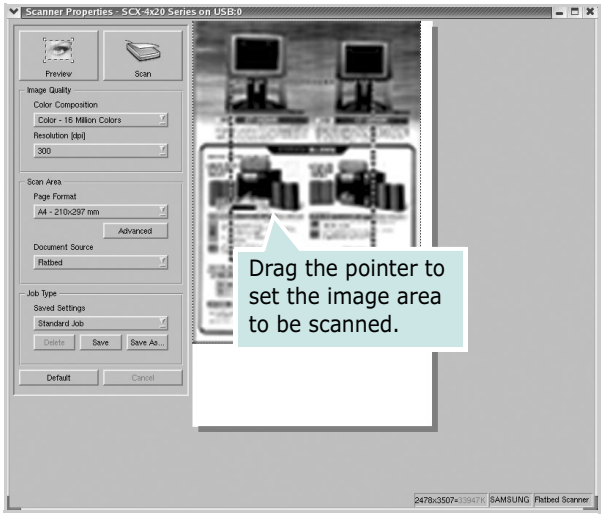

7 Change the scan options in the Image Quality and Scan Area sections.

- **Image Quality**: allows you to select the color composition and the scan resolution for the image.
- **Scan Area**: allows you to select the page size. The **Advanced** button enables you to set the page size manually.

If you want to use one of the preset scan option settings, select from the Job Type drop-down list. For details about the preset Job Type settings, see page A.16.

You can restore the default setting for the scan options by clicking **Default**.

8 When you have finished, click **Scan** to start scanning.

The status bar appears on the bottom left of the window to show you the progress of the scan. To cancel scanning, click **Cancel**.

9 The scanned image appears in the new Image Editor window.

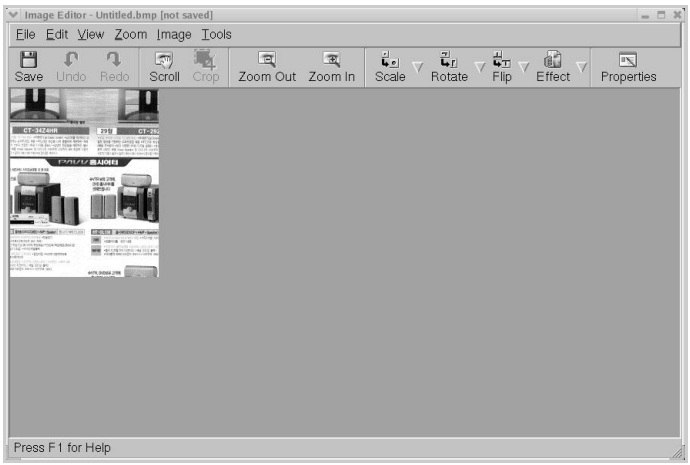

If you want to edit the scanned image, use the toolbar. For further details about editing an image, see page A.17.

10 When you are finished, click **Save** on the toolbar.

11 Select the file directory where you want to save the image and enter the file name.

12 Click **Save**.

Adding Job Type Settings

You can save your scan option settings to retrieve for a later scanning.

To save a new Job Type setting:

1 Change the options from the Scanner Properties window.

2 Click **Save As**.

3 Enter the name for your setting.

4 Click **OK**.

Your setting is added to the Saved Settings drop-down list.

To save a Job Type setting for the next scan job:

1 Select the setting you want to use from the Job Type drop-down list.

2 Click **Save**.

The next time you open the Scanner Properties window, the saved setting is automatically selected for the scan job.

To delete a Job Type setting:

1 Select the setting you want to delete from the Job Type drop-down list.

2 Click **Delete**.

The setting is deleted from the list

Using the Image Editor

The Image Editor window provides you with menu commands and tools to edit your scanned image.

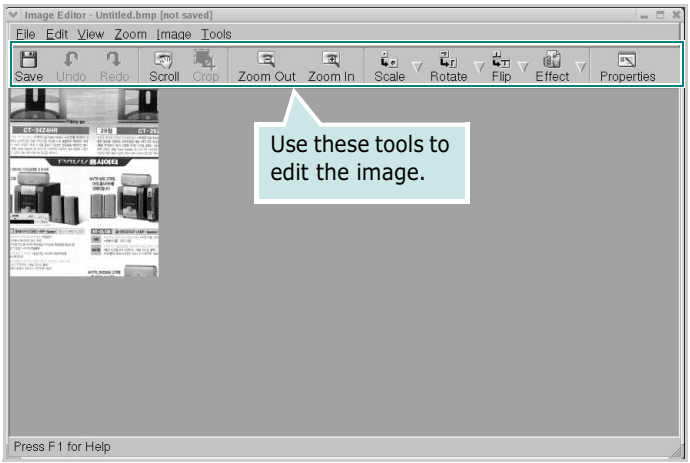

You can use the following tools to edit the image:

Tools	Function
Save	Saves the image.

Tools	Function
Undo	Cancels your last action.
Redo	Restores the action you canceled.
Scroll	Allows you to scroll through the image.
Crop	Crops the selected image area.
Zoom Out	Zooms the image out.
Zoom In	Zooms the image in.
Scale	Allows you to scale the image size; you can enter the size manually, or set the rate to scale proportionally, vertically or horizontally.
Rotate	Allows you to rotate the image; you can select the number of degrees from the drop-down list.
Flip	Allows you to flip the image vertically or horizontally.
Effect	Allows you to adjust the brightness or contrast of the image, or to invert the image.
Properties	Shows the properties of the image.

For further details about the Image Editor program, refer to the onscreen help.

B Using Your Machine on a Network

If you work in a networked environment, the machine can be shared by other users on the network.

This chapter includes:

- **About Sharing the Machine on a Network**
- **Setting Up a Locally-Shared Machine**
- **Setting Up a Network-Connected Machine**

Note: Before using your machine on a network, you need to install an optional network interface card. For more information, Appendix C, "Installing a Network Interface Card".

About Sharing the Machine on a Network

If you work in a networked environment, you can connect your machine to the network.

Locally-Shared Machine

You can connect the machine directly to a selected computer, which is called the "host computer" on the network. The machine can then be shared by other users on the network through a Windows 9x/Me/NT 4.0/2000/XP network printer connection.

Wired Network-connected Machine

To use the machine as a network printer, you need to install an optional network interface card in your machine. See page C.6 for information about installing the card.

Wireless Network-connected Machine

To use your machine in a wireless network environment, you need to install an optional wired/wireless network interface card in your machine. See page C.6.

Printing Across a Network

Whether the machine is locally-connected or network-connected, you need to install the SCX-4x20 series printer software on each computer that prints documents using the machine.

Setting Up a Locally-Shared Machine

In Windows 95/98/Me

Setting Up the Host Computer

1. Start Windows.
2. From the **Start** menu, select **Control Panel** from **Settings** and double-click on the **Network** icon.
3. Check the **File and Print Sharing** box, and click **OK**. Close the window.
4. From the **Start** menu, select **Printers** from **Settings** and double-click your machine name.
5. Select **Properties** in the **Printer** menu.
6. Click the **Sharing** tab and check the **Shared As** box. Fill in the **Shared Name** field and click **OK**.

Setting Up the Client Computer

1. Right-click the Windows **Start** button and select **Explorer**.
2. Open your network folder in the left column.
3. Right-click the shared name and select **Capture Printer Port**.
4. Select the port you want, check the **Reconnect at log on box**, and click **OK**.
5. From the **Start** menu, select **Settings** and then **Printers**.
6. Double-click your machine icon.
7. From the **Printer** menu, select **Properties**.
8. From the **Details** tab, select the printer port and click **OK**.

In Windows NT 4.0/2000/XP

Setting Up the Host Computer

1. Start Windows.
2. For Windows NT 4.0/2000, from the **Start** menu, select **Settings** and then **Printers**.

   For Windows XP, from the **Start** menu, select **Printers and Faxes**.
3. Double-click your machine icon.
4. From the **Printer** menu, select **Sharing**.
5. For Windows NT 4.0, check the **Shared** box.

   For Windows 2000, check the **Shared As** box.

   For Windows XP, check the **Share this printer** box.
6. Fill in the **Shared Name** field and click **OK**.

Setting Up the Client Computer

1. Right-click the Windows **Start** button and select **Explorer**.
2. Open your network folder in the left column.
3. Click the shared name.
4. For Windows NT 4.0/2000, from the **Start** menu, select **Settings** and **Printers**.

   For Windows XP, from the **Start** menu, select **Printers and Faxes**.
5. Double-click your machine icon.
6. From the **Printer** menu, select **Properties**.
7. From the **Ports** tab, click **Add Port**.
8. Select **Local port** and click **New Port**.

9 In the **Enter a port name** field, enter the shared name.

10 Click **OK** and click **Close**.

11 For Windows NT 4.0, click **OK**.

For Windows 2000/XP, click **Apply** and click **OK**.

B

Setting Up a Network-Connected Machine

You have to set up the network protocols on the machine to use it as your network printer. Setting protocols can be accomplished by using the supplied network program. Please refer to the SyncThru User's Guide.

You can configure the basic network parameters through the machine's control panel. Use the machine's control panel to do the following:

- Print a Network Configuration Page
- Enable or disable network protocols (IPX/SPX)
- Configure TCP/IP
- Configure IPX frame types

Configuring Network Parameters on the Control Panel

Supported Operating Systems

NOTE: The operating systems supported by the network card may be different from the operating systems supported by the machine. The following table shows the network environment supported by the machine.

Item	Requirements
Network Interface	10/100 Base-TX or 802.11b Wireless LAN

Item	Requirements
Network Operating System	• Novell Netware 4.x, 5.x, 6.x • Windows 95/98/Me/NT 4.0/2000/XP • Unix AT&T, BSD4.3, HP-UX, SUN OS, SOLARIS, SCO • Various Linux OS
Network Protocols	• Netware IPX/SPX • TCP/IP, DLC/LLC on Windows • Port9100 on Unix, Linux
Dynamic Addressing Server	DHCP, BOOTP

• IPX/SPX: Internet Packet eXchange/Sequenced Packet eXchange
• TCP/IP: Transmission Control Protocol/Internet Protocol
• DLC/LLC: Data Link Control/Logical Link Control
• DHCP: Dynamic Host Configuration Protocol
• BOOTP: Bootstrap Protocol

Printing a Network Configuration Page

The Network Configuration page shows how the network interface card on your machine is configured. The default settings which are suitable for most applications are enabled.

1. Press **Menu** until you see “Network Setup” on the top line of the display.

2. Press the scroll button (◀ or ▶) until “Print Net CFG” displays on the bottom line.

3. Press **Enter**.

   The first available menu item, “Yes,” displays on the bottom line.

4. Press **Enter**.

   The Network Configuration page prints out.

Setting Network Protocols

When you first install the machine, all supported network protocols are enabled when you turn the machine on. If a network protocol is enabled, the machine may actively transmit on the network even when the protocol is not in use. This may increase network traffic slightly. To eliminate unnecessary traffic, you can disable unused protocols.

1. Press **Menu** until you see "Network Setup" on the top line of the display.

2. Press the scroll button (◀ or ▶) until "Config Network" displays on the bottom line.

3. Press **Enter** to access the menu.

4. Press the scroll button (◀ or ▶) until you see the desired protocol on the bottom line.

5. Press **Enter**.

   If you selected "TCP/IP," assign a TCP/IP address. For details, see page B.8.

   If you selected "Netware," set the frame type format. For details, see page B.10.

6. Press **Enter** to save the selection.

7. Press **Stop/Clear** to return to Standby mode.

Configuring TCP/IP

Your machine can be set up on a variety of TCP/IP networks. There are several ways in which your machine can be assigned a TCP/IP address, depending on your network.

- Static Addressing: TCP/IP address is assigned manually by the system administrator.
- Dynamic Addressing BOOTP/DHCP (default): TCP/IP address is assigned automatically by the server.

Static Addressing

To enter the TCP/IP address from your machine's control panel, take the following steps:

1. Press **Menu** until you see "Network Setup" on the top line of the display.

2. Press the scroll button (◀ or ▶) until "Config Network" displays on the bottom line.

3. Press **Enter** to access the menu.

   The first available menu item, "TCP/IP," appears on the bottom line.

4. Press **Enter**.

   The first available menu item, "Manual," appears on the bottom line.

5. Press **Enter**.

   The first available menu item, "IP Address," displays on the bottom line.

6. Press **Enter** to access the IP Address menu.

   An IP address consists of 4 bytes.

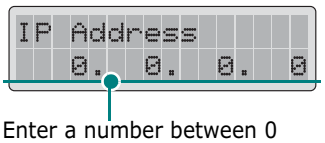

Enter a number between 0 and 255 for each byte.

7 Press the scroll button (◀ or ▶) to enter a number between 0 and 255 and press **Enter** or **Upper Level** to move between bytes.

For the SCX-4720F, you can enter a number using the number keypad and use the scroll button (◀ or ▶) to move between bytes.

8 Repeat step 7 to complete the address from the 1st byte to the 4th byte.

9 Press **Enter**.

10 To select other parameters, such as Subnet Mask or Gateway, press the scroll button (◀ or ▶) until the desired item displays on the bottom line. Press **Enter**.

11 Repeat steps 7 through 9 to configure the other TCP/IP parameters.

12 Press **Stop/Clear** to return to Standby mode.

Dynamic Addressing (BOOTP/DHCP)

To have the TCP/IP address assigned automatically by the server, take the following steps:

1 Press **Menu** until you see "Network Setup" on the top line of the display.

2 Press the scroll button (◀ or ▶) until "Config Network" appears on the bottom line.

3 Press **Enter**.

The first available menu item, "TCP/IP," appears on the bottom line.

4 Press the scroll button (◀ or ▶) to display "DHCP" on the bottom line and press **Enter**.

5 To assign the address from the BOOTP server, press **Enter** when "BOOTP" displays on the bottom line.

Configuring IPX Frame Types

On IPX/SPX protocol networks (for example, Novell NetWare), the format of the network communication frames must be specified for the machine. In most cases, you can keep the 'Auto' default setting. However, you can manually set the frame type format, if required.

- **Off**: The IPX/SPX protocol is disabled.
- **Auto** (default): Automatically senses and limits the frame type to the first one detected.
- **Enable 802.3**: Limits the frame type to IPX over IEEE 802.3 frames. All others will be discarded.
- **Ethernet II**: Limits the frame type to IPX over Ethernet Frames. All others will be discarded.
- **Enable 802.2**: Limits the frame type to IPX over IEEE 802.2 with IEEE 802.3 frames. All others will be discarded.
- **Enable SNAP**: Limits the frame type to IPX over SNAP with IEEE 802.3 frames. All others will be discarded.

Take the following steps to change the frame type format:

1. Press **Menu** until you see "Network Setup" on the top line of the display.
2. Press the scroll button (◀ or ▶) until "Config Network" displays on the bottom line.
3. Press **Enter** to access the menu.
4. Press the scroll button (◀ or ▶) until "Netware" displays on the bottom line. Press **Enter**.

   The first available menu item, "Off," displays on the bottom line.
5. Press the scroll button (◀ or ▶) until you see the desired frame type and press **Enter**.
6. Press the **Stop/Clear** to return to Standby mode.

Restoring the Network Configuration

You can return the network configuration to its default settings.

1. Press **Menu** until you see "Network Setup" on the top line of the display.

2. Press the scroll button (◀ or ▶) until "Set To Default" displays on the bottom line.

3. Press **Enter**.

   The first available menu item, "Yes," displays on the bottom line.

4. Press **Enter** to restore the network configuration.

5. Power the machine off and back on, or reset the network interface card.

Resetting the Network Interface Card

You can reset the network interface card when a network problems occurs.

1. Press **Menu** until you see "Network Setup" on the top line of the display.

   The first available item, "Reset Network," displays on the bottom line.

2. Press **Enter**.

   The first available menu item, "Yes," displays on the bottom line.

3. Press **Enter** to reset the network interface card.

Configuring the Wireless Network

See the instructions supplied with the optional Wireless Network interface card.

Configure the Wireless Network environments.

You can easily configure the Wireless Network environments using the SetIP program in Windows. See Wireless Network User's Guide.

To Configure the Wireless Network Settings:

1. Press **Menu** until you see "Network Setup" on the top line of the display.

2. Press the scroll button (◀ or ▶) until "Config Network" displays on the bottom line.

3. Press **Enter** to access the menu.

4. Press the scroll button (◀ or ▶) until "Config 802.11b" displays on the bottom line. Press **Enter**.

You can configure the following items:

- **SSID**: When you select "Search List," the wireless network card on your machine searches for wireless networks in the area and displays the results on a list. Select one from the list. You cannot change "Operation Mode" and "Channel". If you select "Custom" from the list, you can configure the wireless settings according to your needs and enter a name of up to 32 letters for your "Custom" setting. "SSID" is case sensitive, so you need to change it carefully. Using the Scroll buttons, find the alphabet you want and press the **Enter**. When the cursor moves to the next input field, enter the next letters the same as you entered the first letter. After you entered the last letter of the name, press the **Enter** once again to save the ID. The way to enter the key number for the encryption key is the same as entering letters.
- **Operation Mode**: "Ad-hoc" mode allows the wireless devices to communicate directly with each other. This is the default operating mode for the print server.

  If your network uses an Access Point, you must reconfigure the operation mode to "InfraStructure." "InfraStructure" mode allows both wireless and cabled computers to send files to the machine through an Access Point.

  If you select "Auto," the print server selects the operation mode automatically according to the network cable's connection each time it boots up. If a network cable is detected, the print server enters "Ad-hoc" mode; if not, it enters "InfraStructure" mode.
- **Channel**: This option is available in the "Ad-hoc" mode only. In most cases, you will not need to change this setting. The print server will scan all available channels for the specified network and will adapt its channel to the one detected. Default setting is 10.

- **Authentication**: “Open System” or “Shared Key.” The Samsung print server is not configured for network authentication (Open System). If required by your network, the proper authentication method must be configured on the print server.
- **Encryption**: No data Encryption, 64 bits, or 128 bits. Default setting is No data Encryption. If your network uses WEP encryption keys, you must configure the encryption keys. You can configure up to four keys. The active key must match the value and active key position (for example, Key 1) configured on other wireless devices.

  - **Using Key**: Select the key to use in your network.

  - **Key Type**: Select the key type of your network.

  - **Key 1**, **Key 2**, **Key 3**, **Key 4**: Enter the key number for “Encryption.” The numbers you can enter are as follows:

	Hexadecimal	Alphanumeric
64-bit WEP	10 digits	5 characters
128-bit WEP	26digits	13 characters

MEMO

C Installing Machine Options

Your machine is a full-featured laser printer that has been optimized to meet most of your printing needs. Recognizing that each user may have different requirements, however, Samsung makes several options available to enhance your machine's capabilities.

This chapter includes:

- **Installing Memory DIMM**
- **Installing a Network Interface Card**
- **Installing an Optional Tray**

Installing Memory DIMM

Your machine has dual in-line memory module (DIMM) slot. Use this DIMM slot to install more memory option for the machine.

NOTE: Your machine has 32 MB of memory which can be expanded to 160 MB. Use only a Samsung-approved DIMM, part number ML-00MC (64 MB), or ML-00MD (128 MB). Contact your Samsung dealer.

CAUTION: Static electricity can damage DIMMs. When handling a DIMM, either wear an antistatic wrist strap, or frequently touch the surface of the DIMM antistatic package and then touch bare metal on the machine.

1. Turn the machine off and unplug all cables from the machine.

2. Hold the control board cover and remove it.

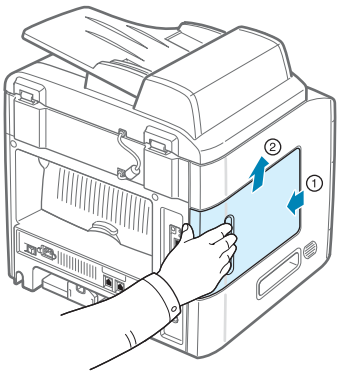

3 Locate the memory DIMM slot on the control board. They are not interchangeable.

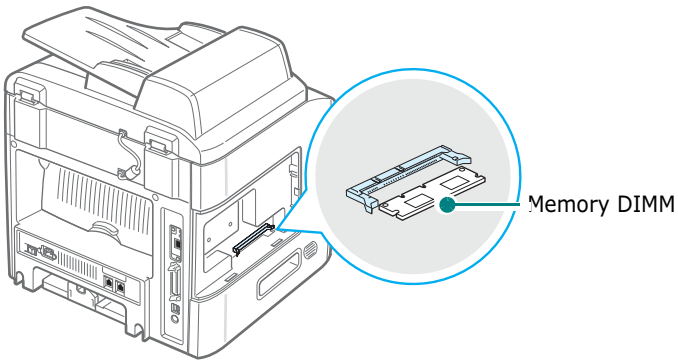

4 Open the latch on each side of the DIMM slot all the way.

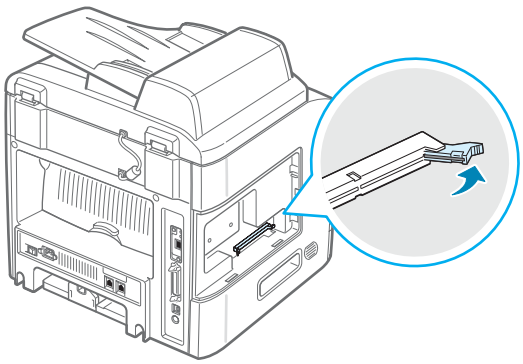

5 Remove the memory DIMM from the antistatic package. Locate the alignment notches on the bottom edge of each DIMM.

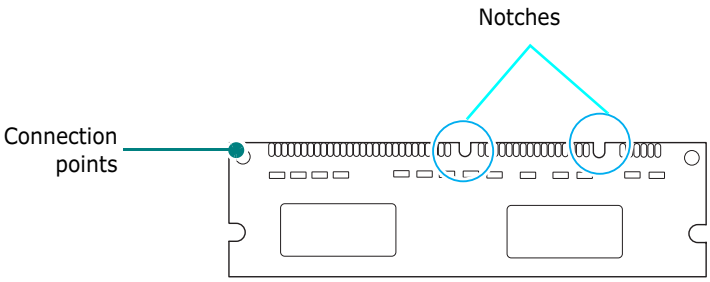

6 Holding the memory DIMM by the edges, align the notches on the memory DIMM with the grooves at the top of the memory DIMM slot.

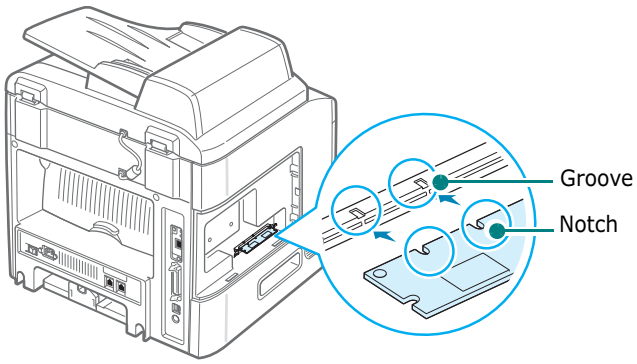

7 Push the DIMM straight into the DIMM slot until it snaps into place. Make sure the latches fit over the notches located on either side of the DIMM.

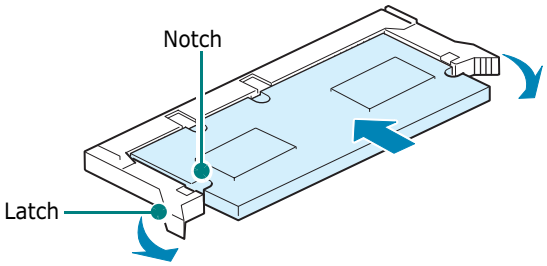

8 Replace the control board cover.

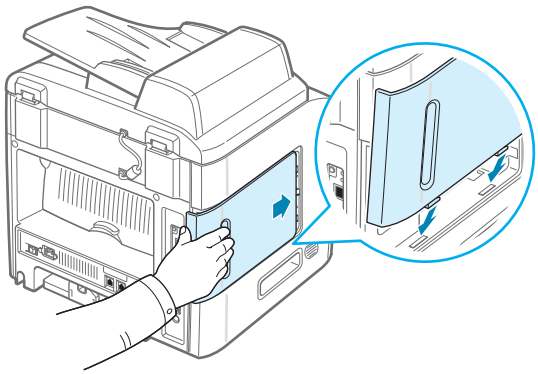

9 Reconnect the power cord and printer cable, and turn the machine on.

Removing the Memory DIMM

1 Follow steps 1 through 2 on page C.2 to access the control board.

2 Push the latches at both end of the DIMM slot away from the DIMM. Pull out the DIMM.

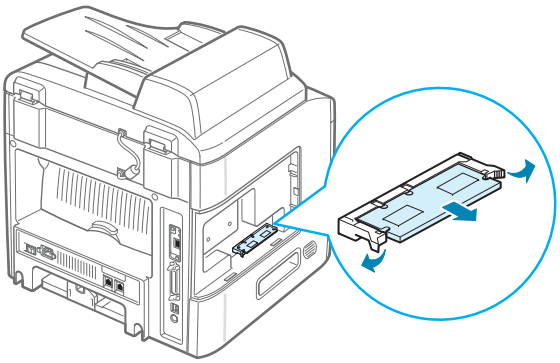

3 Place the DIMM in its original packaging or wrap it with a sheet of metal as thin as paper, such as aluminium foil, and store it in a box.

4 Follow from step 8 on page C.4.

Installing a Network Interface Card

NOTE: When you purchase the wired/wireless network interface card, the antenna connected to the card may not be separated from the card, depending on your country.

To use your machine on a network, your machine must be equipped with an optional network interface card.

If you want to use the machine in both wired and wireless network environments, you need to install an optional wired/wireless network interface card.

Check if there are missing parts in your optional interface card package.

Network Card options	
Ethernet 10/100 Base TX (Internal)	Ethernet 10/100 Base TX + 802.11b Wireless LAN (Internal)
Order number: ML-00NC	Order number: ML-00LC
Network interface Card, SyncThru CD-ROM and SyncThru Quick Guide 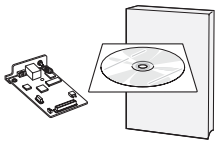	Wireless Network interface Card, SyncThru CD-ROM, SyncThru Quick Guide and Wireless Quick Guide 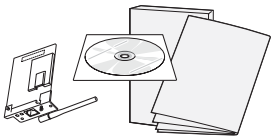

1 Turn the machine power off and unplug all cables from the machine.

2 Hold the control board cover and remove it.

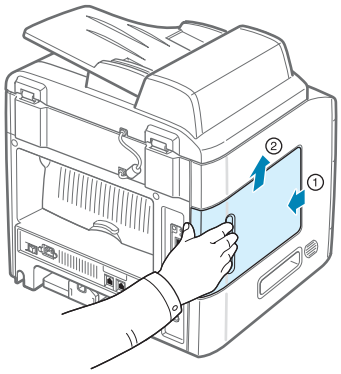

3 Remove the two screws and the bracket from the control board. You can discard the old bracket.

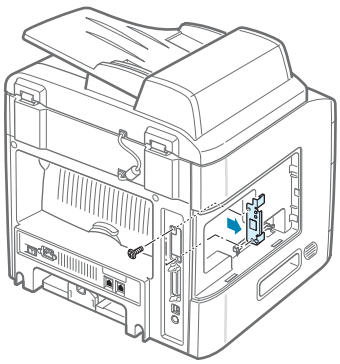

If you are replacing an existing network interface card with a new one:

① Remove the two screws.

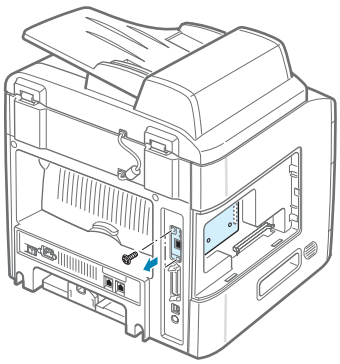

② Reach in and grasp the network interface card by the left side corners. Gently pull on the card until it disengages.

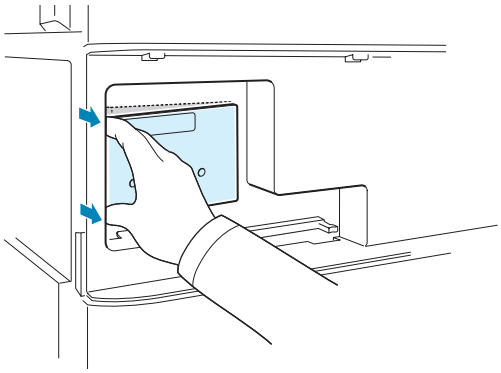

③ Move your hand to the center of the card and carefully maneuver it out of the machine.

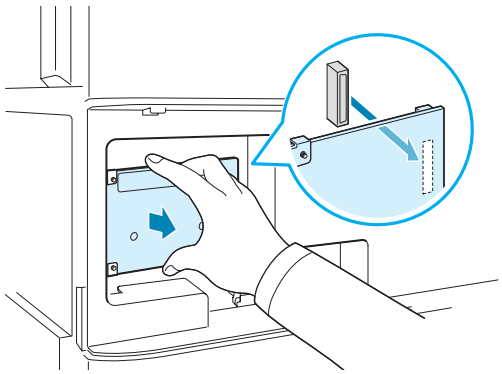

4 Align the connector on the network interface card with the connector on the control board. Make sure that the jacks on the card go through the holes. Push the card firmly into the connector on the control board until it is completely and securely in place.

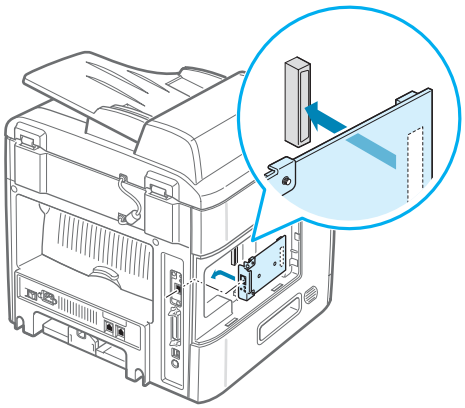

5 Tighten the two screws.

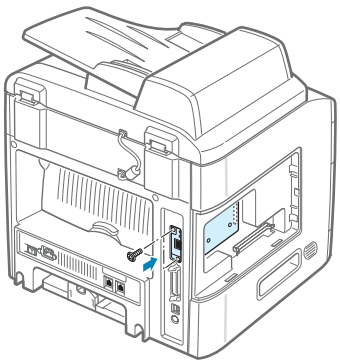

6 Replace the control board cover.

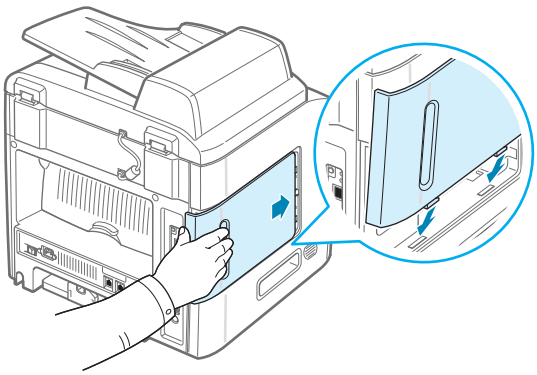

7 Plug one end of the Ethernet cable (UTP cable with RJ.45 connector) into the Ethernet network port on the machine and the other end of the cable into a network LAN connection.

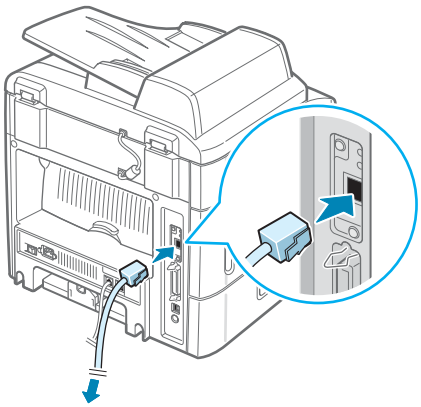

8 Reconnect the power cord and turn the machine on.

NOTE: For information about configuring and using the machine in a network environment, refer to the User's Guide provided with the network interface card. You can also configure the network parameters using the control panel; see page B.5.

Installing an Optional Tray

You can increase the paper handling capacity of your machine by installing an optional Tray 2. This tray holds 250 sheets of paper.

1. Turn the machine off and unplug all cables from the machine.

2. Remove the packing material from the tray and remove the tape fixing the interface cable to the tray.

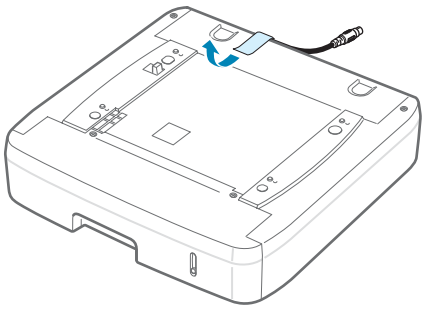

3. Find the location of the connector and the optional tray positioners.

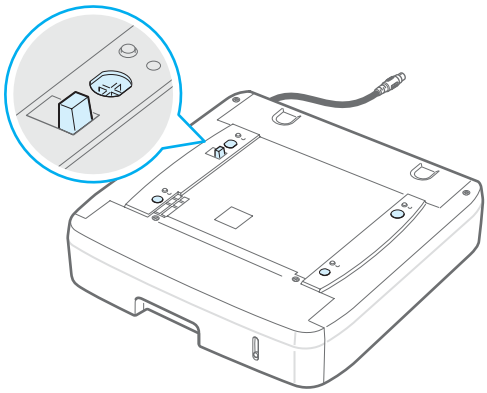

4 Place the machine over the tray, aligning the feet on the machine with the positioners in the tray.

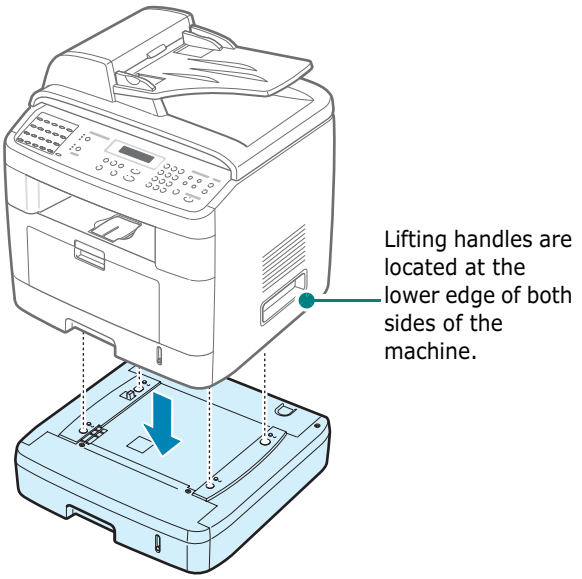

5 Plug the interface cable of the tray into the connector on the back of the machine.

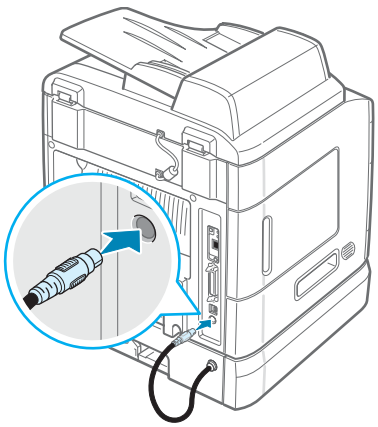

6 Load paper in the tray. The instructions for loading paper in this tray are the same as for loading the standard paper tray. See page 2.7.

7 After loading paper, you need to set the paper type and size for Tray 2. See page 2.20.

8 Reconnect the power cord and cables and then turn the machine on.

Setting Tray 2 in the Printer Properties

If you installed Tray 2 with your machine on, the machine does not recognize it. In this case, you need to set the tray in the printer properties window so that you can use it for PC printing. The procedure for setting the tray may differ depending on the selected printer driver.

To set the tray in the printer properties of the PCL 6 printer driver:

1. Click the Windows **Start** menu.
2. For Windows 95/98/Me/NT 4.0/2000, select **Settings** and then **Printers**.

   For Windows XP, select **Printers and Faxes**.
3. Select the **Samsung SCX-4x20 Series PCL 6** machine icon.
4. Click the right mouse button on the machine icon and select **Properties**.
5. Click the **Printer** tab, and select **Tray 2** from the **Optional Tray** drop-down list.

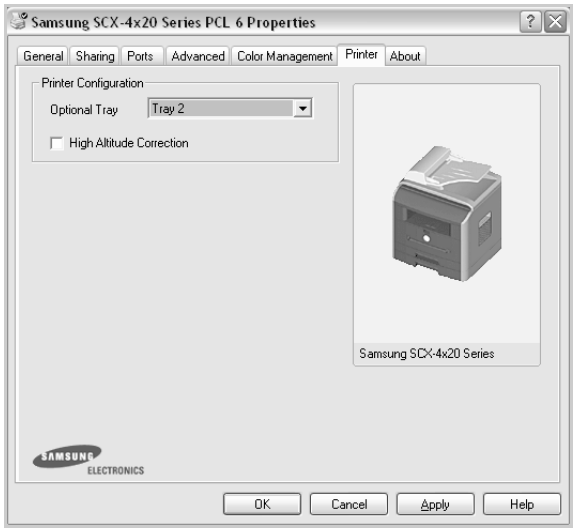

6. Click **OK**.

D SPECIFICATIONS

This chapter includes:

- **General Specifications**
- **Scanner and Copier Specifications**
- **Printer Specifications**
- **Facsimile Specifications (For the SCX-4720F)**
- **Paper Specifications**

General Specifications

Item	Description
Automatic document feeder	Up to 50 sheets (20 lb, 75 g/m^2)
ADF document size	Width: 148 to 216 mm (5.8 to 8.5 inches) Length: 127 to 356 mm (5 to 14 inches)
Paper input capacity	Paper tray (standard Tray 1 and optional Tray 2): 250 sheets (weight: 75 g/m^2, 20 lb) Multipurpose tray: 50 sheets for plain paper (weight: 75 g/m^2, 20 lb), 5 sheets for card stock, labels, transparencies, and envelopes
Paper output capacity	Front output tray: 150 sheets (face down) Rear output slot: 1 sheet (face up)
Paper type	Paper tray: Plain paper (60 ~ 90 g/m^2, 16 ~ 24 lb) Multipurpose tray: Plain paper, Transparencies, Labels, Card, Post card, Envelopes (60 ~ 120 g/m^2, 16 ~ 32 lb)
Consumables	1-piece toner cartridge system
Power requirements	100 ~ 127 VAC, 50/60 Hz, 5.0 A 220 ~ 240 VAC, 50/60 Hz, 2.6 A
Power consumption	Sleep mode: 19 W Average: 400 W
Noise*	Standby mode: Less than 37 dBA Printing: Less than 51 dBA
Warm-up time	Less than 30 seconds
Operating conditions	Temperature: 50 °F to 89 °F (10 °C to 32 °C) Humidity: 20 % to 80 % RH
LCD	16 characters x 2 lines
Toner cartridge life**	5,000 pages (for starter, 3,000 pages) @ ISO 5 % coverage
SET dimension (W x D x H)	450 x 435 x 457 mm
Weight	Net: 13 Kg (including consumables) Gross: 21 Kg (including consumables, accessories and package)

Item	Description
Package weight	Paper: 2.7 Kg Plastic: 0.7 Kg
Duty cycle (Monthly)	Print: Up to 30,000 pages Scan: Up to 4,000 pages ADF: Up to 2,000 pages

**Sound Pressure Level, ISO7779*
***The number of pages may be affected by operating environment, printing interval, media type, and media size.*

Scanner and Copier Specifications

Item	Description
Compatibility	TWAIN standard
Scanning method	ADF and Flat-bed Color CCD (Charge Coupled Device) module
Resolution	Optical: 600 x 1200 dpi (Mono and color) Enhanced: 4,800 x 4,800 dpi (USB)
Effective scanning length	Platen: 293 mm (11.5 in.) ADF: 356 mm (14 in.)
Effective scanning width	Max. 208 mm (8.2 in.)
Color bit depth	24 bit
Mono bit depth	1 bit for Text mode 8 bit for Gray mode
Scan speed	27 seconds (Text mode) 75 seconds (Gray mode) 150 seconds (Color mode)
Copy speed*	Letter: Up to 22 pages per minute A4: Up to 20 pages per minute
Paper size	Letter, A4, Legal, Executive, Folio, A5, A6, B5
Copy resolution	Scan: 600 x 300 (Text, Mixed) / 600 x 600 (Photo) Print: 600 x 600 (Text, Mixed, Photo)
Zoom rate	Platen: 25 ~ 400 % ADF: 25 ~ 100 %

Item	Description
Multiple copies	1-99 pages
Gray scale	256 levels

**Copy Speed is based on Single Document Multiple Copy.*

Printer Specifications

Item	Description
Printing method	Laser Beam Printing
Printing speed*	Letter: Up to 22 PPM (pages per minutes) A4: Up to 20 PPM (pages per minutes)
First printing time	Standby mode: 12 seconds Power save mode: 54 seconds
Paper size	Paper tray: Letter, A4, Legal, Folio, A5, A6 Multipurpose tray: Letter, Legal, A4, Folio, Executive, A5, A6, Envelope 10, Envelope DL, Envelope C5, Envelope C6, JIS B5, Monarch Envelope * Min.: 76 x 127 mm (3 x 5 in.) Max.: 216 x 356 (8.5 x 14 in.)
Printer resolution	600 x 600 dpi (1200 x 600 dpi)
Emulation	PCL 6** Compatible
Printer drivers***	PCL driver: Windows 95/98/2000/NT 4.0/Me/XP, Various Linux OS (USB only)
Memory	32 MB (Max. 160 MB)
	64, 128 MB optional memory available Use only the Samsung-approved DIMM. 64 MB: ML-00MC; 128 MB: ML-00MD
Inteface	IEEE 1284 Parallel, USB 2.0
Options	Ethernet 10/100 Base TX (Internal), Ethernet 10/100 Base TX + 802.11b Wireless LAN (Internal)

**Print speed will be affected by operating system used, computing performance, application software, connecting method, media type, media size, and job complexity.*
***Compatible with PCL6 Version 2.1*
****Please visit www.samsungprinter.com to download the latest software version.*

Facsimile Specifications *(For the SCX-4720F)*

Item	Description
Compatibility	ITU-T Group 3
Applicable line	Public Switched Telephone Network (PSTN) or behind PABX
Data coding	MH/MR/MMR (ECM Mode) and JPEG for color fax transmission
Modem speed	33.6 Kbps
Transmission speed	Approx. 3 seconds/page * Transmission time applies to memory transmission of text data with ECM compression using only ITU-T No.1 Chart.
Maximum document length	Platen: 297 mm ADF: 400 mm
Paper size	Letter, A4, Legal
Resolution	Standard: 203 x 98 dpi Fine: 203 x 196 dpi Super Fine: 300 x 300 dpi / 203 x 392 dpi
User memory	4 MB (320 pages)
Halftone	256 levels
Auto dialer	One-touch dialing (up to 40 numbers) Speed dialing (up to 200 numbers))

Paper Specifications

Overview

Your machine accepts a variety of print materials, such as cut-sheet paper (including up to 100% recycled fiber content paper), envelopes, labels, transparencies and custom-size paper. Properties, such as weight, composition, grain and moisture content, are important factors affecting the machine's performance and the output quality. Paper that does not meet the guidelines outlined in this user's guide can cause the following problems:

- Poor print quality
- Increased paper jams
- Premature wear on the machine.

NOTES:

- Some paper may meet all of the guidelines in this guide and still not produce satisfactory results. This may be the result of improper handling, unacceptable temperature and humidity levels, or other variables over which Samsung has no control.
- Before purchasing large quantities of paper, insure the paper meets the requirements specified in this user's guide.

CAUTION: Using paper that does not meet these specifications may cause problems, requiring repairs. These repairs are not covered by the Samsung warranty or service agreements.

Supported Sizes of Paper

Paper	Dimensions*	Weight	Capacity**
Letter	8.5 X 11 in. (216 X 279 mm)	• 60 to 105 g/m^2 bond (16 to 24 lb) for the paper tray • 60 to 120 g/m^2 bond (16 to 43 lb) for the Multipurpose tray	• 250 sheets of 75 g/m^2 bond (20 lb) paper for the paper tray • 50 sheet of paper for the Multipurpose tray
A4	210 X 297 mm (8.3 X 11.7 in.)		
Executive	7.25 X 10.5 in. (191 X 267 mm)		
Legal	8.5 X 14 in. (216 X 356 mm)		
Folio	216 X 330 mm (8.5 X 13 in.)		

Paper	Dimensions*	Weight	Capacity**
Minimum size (custom)	76 x 127 mm (3 x 5 in)	60 to 120 g/m^2 bond (16 to 32 lb)	5 sheets of paper for the Multipurpose tray
Maximum size (Legal)	216 x 356 mm (8.5 x 14 in)		
Transparency	Same minimum and maximum paper sizes as listed above.	138 to 146 g/m^2	
Labels		120 to 150 g/m^2	
Cards		90 to 163 g/m^2	
Envelopes		75 to 90 g/m^2	

**The machine supports a wide range of media sizes. See "Paper Type, Input Sources, and Capacities" on page 3.2.*
***Capacity may differ depending on media weight, thickness, and environmental conditions.*

NOTE: You may experience jams when using print materials with a length of less than 127 mm (5 in.). For optimum performance, ensure that you are storing and handling the paper correctly. Please refer to "Paper Storage Environment" on page D.9.

Guidelines for Using Paper

For the best result, use conventional 75 g/m^2 (20 lb) paper. Ensure that the paper is of good quality, and free of cuts, nicks, tears, spots, loose particles, dust, wrinkles, voids, and curled or bent edges.

If you are unsure of what type of paper you are loading, such as bond or recycled paper, check the label on the package.

The following problems may cause print quality deviations, jamming or even damage to the machine:

Symptom	Problem with Paper	Solution
Poor print quality or toner adhesion, problems with feeding	Too moist, too rough, too smooth or embossed; faulty paper lot	Try another kind of paper, between 100 ~ 400 Sheffield, 4 ~ 5 % moisture content.
Dropout, jamming, curl	Stored improperly	Store paper flat in its moisture-proof wrapping.
Increased gray background shading/printer wear	Too heavy	Use lighter paper, use the rear output slot.
Excessive curl problems with feeding	Too moist, wrong grain direction or short-grain construction	• Use the rear output slot. • Use long-grain paper.

Symptom	Problem with Paper	Solution
Jamming, damage to machine	Cutouts or perforations	Do not use paper with cutouts or perforations.
Problems with feeding	Ragged edges	Use good quality paper.

NOTES:

- Do not use letterhead paper printed with low-temperature inks, such as those used in some types of thermography.
- Do not use raised or embossed letterhead.
- The machine uses heat and pressure to fuse toner to the paper. Insure that any colored paper or preprinted forms use inks that are compatible with this fusing temperature (200 °C or 392 °F for 0.1 second).

Paper Specifications

Category	Specifications
Acid content	5.5 pH or lower
Caliper	0.094 ~ 0.18 mm (3.0 ~ 7.0 mils)
Curl in ream	Flat within 5 mm (0.02 in.)
Cut edge conditions	Cut with sharp blades with no visible fray.
Fusing compatibility	Must not scorch, melt, offset or release hazardous emissions when heated to 200 °C (392 °F) for 0.1 second.
Grain	Long grain
Moisture content	4 % ~ 6 % by weight
Smoothness	100 ~ 400 Sheffield

Paper Output Capacity

Output Location	Capacity
Face-down output tray	150 sheets of 75 g/m^2 bond (20 lb) paper
Face-up output slot	1 sheet of 75 g/m^2 bond (20 lb) paper

Paper Storage Environment

Paper storage environmental conditions directly affect the feed operation.

Ideally, the machine and paper storage environment should be at or near room temperature, and not too dry or humid. Remember that paper is hygroscopic; it absorbs and loses moisture rapidly.

Heat works with humidity to damage paper. Heat causes the moisture in paper to evaporate, while cold causes it to condense on the sheets. Heating systems and air conditioners remove most of the humidity from a room. As paper is opened and used, it loses moisture, causing streaks and smudging. Humid weather or water coolers can cause the humidity to increase in a room. As paper is opened and used it absorbs any excess moisture, causing light print and dropouts. Also, as paper loses and gains moisture it can become distorted. This can cause paper jams.

Care should be taken not to purchase more paper than can be used in a short time (about 3 months). Paper stored for long periods may experience heat and moisture extremes, which can cause damage. Planning is important to prevent damage to large supplies of paper.

Unopened paper in sealed reams can remain stable for several months before use. Opened packages of paper have more potential for environment damage, especially if they are not wrapped with a moisture-proof barrier.

The paper storage environment should be properly maintained to ensure optimum performance. The required condition is 20 to 24 °C (68 to 75 °F), with a relative humidity of 45 % to 55 %. The following guidelines should be considered when evaluating the paper's storage environment:

- Paper should be stored at or near room temperature.
- The air should not be too dry or too humid.
- The best way to store an opened ream of paper is to rewrap it tightly in its moisture-proof wrapping. If the machine environment is subject to extremes, unwrap only the amount of paper to be used during the day's operation to prevent unwanted moisture changes.

Envelopes

Envelope construction is critical. Envelope fold lines can vary considerably, not only between manufacturers, but also within a box from the same manufacturer. Successful printing on envelopes depends upon the quality of the envelopes. When selecting envelopes, consider the following components:

- Weight: The weight of the envelope paper should not exceed 90g/m^2 (24lb) or jamming may occur.
- Construction: Prior to printing, envelopes should lie flat with less than 6mm (0.25in.) curl, and should not contain air.
- Condition: Envelopes should not be wrinkled, nicked or otherwise damaged.
- Temperature: You should use envelopes that are compatible with the heat and pressure of the machine.

• Size: You should only use envelopes within the following size ranges.

	Minimum	Maximum
Multipurpose tray	76 X 127 mm (3 X 5 in.)	216 X 356 mm (8.5 X 14 in.)

NOTES:

- Use only the manual feeder to print envelopes.
- You may experience some paper jams when using any media with a length less than 140 mm (5.5 in.). This may be caused by paper that has been affected by environmental conditions. For optimum performance, make sure you are storing and handling the paper correctly. Please refer to "Paper Storage Environment" on page D.9.

Envelopes with Double Side Seams

Double side-seams construction has vertical seams at both ends of the envelope rather than diagonal seams. This style may be more likely to wrinkle. Be sure the seam extends all the way to the corner of the envelope as illustrated below.

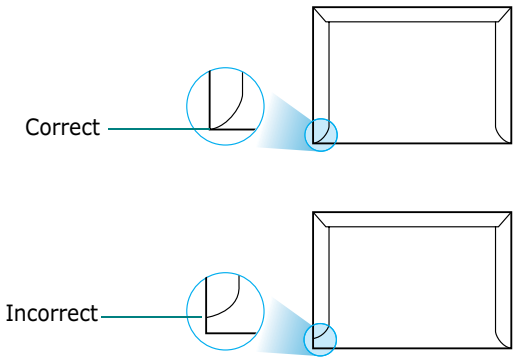

Envelopes with Adhesive Strips or Flaps

Envelopes with a peel-off adhesive strip or with more than one flap that folds over to seal must use adhesives compatible with the heat and pressure in the machine. The extra flaps and strips might cause wrinkling, creasing or even jams and may even damage the fuser.

Envelope Margins

The following gives typical address margins for a commercial #10 or DL envelope.

Type of Address	Minimum	Maximum
Return address	15 mm (0.6 in.)	51 mm (2 in.)
Delivery address	51 mm (2 in.)	90 mm (3.5 in.)

NOTES:

- For the best print quality, position margins no closer than 15 mm (0.6 in.) from the edges of the envelope.
- Avoid printing over the area where the envelope's seams meet.

Envelope Storage

Proper storage of envelopes helps contribute to print quality. Envelopes should be stored flat. If air is trapped in an envelope, creating an air bubble, then the envelope may wrinkle during printing.

Labels

CAUTIONS:

- To avoid damaging the machine, use only labels recommended for laser printers.
- To prevent serious jams, always use the manual feeder to print labels and always use the rear output tray.
- Never print on the same sheet of labels more than once and never print on a partial sheet of labels.

When selecting labels, consider the quality of each component:

- Adhesives: The adhesive material should be stable at 180°C (356°F), the machine's fusing temperature.
- Arrangement: Only use labels with no exposed backing between them. Labels can peel off sheets with spaces between the labels, causing serious jams.
- Curl: Prior to printing, labels must lie flat with no more than 13mm (5in.) of curl in any direction.
- Condition: Do not use labels with wrinkles, bubbles or other indications of separation.

Transparencies

Transparencies used in the machine must be able to withstand 180°C (356°F), the machine's fusing temperature.

CAUTION: To avoid damaging the machine, use only transparencies recommended for use in laser printers.

INDEX

Numerics

2/4-up, special copy 5.12
2-side, special copy 5.11

A

adding documents 7.33
ADF (Automatic Document Feeder), load 5.5, 7.6
ADF rubber pad, replace 8.13
auto fit, special copy 5.11
automatic dialing
    group 7.23
    one-touch 7.19
    speed 7.21
automatic redialing 7.13

B

broadcasting faxes 7.28

C

canceling
    copy 5.5
    fax 7.12
    print 4.3
    scan 6.6, 6.8
    scheduled faxes 7.34
CCD power save mode, use 2.25
characters, enter 2.17
cleaning
    drum 8.11
    inside 8.3
    LSU 8.4
    outside 8.3
    scan unit 8.5
clone, special copy 5.10
collation, special copy 5.10
components 1.5
connection
    AC power 2.14
    Ethernet C.9
    extension phone 2.11
    parallel 2.13
    telephone line cord 2.11
    USB 2.12
consumables 8.12
contrast, copy 5.7
control panel 1.7
copying
    collation 5.10
    contrast 5.7
    default setting, change 5.14
    from ADF 5.5
    from document glass 5.4
    number of pages 5.9
    original type 5.7
    time out, set 5.15

D

date and time, set 2.19
delayed fax 7.29
DIMM
    installing C.2
    removing C.5
display language, change 2.15
document
    jam, clear 9.2
    loading
        ADF 5.5, 7.6
        document glass 5.4, 7.7
    preparing 5.3
document glass
    cleaning 8.5
    loading 7.7
DRPD (Distinctive Ring Pattern Detection) 7.17
drum, clean 8.11

E

error messages 9.12
Ethernet cable, print C.9
extension phone, connect 2.11

F

Favorite setting, use 4.12
fax system, set
    advanced settings 7.38
    basic settings 7.3
fit to page
    copying 5.11
    printing 4.16
front output tray, use 3.10

G

graphic properties, set 4.8
group dial
    dialing 7.25
    editing 7.24
    setting 7.23

H

help, use 4.12

I

image mode 4.8
installing
    Linux software A.3
    Memory C.2
    Network Interface Card C.6
    optional Tray2 C.10
    toner cartridge 2.5
    Windows software 2.28

J

jam, clear
    document 9.2
    paper 9.5

L

Linux
    common problems 9.28
    driver, install A.4
    printer properties A.11
    printing A.12
    scanning A.14
loading, paper
    in the multipurpose tray 3.6
    in the paper tray 2.7
    using the manual feed 3.8

M

machine ID, set 2.16
manual feed mode, use 3.8
memory DIMM
    installing C.2
    removing C.5
memory, clear 8.2
MFP driver, install
    Linux A.4
    Windows
        PCL 6 printer driver 2.28
multipurpose tray, use 3.6

N

network printing
    card, install C.6
    locally shared printer, set B.3
    network-connected printer, set B.5
    parameters, configure B.5
notifying toner low 8.10
n-up (multiple pages per sheet)
    copying 5.12
    printing 4.13

O

one-touch dial
    dialing 7.20
    storing 7.19
option, install
    memory DIMM C.2
    network interface card C.6
    paper tray 2 C.10
orientation, print 4.5, A.13
output location, select 3.10
overlay, use 4.21

P

paper guidelines 3.3
paper jam, clear 9.5
paper level indicator 3.5
paper load
    in manual feeder 3.8
    in paper tray 2.7
    in the multipurpose tray 3.6

paper load capacity 3.2
paper size, set
    paper tray 2.20
    print 4.6, A.13
paper source, set 4.7, A.13
paper type, set
    paper tray 2.20
    print 4.7, A.13
parallel, connect 3.7
poster
    copying 5.13
    printing 4.14
power save mode, use 2.24
print order, set 4.11
print quality problems, solve 9.19
print resolution 4.8, A.13
printer driver, install
    Linux A.4
    Windows
        PCL 6 printer driver 2.28
printer properties
    Linux A.12
    Windows
        PCL 6 printer driver 4.4
Printer Setting Utility
    installing 2.29
    starting 2.37
    tabs 2.38
    uninstalling 2.35
printing
    fitting to a selected paper size 4.16
    from Linux A.12
    from Windows 4.2
    multiple pages on one sheet 4.13
    Phonebook list 7.27
    posters 4.14
    reduced or enlarged document 4.17
    reports 7.36
    using overlays 4.21
    watermarks 4.18
priority fax 7.31
problem, solve
    copying 9.24
    error messages 9.12
    faxing 9.26
    Linux 9.28
    paper feeding 9.16
    printing 9.17
    printing quality 9.19
    scanning 9.25

R

rear output slot, use 3.11
receive mode, set 7.3
receiving a fax
    in Ans/Fax mode 7.16
    in DRPD mode 7.17
    in Fax mode 7.15
    in Secure Receiving mode 7.35
    in Tel mode 7.15
    in the memory 7.18
redialing
    automatically 7.13
    manually 7.12
reduced/enlarged
    copying 5.8
    printing 4.17
replacing
    ADF rubber pad 8.13
    toner cartridge 8.8
reports, print 7.36
resolution
    faxing 7.9
    printing 4.8, A.13

S

scanning
    contol panel 6.3
    Linux A.14
    SmarThru 6.4
    USB flash drive 10.3
    WIA driver 6.7
searching Phonebook 7.26
Secure Receiving mode 7.35
sending a fax
    automatically 7.11
    manually 7.12
sharing printer, set B.3
SmarThru
    install 2.28
    uninstall 2.36
sounds, set 2.21
specifications
    facsimile D.5
    general D.2
    paper D.6
    printer D.4
    scanner and copier D.3
speed dial
    dialing 7.22
    storing 7.21

system requirements
    Linux A.3
    Windows 2.28

T

tel line, connect 2.11
toll save mode, use 2.23
toner cartridge
    installing 2.5
    maintaining 8.6
    redistributing 8.7
    replacing 8.8
toner save mode, use 2.23

U

uninstalling
    MFP driver
        Linux A.6
        Windows
            PCL 6 printer driver 2.35
    Printer Setting Utility 2.35
    SmarThru 2.36
USB
    connecting 3.7
USB flash drive
    installing 10.2
    managing 10.6
    printing 10.10
    scanning 10.3

V

volume, adjust
    ringer 2.21
    speaker 2.22

W

watermarks, use 4.18