SAMSUNG

SAMSUNG DIGITall
everyone's invited™

Laser Facsimile

Office Master

SF-530 Series

SAMSUNG LASER FACSIMILE

User's Guide

Trademarks

- SmarThru 2, MailBox, Image Manger, Scan Manager, Copy Manager, Image Viewer, AnyPage are trademarks of Samsung Electronics.
- Acrobat Reader is a trademark of Adobe Systems Inc.
- Windows, Windows 95, Windows 98, Windows Me, Windows NT and Windows 2000 are trademarks of Microsoft corporation.
- Other names and trademarks mentioned in this manual are trademarks of their respective holders.

Contents

Chapter 1 Getting Started

Introduction

Welcome! — 1.1
Contents — 1.3
Identifying Parts — 1.4

Setting Up Your Machine

Choosing a Location — 1.11
Preparing Your Machine for Use — 1.11
Attaching the Supports — 1.12
Connecting to the Phone Line — 1.14
Connecting to the Computer (SF-535e only) — 1.16
Plugging In the Power — 1.17
Loading Paper — 1.17
Installing the Toner Cartridge — 1.20
Setting the Date and Time — 1.22
Setting Your Fax Number and Name — 1.23
Testing the Machine (SF-530 only) — 1.23
Using Save Modes — 1.24

Chapter 2 Installing Samsung Software (SF-531P only)

Samsung SmarThru

About Samsung SmarThru Software — 2.1

Installing Software

System Requirements — 2.3
Installing the Samsung Software — 2.4
Configuring the Fax Gate on Your PC — 2.6
Configuring the Internet Gate on Your PC — 2.9
Using Your Machine with a USB Cable — 2.13
Installing Bonus Software — 2.16
Making Installation Diskettes — 2.16
Installing Software from Diskettes — 2.17
Uninstalling Samsung Software — 2.18

Chapter 3 Stand-alone Fax

Setting Up Stand-alone Fax System

Setting Volume ---------- 3.1
Setting Alert Tones ---------- 3.2
Setting User-Selectable System Options ---------- 3.2

Sending a Fax

Preparing Documents for Faxing or Copying ---------- 3.7
Setting Document Resolution and Contrast ---------- 3.8
Loading Documents ---------- 3.9
Sending a Fax Automatically ---------- 3.10
Sending a Fax After Talking ---------- 3.11
Voice Request ---------- 3.12

Receiving a Fax

About Reception Modes ---------- 3.13
Loading Paper for Receiving Faxes ---------- 3.14
Receiving Automatically in FAX Mode ---------- 3.14
Receiving in AUTO Mode ---------- 3.15
Receiving Automatically in ANS/FAX Mode ---------- 3.15
Receiving Manually in TEL Mode ---------- 3.16
Receiving Manually in TEL Mode Using an Extension Phone 3.16

Making a Copy

Copying Overview ---------- 3.17
Making a Single Copy ---------- 3.17
Using Advanced Copy Features ---------- 3.18

Automatic Dialling

How To Enter a Name Using the Number Keys --------- 3.19
One-Touch Dialling ---------- 3.21
Speed Dialling ---------- 3.23
Using the Phonebook on Your Computer (SF-535e only) – 3.25
Searching for a Number in the Memory ---------- 3.27

Advanced Fax

Broadcasting ---------- 3.28
Delayed Fax ---------- 3.29
Priority Fax ---------- 3.31
Polling ---------- 3.32
Adding Documents To a Scheduled Operation --------- 3.34
Cancelling a Scheduled Operation ---------- 3.34

Contents (continued)

Chapter 3 Stand-alone Fax *(continued)*

Additional Functions

Sending Flash ---------- 3.35
Monitoring a Dual Job Status ---------- 3.35
Forwarding Received Faxes ---------- 3.36
Toll Save Fax ---------- 3.37
Printing Reports ---------- 3.38
Group Dialling (for Multi-Address Transmission) ---------- 3.40

Chapter 4 E-mail Fax (SF-535e only)

About the E-mail Fax ---------- 4.1
Configuring E-mail Information ---------- 4.2
Setting up E-mail Address Book ---------- 4.8
Sending an E-mail Fax ---------- 4.11
Receiving an E-mail Fax ---------- 4.12

Chapter 5 Printing (SF-531P only)

Print Media

Selecting Print Media ---------- 5.1
Using the Automatic Paper Input Tray ---------- 5.3
Using the Manual Paper Input Tray ---------- 5.6
Specialty Paper Guidelines ---------- 5.8

Printing

Printing a Document ---------- 5.9
Cancelling a Print Job ---------- 5.12
Printing Help ---------- 5.13
Reprinting a Last Page ---------- 5.13
Printing Several Pages Per Sheet ---------- 5.14
Scaling Your Document ---------- 5.15
Fitting Your Document to a Selected Paper Size ---------- 5.16
Printing Posters ---------- 5.17
Printing Watermarks ---------- 5.18
Using Overlays ---------- 5.20
Printing in a Network Environment ---------- 5.24

Chapter 6 Maintenance

Guidelines for Maintenance — 6.1
Clearing Memory — 6.1
Cleaning the OPC Drum — 6.2
Adjusting Shading — 6.2
Setting the Machine to be Checked by Phone — 6.3
Sending Toner Low Information to the Service Company — 6.3
Cleaning the Machine — 6.4
Caring for the Toner Cartridge — 6.7

Chapter 7 Troubleshooting

Clearing Jams — 7.1
LCD Error Messages — 7.5
Fax Problems — 7.7
General Printing Problems (SF-531P only) — 7.9
Print Quality Problems — 7.11

Appendix

Connecting Other Device to the Phone line — A.1
Specifications — A.4
Safety Information — A.6
Index — A.10

Refer to the SmarThru User's Guide for information on:

- Scanning a document
- Copying a document
- Creating and sending e-mail and PC-fax
- Working with a scanned image
- Recognizing a scanned image as text
- How to use additional features using the Samsung SmarThru 2 program

Environmental and Safety Consideration

Laser Safety Statement

The printer is certified in the U.S. to conform to the requirements of DHHS 21 CFR, chapter 1 Subchapter J for Class I(1) laser products, and elsewhere is certified as a Class I laser product conforming to the requirements of IEC 825.

Class I laser products are not considered to be hazardous. The laser system and printer are designed so there is never any human access to laser radiation above a Class I level during normal operation, user maintenance, or prescribed service condition.

WARNING

Never operate or service the printer with the protective cover removed from Laser/Scanner assembly. The reflected beam, although invisible, can damage your eyes.

CAUTION - INVISIBLE LASER RADIATION WHEN THIS COVER OPEN. DO NOT OPEN THIS COVER.

VORSICHT - UNSICHTBARE LASERSTRAHLUNG, WENN ABDECKUNG GEÖFFNET. NICHT DEM STRAHL AUSSETZEN.

ATTENTION - RAYONNEMENT LASER INVISIBLE EN CAS D'OUVERTURE.EXPOSITION DAN GEREUSE AU FAISCEAU.

ATTENZIONE -RADIAZIONE LASER INVISIBILE IN CASO DI APERTURA.
EVITARE L'ESPOSIZIONE AL FASCIO.

PRECAUCION -RADIACION LASER IVISIBLE CUANDO SE ABRE. EVITAR EXPONERSE AL RAYO.

ADVARSEL. - USYNLIG LASERSTRÅLNING VED ÅBNING NÅR SIKKERHEDSBRYDERE ER UDE AF FUNKTION. UNDGÅ UDSAETTELSE FOR STRÅLNING.

ADVARSEL. - USYNLIG LASERSTRÅLNING NÅR DEKSEL ÅPNES. STIRR IKKE INN I STRÅLEN. UNNGÅ EKSPONERING FOR STRÅLEN.

VARNING - OSYNLIG LASERSTRÅLNING NÄR DENNA DEL ÄR ÖPPAND OCH SPÄRREN ÄR URKOPPLAD. BETRAKTA EJ STRÅLEN. STRÅLEN ÄR FARLIG.

VARO! - AVATTAESSA JA SUOJALUKITUS OHITETTAESSA OLET ALTTIINA NÄKYMÄTTÖMÄLLE LASERSÄTEILYLLE ÄLÄ KATSO SÄTEESEEN.

Ozone Safety

During normal operation, the Samsung SF-530 Series produces ozone. the ozone produced does not present a hazard to the operator. However, it is advisable that the machine be operated in a well ventilated area.

If you need additional information about ozone, please request your nearest Samsung dealer.

Power Saver

This printer contains advanced energy conservation technology that reduces power consumption when it is not in active use.

When the printer does not receive data for an extended period of time, power consumption is automatically lowered.

The energy star emblem does not represent EPA endorsement of any product or service.

Radio Frequency Emissions

FCC Regulations

This equipment has been tested and found to comply with the limits for a Class B digital device, pursuant to Part 15 of the FCC Rules. These limits are designed to provide reasonable protection against harmful interference in a residential installation. This equipment generates, uses and can radiate radio frequency energy and, if not installed and used in accordance with the instructions, may cause harmful interference to radio communications. However, there is no guarantee that interference will not occur in a particular installation.

If this equipment does cause harmful interference to radio or television reception, which can be determined by turning the equipment off and on, the user is encouraged to try to correct the interference by one or more of the following measures:

- Reorient or relocate the receiving antenna.
- Increase the separation between the equipment and receiver.
- Connect the equipment into an outlet on a circuit different from that to which the receiver is connected.
- Consult the dealer or an experienced radio/TV technician for help.

Do not make any changes or modifications to the equipment unless otherwise specified in the manual. If such changes or modifications should be made, you must first stop operation of the equipment.

Use of shielded cable is required to comply with Class B limits in Subpart B of Part 15 of FCC Rules.

Canadian Radio Interference Regulations

This digital apparatus does not exceed the Class B limits for radio noise emissions from digital apparatus as set out in the interference-causing equipment standard entitled “Digital Apparatus”, ICES-003 of the Industry and Science Canada.

Cet appareil numérique respecte les limites de bruits radioélectriques applicables aux appareils numériques de Classe B prescrites dans la norme sur le matériel brouilleur: “Appareils Numériques”, ICES-003 édictée par l’Industrie et Sciences Canada.

Declaration of Conformity (European Countries)

Approvals and Certifications

The CE marking applied to this product symbolises Samsung Electronics Co., Ltd. Declaration of Conformity with the following applicable 93/68/EEC Directives of the European Union as of the dates indicated:

January 1, 1995: Council Directive 73/23/EEC Approximation of the laws of the member states related to low voltage equipment.

January 1, 1996: Council Directive 89/336/EEC (92/31/EEC), approximation of the laws of the Member States related to electromagnetic compatibility.

March 9, 1999: Council Directive 1999/5/EC on radio equipment and telecommunications terminal equipment and the mutual recognition of their conformity.

A full declaration, defining the relevant Directives and referenced standards can be obtained from your Samsung Electronics Co., Ltd. representative.

EC Certification

Certification to 1999/5/EC Radio Equipment & Telecommunications Terminal Equipment Directive (FAX)

This Samsung product has been self-certified by Samsung for pan-European single terminal connection to the analogue public switched telephone network (PSTN) in accordance with Directive 1999/5/EC. The product has been designed to work with the national PSTNs and compatible PBXs of the European countries:

In the event of problems, you should contact the Euro QA Lab of Samsung Electronics Co., Ltd. in the first instance.

The product has been tested against TBR21 and TBR 38. To assist in the use and application of terminal equipment which complies with this standard, the European Telecommunication Standards Institute (ETSI) has issued an advisory document (EG 201 121) which contains notes and additional requirements to ensure network compatibility of TBR21 terminals. The product has been designed against, and is fully compliant with, all of the relevant advisory notes contained in this document.

chapter 1

Getting Started

Congratulations on the purchase of your SF-530 series product! This chapter provides information on the following topics:

Introduction

- ♦ Welcome!
- ♦ Contents
- ♦ Identifying Parts

Setting Up Your Machine

- ♦ Choosing a Location
- ♦ Attaching the Supports
- ♦ Connecting Your Machine to the Phone Line
- ♦ Connecting Other Devices to the Phone Line
- ♦ Connecting to Computer (SF-531P only)
- ♦ Plugging In the Power
- ♦ Loading Paper
- ♦ Installing Toner Cartridge
- ♦ Setting the Date and Time
- ♦ Setting Your Fax Number and Name
- ♦ Testing the Machine (SF-530 only)
- ♦ Using Save Modes

Introduction

Welcome!

Thank you for purchasing the Samsung SF-530 series, a powerful business tool with the capabilities of a full range of office equipment. With the Samsung SF-530 series, you can:

Fax

Use the Samsung SF-530 series as a **full-featured stand-alone fax machine** to send and receive faxes. Perform advanced tasks such as delayed transmission, broadcasting, and unattended memory sending.
For Samsung SF-531P, you can faxes a document as a E-mail message. And if you use the Samsung SmarThru software, you can send faxes from and receive to your computer (PC faxing).

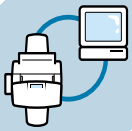

Print (SF-531P only)

You can get 600 x 600 dpi high-quality laserjet printing from the Samsung SF-531P machine. You can create professional documents using the creative printing features on the various kinds of print media, such as plain papers, envelopes, transparencies, label, and so on.

Copy

Make up to **99 copies** of a 20-pages document without having to connect to a PC. You can adjust the contrast, enlarge or reduce the copies, collate, and more.
For Samsung SF-531P, if you use the Samsung SmarThru software on the PC, you can copy a scanned image using various copy options, such as multiple pages on a sheet, poster printing, and a cloning feature.

Scan (SF-531P only)

Scan important documents to create electronic files. Use the scanner to add photo or graphic images to other software applications or to jazz up your projects. You can also scan a document and attach it to an e-mail message. AnyPage OCR (Optical Character Recognition) software lets you scan text directly into your word processing program.

Use Samsung SmarThru software (SF-531P only)

Samsung SmarThru program consists of several components that provide particular functionality as follows:

- **Scan Manager** — Working with documents or images, you can scan to Image Manager, scan to OCR software, scan to e-mail or to e-fax.
- **Image Manager** — Working with images, you can import, export, store and change images.
- **Copy Manager** — Working with documents or images, you can control the copying process. It can also save a copy of the image or document to Image Manager.
- **MailBox** — Working with e-mail and e-fax messages, you can create, send, browse and store messages. (Note e-mail service is available only if you have subscribed to an Internet service provider and properly configured the Internet gate when you install the Samsung software)
- **Image Viewer** — Working with documents or images, you can view the image in a variety of graphical formats.

Contents

Here's what comes with the SF-530 series.

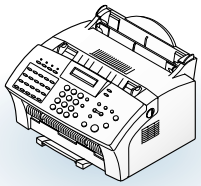

SF-530 series machine

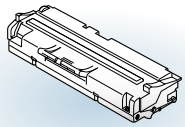

Toner cartridge

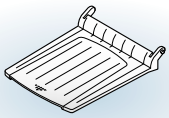

Document output support

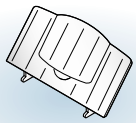

Document input support

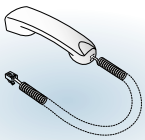

Handset

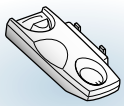

Handset cradle

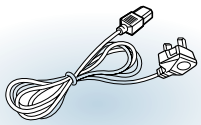

Power cord *

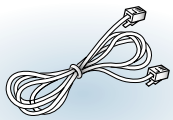

Telephone line cord *

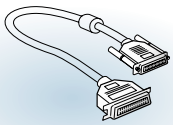

Parallel cable
(for SF-531P only)

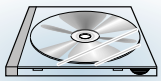

software CD-ROM
(for SF-531P only)

SF-530 series
User's Guide

SmarThru
User's Guide
(for SF-531P only)

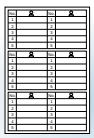

One-touch label
for the plate

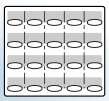

One-touch label
for the front panel

*: These may look different depending on the country.

Note: You should use the Telephone line cord which is supplied with the machine. If you are replacing it with the other vendor's part, it should be AWG #26 or lower gage.

Identifying Parts

Before setting up your machine, make sure you identify the following parts related to the scanner and paper print paths.

Identifying Scanner Path Parts

Items to be faxed, copied, or scanned use the scanner path which consists of the following parts:

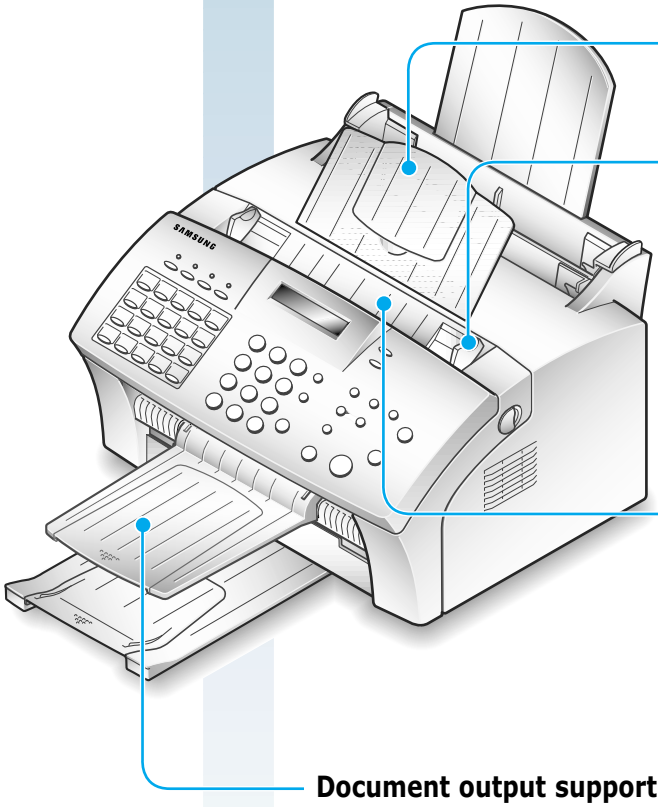

Document input support

Supports original documents.

Document guides

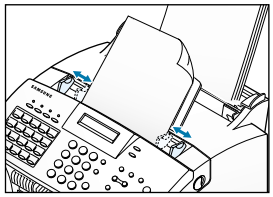

Aligns documents.

Automatic document feeder

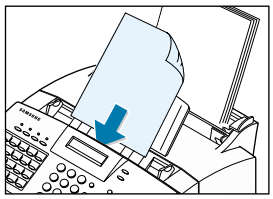

Loads up to 20 pages at a time.

Document output support

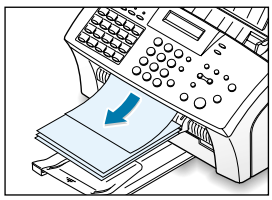

Supports the original document when faxing, copying, or scanning is complete.

Identifying Printer Path Parts

Paper for printing, receiving faxes and copying follow the printer path. This path consists of the following parts:

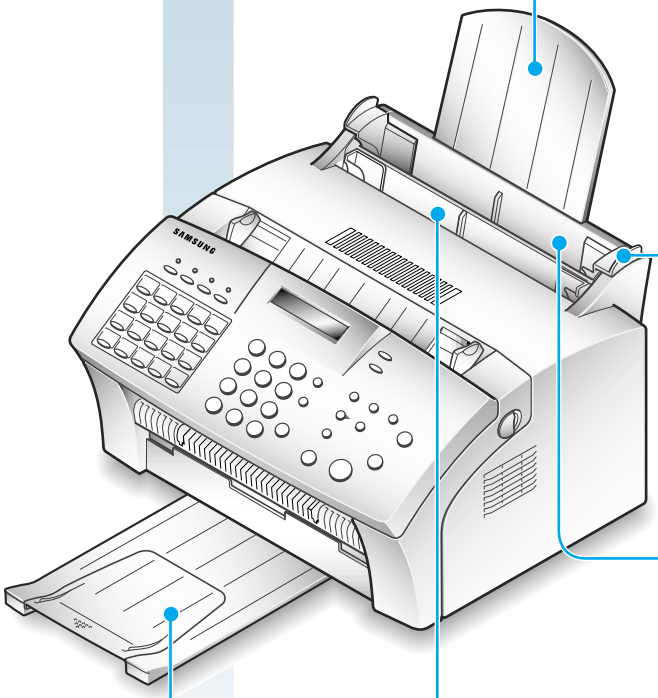

Paper input support

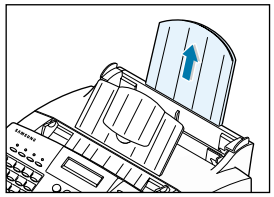

Support the print media

Paper guides

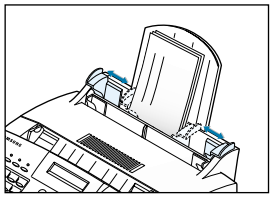

Aligns paper.

Automatic paper input tray

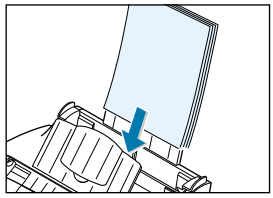

Holds paper.

Manual paper input tray
(For SF-535e only)

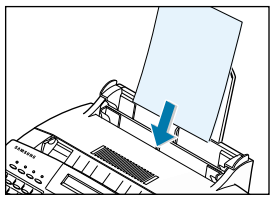

Use to feed paper one sheet at a time.

Paper output tray

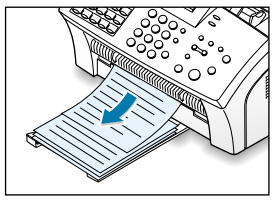

Supports the printed pages.

Identifying Front Panel Features

Look for the following keys and features on the front panel. These features are used to fax documents, make copies, and adjust settings.

For SF-530

LCD Display
Displays messages and menu settings.

Toner
Turns Toner Save mode on or off.

Power
Turns Power Save mode on or off. Also, allows you to set up the Power Save option when held down.

Paper
Turns Paper Save mode on or off. Also, allows you to set up the Paper Save option when held down.

Toll
Allows you to send the Toll Save fax. Also, allows you to set up the time and destination for Toll Save fax when held down.

Twenty One-Touch Buttons
Store frequently dialled fax numbers.

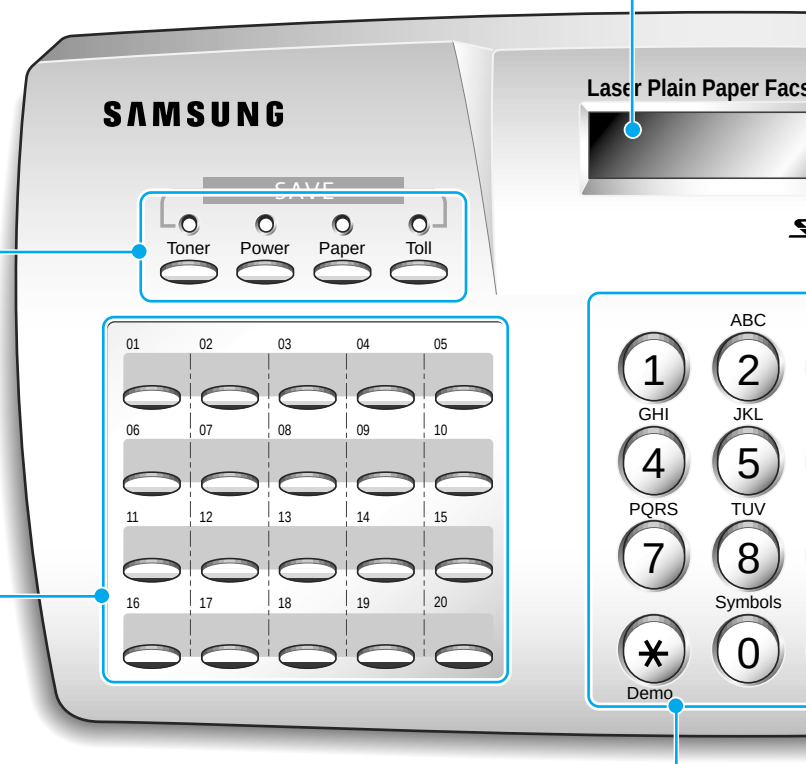

Number Keypad
Use to enter fax numbers manually or to enter letters.

Speed (#)
Use to send documents by entering a registered 2-digit number.

Demo (✳)
Prints a demo page to test your machine.

RCV. Mode/Contrast
When a document is loaded, choose the contrast characteristic of copied or transmitted documents.
When a document is not loaded, choose the receive mode to use.
The selected mode is displayed in Standby mode.

Resolution
Choose the resolution of documents.

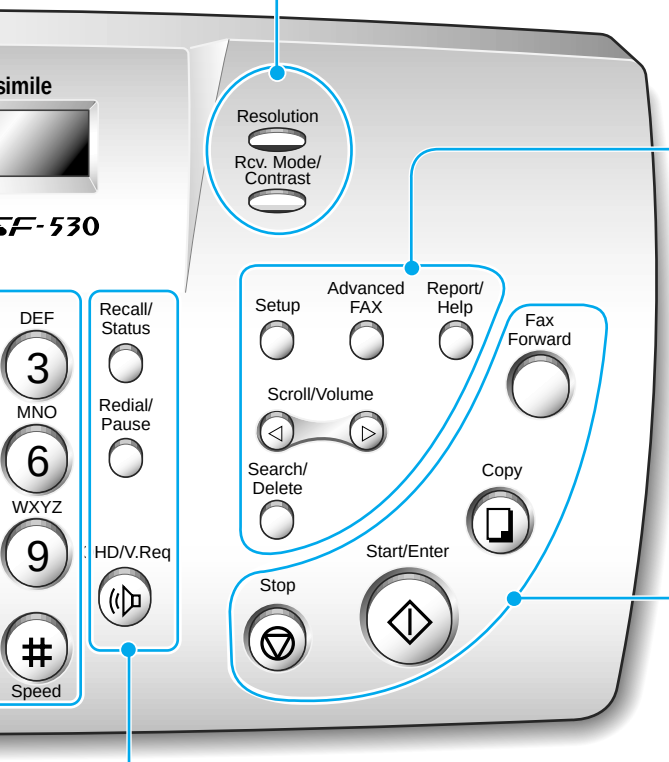

Setup
Use to set up various system options.

Advanced Fax
Use to access advanced fax operations.

Report/Help
Use to print various reports and the help list.

Scroll/Volume
Use to scroll the menu items or use to move the cursor left or right through the display. Also, use to adjust the ringer volume.

Search/Delete
Use to search for a number in memory or to delete the last digit when typing text.

Fax Forward
Allows you to forward the received faxes to the defined remote fax machine(s) at a specified duration.

Copy
Makes a copy of a document.

Start/Enter
Starts a job. Also use to activate the selection shown on the display.

Stop
Stops an operation at any time.

Recall(R or Flash)/Status
Performs a switch-hook operation. Also use to switch the display status while performing dual jobs.

Redial/Pause
Use to redial the last fax number or to insert a pause into a fax number.

OHD/V.Req
Use to dial numbers without picking up the handset. Also use to make a voice call after sending or receiving a fax.

For SF-535e

LCD Display
Displays messages and menu settings.

Toner
Turns Toner Save mode on or off.

Power
Turns Power Save mode on or off. Also, allows you to set up the Power Save option when held down.

Paper
Turns Paper Save mode on or off. Also, allows you to set up the Paper Save option when held down.

Toll
Allows you to send the Toll Save fax. Also, allows you to set the time and destination for Toll Save fax when held down.

Nineteen One-Touch Buttons
Store frequently dialled fax numbers. Also, stores e-mail addresses.

Report/Help
Allows you to print various reports and the help list.

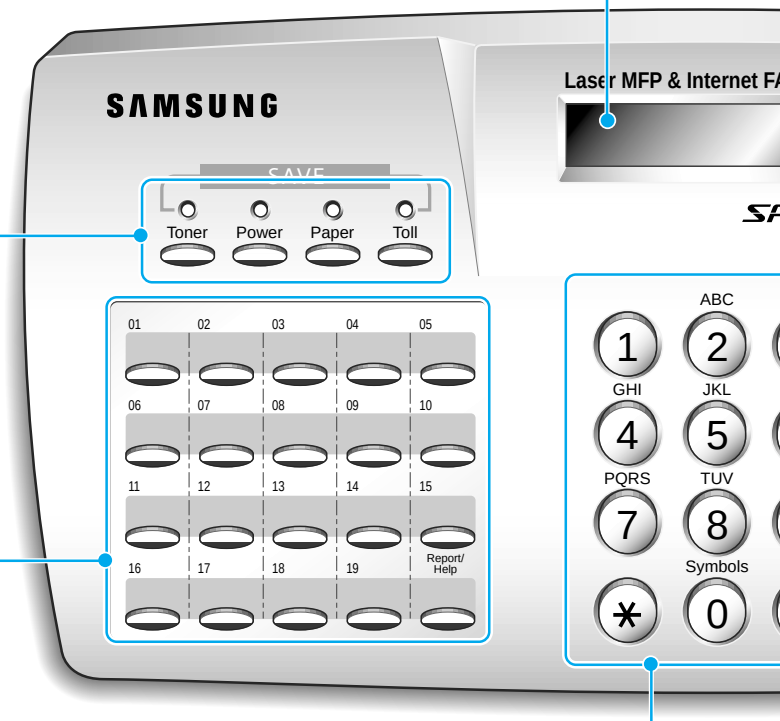

Number Keypad
Use to enter fax numbers manually or to enter letters.

Speed (#)
Use to send documents by entering a registered 2-digit number.

RCV. Mode/Contrast
When a document is loaded, choose the contrast characteristic of copied or transmitted documents.
When a document is not loaded, choose the receive mode to use.
The selected mode is displayed in Standby mode.

Resolution
Choose the resolution of documents.

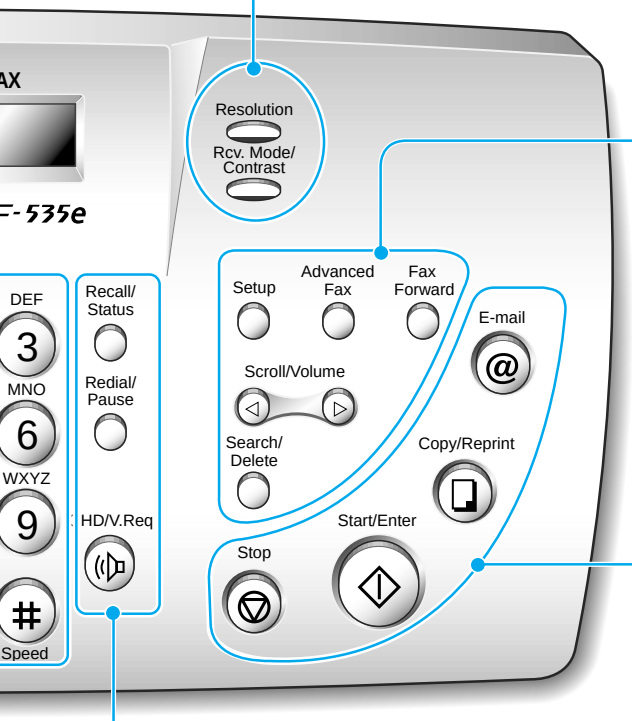

Setup
Use to set up various system options.

Advanced FAX
Use to access advanced fax operations.

Fax Forward
Allows you to forward the received faxes to the defined remote fax machine(s) at a specified duration.

Scroll/Volume
Use to scroll the menu items or use to move the cursor left or right through the display. Also, use to adjust the ringer volume.

Search/Delete
Use to search for a number in memory or to delete the last digit when typing text.

E-mail
Use to send or receive an e-mail message and to register the information for e-mail transmission or reception.

Copy/Reprint
Makes a copy of a document.
Also, reprints the last page from the PC when .

Start/Enter
Starts a job. Also use to activate the selection shown on the display.

Stop
Stops an operation at any time.

Recall(R or Flash)/Status
Performs a switch-hook operation.
Also use to switch the display status while performing dual jobs.

Redial/Pause
Use to redial the last fax number or to insert a pause into a fax number.

OHD/V.Req
Use to dial numbers without picking up the handset. Also use to make a voice call after sending or receiving a fax.

Identifying Connecting Parts and Others

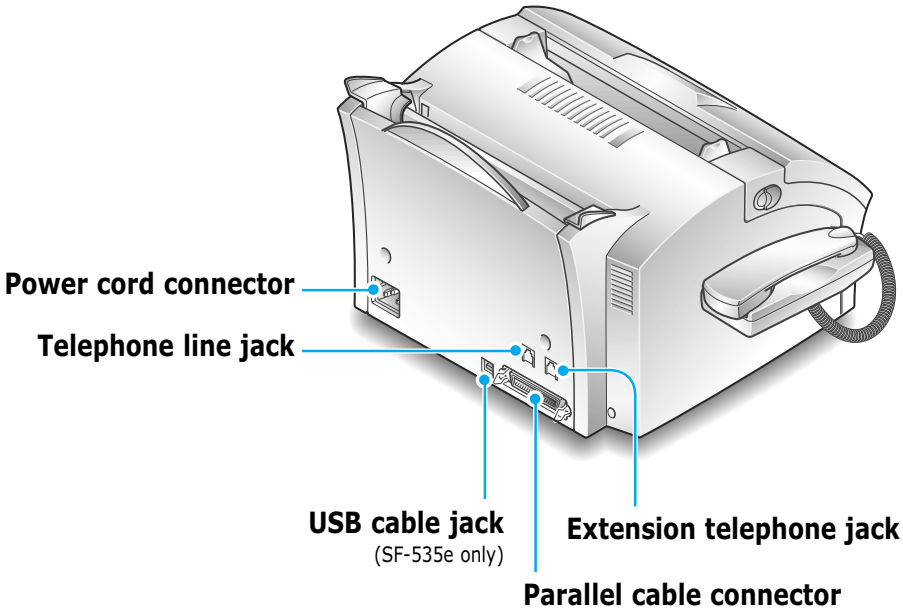

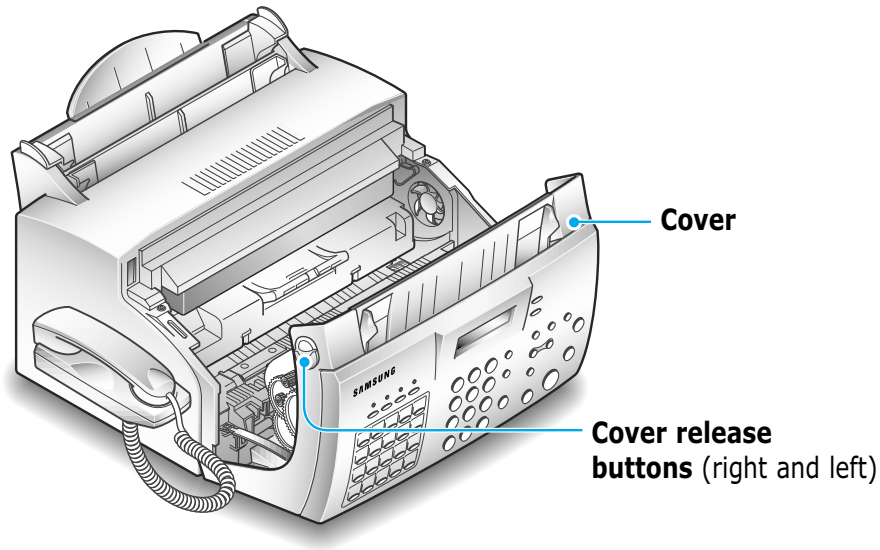

Setting Up Your Machine

Choosing a Location

For the trouble-free operation of your machine, place it on a flat, stable surface near your workstation. Leave enough space to allow for easy paper loading and exiting, as well as opening the front cover.

Do not place your machine:

- In direct sunlight.
- Near heat sources or air conditioners.
- In a dusty or dirty environment.

Preparing Your Machine for Use

When you take the SF-530 series out the box, note that it has been packaged to protect it during shipping. Before you use the machine, make certain that you check for the following items:

- Remove all tapes.
- Remove all packing materials.

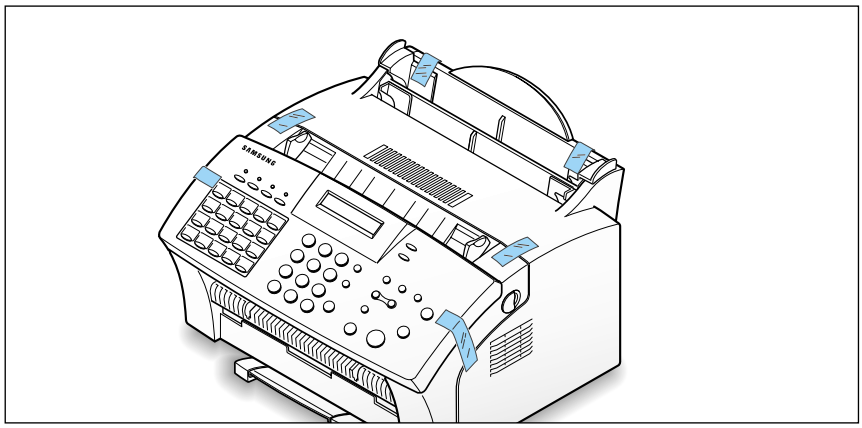

Attaching the Supports

Document Input Support

Insert the document input support with the groove pointing to the rear top of the machine.

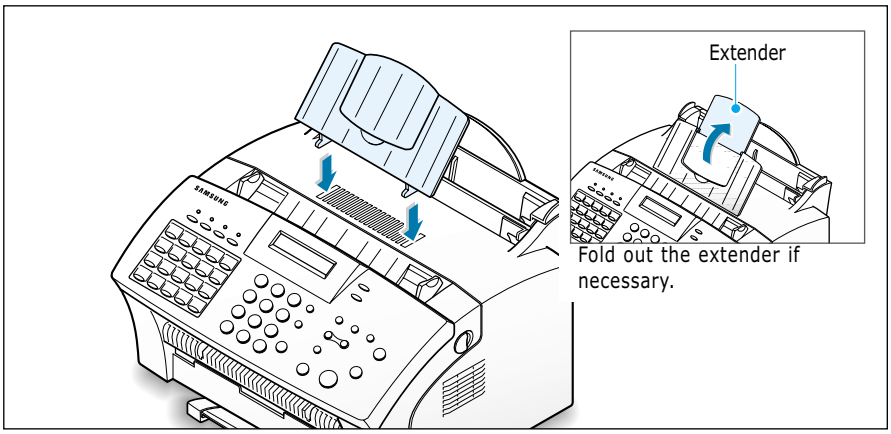

Document Output Support

Insert the two tabs on the document output support into the slots on the front of your machine.

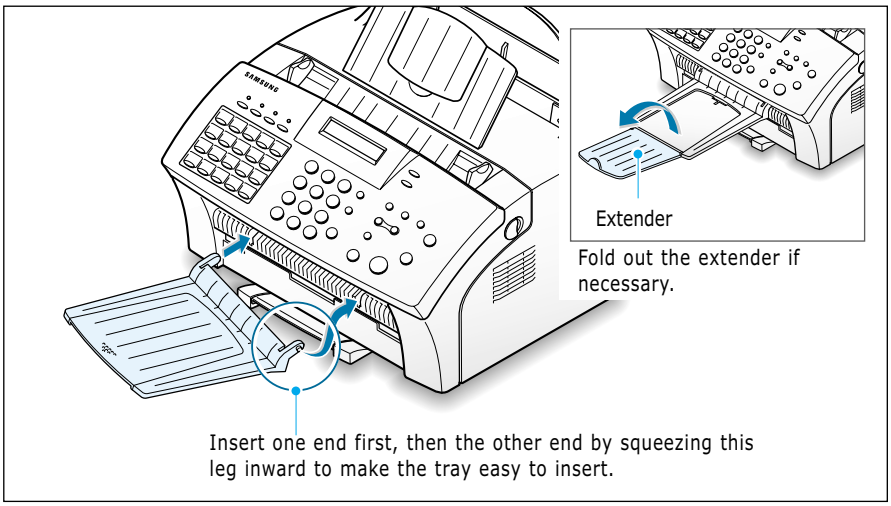

Note: The SF-530 series is shipped with the paper output tray already installed. Extend the tray to use.

Fold out the extender if necessary.

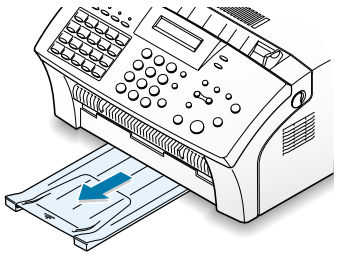

Handset and Handset Cradle

1. Plug the end of the coiled cord of the handset into the jack on the left side of your machine.

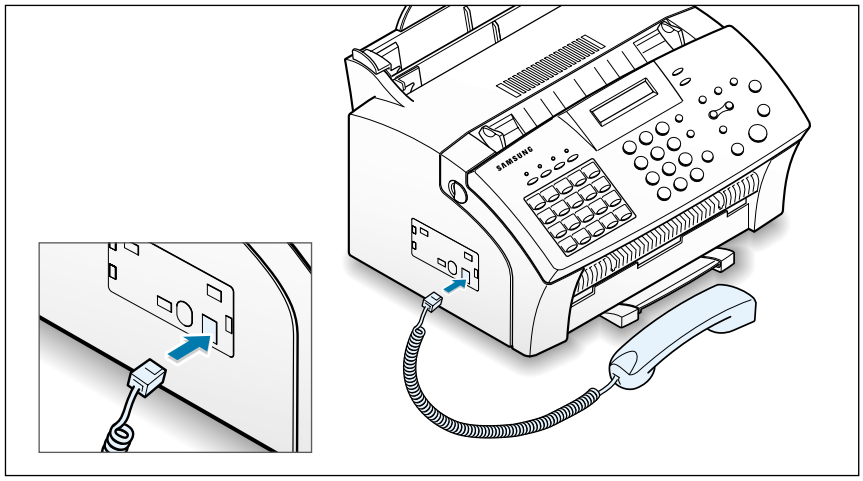

2. Hold the cradle using your hand as shown.

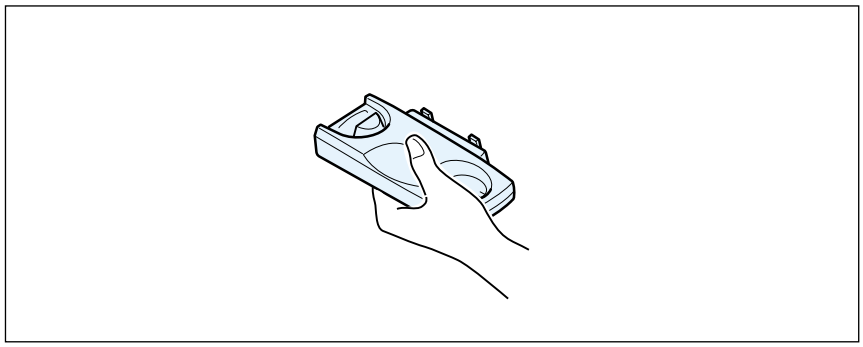

3. Attach the handset cradle to the main body.

   Insert the two tabs of the cradle into the slots on the left side of the machine as shown, and while pressing part Ⓐ on the bottom of the cradle, push the cradle toward the machine until it clicks into place.

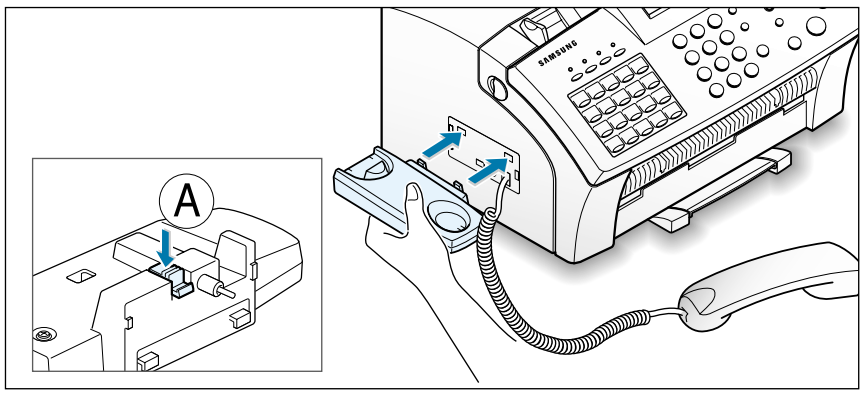

Notes:

- There is a one-touch plate built under the handset cradle. You can use this plate with the supplied one-touch label sheet. Write information on the label up to 10 items to remind you where the most frequently used number is stored and attach the label on the plate.

  To find the desired number, rotate the plate away from the cradle, and slide it under the cradle after using it.

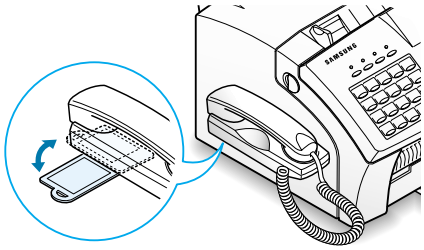

- If you want to remove the cradle, while pushing up the part Ⓐ, on the bottom of the cradle, slide the cradle down, then take it out.

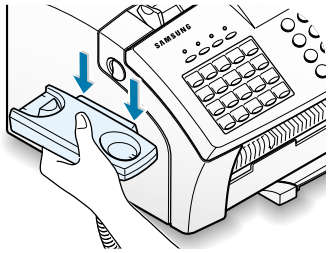

Connecting to the Phone Line

For proper operation, the SF-530 series must be connected to the wall jack. Once you have decided which wall jack you will be using, check a box below and follow the instructions.

☐ **I only have one phone line coming to this wall jack.** (This includes two phone numbers on one line with distinctive ring service.) Go to "To Connect to a Wall Jack that Has Only One Phone Line" on next page.

☐ **I have two phone lines coming to this wall jack.** Go to "To Connect to a Wall Jack that Has Two Phone Lines" on page A.2.

To Connect to a Wall Jack that has Only One Phone Line

1. Plug the included telephone cord into the jack on the back of the unit marked the word **LINE**.

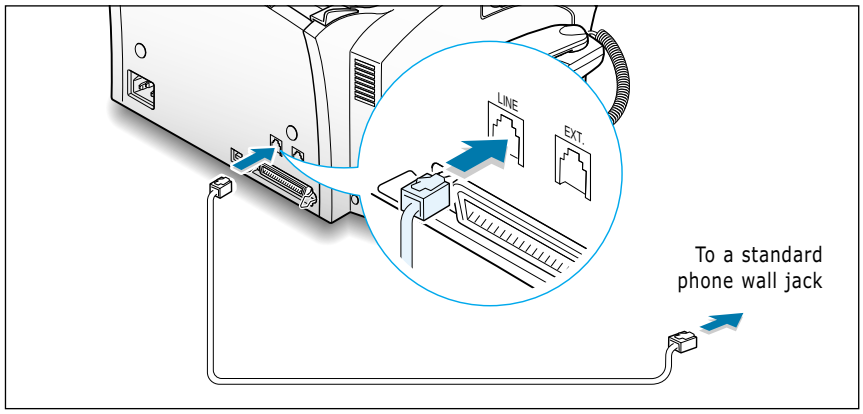

2. If a telephone cord is plugged into the wall jack, unplug the cord and set it aside.

3. Plug the other end of the phone cord into the wall jack.

Notes:

- If you are connecting other devices such as a telephone to the phone line, go to Appendix “Connecting Other Devices To the Phone Line” on page A.1.
- If you are not connecting other devices, go to “Plugging In the Power” on page 1.17.

To Connect to a Wall Jack that Has Two Phone Lines

1. Plug the included telephone cord into the jack on the back of the unit marked the word **LINE**.

2. If a telephone cord is plugged into the wall jack, unplug it and set it aside.

3. If you do not have a wall jack that has a built-in splitter, plug a phone unit splitter (not included) into the wall jack.

4. Plug the cord into the side of the phone unit splitter for the fax number.

Notes:

- If you are connecting other devices such as a telephone to the same phone line, go to Appendix “Connecting Other Devices To the Phone Line” on page A.1.
- If you are not connecting other devices, go to “Plugging In the Power” on page 1.17.

Connecting to the Computer (SF-535e only)

Your machine has a parallel and a USB interface port which allow use with a Windows PC.

Connecting to the Computer Using the Parallel interface

1. Plug the supplied parallel printer cable into the connector on the back of your machine. Push the metal clips down to fit inside the notches on the cable plug.

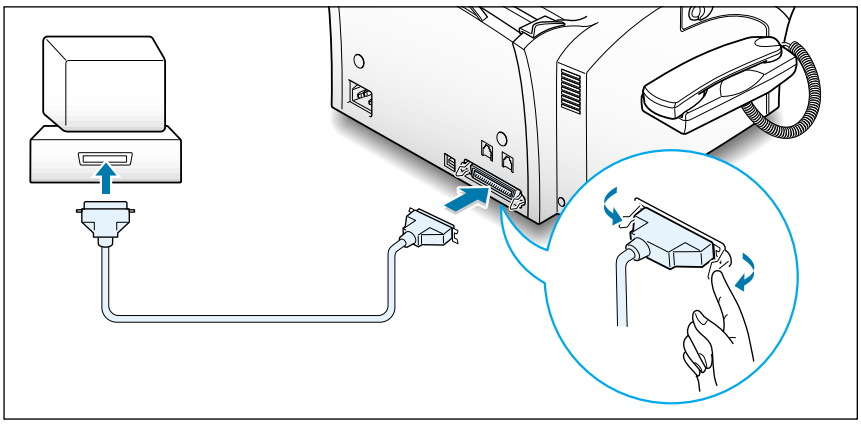

2. Connect the other end of the cable to the parallel interface port on your computer. See your computer documentation for more information.

Connecting to the Computer Using the USB interface

If you have a USB (Universal Serial Bus) port enabled on your computer, and if your computer is running Windows 98, you can connect your SF-535e to the USB chain of devices.

To use your machine using the USB cable, see page 2.13.

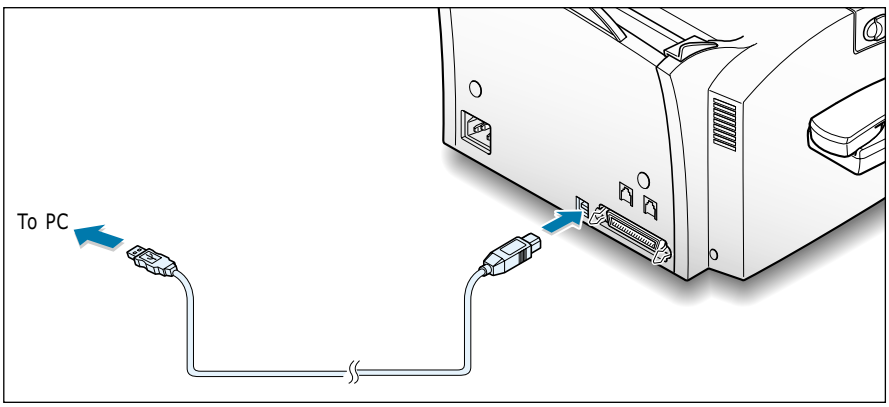

Plugging In the Power

Plug one end of the cord into the back of the machine and the other end into a standard AC power outlet.

The SF-530 series will turn on and the display will show 'SYSTEM INITIAL'. If there is no paper loaded, the displays will shows 'NO PAPER.' then if there is no cartridge installed, the display will show 'JAM/ NO CARTRIDGES'.

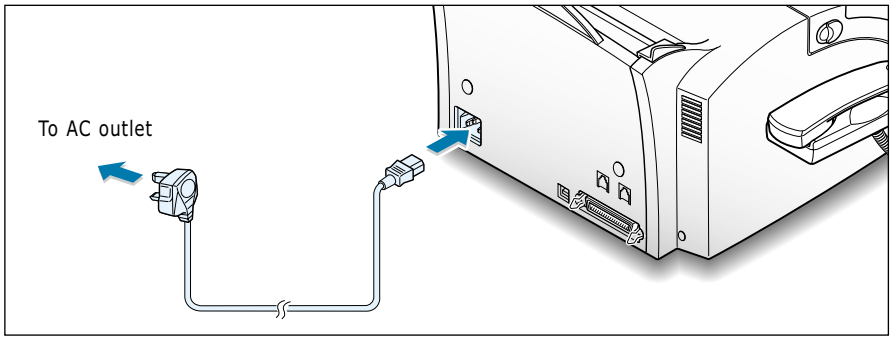

To turn off, unplug the power cord.

Loading Paper

For best results, use high quality xerographic paper. The automatic paper input tray can hold a maximum of 150 sheets of plain paper. The maximum capacity may be less, depending on the paper thickness.

Note: For stand-alone copy and fax operations, the SF-530 series product supports A4, letter, and legal paper. After loading paper, make sure that you select the correct paper size. For more information on setting the paper size, see 'Setting User-Selectable System Options' on page 3.2.

1. Pull the paper input support completely out of the unit.

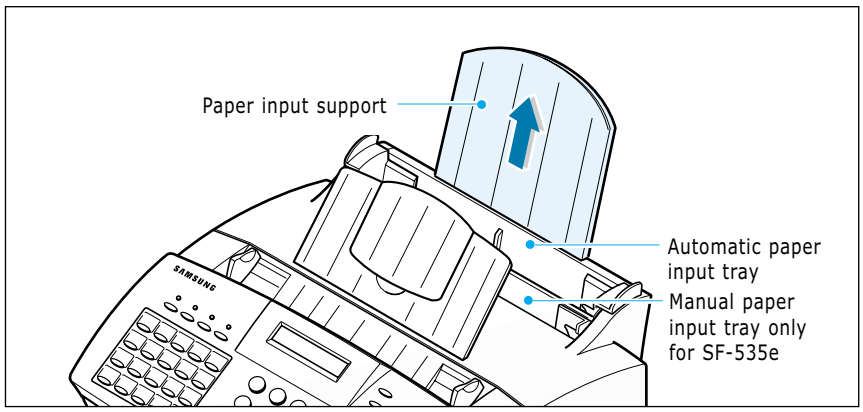

2. Remove a stack of paper from its packaging. Tap the stack on a flat surface to even it up.

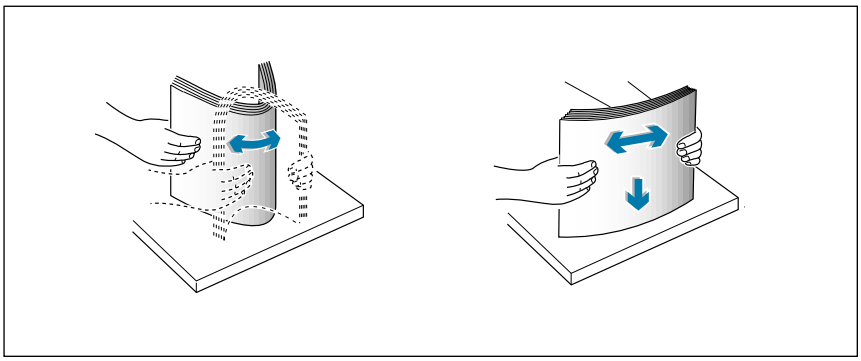

3. Insert the paper with the print side facing you.

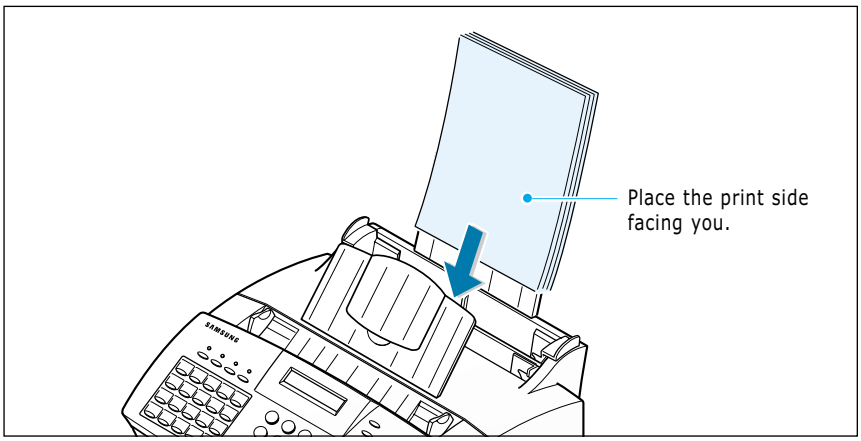

4. Adjust the paper guides to the width of the print media. Slide the guides until they lightly touch the stack of print media. Do not bend the print material.

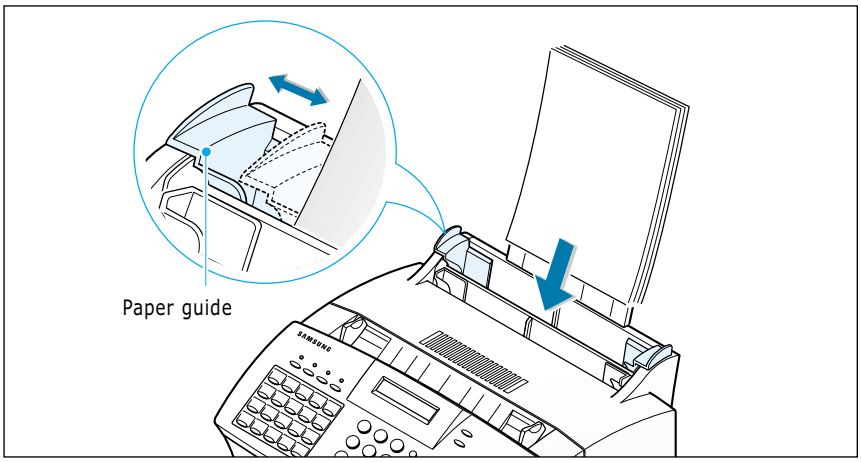

Paper Type and Size

Satisfactory print and receive quality can be obtained with many types of plain paper. Since the quality of plain paper varies widely, test the print quality before buying large quantities of paper. Your machine uses a variety of papers including:

- Xerographic paper
- Bond paper
- Dual-purpose paper

Because all papers vary in physical characteristics, you can receive mixed results from different packages of paper even through the packages contain the same paper. If you encounter undesirable results, try the other side of the paper, a different type, or another package of the same kind of paper.

DO NOT use the following types of paper with your machine:

- Continuous form feed paper
- Synthetic paper
- Thermal paper
- Multi-sheet forms and documents
- Chemically treated paper
- Papers with raised, embossed lettering

To load paper with a preferred print side:

- If you are using xerographic paper, load the paper with the preferred print side facing down.
- If you are using letterhead or bond paper, load the paper with the preferred side facing up.

The following papers can be used in your machine for fax:

- Letter : 216 x 279 mm (8.5 x 11.0 in.) - 60 g/m2 ~ 90 g/m2 (16 ~ 24 lb)
- A4 : 210 x 297 mm (8.3 x 11.7 in.) - 60 g/m2 ~ 90 g/m2 (16 ~ 24 lb)
- Legal : 216 x 356 mm (8.5 x 14.0 in.) - 60 g/m2 ~ 90 g/m2 (16 ~ 24 lb)

Installing the Toner Cartridge

1. Pulling the cover release buttons found on both sides of the machine toward you, open the cover.

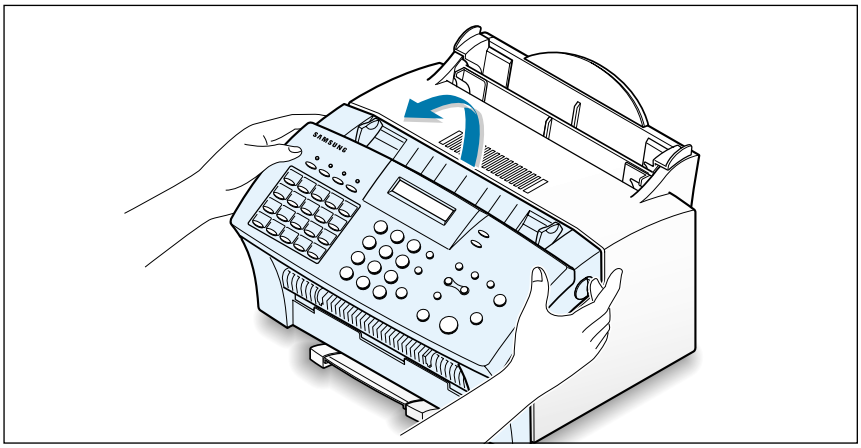

2. Unpack the cartridge from its plastic bag, and then remove the paper rolled the cartridge.

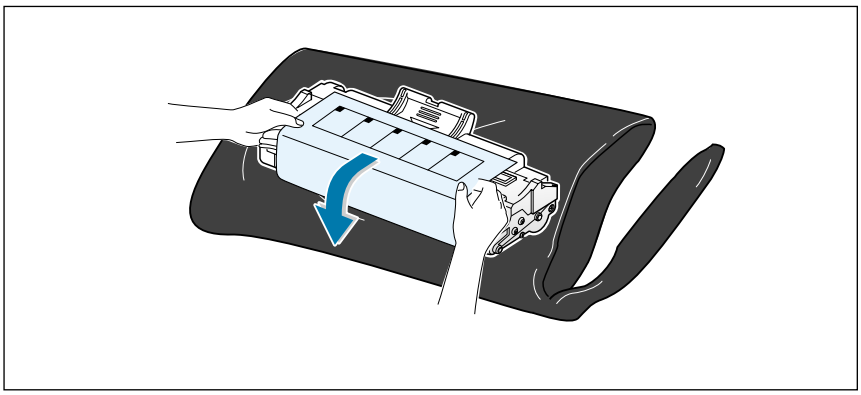

3. Shake the cartridge from side to side 5 or 6 times to redistribute the toner evenly inside the cartridge.

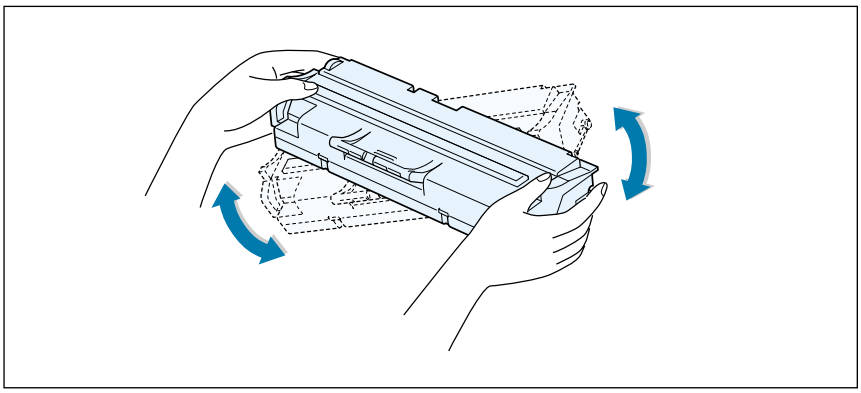

4. Find the cartridge slots inside the machine, one on each side.

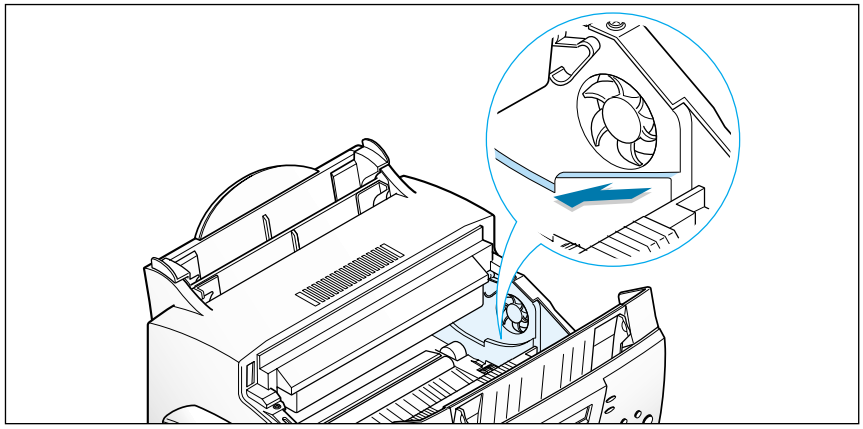

5. Grasp the handle at the front of the cartridge and slide it down between the cartridge slots, and push it firmly.

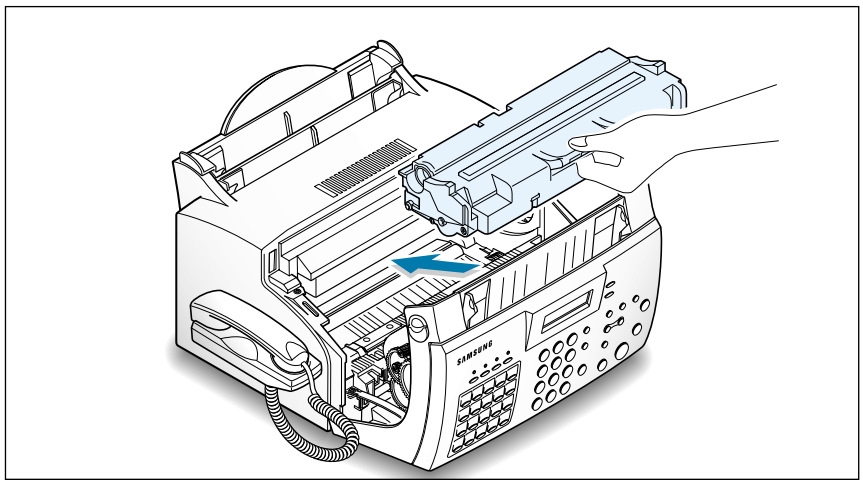

6. Close the cover. Make sure that the cover is securely closed.

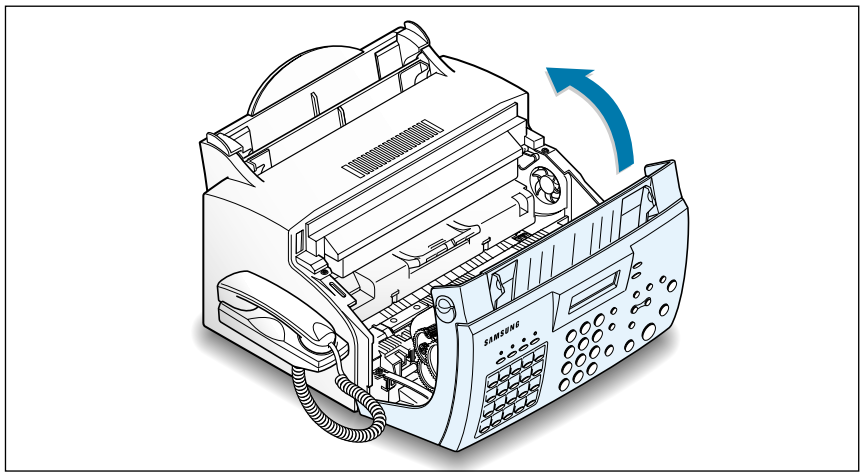

Setting the Date and Time

The current date and time are shown on the display when the machine is on and ready for use (Standby mode). The date and time are printed on all transmitted faxes.
When you install the SF-530 series for the first time, or when the product is without power for about 15 seconds, the display prompts you to reset the date and time.

```
SET DATE & TIME
```

1. Press **Setup** on the front panel. the display shows the first setup menu; FAX NUMBER/NAME.

2. Press ◀ or ▶ until 'TIME/DATE SETUP' appears, then press **Start/Enter** to access the Time/Date Setup menu.

3. The display asks you to choose a date format. Press **Start/Enter**.

4. Press ◀ or ▶ until you find the desired date format, then press **Start/Enter**.

   If you select USA, the date appears in format of Month-Day-Year. The EUROPE format will be displayed in format of Day-Month-Year.

   The display shows the currently set date and time using the selected date format and asks you to set the month.

```
04-01-2001 10:30
```

5. Enter the correct date and time for each item using the number keypad. Each time you enter the appropriate number, the display asks you to enter the next item in the following order: MONTH, DATE, YEAR, HOUR, and MINUTE.

   Enter the time in 24-hour format. For example, enter 2230 for 10:30 P.M.

   If you enter an invalid number, the display does not proceed to the next step. If this happens, re-enter the correct number.

6. When you are finished, press **Start/Enter** to save the setting. The display returns to Standby mode and shows the date and time you have set.

```
 MAR-9 12:30 FAX
```

Setting Your Fax Number and Name

Your fax number and name can be printed at the top of each page transmitted.

1. Press **Setup** on the front panel. The display shows the first setup menu; FAX NUMBER/NAME.

2. Press **Start/Enter** to access the Fax Number/Name menu.
   The display shows 'FAX NUMBER.'

3. Press **Start/Enter**.
   If there is a number already set, the number appears.

   TEL:_

4. Enter the telephone number your machine is connected to. You can enter up to 20 digits.

   Press * for plus sign (+) and # for a hyphen. If you entered a wrong number, press **Search/Delete** to delete it.

5. Press **Start/Enter** when the number on the display is correct.
   If there is a name already set, the name appears.

   NAME:_

6. Enter your name using number keypad. You can enter up to 40 characters.

   For details on how to use the number keypad to enter alphanumeric characters, see page 3.19.

7. Press **Start/Enter** when the name on the display is correct.

Testing the Machine (SF-530 only)

After installation, you may want to run a simple test on your machine by printing out a demo page.

Press and hold down **Demo** (*) on the front panel until the machine begins printing a demo page.

Using Save Modes

There is four saving mode buttons on the front panel of the SF-530 series. Using these buttons, you can save toner and power consumption, paper for printing, and toll for the fax call.

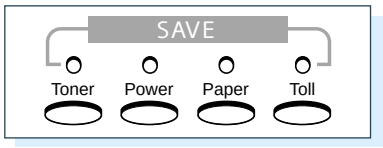

Toner Save Mode

Toner Save mode allows the machine to use less toner on each page.

Press **Toner** on the front panel to turn this mode on or off.

- If the LED is on, Toner Save mode activates and the machine uses less toner by 50% to print a page. Using this mode will extend the life of your toner cartridge and reduce your cost per page, but will reduce print quality.
- If the LED is off, Toner Save mode deactivates and the machine prints in the normal mode.

Power Save Mode

Power Save mode allows you to save the power consumption.

Press **Power** on the front panel to turn this mode on or off.

- If the LED is on, Power Save mode activates and the machine will go to a reduced power state. But it takes long to receive incoming faxes for warming up the machine.
- If the LED is off, Power Save mode deactivates and the machine keeps ready to operate with the minimum warm-up time. This uses more energy to keep your machine warm and ready to print.

To specify how long the machine waits before going to the Power Save mode, press and hold down **Power**, and select the desired time length among **5MIN**, **10MIN** and **15MIN** using ◄ or ►. Selecting **OFF** turns the Power Save mode off.

Note: Although you turned Power Save mode off by pressing **Power**, it activates if you have set the time length.

Paper Save Mode

With Paper Save mode on, you can save paper by reducing the data and printing two pages on one sheet of paper when copying or printing received document.

Press **Paper** on the front panel to turn this mode on or off.

- If the LED is on, Paper Save mode activates and the machine prints two pages on one sheet of paper when receiving a fax or making a copy of a document. The odd pages will be printed at the bottom of the paper. and the even pages at the top of the paper.

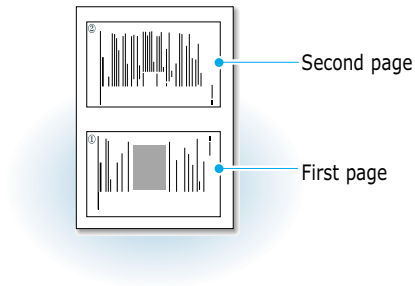

- If the LED is off, Paper Save mode deactivates.

To set up the Power Save mode option, press and hold down **Paper**, and select the desired option. The following options are available;

2-UP COPY: Uses Paper Save mode only for copying a document. Select **ON** or **OFF** using ◄ or ►.
2-UP FAX: Uses Paper Save mode only for receiving faxes. Select **ON** to or **OFF** using ◄ or ►.

Notes:
- When you making multiple copies, you cannot use this mode because the machine scans and prints the pages one by one.
- The data will be reduced in vertical and horizontal at the same rate depending on the paper size you chose in the Fax Paper Size setup menu (see page 3.3).

Toll Save Mode

Toll Save mode allows you to save the toll for the telephone call by transmitting the document stored in memory during the time slot when the call charge is discounted.

For more information on Toll Save fax, see page 3.37.

chapter 2

Installing Samsung Software (SF-531P only)

This chapter provides information on installing the supplied Samsung software. You **MUST** install the Samsung software to use your machine as a printer and scanner.

The topics included in this chapter are:

Samsung SmarThru

- About Samsung SmarThru Software

Installing Software

- System Requirements
- Installing the Samsung Software
- Configuring the Fax Gate on Your PC
- Configuring the Internet Gate on Your PC
- Using Your machine with a USB Cable
- Installing Bonus Software
- Making Installation Diskettes
- Installing Software from Diskettes
- Un-installing Samsung Software

Samsung SmarThru

About Samsung SmarThru Software

You must to install the SmarThru CD-ROM after you have setup your machine and connected it to your computer. The SmarThru CD-ROM includes the following:

- MFP Driver
- USB Driver
- SmarThru Software
- OCR Software (AnyPage Lite)
- Acrobat Reader (Bonus Software)

MFP Driver

To use the SF-530 series as a printer, scanner, or to send and receive electronic faxes, you **MUST** install the MFP driver.

USB Driver

To use the SF-530 series connected to your computer using a USB cable, you **MUST** install the USB driver and set the USB port.

SmarThru Software

SmarThru consists of several components, each of which provides a particular function:

MailBox – Working with e-mail and fax messages, you can create, send, browse and store messages.

Image Manager – Working with images, you can import, export, store and operate on images.

Scan Manager – Working with documents or images, you can scan to Image Manager, scan to OCR software, or to a fax.

Copy Manager – Working with documents or images, you can control a copying process. You can also save a copy of the image or document to Image Manager.

Image Viewer – Working with documents or images, you can view images in a variety of graphical formats.

OCR Software (AnyPage Lite)

OCR (Optical Character Recognition) is the software that has the ability to recognize most character formats, so that a scanned document can be read and edited on your word processor.

Acrobat Reader

This bonus program allows you to view and print Adobe P.D.F files on all major computer platforms.

Installing Software

System Requirements

Before you begin, ensure you have the following computer setup:

Minimal requirements:

- **Operating systems**: Windows 95 OSR2/Windows 98/Windows 98 SE/Windows Me/Windows NT 4 Workstation or Server with Service Pack 3/Windows 2000
- **Disk space:** 120 MB for installation
- **Memory:** 32 MB
- **CPU:** Pentium 133
- **Required software:** Internet Explorer 4.01
- **User rights:** Administrative rights should be set for installation on Windows NT and Windows 2000.

Recommended

- **Operating systems:** Windows 98/Windows 98 SE/Windows Me/Windows NT 4 Workstation or Server with Service Pack 5/Windows 2000
- **Disk space:** 120MB for installation, 100MB for message/image database
- **Memory:** 32MB for Windows 9x, 64MB for Windows NT
- **CPU:** Pentium II 200
- **Required software:** Internet Explorer 4.01 or 5.0
- **User rights:** Administrative rights should be set for installation on Windows NT and Windows 2000.

Note: Windows 95 versions prior to OSR2 are not recommended due to compatibility with OLE/COM libraries.

Installing the Samsung Software

Note: For Windows 95/98 users, close “New Hardware Found” screen when the computer boots up.

1. Insert the supplied CD-ROM into your CD-ROM drive.

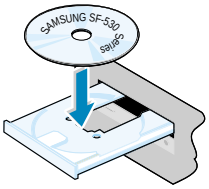

The SmarThru CD-ROM is automatically running and the opening window appears.

If the opening window does not appear, click **Start**, and then **Run**. Type **X:Setup.exe**, replacing “**X**” with the letter of your drive, and click **OK**.

2. When the opening screen appears, click on **SF-530 Series**, then the language you want to use.

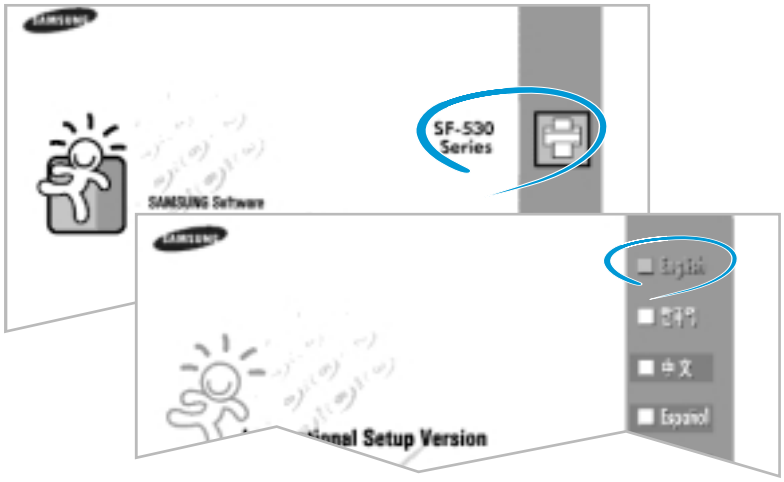

3. Click **Install the Samsung Software on your PC**.

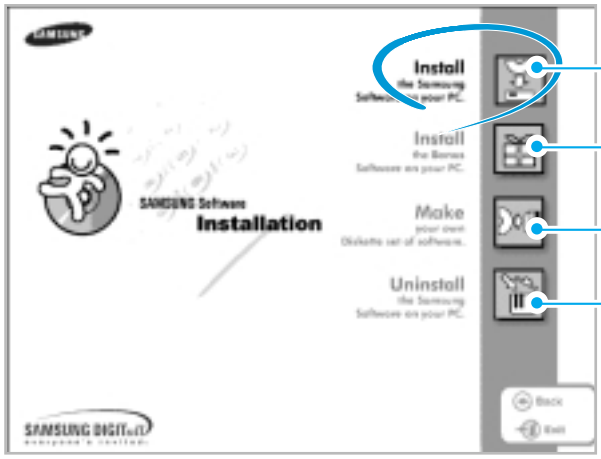

Installs the Samsung Software on your PC.

Installs Acrobat Reader on your PC. See page 2.16.

Makes the software diskette. See page 2.16.

Uninstall the Samsung Software. See page 2.21.

4. Follow the on-screen instructions and click **Next**.

5. The SmarThru installation supports three types of setup:
   - **Typical**: Program will be installed with the most common options and is recommended for most users.
   - **Compact**: Only the MFP driver will be installed.
   - **Custom**: You may choose the options you want to install. Recommended for advanced users.

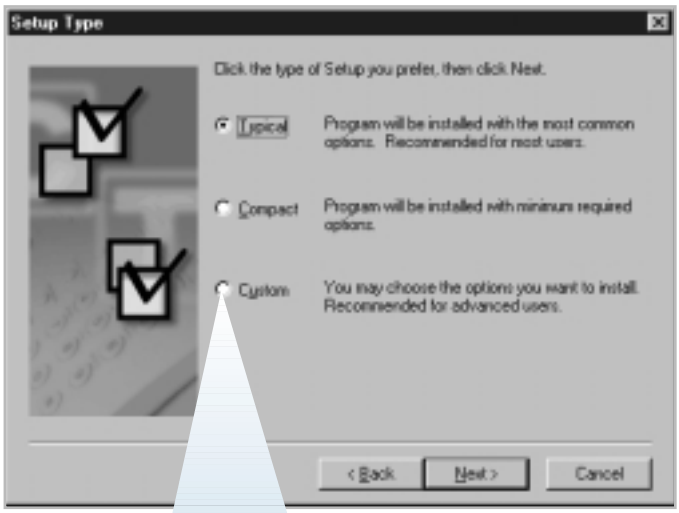

If you select the **Custom** installation, you may choose the options you want to install.

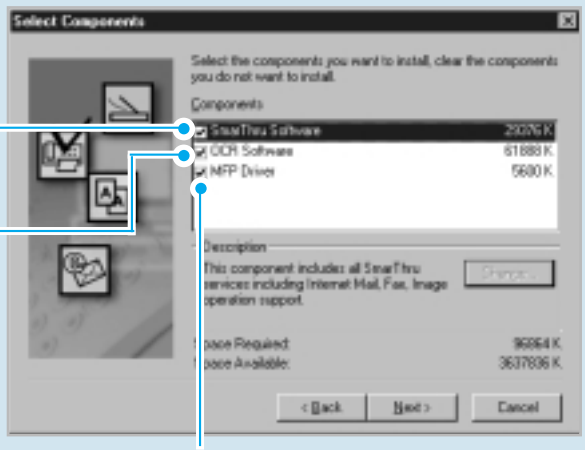

SmarThru software to scan and edit images and work with electronic documents.

AnyPage Lite software to enable OCR.

MFP driver to print, scan, or to send and receive PC faxes.

6. Click **Next**.

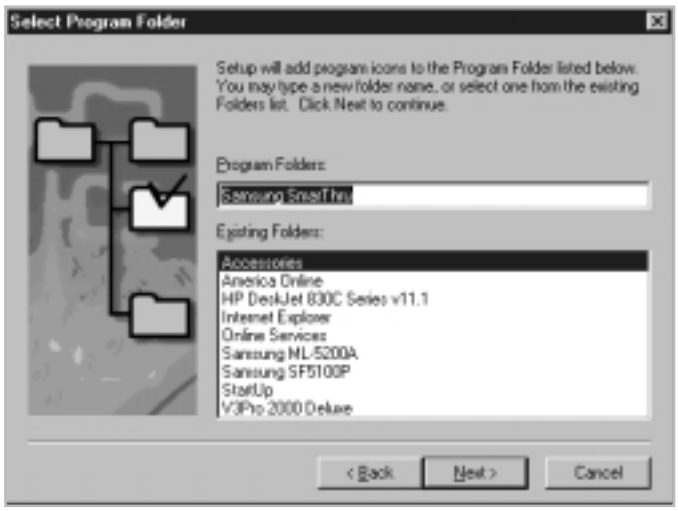

7. When the installation is completed, The message box recommends you restart your computer. Click **Finish**, then Windows restarts.

   If your computer does not shut down and restart automatically, you must shut it down manually and restart for the changes to saved.

Note: If you are using Windows NT or Windows 2000, the warning message may appear when your computer boots up, telling you cannot install the fax driver on your computer. Click **OK** and continue the following steps.

Configuring the Fax Gate on Your PC

1. After installing the SmarThru software, Windows will automatically restart. When you see the Samsung SF-530 Series Program folder, close it by clicking [X] on the right-top of the window.

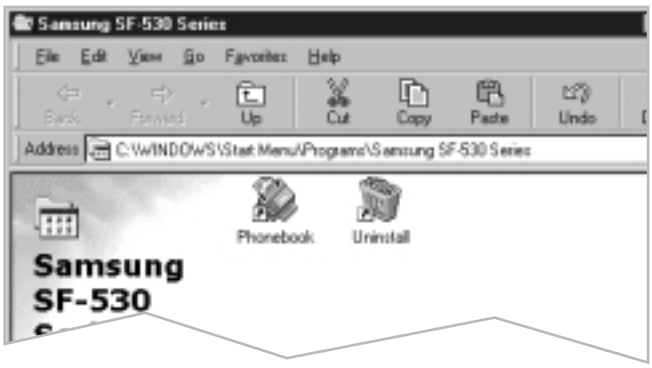

2. The SmarThru Add New Fax Modem dialogue box appears. Click **Next**.

To add a fax modem later or you do not want to have fax service using the SmarThru system, press Cancel, and go to page 2.9 to configure the Internet gate.

3. Choose **SAMSUNG FaxThru Modem** from the list. It will be used by SmarThru Fax Gate for sending and/or receiving PC faxes. Then, click **Next**.

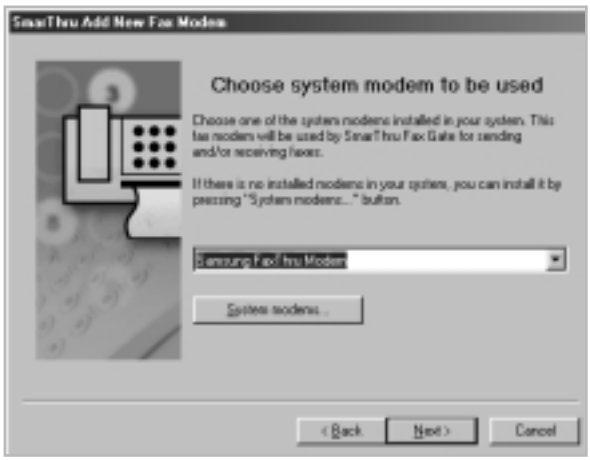

Note: The Windows NT or Windows 2000 users must click **System modems...** to open Install New Modem dialogue box. Follow the instructions on screen to install fax modem on your computer.

4. Enter your fax number or name in the Fax identifier box, and click **Next**.

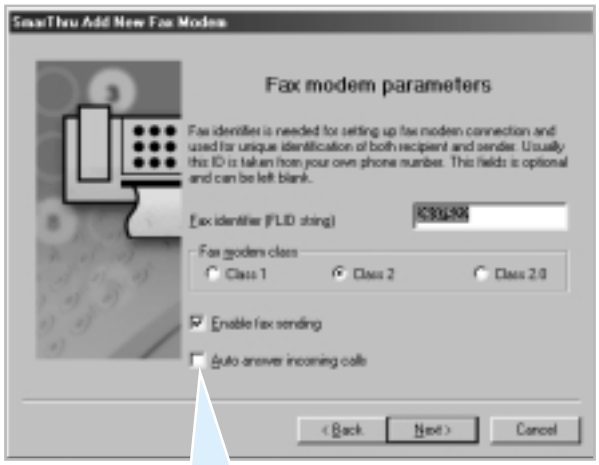

If you put a check mark in this box, the SmarThru system will automatically will receive incoming calls. If you want to receive faxes at the SF-530 series, clear this box.

5. When you are finished, click **Finish**.

Note: To edit the advanced properties of Fax service or to add other modems, choose **SmarThru Configuration** from the **Tools** menu when you run the **Samsung SmarThru2**. For details, refer to the SmarThru User's Guide.

Configuring the Internet Gate on Your PC

When the fax modem configuration is complete, the SmarThru software loads the Internet Gate sets up your internet connection.

Note: To configure the internet gate of the SmarThru system, you must enter your e-mail address, SMTP/POP3 server address, POP3 account name and password. Ask your Internet Service Provider or online service provider about the information on your internet gate configuration.

1. The SmarThru Internet Gate Configuration Wizard dialogue box appears. Select the way you are connected to the Internet, then click **Next**.

   If you are connected to the Internet over a LAN (i.e. in an office network environment), select **Connection to Internet over LAN**, and skip to Step 4.

   If you use dial-up for Internet connection, select **Use Dial-Up for Internet Connection**, and proceed to the next step.

2. If you use a phone line for your Internet connection, configure Dial-Up settings using Windows Dial-Up Networking setup wizard. Click **Configure**.

3. Click **Add**. The dial-up connections which are already set up on your computer are displayed. Select one from the list you want to use for Internet connection on the SmarThru system, then click **OK**.

If no connection is available, you cannot use the system Dial-Up in the Samsung SmarThru system.

To modify the Dial-Up connection properties, click **Dialing Properties**.

Note: For details on the Dial-Up Configuration using the Windows Dial-Up Networking setup wizard, please refer to your Windows documentation.

4. Enter your name and e-mail address, then click **Next**. The e-mail address has been assigned to you by your Internet service provider.

5. Enter the addresses of your incoming and outgoing mail servers. Choose the incoming mail server type, then click **Next**. Your Internet service provider must provide you this information.

6. Enter your account name and password to access your Internet mail server, then click **Next**. Your Internet service provider will provide this information.

7. Enter the account record name, then click **Next**.

8. Click **Finish** to enable Internet e-mail service.

Note: If you wish, you can enable or reconfigure the Internet connection later. Open the **Samsung SmarThru2**, and select **SmarThru Configuration** from the **Tools** menu. For details, refer to the SmarThru User's Guide.

Using Your Machine with a USB Cable

If you have a USB (Universal Serial Bus) port enabled on your computer, and if your computer is running Windows 98, you can connect your SF-530 series to the USB chain of devices.

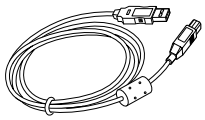

Note: To connect the printer to the USB port of the computer requires a certified USB cable. You will need to buy the USB 1.0 compliant cable.

Installing MFP Driver

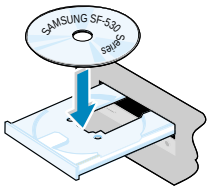

To operate your printer with Windows PC, you must install the MFP driver. Place the CD-ROM in the CD-ROM drive and perform the instructions on page 2.4.

Connecting Your Machine with USB Cable and Installing USB Driver

1. Make sure that both the printer and computer are turned ON.

2. Plug one end of the USB cable into the USB port on the printer and the other end into the USB port ( ) on the computer.

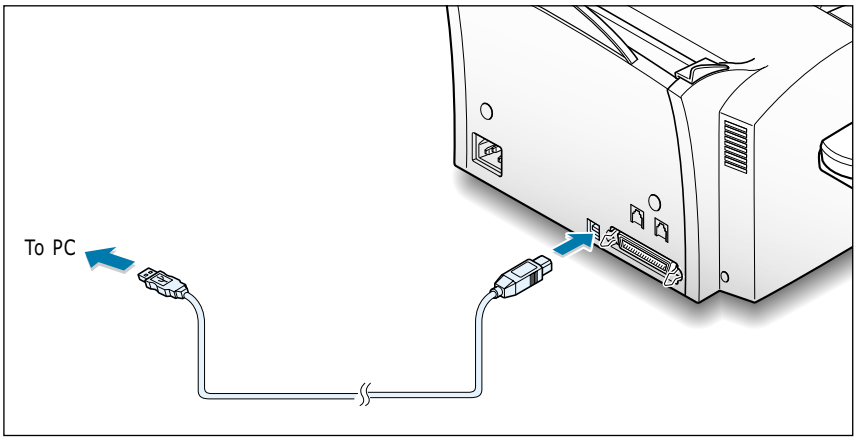

3. The Add New Hardware Wizard dialogue box appears. Click **Next**.

4. Check **Search for the best driver for your device** and click **Next**.

5. Check CD-ROM drive and click **Browse**, then choose **x:\530\Eng \USB** (where x is the drive letter for the CD-ROM drive).

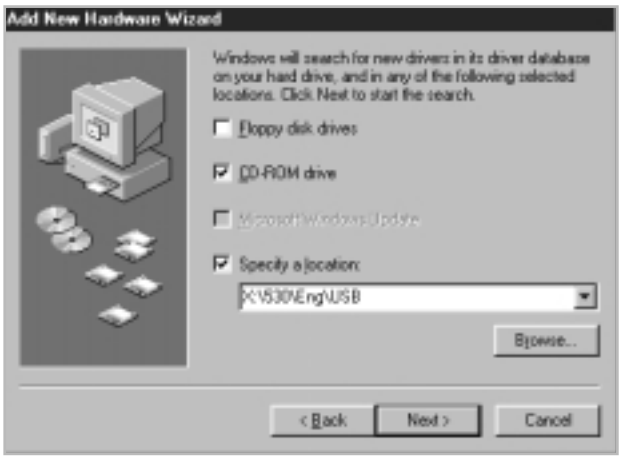

6. Click **Next**. The USB driver will be installed.

7. Follow the instructions on the screen to complete the installation.

Setting Your PC Printer Port

1. From Window's **Start** menu, select **Settings**, then select **Printers**.

2. Select the Samsung SF-530 series printer icon in the Printers folder.

3. Select **Properties** from the **File** menu.

4. Click the **Details** tab. Select **SSUSB: (SF-530 Series)** in the Print to the following port box. Click **OK**. The setup is now completed.

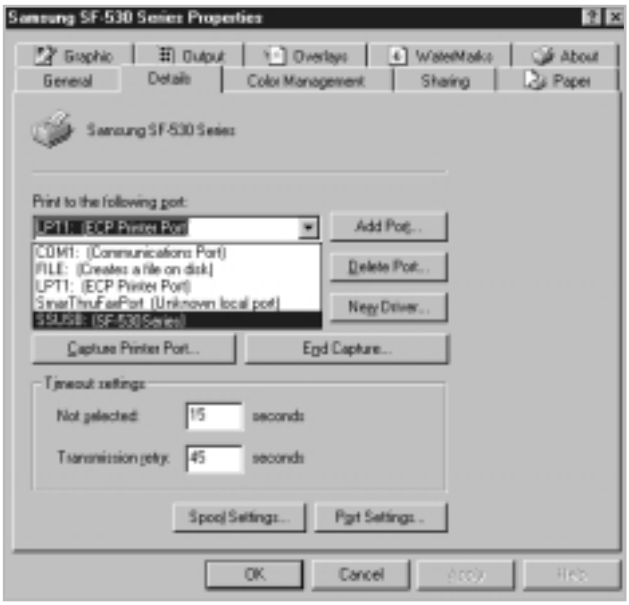

Installing Bonus Software

If you needed, you can install Acrobat Reader program on your PC.

1. Insert the SmarThru CD-ROM into your CD-ROM drive.

2. When the opening screen appears, select your machine's model, then the appropriate language.

3. Click **Install the Bonus Software on Your PC**.

4. Follow the on-screen instructions to complete the installation.

For details on Acrobat Reader, refer to the on-line help.

Making Installation Diskettes

If you do not have a CD-ROM drive and if you have access to another computer with a CD-ROM drive, you can copy software installation files from the Samsung software CD-ROM onto floppy diskettes. The diskettes can then be used instead of the CD-ROM to install the software.

To make the installation diskettes for an MFP drive, ensure you have several formatted diskettes ready, and follow these steps:

1. Insert the supplied CD-ROM into your CD-ROM drive.

   The SmarThru CD-ROM is automatically running and the opening window appears. (If the opening window does not appear, click **Start**, and then Run. Type **X:Setup**, replacing "**X**" with the letter of your drive, and click **OK**).

2. When the opening screen appears, lick on **SF-530 Series**, then the language you want to use

3. Click **Make your own Diskette set of software**.

4. The Copy to Floppy dialogue box appears. Click **Copy all disk images**.

   If you want to copy a portion of the selected component, select the disk image you want to copy in the Disk Images window, then click **Copy selected disk image**.

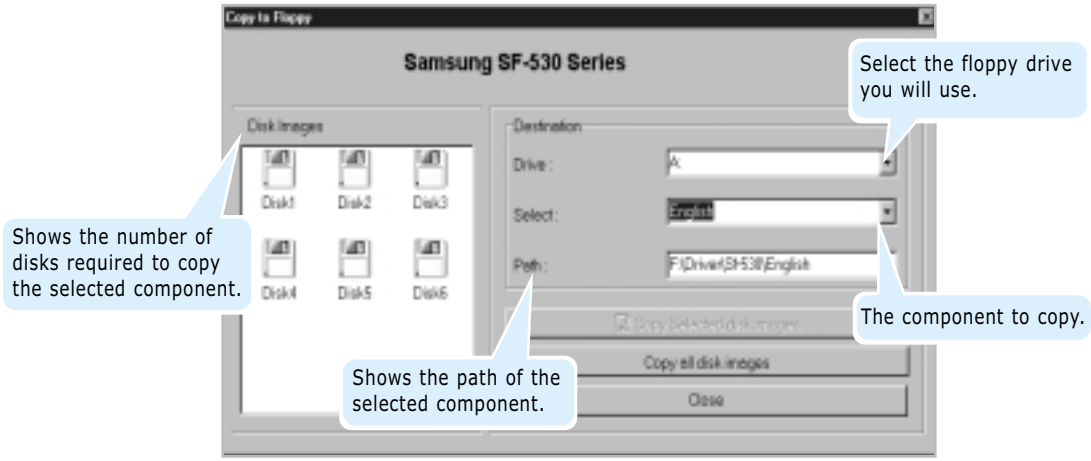

5. When prompted, insert a blank, formatted diskette into the floppy drive, and click **Yes** to copy the first diskette. When the first diskette is finished, you are prompted on the PC screen to insert disk 2.

   Label each diskette in the order you create it: MFP driver, disk 1 of 6, etc.

6. When the diskettes have finished copying, click **Close** in the Copy to Floppy dialogue box.

Installing Software from Diskettes

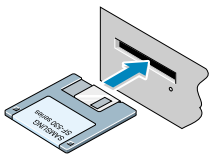

1. Insert the first diskette which contains the MFP driver.

2. From the **Start** menu, select **Run**.

3. Type **A:\setup.exe** in the Open box and click **OK**. (if your floppy drive is not **A**, substitute the correct letter.)

4. Follow the on-screen instructions to complete the installation.

Un-installing Samsung Software

Un-installing is required if you are upgrading the software or if your installation fails.

Note: Before beginning un-installation, ensure all applications are closed on your PC. A system reboot is required after the software is un-installed.

Un-installing the MFP Driver

1. Start Windows if not already started.

2. From the **Start** menu, select **Programs**, then select **Samsung SF-530 Series**, then select **Uninstall**.

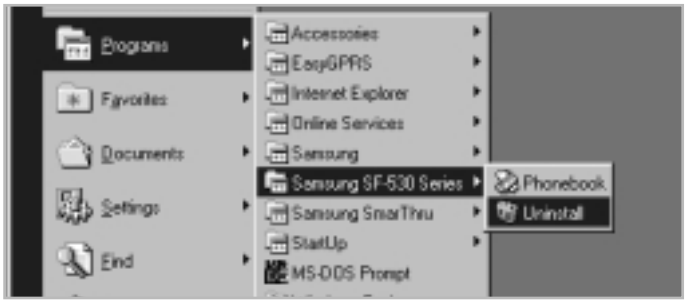

3. When your computer confirms your selection, click **Yes**. The printer driver and all its components are removed from your computer.

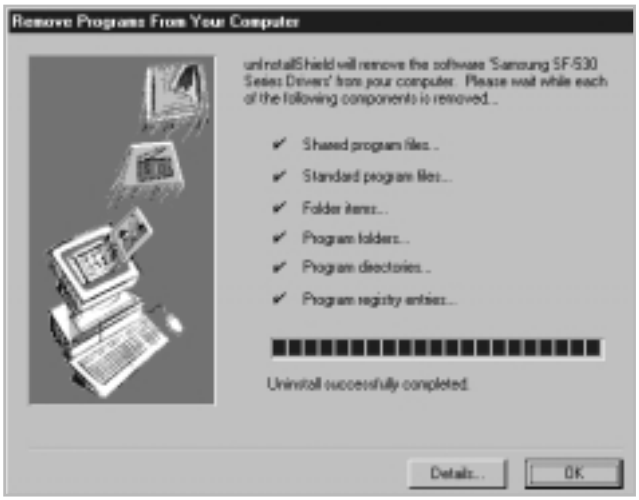

4. When un-installation is done, click **OK**.

5. The message box recommends you restart your computer. Click **OK**, then restart Windows.

Un-installing the SmarThru Software

1. Start Windows if not already started.

2. From the **Start** menu, select **Programs**.

3. Select **Samsung SmarThru**, then select **SmarThru 2 Uninstall**.

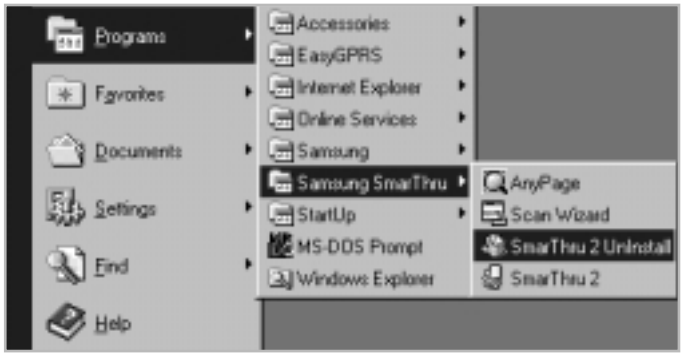

4. When your computer asks you to confirm your selection, click **Yes**. The Select Backup Options dialogue box appears.

5. To remove all messages and address book information from your hard drive, click **Clear All**, then **OK**. When the message box confirms your selection, click **Yes**.

To leave the information, put checkmarks on the check boxes to select options you want to leave or click **Select All**, then click **OK**. The backup proceeds. When the backup is done, click **Close**.

6. Follow the on-screen instructions to complete the un-installation. The SmarThru software and all components will be removed.

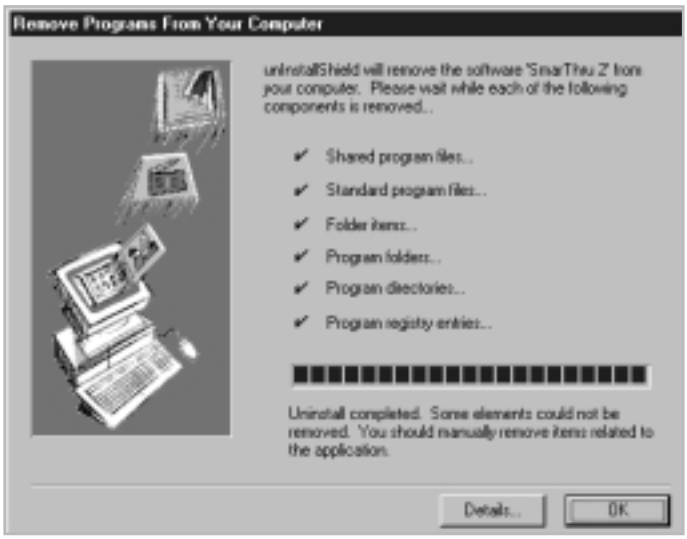

7. When un-installing is done, click **OK**. The message box recommends restarting your computer.

8. Click **OK**.

   Shut down and restart your computer to complete the un-installation process and save your changes.

Using the SmarThru CD-ROM

You can un-install both the MFP driver and the SmarThru software with the CD-ROM you have used to install the software.

1. Insert the SmarThru CD-ROM into your CD-ROM drive.

   The SmarThru CD-ROM is automatically running and the opening window appears. (If the opening window does not appear, select **Run** from the **Start** menu, then type **X:SETUP**, replacing "**X**" with the letter of your drive and click **OK**.

2. When the opening window appears, lick on **SF-530 Series**, then the language you want to use.

3. Click **Uninstall the Samsung software on your PC**.

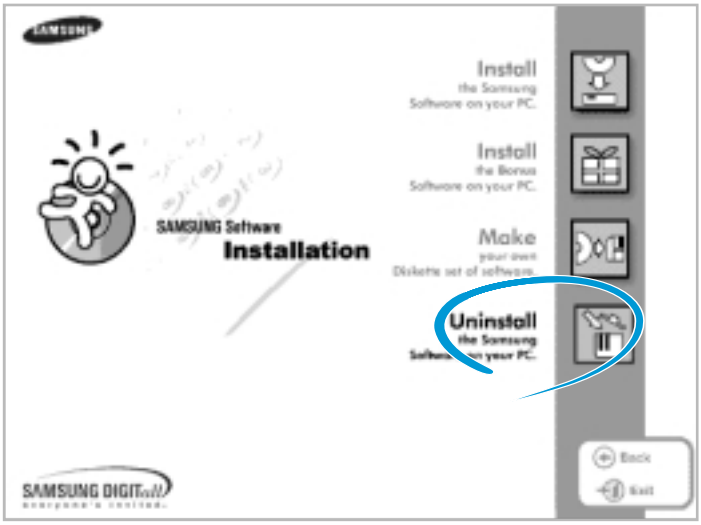

4. Follow the on-screen instructions to complete un-installation.

   You must shut down and restart your computer before changes you have made will be in effect.