Printing

Printing a Document

The following procedure describes the steps required for printing from various Windows applications. The exact steps for printing a document may vary depending on the application program. Refer to your software application's documentation for the exact printing procedure.

1. Start the program to create the document, and open the document you want to print.

2. Select **Print** from the **File** menu. You see the Print dialogue box for your application (the Print dialogue box for your application may look slightly different).

   The basic print settings you required are usually selected within the Print dialogue box. These settings include the number of copies, paper size, and page orientation.

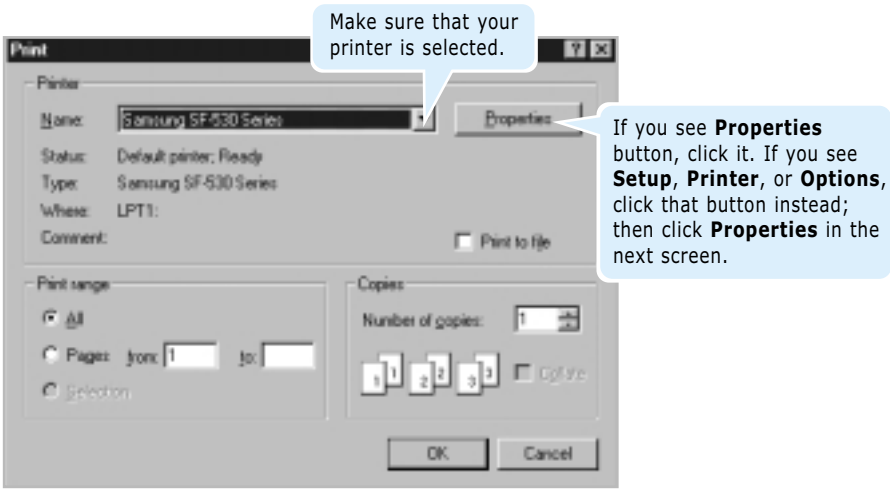

3. To take advantage of the printer features provided by the SF-530 series, click **Properties** in the application's Print dialogue box and go to step 4.

   If you see **Setup**, **Printer**, or **Options**, click that button instead. Then click **Properties** in the next screen.

4. The dialogue box allows you to access all information necessary for using your printer.

   If necessary, click the **Paper** tab to display the settings shown below. The Paper tab contains the options for setting the basic paper handling.

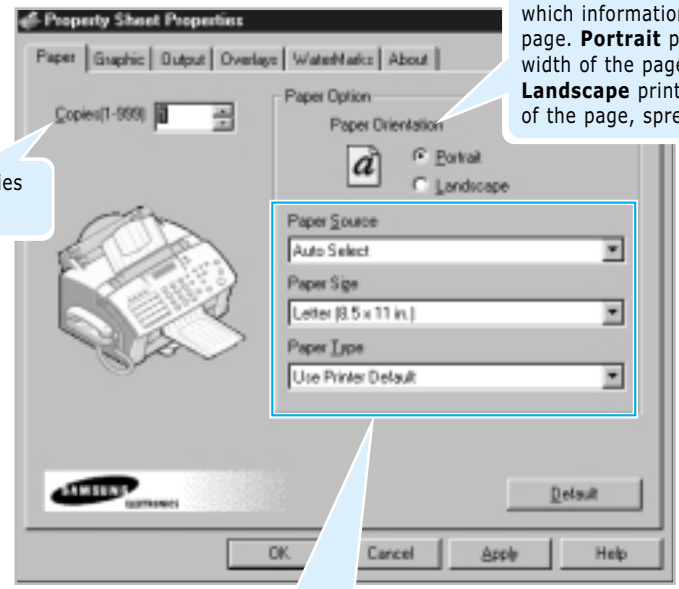

The **Paper Orientation** option allows you to select the direction in which information is printed on a page. **Portrait** prints across the width of the page, letter style. **Landscape** prints across the length of the page, spreadsheet style.

Select the number of copies to be printed.

- **Paper Source:** Make sure the **Paper Source** is set to **Auto Select**. If you use the manual input slot on the back of the printer (see page 5.6), select **Manual**.

- **Paper Size:** Select the paper size you have loaded in your printer. If you have a special size of paper to print on, select **Custom** and define its size in the custom paper size dialogue box. The minimum size you can use is 3 by 5 inches. The maximum size is 8.5 inches by 17 inches.

- **Paper Type:** The **Paper Type** option allows you to select the paper type you want to use.

5. If you want to change the setting for print quality, click the **Graphic** tab.

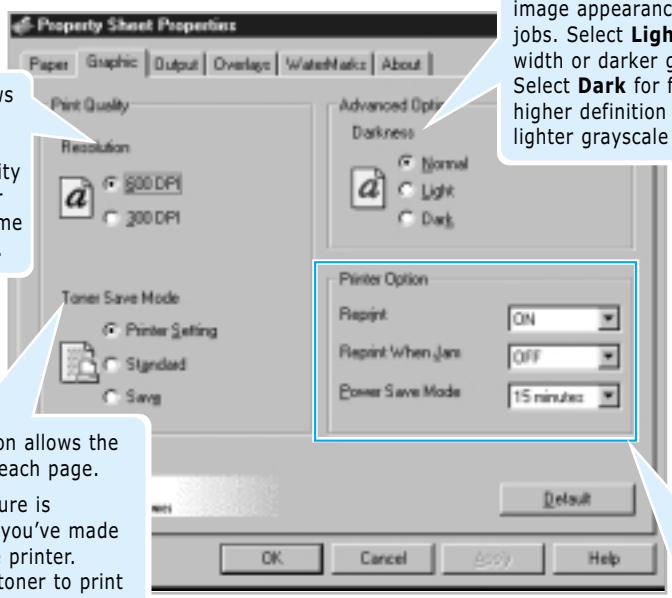

The **Resolution** option allows you to select the print resolution. The higher the setting, the sharper the clarity of printed characters. Higher settings may increase the time it takes to print a document.

You can lighten or darken the image appearance in your print jobs. Select **Light** for bolder line width or darker grayscale images. Select **Dark** for finer line width, higher definition in graphics, and lighter grayscale images.

The **Toner Save Mode** option allows the printer to use less toner on each page.

- **Printer Setting**: this feature is determined by the setting you've made on the control panel of the printer.
- **Standard**: does not save toner to print a document.
- **Save**: allows the printer to use less toner on each page.

Note: You can turn the this feature on or off by the **Toner** button on the front panel(see page 1.24). The setting on the printer's properties will override the setting on the front panel.

- **Reprint:** You can set the Reprinting feature to be used or not. For details on reprinting, see page 5.13.
- **Reprint When Jam:** With this option **ON**, the printer keeps the image for a printed page until the printer signals that the page has successfully exited the printer. If a paper jam occurs, the printer will automatically reprint all jammed pages after the jam is cleared.
- **Power Save Mode:** You can determine the length of time of the printer waits after a last job before it goes to a reduced power state. Select the desired length of time the machine waits. Selecting **OFF** will not use the Power Save mode.

Note: You can turn the this feature on or off by the **Power** button on the front panel(see page 1.24). The setting the printer's properties will override the setting on on the front panel.

8. When you complete changing print settings, click **OK** until you see the Print dialogue box again.

9. Click **OK** to start printing.

Notes:

- Most Windows applications will override settings you specify in the printer driver. Change all print settings available in the software application first, and any remaining settings with the printer driver.

- The settings you change here remain in effect while you are using the current program. **To make your changes permanent**, make them in the Printers folder as follows:

  1. Click the Windows **Start** button.

  2. Select **Settings**, then **Printers** to open the Printers window.

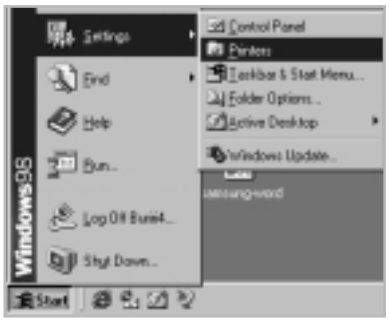

  3. Select the **Samsung SF-530 Series**.

  4. Click the right mouse button and select **Properties** to open the properties window.

Cancelling a Print Job

There are two ways to cancel a print job:

- If your print job has not started to print, cancel from the print spooler in Windows 95, 98, or NT 4.0.

- If your print job is currently printing, press **Stop** twice on the front panel of your printer.

CAUTION: If a fax job is currently being transmitted or received, this procedure will also clear it.

Printing Help

Samsung SF-530 series printer has the help screen that can be activated from the **Help** button in the printer properties dialogue box. These help screens give detailed information about the printer features provided by the SF-530 series printer driver.

From the upper right hand corner, click ? then click on a setting for more information.

To restore default printer properties setting when you change the print settings, click **Defaults** in the properties dialogue box.

Reprinting a Last Page

The Samsung SF-530 series printer's memory keeps always the last page of the last job until the printer signals that the paper exits successfully the printer. If you canceled a print job due to a paper jam or other problems and you want to know which page was printed lastly, reprint the last page.

Press **Copy/Reprint** on the front panel briefly in Standby mode.

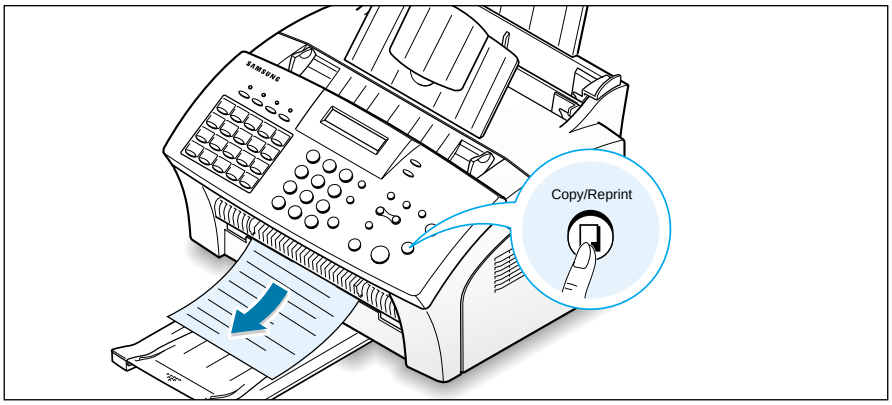

Note: If you want to prevent somebody from reprinting your document, you can turn the Reprinting feature off in the printer's properties dialog box. When you turn the feature off in the printer's properties, the **Copy/Reprint** button on the control panel does not perform the reprinting operation. To disable this feature, proceed as follows.

1. Access the printer properties referring to page 5.9.
2. From the **Graphic** tab, select **OFF** in the **Reprint** drop down list.

   When you want to reprint the last page on the control panel, you must select **ON** from the list.
3. Click **OK**.

Printing Several Pages Per Sheet

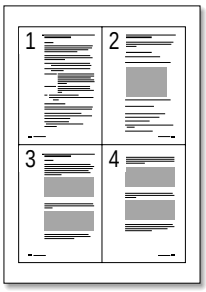

Your printer is equipped with an option that prints several pages on one sheet of paper by reducing the size of each page and organizing them in rows and columns.

1. Load letter or A4 paper into the paper input tray.

2. To change the print settings from your software application, access the printer properties. See page 5.9 to access the printer properties. From the **Paper** tab, select the paper orientation, source and size.

3. Click the **Output** tab, and choose **Multiple Pages Per Sheet** in the **Type** drop down list under the **Output Mode** section.

4. Select the number of pages to print per sheet (2, 4, 9, or 16) in the **Pages per sheet** drop-down list. When you make a selection, the graphic above the option changes to show how the printed page will look.

5. Click **Print Page Borders** when you want each page image in your document to print with a border.

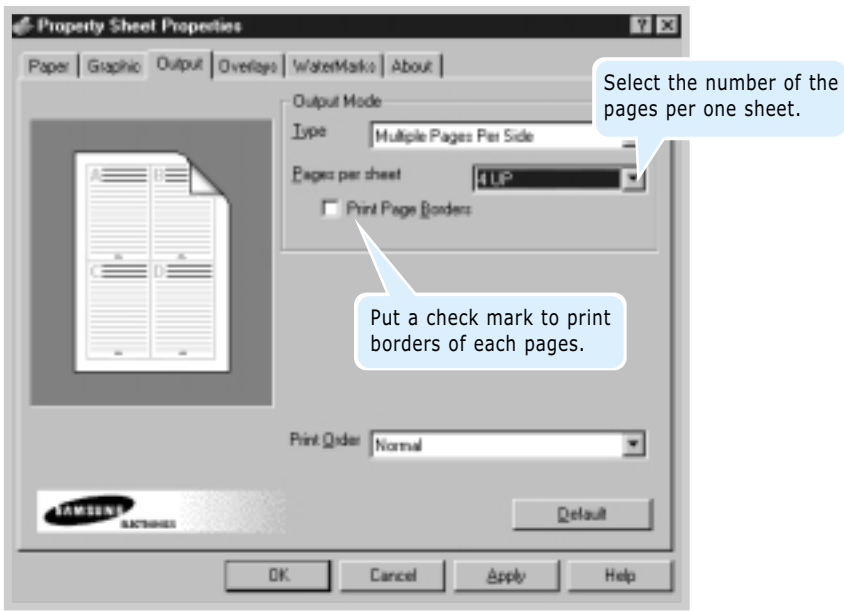

6. Click **OK**, then start printing.

Scaling Your Document

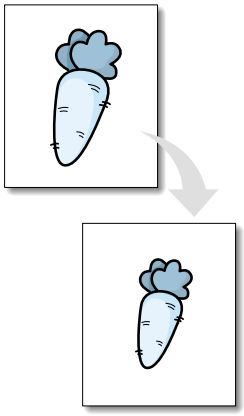

This printer feature allows you to scale your print job on a page.

1. When you change the print settings from your software application, access the printer properties. See page 5.9 to access the printer properties.

2. Click the **Output** tab, and select **Scale Printing** in the **Type** drop down list under the **Output Mode** section.

3. Enter the desired scaling rate in the Scale input field.

   You can also click the ▲ or ▼ buttons.

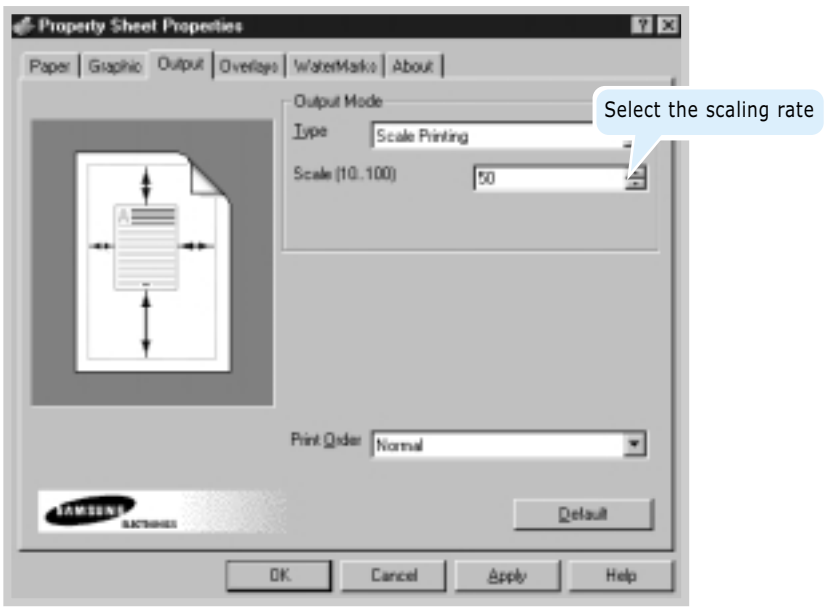

4. Click **OK**, then start printing.

Fitting Your Document To a Selected Paper Size

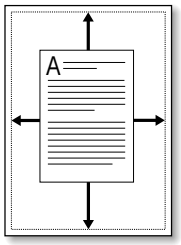

This printer feature allows you to scale your print job to any selected paper size regardless of the digital document size. This can be useful when you want to check fine details on a small document.

1. When you change the print settings from your software application, access the printer properties. See page 5.9 to access the printer properties.

2. Click the **Output** tab, and select **Fit to Page** in the **Type** drop down list under the **Output Mode** section.

3. You'll see the Application page size and be prompted to select the Fit to Paper Size. Select the correct size from the drop-down list.

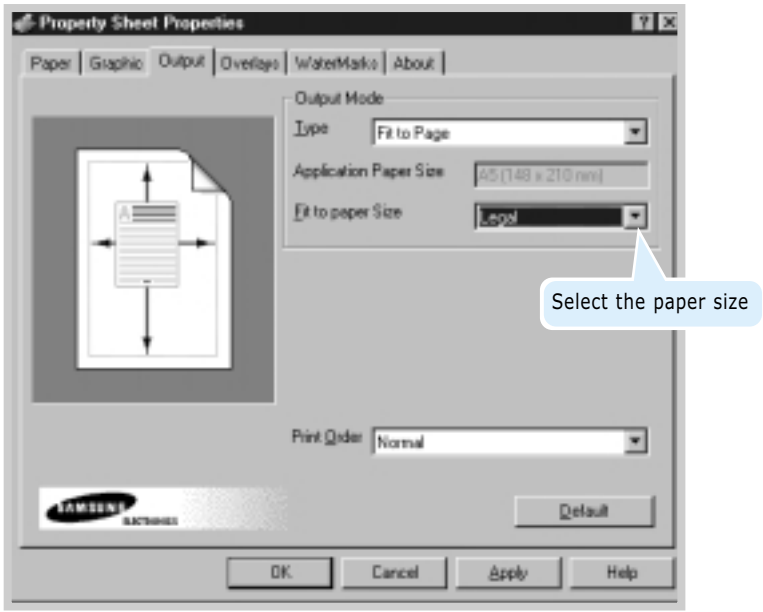

4. Click **OK**, then start printing.

Printing Posters

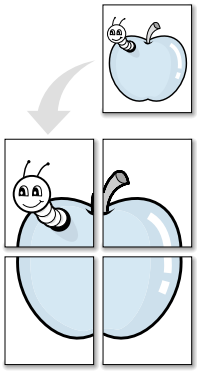

This feature allows you to print a single-page document onto up to 36 sheets of paper which can be pasted together to form one poster-size document.

1. To change the print settings from your software application, access the printer properties. See page 5.9 to access the printer properties.

   From the **Paper** tab, select the paper orientation, source and size.

2. Click the **Output** tab, and **Poster Printing** in the **Type** drop down list under the **Output Mode** section.

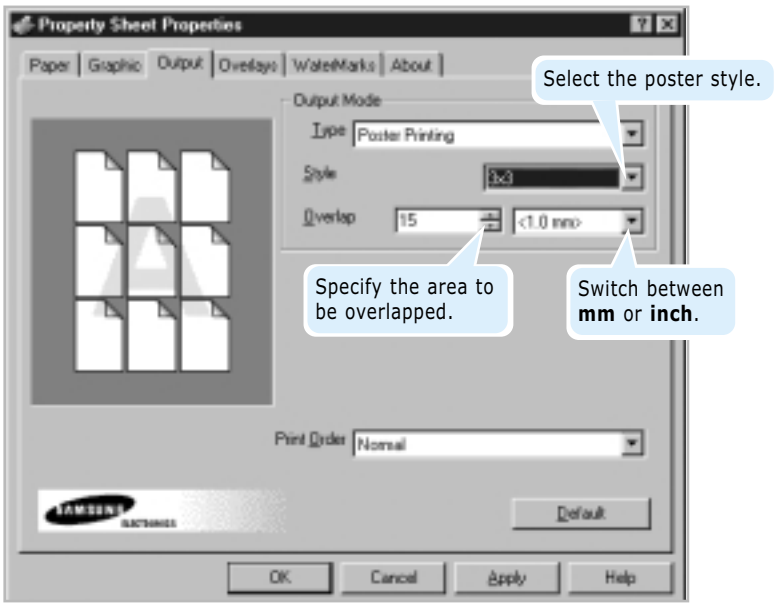

3. To determine the scaling factor, select the Style; 2x2, 3x3, 4x4, 5x5 or 6x6.

   For example, if you select 2x2, the output will be automatically stretched to cover 4 physical pages.

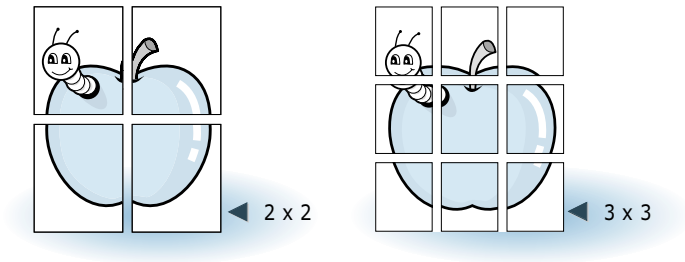

4. You may specify an overlap in millimeter or inch to make it easier to reconstruct the resulting poster.

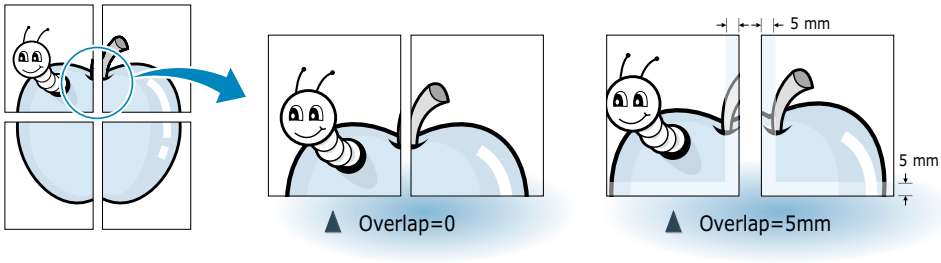

5. Click **OK**, then start printing.

Printing Watermarks

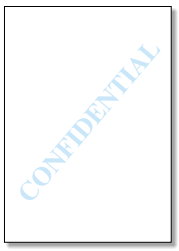

The Watermark option allows you to print text over an existing document. For example, you may want to have large gray letters reading "Draft" or "Confidential" printed across the first page or all pages of a document.

There are several predefined watermarks that come with the SF-530 series, and they can be modified or you can add new ones to the list.

To use an existing watermark

1. When you change the print settings from your software application, access the printer properties. See page 5.9 to access the printer properties.

2. Click the **Watermark** tab, and select the desired watermark in the **Message** drop-down list. You will see the selected watermark in the preview window.

3 Click **OK**, then start printing.

To create or edit a watermark

1. When you change the print settings from your software application, access the printer properties. See page 5.9 to access the printer properties.

2. Click the **Watermark** tab, and enter the desired text message in the Text field. This will be displayed in the preview window. The preview window is provided so that you can see how the watermark will appear on the printed page.

3. Select the desired watermark options. You can select the font type and size, color and angle. There are three checkboxes at the bottom of the dialog box:

   - **Transparent Text** – Allows the document to show through the watermark.
   - **As Outline Only** – Prints the text outline of the watermark. This setting globally effects all watermarks in the list.
   - **On First Page Only** – Prints the watermark only on the first page.

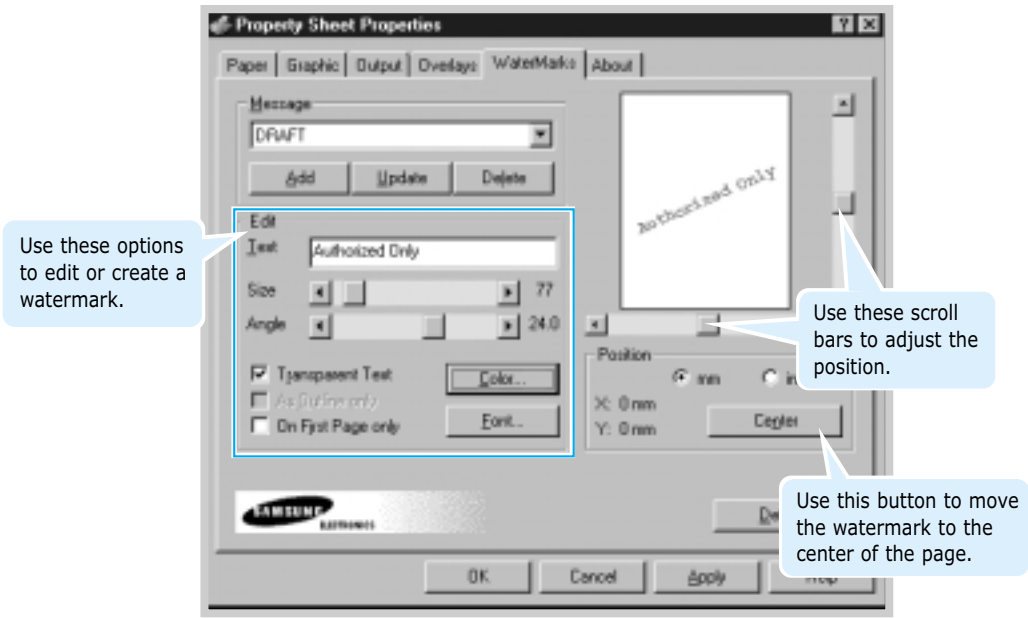

4. If you have created a new or edited an existing watermark, the **Add** and **Update** button is enabled.

   To add a new watermark to the list, click **Add**.

5. If you want to edit, select the desired watermark from the list, edit, then click **Update**.

6. When you complete the edit, click **OK**, then start printing.

To stop printing the watermark, select **None** in the Message drop-down list.

To delete a watermark

1. When you change the print settings from your software application, access the printer properties. See page 5.1 to access the printer properties.

2. From the Watermark tab, select the watermark you want to delete in the Messages drop-down list.

3. Click **Delete**.

4. Click **OK**.

Using Page Overlay

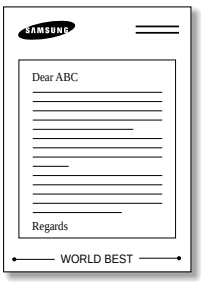

What is an Overlay?

An overlay is text and/or images stored in the computer HDD as a special file format that can be printed on any document you choose. Overlays are often used to take the place of preprinted forms and letterhead paper. Rather than using preprinted letterhead, for example, you can create an overlay containing the exact same information as is currently on your letterhead. Then when you want to print a letter with your company's letterhead, you do not need to load preprinted letterhead paper in the printer. You need only to tell the printer to print the letterhead overlay on your document.

Creating a New Page Overlay

To use a page overlay, you must create a new page overlay containing your logo or image.

1. Create or open a document containing a text or image you want to use for page overlay. Position the items exactly as you wish them to appear when printed as an overlay. If needed, save the file for later use.

2. Select **Print** from the **File** menu. Then click **Properties** in the application's Print dialog box to access the printer properties. For details, see page 5.9.

3. Click the **Overlays** tab, and click **Create Overlay**.

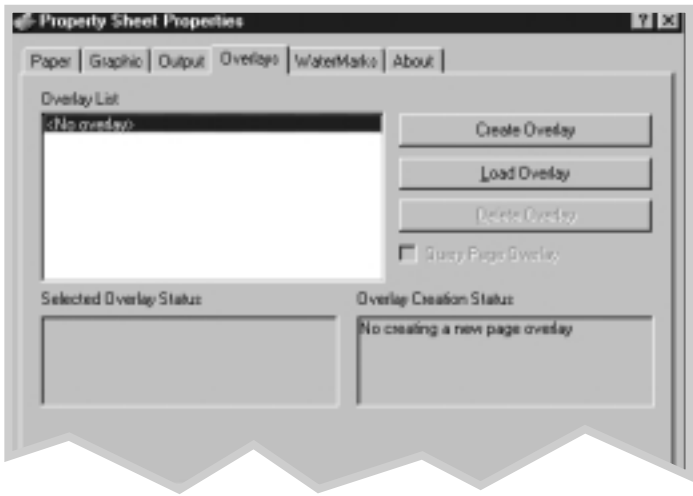

4. In the Create Overlay dialog box, type a name of up to eight characters in the File name box. Select the destination path if necessary.

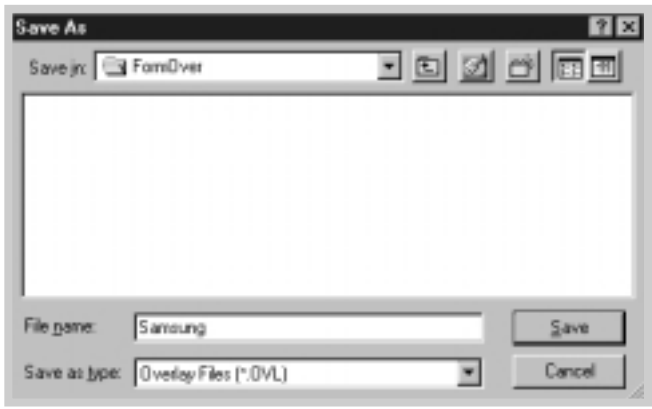

5. Click **OK**. You will see the name in the Overlay List box.

6. Click **OK** or **Yes** until you complete the creation.

   The file is not printed out. Instead it will be stored on your computer HDD disk.

Note: The overlay document size must be the same as documents you will print with the overlay.

Using Page Overlay

After an overlay has been created, it is ready to be printed with your document. To print an overlay with a document:

1. Create or open the document you want to print.

2. When you change the print settings from your software application, access the printer properties. See page 5.9 to access the printer properties.

3. Click the **Overlays** tab, and select the desired overlay from the Overlay List box.

4. If the desired overlay file does not appear in the Overlay List box, click **Load Overlay**, and select the overlay file.

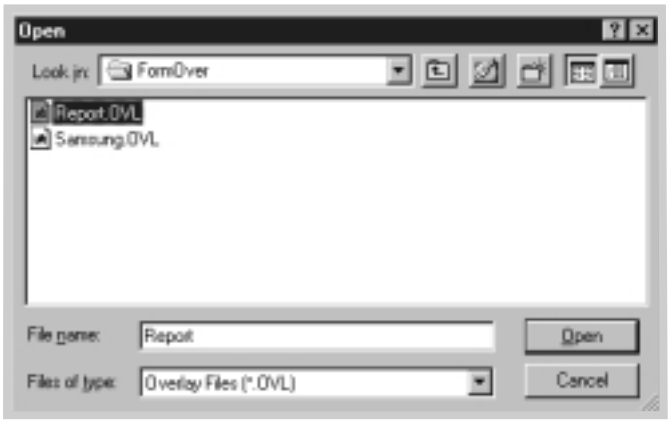

If you have stored the overlay file you want to use into an external source, you can also load the file when you access this Load Overlay window.

After you select the file, click **OK**. The file is now shown in the Overlay List box and is available for printing. Select the overlay from the Overlay List box.

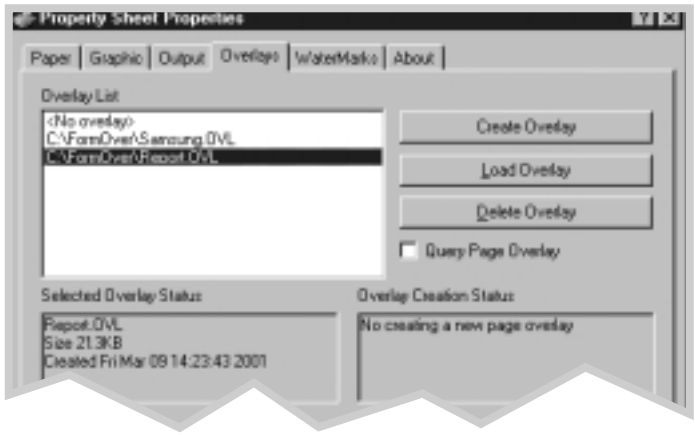

5. If necessary, click the **Query Page Overlay** check box. If this box is checked, a message box will appear each time you submit a document for printing, asking you to confirm your wish to print an overlay on your document.

   Answering **Yes** to the message box means that the selected overlay will be printed with your document.
   Answering **No** to the message box cancels overlay printing.

   If this box is empty, and an overlay has been selected, the overlay will be automatically printed with your document.

6. Click **OK** or **Yes** until the printing starts.

   The selected overlay will be downloaded with your print job and printed on your document.

Deleting a Page Overlay

You can delete page overlays that are no longer used.

1. In the printer properties dialog box, click the **Overlays** tab.

2. Select the overlay you want to delete from the Overlay List box.

3. Click **Delete Overlay**.

4. Click **OK** until you exit the Print dialog box.

Printing in a Network Environment

If you work in a network environment, you can connect your SF-530 series printer directly to a selected computer (called the "host computer") on the network. The printer can then be shared by other users on the network through a Windows 9x, 2000 or NT 4.0 network printer connection.

Note: You need to install the Samsung SF-530 Series printer driver on each computer that will print documents to the printer.

Setting Up Host Computer

1. Start Windows.
2. From the **Start** menu, select **Control Panel**, and double-click on the **Network** icon.
3. Check the **File and Print Sharing** box, then click **OK**. Close the window.
4. Click **Start** and select **Printers** from **Settings**, then double-click your printer name.
5. Select **Properties** in the Printers menu.
6. Click the **Sharing** tab, then check the **Shared As** box. Fill in the **Shared Name** field, then click **OK**.

Setting Up Client PC

1. Right-click the **Start** menu, and select **Explorer**.
2. Open your network folder in the left column.
3. Right-click the shared name, and select **Capture Printer Port**.
4. Select the port you want, check the **Reconnect at log on** box, then click **OK**.
5. From the **Start** menu, select **Settings**, then **Printers**.

6. Double-click your printer icon.

7. From the **Printers** menu, select **Properties**.

8. Press the **Details** tab, select the printer port, then click **OK**.

Printing a Document

Print your document following the procedures described in page 5.9.

chapter 6

Maintenance

This chapter provides suggestions for high-quality and economical operating and information for maintaining the toner cartridge and the machine.

The topics included in this chapter are:

- Guidelines for Maintenance
- Clearing Memory
- Clearing the OPC Drum
- Adjusting Shading
- Setting the Machine to be checked by Phone
- Sending Toner Low Information to the Service Company
- Cleaning the Machine
- Caring for the Toner Cartridge

Guidelines for Maintenance

For optimal performance of the SF-530 series, follow these guidelines:

- Place the machine on a stable surface.
- Do not install your machine near devices that contain magnets or generate magnetic fields, such as speakers.
- Keep your machine clean. Dust accumulation can prevent the unit from operating properly.
- For your safety, unplug the power cord from the machine during electrical storms.
- Lift the machine from the bottom only. Do not lift the unit by the front panel or any of the trays.

Clearing Memory

You can selectively clear information stored in your machine's memory.

1. Press **Setup** on the control panel. The display shows the first menu; FAX NUMBER/NAME.

2. Press ◄ or ► until 'MEMORY CLEAR' appears, then press **Start/Enter**. The display shows the items you can clear.

   - **FAX NUMBER/NAME**: your fax number and name are cleared from the machine's memory.
   - **DIAL/SCHEDULE**: clears the one-touch, speed dial, or group dial numbers stored in the memory. In addition, all the Schedule Job operations you have reserved are also cancelled.
   - **E-MAIL INFORM**: clears all the registered e-mail transmission and reception information.
     (on SF-535e)
   - **JOURNAL**: clears all records of transmissions & receptions.
   - **DEFAULT SETUP**: restores all the option settings to factory default.

3. Press ◄ or ► until you find the item you want to clear, then press Start/Enter. The display asks you to confirm your selection.

4. Press **Start/Enter** to confirm. The selected memory is cleared, then the display asks you to continue clearing the next item.

5. Repeat steps 3 through 5 to clear another item.

   Or, to return to Standby mode, press **Stop**.

Cleaning the OPC Drum

If you are getting streaks or spots on your print, you may clean the OPC drum.

1. Make sure that the paper is loaded in the automatic input tray.

2. Press **Setup** on the control panel.
   The display shows the first setup menu; FAX NUMBER/NAME.

3. Press ◀ or ▶ until 'MAINTENANCE' appears, then press **Start/Enter**.

4. The display shows the first menu, 'CLEAN DRUM', then press **Start/Enter**.

   The machine automatically pulls in a sheet of paper, and prints it out. The toner particles on the OPC drum surface are fixed to the paper.

5. Press **Stop** to return to Standby mode.

Adjusting Shading

The scanning unit becomes dirty, it can alter the shading value. If your print has black lines or is blurred, adjust the shading setting. Take the following steps:

1. Load a sheet of white paper into the document feeder.

2. Press **Setup** on the front panel.
   The display shows the first setup menu; FAX NUMBER/NAME.

3. Press ◀ or ▶ until 'MAINTENANCE' appears,then press **Start/Enter**.
   The display shows the first menu; CLEAN DRUM.

4. Press ◀ or ▶ until you find 'ADJUST SHADING', then press **Start/Enter**.

   The white paper is scanned through the document feeder.

Setting the Machine to be Checked by Phone

The Remote Test feature allows your machine to be checked out by a service company at a remote place by phone.

1. Press **Setup** on the control panel.
   The display shows the first setup menu; FAX NUMBER/NAME.

2. Press ◀ or ▶ until 'MAINTENANCE' appears, then press **Start/Enter**.
   The display shows the first menu; CLEAN DRUM.

3. Press ◀ or ▶ until you find 'REMOTE TEST', then press **Start/Enter**.

4. Press ◀ or ▶ to turn this feature ON or OFF, then press **Start/Enter**.

   If you want to protect your machine from being opened by an unauthorized person, select OFF.

5. Press **Stop** to return to Standby mode.

Sending Toner Low Information to the Service Company

If you have set this Notify Toner Low menu option to ON, when the toner cartridge needs to be replaced, your machine automatically sends a fax to your service company or the dealer to notify them that your machine requires a new toner cartridge. This feature will be activated only when the phone number of the service company or the dealer is stored in your machine's memory by technician. Ask your dealer for more information.

1. Press **Setup** on the control panel.
   The display shows the first setup menu; FAX NUMBER/NAME.

2. Press ◀ or ▶ until 'MAINTENANCE' appears, then press **Start/Enter**.
   The display shows the first menu; CLEAN DRUM.

3. Press ◀ or ▶ until you find 'NOTIFY TONER LOW', then press **Start/Enter**.

4. Press ◀ or ▶ to turn this feature ON or OFF, then press **Start/Enter**.

5. Press **Stop** to return to Standby mode.

Cleaning the Machine

To maintain print quality, follow the cleaning procedures below every time the toner cartridge is replaced or whenever print quality problems occur. As much as possible, keep your machine free from dust and debris.

Note:
- Do not use ammonia-based sprays or volatile solvents such as thinner to clean the machine, as these can damage the machine's surface.
- While cleaning the inside of the machine, be careful no to touch the transfer roller (located underneath the toner cartridge). The oil from your hands on the roller can cause print quality problems.

Cleaning the Outside

Wipe the outside surfaces of your machine with a soft, clean, and lint-free cloth. You can dampen the cloth slightly with water, but be careful not to let any water drip onto the machine or inside it.

Cleaning the Inside

During the printing process, paper, toner, and dust particles can accumulate inside the machine. Over time, this buildup can cause print quality problems such as toner specks or smearing. Cleaning inside the printer will eliminate or reduce these problems.

1. Turn the machine off and unplug the power cord, then wait for the machine to be cool.

2. Pulling the cover release buttons toward you, open the cover and remove the toner cartridge.

   Note: To prevent damage to the toner cartridge, do not expose it to light for more than a few minute. Cover it with a piece of paper, if necessary.

3. With a dry, lint-free cloth, wipe away any dust and spiled toner from the toner cartridge area and the toner cartridge cavity.

Cleaning the Document Scanner

To keep your machine working properly, occasionally clean the white roller, ADF rubber, and the scanning glass.

Note: Do not turn the power off to clean the scanner, as documents stored in the memory will be lost.

1. Lift the front panel by grabbing the panel along the top edge and open the cover.

2. Disassemble the white roller as follows:
   Pull the handle of the bushing on the end of the roller slightly outward(A), rotate it until it reaches a slot(B), then pull the roller upward.

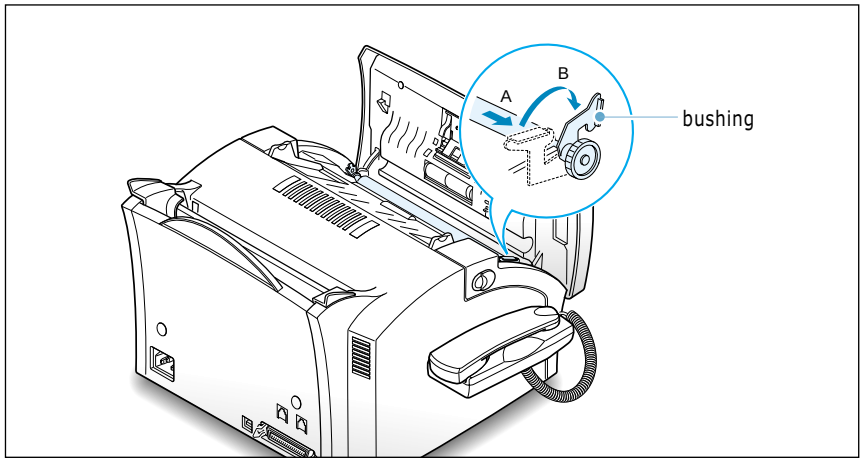

3. Wipe the roller surface with a soft cloth dampened with water.

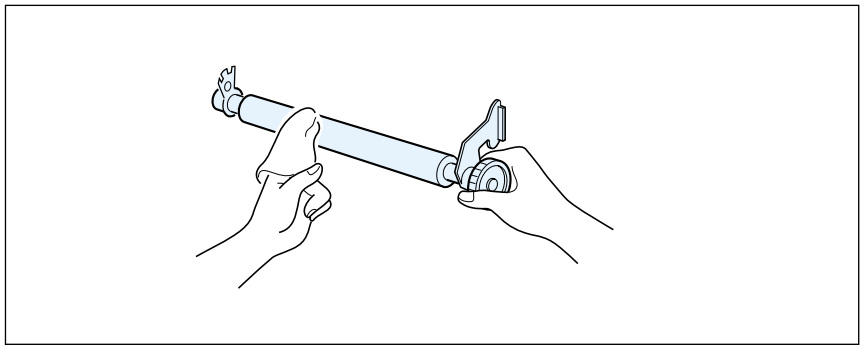

4. Clean the ADF rubber piece.

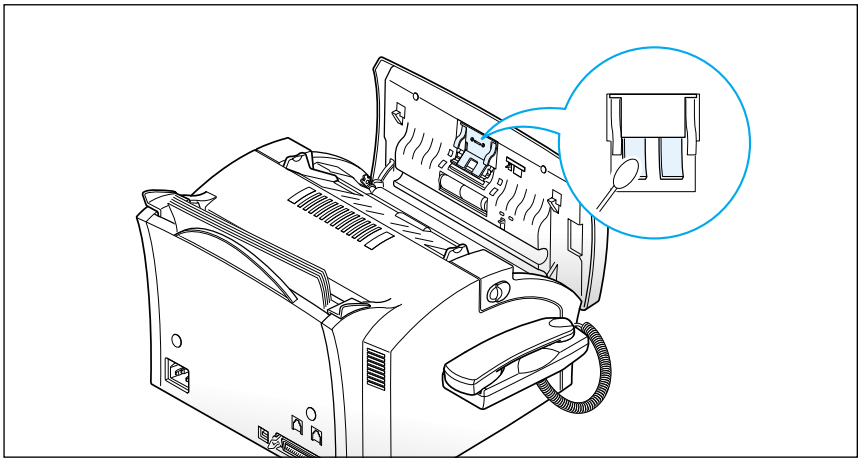

5. Carefully wipe the scanning glass with a soft, dry cloth.

   If the glass is very dirty, first wipe it with a slightly dampened cloth, then with a dry cloth. Be very careful not to scratch the glass surface.

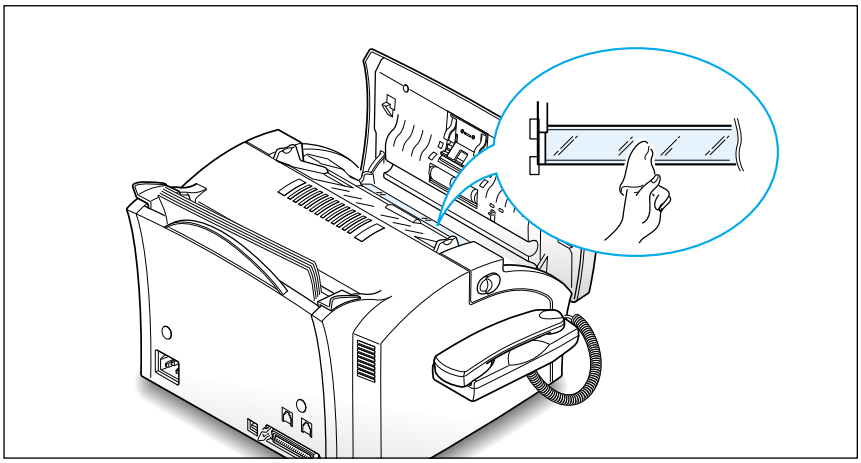

6. Replace the roller in reverse order, and then close the front panel firmly until it clicks into place.

Caring for the Toner Cartridge

Expected Cartridge Life

The life of your toner cartridge depends on the amount of toner used in each print job. For instance, when you print a typical business letter with about 5% page coverage, you can expect a toner cartridge life of approximately 2,500 pages (1,000 pages only for the toner cartridge shipped with your machine). The actual number may vary according to the print density of the page you print. If you print a lot of graphics, you may need to change the cartridge more often.

You can extend the life of your toner cartridge by using Toner Save Mode on the printer properties (page 5.11) or on the front panel (page 1.24). The Toner Save Mode uses less toner than normal printing. The printed image is much lighter, and is adequate for printing drafts or proofs.

Replacing the Toner Cartridge

When the toner cartridge is near the end of its life, white streaks or hue changes will occur. You can temporarily re-establish the print quality by re-distributing the remaining toner in the cartridge.

1. Open the cover and remove the toner cartridge.

2. Gently shake the cartridge to distribute the toner evenly inside the cartridge.

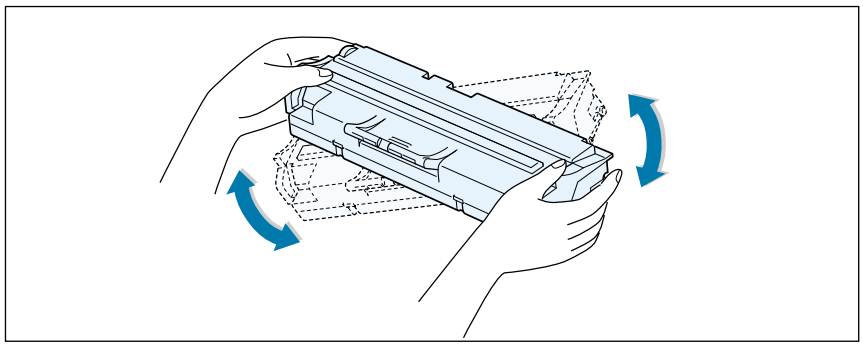

3. Reinstall the cartridge and close the cover.

This is typically successful one time only. When the toner eventually runs out, only blank pages will print when a print job is sent, or when a fax is received. At this stage, the toner cartridge needs to be replaced. See the following page.

Take the following steps to replace the toner cartridge:

1. Pulling the cover release buttons toward you, open the cover.

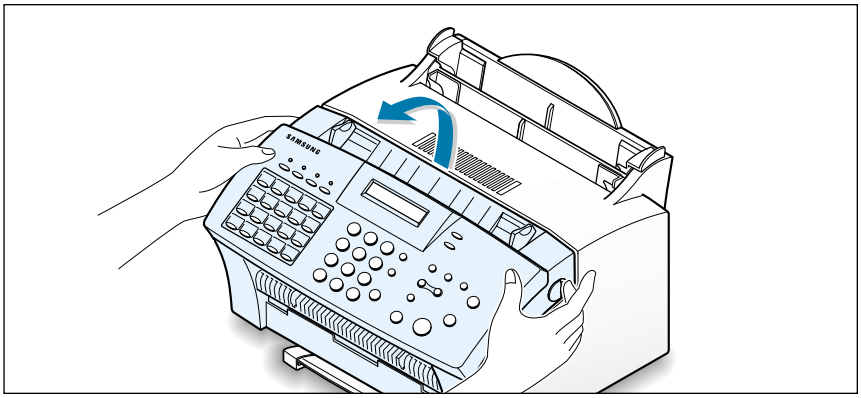

2. Remove the old toner cartridge. Follow the instructions printed on the cartridge box to recycle the used cartridge.

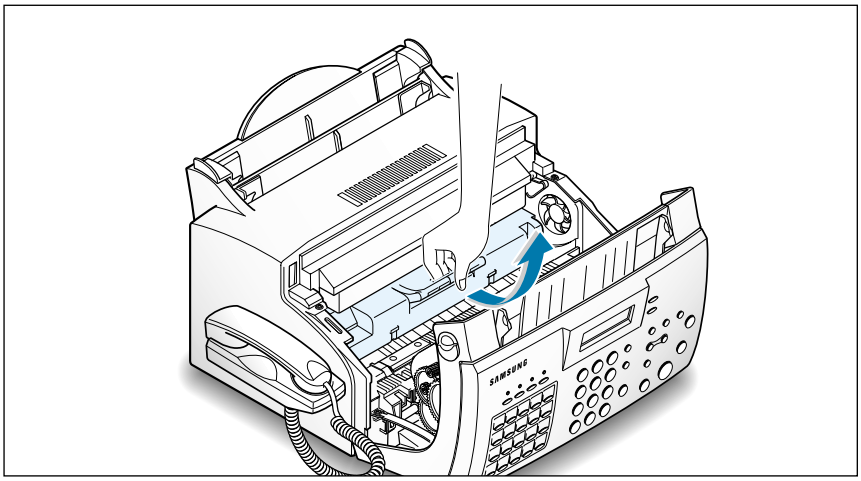

3. Unpack a new toner cartridge from its plastic bag, and then remove the paper rolled the cartridge.

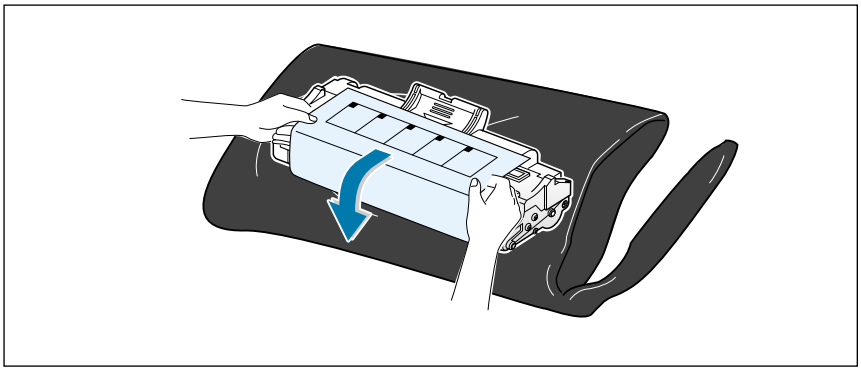

4. Shake the cartridge from side to side 5 or 6 times to distribute the toner evenly inside the cartridge.

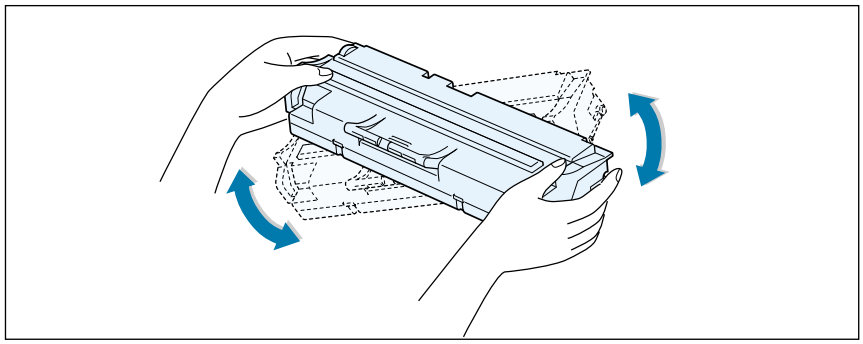

5. Find the cartridge slots inside the machine, one on each side. Grasp the handle and slide the cartridge down between the cartridge slots until it drops into place.

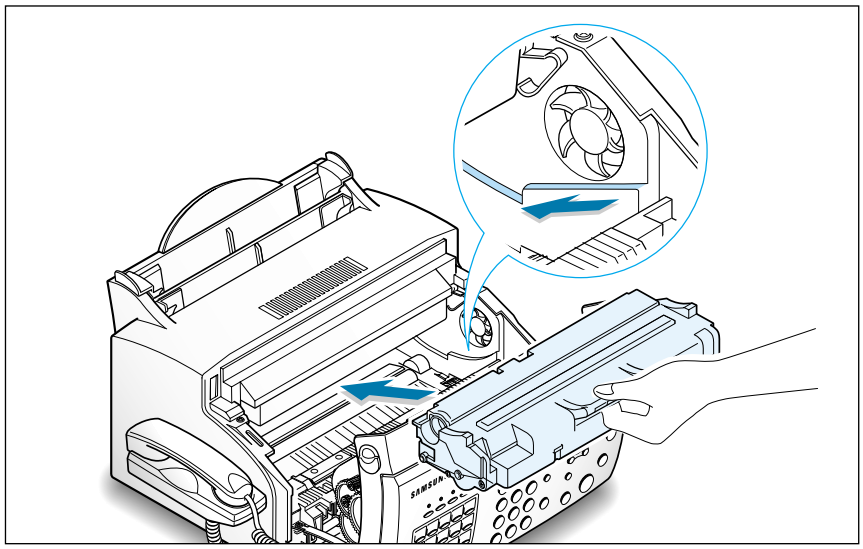

6. Close the cover firmly until it snaps closed.

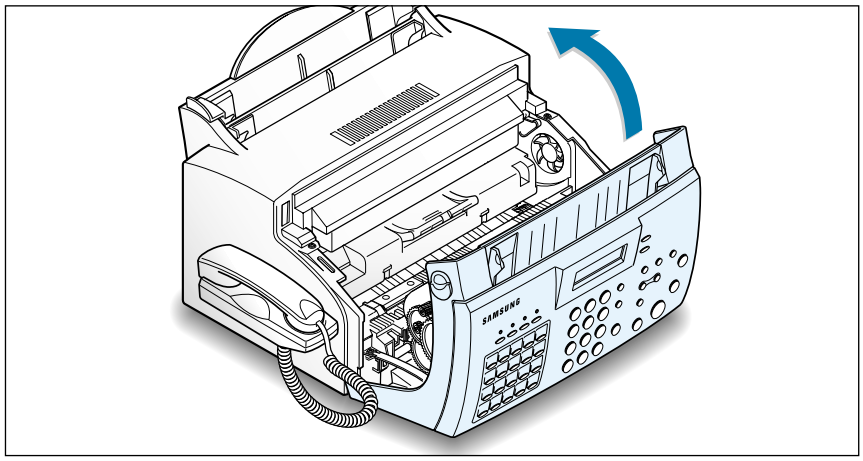

chapter 7

Troubleshooting

This chapter gives helpful information for what to do if you encounter a operating error.

It provides information on the following topics:

- Clearing Paper Jams
- LCD Error Messages
- Fax Problems
- Printer Problems
- Print Quality Problems

Clearing Jams

Document Jams While Sending a Fax

If a document jams while you are sending it, 'DOCUMENT JAM' appears on the display. Do not pull the document out of the slot. If you do this, it could harm your machine.

1. Lift the front panel by grabbing the panel along the top edge.

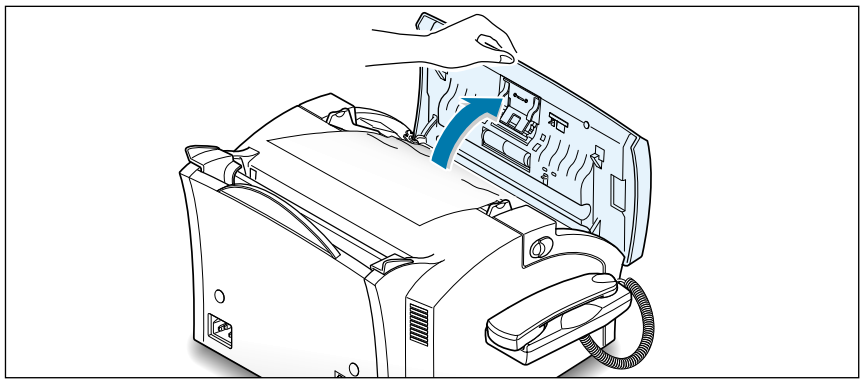

2. Carefully remove the jammed document.

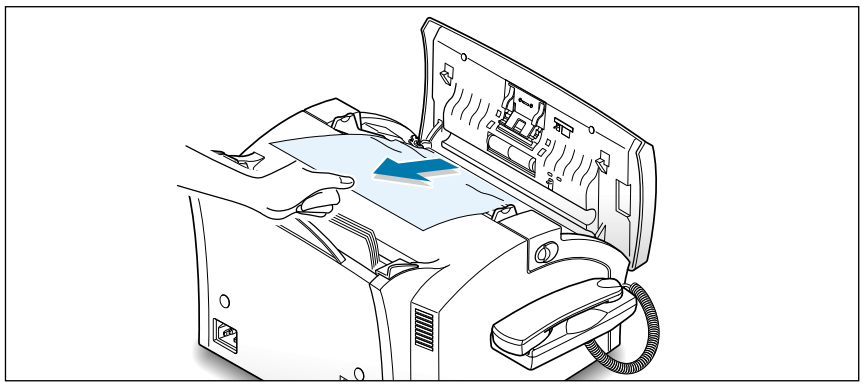

3. Close the front panel firmly until it clicks into place.

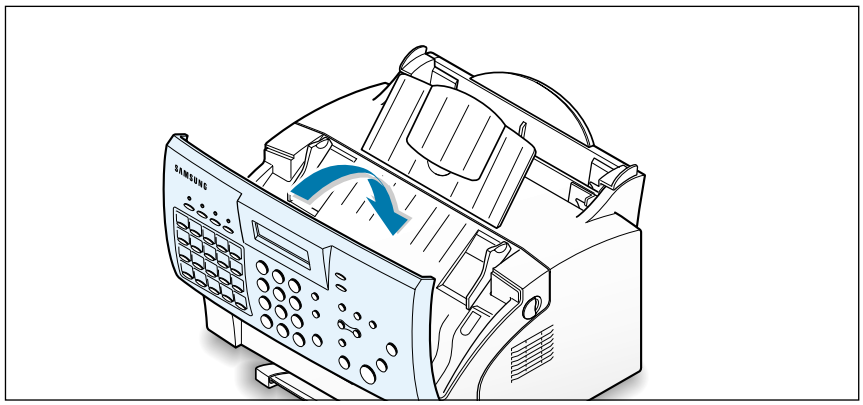

Paper Jams While the Machine is Printing

By carefully selecting the paper type and loading them properly, you should be able to avoid most paper jams. If paper jams occur, an error message appears on the display. Follow the steps below to clear the jam. To avoid tearing the paper, pull the jammed paper out gently and slowly.

IF JAMMED IN THE PAPER INPUT TRAY

1. Remove the jammed paper by carefully pulling it out of the tray.

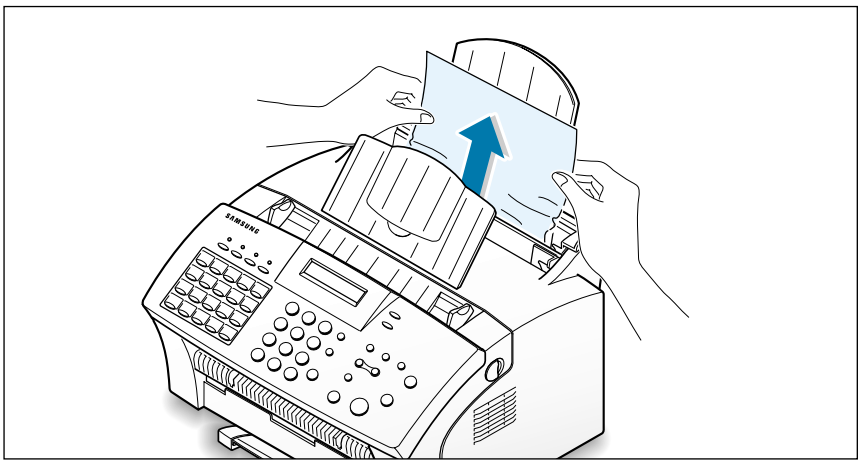

2. After you have removed the jammed paper, load the paper with the print side facing you.

IF JAMMED IN THE PAPER OUTPUT AREA

If the paper jams as it exits to the paper output tray and a long portion of the paper is visible, pull the paper straight out.

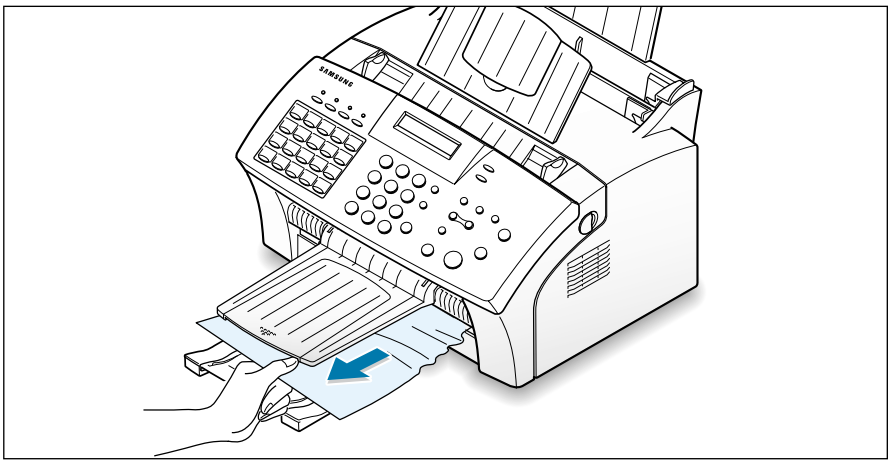

If there is any resistance, and the paper does not move immediately when you pull, stop pulling. Continue with the next step.

IF JAMMED INSIDE THE MACHINE

1. Pulling the cover release buttons toward you, open the cover.

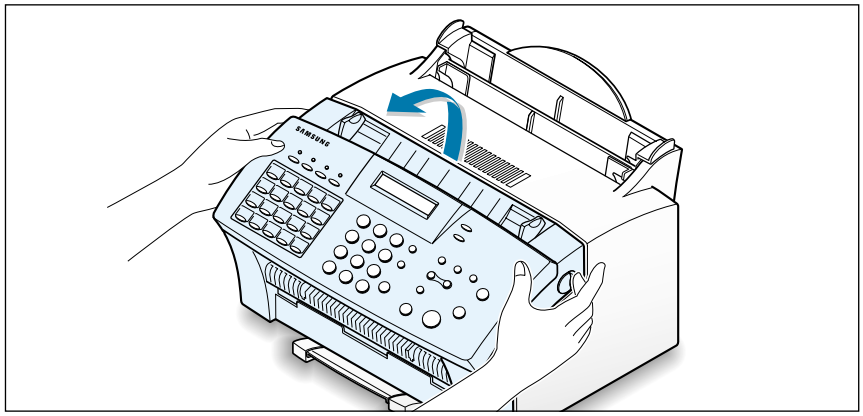

2. Remove the toner cartridge.

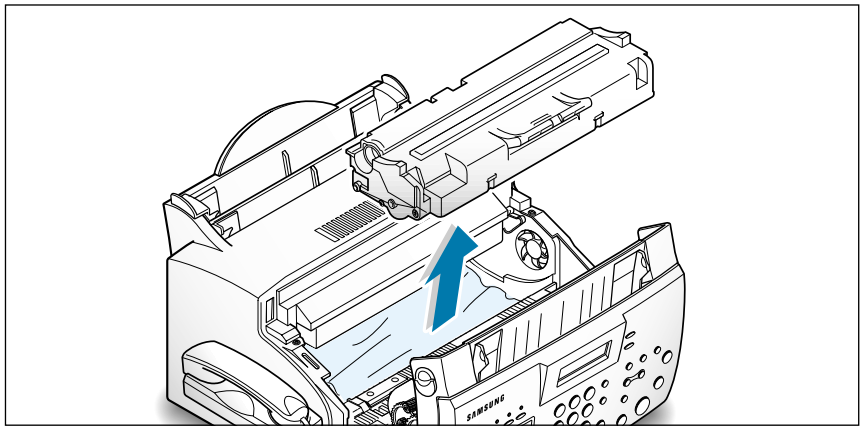

3. Remove the jammed paper by carefully pulling it out of the machine.

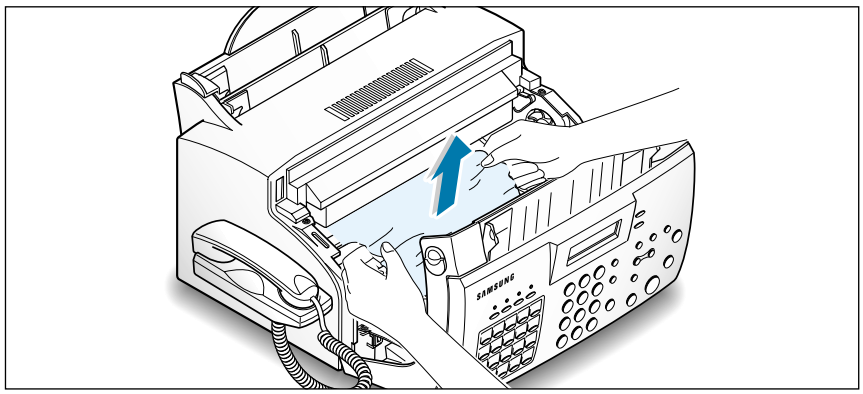

4. Check that there is no other paper inside the machine.

5. Replace the toner cartridge and close the cover.

Tips for Avoiding Paper Jams

By carefully selecting print materials and loading them properly, you should be able to avoid most paper jams. If jams do occur, follow the steps outlined in "Clearing Jams" starting on page 7.1. If jams occur frequently, make sure that you are following these preventative tips:

- Follow the procedures in "Loading Paper" on page 1.17 to load paper properly. Make sure that the adjustable guides are positioned correctly.
- Do not overload the paper. Up to 150 sheets can be loaded in the automatic paper input tray at a time and the manual input tray holds only one sheet at a time.
- If you are needed to add more sheets of paper while printing, remove the remaining paper from the tray at first. Then, reinsert them with the new paper. Note that adding new paper into the remains in the tray may cause paper jams or multiple feeding.
- Envelopes with self-stick adhesives may cause wrinkling, creasing, or even jams and may even damage your machine.
- Fan stacks of labels or transparencies before loading them into the automatic paper input tray. If jams occur when using the paper input tray, try feeding one sheet at a time in the manual input tray.
- Do not load wrinkled, creased, damp, or highly curled paper.
- Do not mix paper sizes in the paper input tray.
- Use only recommended print media.
- Make sure that the recommended print side is facing up when loading it in the paper input tray.
- Keep print media stored in a suitable environment.

LCD Error Messages

Display	Meaning	Solution
DOCUMENT JAM	The loaded document has jammed in the feeder.	Clear the document jam.
DOOR OPEN	The front cover is not securely latched.	Press down on the cover until it clicks in place.
FUSER ERROR	There occurs a problem in the fuser unit.	Unplug the power code and plug it back in. If the problem still persists, please call for service.
JAM/NO CARTRIDGE	Recording paper has jammed inside the unit, or the toner cartridge is not installed.	Clear the jam, or install the cartridge
LINE ERROR	Your unit cannot connect with the remote machine, or has lost contact because of a problem on the phone line.	Try again. If failure persists, wait an hour or so for the line to clear, then try again. Or, turn the ECM mode on. See 'Setting User-Selectable System Options' on page 3.2.
LOAD DOCUMENT	You have attempted to set up a sending operation with no document loaded.	Load a document and try again.
LSU ERROR	A problem has occurred in the LSU (Laser Scanning Unit).	Unplug the power cord and plug it back in. If the problem still persists, please call for service.
MEMORY FULL	The memory is full.	Either delete unnecessary documents, or retransmit after more memory becomes available, or split the transmission into more than one operation.
NO ANSWER	The remote machine has not answered after all the redial attempts.	Try again. Make sure the remote machine is operational.
NO. NOT ASSIGNED	The one-touch or speed dial location you tried to use has no number assigned to it.	Dial the number manually with the keypad, or assign a number.

Display	Meaning	Solution
NO PAPER	The recording paper has run out.	Load the recording paper.
OVER HEAT	The printer part in your unit has overheated.	Please wait until it cools down. If you cannot solve the problem, please call for service.
PAPER JAM 0	Recording paper has jammed in the paper feeding area.	Press **Stop** and clear the jam. See page 7.1.
PAPER JAM 2	Jammed paper still remains inside the unit.	Clear the jam. See page 7.1.
POLLING ERROR	The remote fax machine you want to poll is not ready to respond to your poll. Or When setting up to poll another fax machine, you have used an incorrect poll code.	The remote operator should know in advance that you are polling and have their fax unit loaded with the original document. Enter the correct poll code.
POWER FAILURE	A power failure has occurred.	If documents have been stored in the memory, a 'Power Failure Report' will be automatically printed when the power is restored.
RECEIVE ERROR	A fax has not been received successfully.	A problem with the facsimile communications has occurred. Ask the sender to try again.
RETRY REDIAL ?	The machine is waiting for a specified time interval to redial a previously busy station.	You can press **Start/Enter** to immediately redial, or **Stop** to cancel the redial operation.
SEND ERROR	Your fax has not gone through successfully.	A problem with the facsimile communications has occurred. Try again.
TONER EMPTY	The toner cartridge has run out. The machine stops.	Replace with a new toner cartridge.
TONER LOW	The toner is almost empty.	Take out the toner cartridge and gently shake it. By doing this, you can temporarily re-establish printing operations.
WARMING UP	The printer is warming up and is off-line.	Wait until the machine is on-line.

Fax Problems

Symptom	Cause and Solution
The machine is not working, there is no display and the buttons are not working.	• Unplug the power cord and plug it in again. • Check that your socket is active.
No dial tone.	• Check that the phone line is connected properly. • Check that the phone socket in the wall by plugging in another phone.
The numbers stored in the memory do not dial correctly.	• Make sure that the numbers are stored in the memory correctly. • Print a Phonebook list. See page 3.38.
The document does not feed into the machine.	• Make sure that the document is not wrinkled and you are putting it in correctly. Check the document is the right size, not too thick or thin. • Make sure that the cover is firmly closed.
You cannot receive faxes automatically.	• The FAX mode should be selected. • Is there paper in the machine? • Check if the display shows 'MEMORY FULL.'
Your machine cannot receive faxes manually.	• Did you hang up the handset of the machine before you pressed **Start/Enter**?
Your machine will not send anything.	• Make sure that the document is loaded face down. • 'TX' should show up on the display. • Check the other machine you are sending to, to see if it can receive your fax.

Symptom	Cause and Solution
You cannot poll another machine.	• The fax machine you are polling may be using a poll code.
The incoming fax has blank spaces or you received a poor-quality copy.	• The machine sending you the fax may be faulty. • The fax machine sending you a fax may have a dirty scan glass. • A noisy phone line can cause line errors. • Check your machine by making a copy. • The toner cartridge may be empty.
Are some of the words on the incoming fax stretched?	• The machine sending you the fax had a temporary document jam.
There are lines on the copies or documents you send.	• Check your scan glass for marks, and clean it. See page 6.5.
The machine dials a number, but fails to make a connection with another fax machine.	• The other fax machine may be turned off, out of paper, or cannot answer incoming calls. Speak with the other machine operator and ask them to sort out the problem.
You cannot store a document in the memory.	• There may not be enough memory to store the document. If the display shows a 'MEMORY FULL' message, delete any documents you no longer need from the memory, then restore the document.
Blank areas appear at the bottom of each page or on other pages, with only a small strip of text printed at the top.	• You may have chosen the wrong paper settings in the user option setting. See page 3.3 to choose a proper paper size.

General Printing Problems (SF-535e only)

Problem	Possible Cause and Remedy
Your machine does not print.	• A paper jam has occurred. Remove the jammed paper. See page 7.1. • The toner cartridge is not installed properly. Remove and reinsert the toner cartridge. • The printer cable is not connected properly. Check the printer cable connection. • The printer cable is defective. Swap the cable with one known to work. • The port setting is incorrect. Check the Windows printer settings to make sure that the print job is being sent to the correct port (for example, LPT1). • The printer properties may be configured incorrectly. Check the application to make sure that all print settings are correct. • The printer driver may be incorrectly installed. Uninstall the MFP driver and reinstall the MFP driver. Then try printing a test page. Refer to 'Uninstalling SmarThru Software' on page 2.19.
The paper is not fed into the machine.	• Paper has not been inserted correctly. Remove and reinsert the paper correctly. See 'Using Automatic Paper Input Tray' on page 5.3 or 'Using Manual Paper Input Tray' on page 5.6. • There is too much paper in the paper input tray. Remove some of the paper from the input tray.
The paper keeps jamming.	• There is too much paper in the paper input tray. Remove some of the paper from the tray. (If printing onto envelopes or labels, insert them one at a time in the manual paper input tray.) • The paper setting method may be incorrect. If printing onto envelopes, insert the envelopes so that there is a gap of approximately 1 mm (1/32") between the left and right edge of the envelopes at the paper guide.

Problem	Possible Cause and Remedy
Half of the page is blank.	• The page layout is too complex. Simplify the page layout and remove any unnecessary graphics from the document if possible. • The page orientation setting may be incorrect. Change the page orientation in the Printer Properties dialogue box. • The paper size and the software paper size settings do not match. Insert the correct paper into the machine or change the software paper size settings. • Scaling may be set to less than 100%. Change the Scaling setting in the Printer Properties dialogue box. • The printer cable specifications may be incorrect. Use or replace the cable with an IEEE-1284 rated cable.
Your machine prints the wrong data, or it prints incorrect characters.	• The printer cable might not be connected properly. Check the printer cable connection. • There may be a problem with the printer driver software. Exit Windows and reboot the computer. Turn the printer off and then back on again. • The printer cable specifications may be incorrect. Use or replace the cable with an IEEE-1284 rated cable.
Printing is too slow.	• If using Windows 95/98/Me, the Spooling Setting may be set incorrectly. From the **Start** menu, select **Settings** and **Printers**. Click your printer icon with the right mouse button, select **Properties**, click the **Details** tab, and then click the **Spool Settings** button. Select the desired spool setting from the available choices. • If you are using Windows NT/2000, the Scheduling setting may be set incorrectly. From the **Start** menu, select **Settings** and **Printers**. Click your printer icon with the right mouse button, select **Properties**, click the **Scheduling** tab. Then, select the desired scheduling setting from the available choices.

Print Quality Problems

Problem	Possible Cause and Remedy
Light or faded print 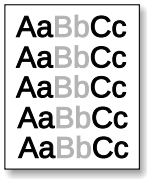	If a vertical white streak or faded area appears on the page: • The toner supply is low. You may be able to temporarily extend the toner cartridge life. See "Redistributing the Toner" on page 6.7. If this does not improve the print quality, install a new toner cartridge. • The paper may not meet paper specifications (for example, the paper is too moist or too rough). See "Paper Type and Size" for faxing on page 1.19 and "Selecting Print Media" for PC printing on page 5.1. • If the whole page is light, Toner Save Mode may be on. Turn the Toner Save Mode option off on front panel or within the printer properties as your setting. See page 1.24 and 5.11 respectively. • A combination of faded and smeared defects may indicate that the toner cartridge needs cleaning. See "Cleaning the OPC Drum" on page 6.2. • The surface of scanner parts inside the machine may be dirty. See "Cleaning the Document Scanner" on page 6.5.
Toner specks 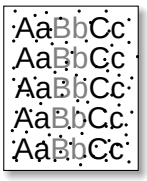	• The paper may not meet paper specifications. See "Paper Type and Size" for faxing on page 1.19 and "Selecting Print Media" for PC printing on page 5.1. • The transfer roller area may be dirty. See "Cleaning the Inside" on page 6.4. • The paper path may need cleaning. See "Cleaning the Inside". • The surface of scanner parts may need cleaning. See "Cleaning the Document Scanner" on page 6.5.
Vertical lines 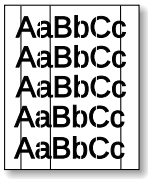	If black vertical streaks appear on the page: • The photosensitive drum inside the toner cartridge has probably been scratched. Install a new toner cartridge. If white vertical streaks appear on the page: • The surface of LSU part inside the machine may be dirty. Clean the LSU (see page 6.5).

Problem	Possible Cause and Remedy
Dropouts 	If faded areas, generally rounded, occur randomly on the page: • A single sheet of paper may be defective. Try reprinting the job. • The moisture content of the paper is uneven or the paper has moist spots on its surface. Try a different kind or brand of paper. See "Paper Type and Size" for faxing on page 1.19 and "Selecting Print Media" for PC printing on page 5.1. • The paper lot is bad. The manufacturing processes can cause some areas to reject toner. Try a different kind or brand of paper. • The toner cartridge may be defective. See "Vertical repetitive defects" on page 7.13. • If these steps do not correct the problems, contact a service representative.
Gray background 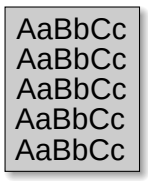 	If the amount of background toner shading becomes unacceptable, the procedures below may help to clear the condition: • Change the paper to a lighter basis weight. See "Paper Type and Size" for faxing on page 1.19 and "Selecting Print Media" for PC printing on page 5.1. • Check the printer's environment; very dry (low humidity) or high humidity (higher than 80 % RH) conditions can increase the amount of background shading. • Install a new toner cartridge. • Adjust the shading setting. See "Adjusting Shading" on page 6.2.
Toner smear 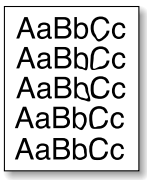 	• Clean the inside of the printer. See "Cleaning the Inside" on page 6.4. • Check the paper type and quality. See "Paper Type and Size" for faxing on page 1.19 and "Selecting Print Media" for PC printing on page 5.1. • Try installing a new toner cartridge.

Problem	Possible Cause and Remedy
Vertical repetitive defects 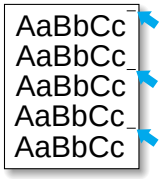	If marks repeatedly appear on the printed side of the page at even intervals: • The toner cartridge may be damaged. Print a cleaning sheet several times by cleaning the OPC drum (see page 6.2). After the printout, if you still have the same problems, install a new toner cartridge. • Parts in the machine may have toner on them. If the defects occur on the back of the page, the problem will likely correct itself after a few more pages. • The fusing assembly may be damaged. Contact a service representative.
Background scatter 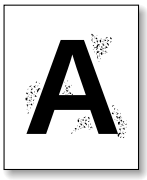	Background scatter results from bits of toner distributed on the printed page. • The paper may be too damp. Try printing with a different batch of paper. Do not open packages of paper until necessary so that the paper does not absorb too much moisture from the air. • If background scatter occurs on an envelope, change your printing layout to avoid printing over areas that have overlapping seams on the reverse side. Printing on seams can cause this problem. • If background scatter covers the entire surface of a printed page, adjust the print resolution through your software application or the printer properties.
Misformed characters 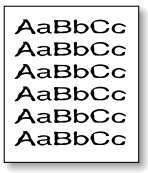	• If characters are improperly formed, producing hollow images, the paper stock may be too slick. Try a different paper. See "Paper Type and Size" for faxing on page 1.19 and "Selecting Print Media" for PC printing on page 5.1. • If characters are improperly formed, producing a wavy effect, the scanner unit may need service. Verify that it also occurs on a demo page. - On SF-530: Press **Demo** (*) on the front panel when the machine is ready. - On SF-535e: In Windows, select **Start** → **Settings** → **Printers** → **Samsung SF-530 Series** → **File** → **Properties**, then click **Print Test Page** in General tab. If you need service, contact a service representative.

Problem	Possible Cause and Remedy
Page skew 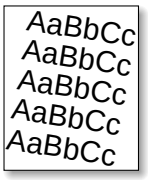	• Check the paper type and quality. See "Paper Type and Size" for faxing on page 1.19 and "Selecting Print Media" for PC printing on page 5.1. • Make sure that the paper or other media is loaded correctly and the guides are not too tight or too loose against the paper stack.
Curl or wave 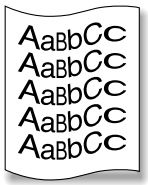	• Check the paper type and quality. Both high temperature and humidity will cause paper curl. See "Paper Type and Size" for faxing on page 1.19 and "Selecting Print Media" for PC printing on page 5.1. • Turn over the stack of paper in the input tray. Also try rotating the paper 180° in the input tray.
Wrinkles or creases 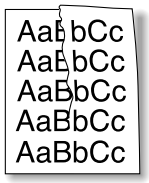	• Make sure that paper is loaded properly. • Check the paper type and quality. See "Paper Type and Size" for faxing on page 1.19 and "Selecting Print Media" for PC printing on page 5.1. • Turn over the stack of paper in the input tray. Also try rotating the paper 180° in the tray.
Back of printouts dirty 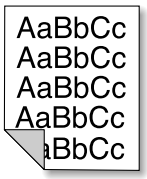	• The transfer roller area may be dirty. See "Cleaning the Inside" on page 6.4. • Check if the toner is leaking. Clean inside the machine. See page 6.4.
Black pages 	• The toner cartridge may not be installed properly. Remove the cartridge and reinsert it. • The toner cartridge may be defective and need replacing. Install a new toner cartridge. • The printer may require repairs. Contact a service representative.

Problem	Possible Cause and Remedy
Loose toner 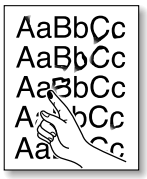 	• Clean the inside of the printer. • Check the paper type and quality. See "Paper Type and Size" for faxing on page 1.19 and "Selecting Print Media" for PC printing on page 5.1. • Try installing a new toner cartridge. • If the problem persists, the printer may require repairs. Contact a service representative.
Character Voids 	Character voids are white areas within the parts of characters that should be solid black: • If you are using transparencies when you experience this problem, try another type of transparency. (Because of the composition of transparency media, some character voids are normal.) • You may be printing on the wrong surface on the paper. Remove the paper and turn it around. • The paper may not meet paper specifications. See "Paper Type and Size" for faxing on page 1.19 and "Selecting Print Media" for PC printing on page 5.1.
Horizontal stripes 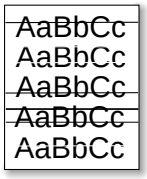 	If horizontally aligned black streaks or smears appear: • The toner cartridge may be installed improperly. Remove the cartridge and reinsert it. • The toner cartridge may be defective. Install a new toner cartridge. • If the problem persists, the printer may require repairs. Contact a service representative.

Appendix

- **Connecting Other Device to Phone Line**
- **Specifications**
  - General
  - Printer
  - Scanner
  - Copy
  - Fax
- **Safety Information**

Connecting Other Devices to the Phone Line

You can connect other devices to the same phone line as the SF-530 series product.

Deciding What to Connect

You have connected the SF-530 series to the wall jack. Generally, there are three other devices that can be connected to the same phone line:

- a telephone
- an answering machine
- an external modem or a computer with an internal modem

Which, of these you connect to this phone line depends on your configuration. Please see the following configurations.

Situation 1

You connected the SF-530 series to a wall jack with a phone line for fax calls only (a dedicated fax line).

You do not need to connect any other devices. However:

- You can connect an external modem or a computer with an internal modem to this phone line if you want to use the fax line to access the Internet or e-mail.
- You can connect an extra telephone to this wall jack if you would like to make outgoing voice calls.

To connect any of these devices to the same phone line, go to "Connecting Other Devices, Overview" on page A.3. If you have another wall jack for this phone line, you can connect the extra phone and/or external modem or computer with internal modem to the other wall jack.

Note: Because this is a dedicated fax line, you should never have an answering machine or computer connected. Or, using computer voicemail, you must connect the computer with internal modem or the external modem to your dedicated voice line. You will connect to the Internet or e-mail using the dedicated voice line.

Situation 2

You connected the SF-530 series to a wall jack with a phone line for fax and voice calls (a shared line).

Connect any other devices you have to this phone line. To connect the other devices you have to the same wall jack as the product, go to Appendix "Connecting Other Devices, Overview" on page A.3.

If you have another wall jack for this phone line, you can connect some of the devices to that wall jack. However, if you have an answering machine or computer with voicemail, make sure to connect it to the same wall jack as the SF-530 series.

Special Situations

You have two phone lines coming into one wall jack.

When you connected the SF-530 series, you should have plugged it into a phone unit splitter connected to the wall jack. Proceed as if that side of the phone unit splitter is a phone line for fax calls only (a dedicated line). See "Situation 1" on page A.1.

You have one phone line with two phone numbers and distinctive ring service.

Use the same guidelines in "Situation 2" above for connecting other devices. You can change settings for distinctive ring later.

Connecting Other Devices, Overview

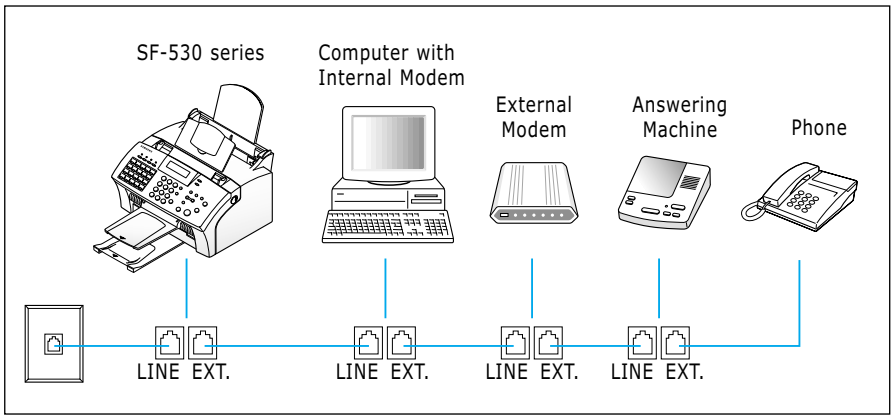

Connect other device in the order indicated.

Note:

- The SF-530 series product the device connected to the wall jack. If it isn't, it cannot answer incoming fax calls.
- As the drawing indicates, always plug the **LINE** jack into one device and the **EXT.** jack into another device.
- Some computers have a second **LINE** jack which is used to connect the computer to a dedicated voice line. If you have a second **LINE** jack, check your computer's documentation to ensure you are connecting to the correct **LINE** jack.

Specifications

General

Item	Specification and Description
Size (W x D x H) mm	467.5 x 313 x 194.2 mm
Weight (with accessories)	6.9 Kg
Interface	Parallel: IEEE 1284, USB: 1.0 compliant
Cable	Parallel and USB

Printer

Item	Specification and Description
Technology	Laser Beam
Paper Path-Recording	Front to Front
Paper Path-Document	Rear to Front
Speed	8 ppm mono, 5% Coverage in draft mode
Resolution	600 x 600 dpi
Effective Printing Width	203 mm
Feeding Method	FIFO (C-Path)
Manual Feed	Rear to Front
O/S	Windows 95/98/Me, Windows NT/2000
Emulation	Samsung PrinThru

Copy

Item	Specification and Description
Resolution	Optical 300 x 300 dpi
BW Contrast Control	Lighten, normal, darken
Multiple Copy	99 pages
Reduce & Enlarge	50 ~ 200 %

Scanner

Item	Specification and Description
Scan Method	Contact Image Sensor (CIS)
Scan Width	Max. 216 mm, Effective: 210 mm
Scan Resolution-Optical	300 x 300 dpi
Scan(Copy) Speed	6 sec/page
Feeding Method	Sheet-fed
ADF Capacity	Max 20 sheets
BW Contrast Control	lighten, normal, darken

Fax

Item	Specification and Description
Modem Speed	33.6 kbps
Compatibility	ITU Group 3
Resolution (Selectable by 1-key & LCD)	Standard: 200 x 100 dpi (Default) Fine: 200 x 200 dpi Superline: 300 x 300 dpi
Compression	MH/MR/MMR
ECM Support	Yes
Halftone	Photo: 256 grayscales
TAD Interface	Yes
Memory	2 MB
Memory Backup Receive Mode	30 Min. TEL, FAX, ANS/FAX
Tone/Pulse Switching	DTMF (Tech mode)

Safety Information

Important Precautions and Safety Information

When using this fax machine, these basic safety precautions should always be followed to reduce risk of fire, electric shock, and injury to persons:

1. Read and understand all instructions.
2. Use common sense whenever operating electrical appliances.
3. Follow all warnings and instructions marked on the product and in the literature accompanying the product.
4. If an operating instruction appears to conflict with safety information, heed the safety information. You may have misunderstood the operating instruction. If you cannot resolve the conflict, contact your sales or service representative for assistance.
5. Unplug the fax machine from the AC wall socket and telephone jack before cleaning. Do not use liquid or aerosol cleaners. Use only a damp cloth for cleaning.
6. Do not place the fax machine on an unstable cart, stand, or table. It may fall, causing serious damage.
7. Your fax machine should never be placed on, near, or over a radiator, heater, air conditioner, or ventilation duct.
8. Do not allow anything to rest on the power, telephone. Do not locate your fax machine where the cords will be abused by persons walking on them.
9. Do not overload wall outlets and extension cords. This can diminish performance, and may result in the risk of fire or electric shock.
10. Do not allow pets to chew on the AC power, telephone, or PC interface cords.
11. Never push objects of any kind into the fax machine through case or cabinet openings. They may touch dangerous voltage points, creating a risk of fire or shock. Never spill liquid of any kind onto or into the fax machine.

12. To reduce the risk of electric shock, do not disassemble the fax machine. Take it to aqualified service technician when repair work is required. Opening or removing covers may expose you to dangerous voltages or other risks. Incorrect reassembly could cause electric shock when the unit is subsequently used.
13. Unplug the machine from the telephone jack, PC, and AC wall outlet, and refer servicing to qualified service personnel under the following conditions:
    - When any part of the power cord, plug, or connecting cable is damaged or frayed.
    - If liquid has been spilled into the product.
    - If the product has been exposed to rain or water.
    - If the product does not operate properly after instructions have been followed.
    - If the product has been dropped, or the cabinet appears damaged.
    - If the product exhibits a sudden and distinct change in performance.
14. Adjust only those controls covered by the operating instructions. Improper adjustment of other controls may result in damage, and may require extensive work by a qualified service technician to restore the product to normal operation.
15. Avoid using this fax machine during a lightning storm. There may be a remote risk of electric shock from lightning. If possible, unplug the AC power and telephone for the duration of the lightning storm.
16. SAVE THESE INSTRUCTIONS.

In Case of Interference

In normal operation, your SAMSUNG fax machine produces and uses radio-frequency energy. In some cases, this can cause interference to other electronic equipment. Part 15 of the FCC rules establishes guidelines limiting the amount of radio-frequency energy which may be produced by electronic equipment. Tests have proven that your Samsung FAX machine meets or exceeds these guidelines, and is classified a "Class B Digital Device" for operation in a residential environment. When installed and operated according to instructions, your SAMSUNG fax machine should not cause interference to the types of equipment expected to be found in a normal residential environment.

Unauthorized changes or modifications could void the user's authority to operate the equipment.

In the event your SAMSUNG fax machine appears to cause interference to other electronic equipment, it can often be easily remedied. First determine if the source of interference really is your FAX machine. To do this, turn its power off and on while observing the equipment experiencing the interference. If the interference disappears when you turn the FAX machine off, the following steps can be very effective in correcting interference problems:

- Connect the FAX machine to an AC outlet which is on a different circuit breaker from the equipment experiencing interference.
- Increase the distance between the FAX machine and the equipment experiencing interference.
- Cable TV amplifiers and splitters are extremely prone to interference. Be certain that they are as far as possible from the FAX machine and its AC power and telephone cords.
- Replace "twin lead" antenna wire with shielded coaxial cable, and use proper connectors and adaptors.
- Turn or relocate the receiving antenna. In most cases this is easily done by sim-ply moving a radio. A TV antenna may need to be re-oriented or installed in another area of the building.
- Consult your dealer, a reputable radio/TV technician, or an Amateur Radio Operator for help.

* To locate an Amateur Radio Operator in your area, contact The American Radio Relay League, 610 Main St., Newington, CT 06111.

Fax Branding

The Telephone Consumer Protection Act of 1991 makes it unlawful for any person to use a computer or other electronic device to send any message via a telephone facsimile machine unless such message clearly contains in a margin at the top or bottom of each transmitted page
or on the first page of the transmission the following information:

(1) the date and time of transmission
(2) identification of either business, business entity or individual sending the message; and
(3) telephone number of either the sending machine, business, business entity or individual.

See pages 1.22 to 1.23 for instructions on how to enter this information into your Samsung FAX machine's memory.

The Telephone Company may make changes in its communications facilities, equipment operations, or procedures where such action is reasonably required in the operation of its business and is not inconsistent with the rules and regulations in FCC Part 68. If such changes can be reasonably expected to render any customer terminal equipment incompatible with telephone company communications facilities, or require modification or alteration of such terminal equipment, or otherwise materially affect its use or performance, the customer shall be given adequate notice in writing, to allow the customer an opportunity to maintain uninterrupted service.

Telephone Company Information

FCC IDENTIFICATION NUMBER

The Ringer Equivalence Number and FCC Registration Number for this equipment may be found on the label located on the bottom or rear of the machine. In some instances you may need to provide these numbers to the telephone company.

RINGER EQUIVALENCE NUMBER

The Ringer Equivalence Number (REN) is a measure of the electrical load placed on the telephone line, and is useful for determining whether you have "overloaded" the line. Installing several types of equipment on the same telephone line may result in problems making and receiving telephone calls, especially ringing when your line is called. The sum of all Ringer Equivalence Numbers of the equipment on your telephone line should be less than five in order to assure proper service from the telephone company. In some cases, a sum of five may not be usable on your line. If any of your telephone equipment is not operating properly, you should immediately remove it from your telephone line, as it may cause harm to the telephone network.

WARNING:
FCC Regulations state that changes or modifications to this equipment not expressly approved by the manufacturer could void the user's authority to operate this equipment. In the event that terminal equipment causes harm to the telephone network, the telephone company should notify the customer that service may be stopped. However, where prior notice is impractical, the company may temporarily cease service, providing that they:

a) Promptly notify the customer.
b) Give the customer an opportunity to correct the equipment problem.
c) Inform the customer of the right to bring a complaint to the Federal Communication Commission pursuant to procedures set out in FCC Rules and Regulations Subpart E of Part 68.

You should also know that:
- Your Samsung FAX machine is not designed to be connected to a digital PBX system.
- If you intend to use a computer modem or fax modem on the same phone line as your FAX machine, you may experience transmission and reception problems with all the equipment. It is recommended that no other equipment, except for a regular telephone, share the line with your FAX machine.
- If your area experiences a high incidence of lightning or power surges, we recommend that you install surge protectors for both the power and the telephone lines. Surge protectors can be purchased from your dealer or telephone and electronic specialty stores.
- When programming emergency numbers and/or making test calls to emergency numbers, use a non-emergency number to advise the emergency service dispatcher of your intentions. The dispatcher will give you further instructions on how to actually test the emergency number.
- This equipment may not be used on coin service or party lines.
- This telephone provides magnetic coupling to hearing aids.
- You may safely connect this equipment to the telephone network by means of a standard modular jack, USOC RJ-11C.

Index

A

adding documents 3.34
address label, using 3.23
adjusting shading 6.2
alert tone, setting 3.2
automatic dial
  one-touch dial 3.21
  speed dial 3.23
  using remote control panel 3.25
automatic input tray
  loading paper 1.17, 5.3
  paper source setting 5.10

B

bonus software (Acrobat Reader) 2.16
broadcasting transmission 3.28

C

cancel
  print job 5.12
  scheduled operation 3.34
cleaning
  document scanner 6.5
  machine 6.4
  OPC drum 6.2
connecting
  other devices A.1
  parallel cable 1.16
  phone line 1.14
  power cord 1.17
  USB cable 2.13
contents 1.3
copying
  using advanced features 3.18
  overview 3.17
  single copying 3.17

D

date and time, setting 1.22
delayed transmission 3.29
diskette,
  making 2.16
  installing software 2.17
document contrast, setting 3.8
document feeder, loading 3.9
document resolution, setting 3.8
document scanner, cleaning 6.5
driver,
  access 5.9
  install 2.4
  remove 2.18

E

e-mail fax
  configuring information 4.2
  receiving 4.12
  sending 4.11
  setting up address book 4.8
entering, name 3.19
error messages 7.5

F

fax problem, solving 7.7
fitting document to selected paper 5.16
forwarding received faxes 3.36
front panel, features
  SF-530 1.6
  SF-535e 1.8

G

group dialing 3.40

H

handset, inserting 1.13

I

install
  bonus software(Acrobat Reader) 2.16
  printer software 2.4
  software from diskette 2.17
  toner cartridge 1.20
introduction
  SF-530 series 1.1
  SmarThru software 2.1

L

load, document 3.9
load, paper
  in the automatic input tray 1.17, 5.3
  in the manual input tray 5.6
location, choosing 1.11

M

manual input tray
  loading paper 5.6
  paper source setting 5.10
memory
  clearing 6.1
  searching 3.27
monitoring status 3.35
multiple pages on one sheet, print 5.14

N

network, setting 5.24
notifying toner low 6.3
number and name, setting 1.23

O

one-touch dialing 3.21
one-touch label plate 1.14
OPC drum, cleaning 6.2
orientation 5.10
overlay, using 5.20

P

parts, identifying 1.4
paper
  in automatic input tray 1.17, 5.3
  in the manual input tray 5.6
  selecting 1.19, 5.1
  setting 3.3, 5.10
paper jam, clear 7.8
  document 7.1
  inside the machine 7.3
  output area 7.2
  paper input tray 7.2
  tips avoiding paper jams 7.4
paper orientation, setting 5.10
paper save mode 1.25
paper size, setting 5.10
paper source, setting 5.10
paper type, setting 5.10
parallel, connection 1.16
pause, inserting 3.21
phone line, connection 1.14
polling
  reception 3.33
  transmission 3.32
poster, printing 5.17
power, plugging 1.17
power save mode 1.24, 5.11
printer driver see *driver*
print media see *paper*
print quality problem, solving 7.11
print quality, setting 5.10
print resolution 5.10
printer software, install 2.4
printing problem, solving 7.9
printing
  cancel 5.12
  cleaning page 6.2
  document 5.9
  general problems, solving 7.9
  help 5.13
  in network environment 5.24
  last page 5.13
  several pages per sheet 5.14
  quality problems, solving 7.11
  reports 3.38

P *(continued)*

problem, solving
  error messages 7.5
  fax 7.7
  general printing 7.9
  paper jam 7.1
  print quality 7.11
priority transmission 3.31

Q

quality, problems 7.11

R

receiving e-mail fax 4.12
receiving fax
  by an extension telephone 3.16
  in ANS/FAX mode 3.15
  in AUTO mode 3.15
  in DRPD mode 3.6
  in FAX mode 3.14
  in TEL mode 3.16
reception mode 3.13
redialling
  automatic 3.10
  last number 3.11
replacing, toner cartridge 6.8
remote control panel
  e-mail address 4.8
  e-mail information 4.5
  phonebook 3.25
remote test 6.3
reprint
  last page 5.13
  setting 5.11
reports, printing 3.38

S

scaling document 5.15
send
  e-mail fax 4.11
  fax 3.10
  flash 3.35
searching, memory 3.27
setting
  alert tones 3.2
  automatic e-mail reception 4.13
  date and time 1.22
  default ISP 4.7
  e-mail address book 4.8
  fax number and name 1.23
  resolution and contrast 3.8
  volume 3.1
  stand-alone fax system 3.2
specifications A.4
speed dialing 3.23
storing
  e-mail addresses 4.8
  group dial 3.40
  one-touch 3.21
  speed dial 3.23
supports, attaching 1.12
system options, 3.2
system requirements, for software 2.3

T

tape, removing 1.11
toll save transmission 3.37
toner cartridge
  installing 1.20
  replacing 6.7
toner save mode 1.24, 5.11
troubleshooting see *problem, solving*

U

uninstall,
  MFP driver 2.18
  SmarThru software 2.19
  using CD-ROM 2.21
USB port, connection 2.13
user-selectable options 3.3

V

voice request 3.12
volume, setting 3.1

W

watermarks, printing 5.18

Visit us at:
http://www.samsungprinter.com

Home

P/N. JCXX-XXXXXA Rev.1.00