Trademarks

- SmarThru3, MailBox, Image Manager, Scan Manager, Copy Manager, Image Viewer, AnyPage are trademarks of Samsung Electronics.
- Windows, Windows 95, Windows 98, Windows Me, Windows NT, Windows 2000 and Windows XP are trademarks of Microsoft corporation.
- Other names and trademarks mentioned in this manual are trademarks of their respective holders.

Contents

Chapter 1 Getting Started

Introduction

Welcome! — 1.1
Contents — 1.3
Identifying Parts — 1.4

Setting Up Your Machine

Choosing a Location — 1.9
Preparing Your Machine for Use — 1.9
Attaching the Supports — 1.10
Connecting to the Phone Line — 1.12
Connecting to the Computer — 1.14
Plugging In the Power — 1.15
Loading Paper — 1.15
Installing the Toner Cartridge — 1.18
Setting the Date and Time — 1.20
Setting Your Fax Number and Name — 1.21
Testing the Machine — 1.21
Using Save Modes — 1.22

Chapter 2 Installing Samsung Software

Samsung SmarThru

About Samsung SmarThru Software — 2.1

Installing Software

System Requirements — 2.3
Installing the Samsung Software — 2.4
Installing the USB Driver in Windows 98/Me — 2.8
Uninstalling Samsung Software — 2.11

Chapter 3 Stand-alone Fax

Setting Up Stand-alone Fax System

Setting Volume ---------- 3.1
Setting Alert Tones ---------- 3.2
Setting User-Selectable System Options ---------- 3.2

Sending a Fax

Preparing Documents for Faxing or Copying ---------- 3.7
Setting Document Resolution and Contrast ---------- 3.8
Loading Documents ---------- 3.9
Sending a Fax Automatically ---------- 3.10
Sending a Fax After Talking ---------- 3.11
Voice Request ---------- 3.12

Receiving a Fax

About Reception Modes ---------- 3.13
Loading Paper for Receiving Faxes ---------- 3.14
Receiving Automatically in FAX Mode ---------- 3.14
Receiving in AUTO Mode ---------- 3.15
Receiving Automatically in ANS/FAX Mode ---------- 3.15
Receiving Manually in TEL Mode ---------- 3.16
Receiving Manually Using an Extension telephone---------- 3.16

Making a Copy

Copying Overview ---------- 3.17
Making a Single Copy ---------- 3.17
Using Advanced Copy Features ---------- 3.18

Automatic Dialling

How To Enter a Name Using the Number Keys ---------- 3.19
One-Touch Dialling ---------- 3.21
Speed Dialling ---------- 3.23
Using the Phonebook on Your Computer ---------- 3.25
Searching for a Number in the Memory ---------- 3.27

Advanced Fax

Broadcasting ---------- 3.28
Delayed Fax ---------- 3.29
Priority Fax ---------- 3.31
Polling ---------- 3.32
Adding Documents To a Scheduled Operation ---------- 3.34
Cancelling a Scheduled Operation ---------- 3.34

Contents (continued)

Chapter 3 Stand-alone Fax *(continued)*

Additional Functions

Sending a Recall (Flash or R) ---------- 3.35
Monitoring a Dual Job Status ---------- 3.35
Forwarding Received Faxes ---------- 3.36
Toll Save Fax ---------- 3.37
Printing Reports ---------- 3.38
Group Dialling (for Multi-Address Transmission) ---------- 3.40

Chapter 4 Printing

Print Media

Selecting Print Media ———— 4.1
Using the Automatic Paper Input Tray ———— 4.3
Using the Manual Paper Input Tray ———— 4.5
Specialty Paper Guidelines ———— 4.8

Printing

Printing a Document ———— 4.9
Cancelling a Print Job ———— 4.12
Printing Help ———— 4.12
Using a Favorite Setting ———— 4.13
Setting Paper Properties ———— 4.14
Using the Toner Save Mode ———— 4.15
Printing Multiple Pages on One Sheet of Paper ———— 4.17
Printing a Reduced or Enlarged Document ———— 4.18
Fitting Your Document to a Selected Paper Size ———— 4.19
Printing Posters ———— 4.20
Using Watermarks ———— 4.21
Using Page Overlays ———— 4.24
Setting Graphic Propeties ———— 4.28
Using Output Options ———— 4.30
Setting Up the Locally Shared Printer ———— 4.31

Chapter 5 Maintenance

Guidelines for Maintenance — 5.1
Clearing Memory — 5.1
Cleaning the OPC Drum — 5.2
Adjusting Shading — 5.2
Setting the Machine to be Checked by Phone — 5.3
Sending Toner Low Information to the Service Company — 5.3
Cleaning the Machine — 5.4
Managing the Toner Cartridge — 5.7
Automatic Document Feeder Rubber Pad Replacement 5.10

Chapter 6 Troubleshooting

Clearing Paper Jams — 6.1
LCD Error Messages — 6.5
Fax Problems — 6.7
General Printing Problems — 6.9
Print Quality Problems — 6.11

Appendix

Connecting Other Devices to the Phone line — A.1
Specifications — A.4
Safety Information — A.6
Index — A.11

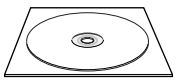

Refer to the SmarThru User's Guide for information on:

- Scanning a document
- Copying a document
- Working with a scanned image
- Recognizing a scanned image as text
- How to use additional features using the Samsung SmarThru 3 program

Environmental and Safety Consideration

Laser Safety Statement

The printer is certified in the U.S. to conform to the requirements of DHHS 21 CFR, chapter 1 Subchapter J for Class I(1) laser products, and elsewhere is certified as a Class I laser product conforming to the requirements of IEC 825.

Class I laser products are not considered to be hazardous. The laser system and printer are designed so there is never any human access to laser radiation above a Class I level during normal operation, user maintenance, or prescribed service condition.

WARNING

Never operate or service the printer with the protective cover removed from Laser/Scanner assembly. The reflected beam, although invisible, can damage your eyes.

DANGER - INVISIBLE LASER RADIATION WHEN OPEN. AVOID DIRECT EXPOSURE TO BEAM.

DANGER - RADIATIONS INVISIBLES DU LASER EN CAS D'OUVERTURE. EVITER TOUTE EXPOSITION DIRECTE AU FAISCEAU.

VORSICHT - UNSICHTBARE LASERSTRAHLUNG, WENN ABDECKUNG GEUÖFFNET. NICHT DEM STRAHL AUSSETZEN.

ATTENZIONE - RADIAZIONE LASER INVISIBILE IN CASO DI APERTURA. EVITARE L'ESPOSIZIONE AL FASCIO.

PRECAUCIÓN - RADIACIÓN LASER INVISIBLE CUANDO SE ABRE. EVITAR EXPONERSE AL RAYO.

PERIGO - RADIAÇÃO LASER INVISÍVEL AO ABRIR. EVITE EXPOSIÇÃO DIRECTA AO FEIXE.

GEVAAR - ONZICHTBARE LASERSTRALEN BIJ GEOPENDE KLEP. DEZE KLEP NIET OPENEN.

ADVARSEL - USYNLIG LASERSTRÅLNING VED ÅBNING. UNDGÅ UDSAETTELSE FOR STRÅLNING.

ADVARSEL. - USYNLIG LASERSTRÅLNING NÅR DEKSEL ÅPNES. UNNGÅ EKSPONERING FOR STRÅLEN.

VARNING - OSYNLIG LASERSTRÅLNING NÄR DENNA DEL ÄR ÖPPEN. STRÅLEN ÄR FARLIG.

VARO! - NÄKYMÄTÖN AVATTAESSA OLET ALTTIINA LASERSÄTEILYLLE ÄLÄ KATSO SÄTEESEEN.

注 意 - 严禁揭开此盖, 以免激光泄露灼伤

주 의 - 이 덮개를 열면 레이저광에 노출될 수 있으므로 주의하십시오.

Ozone Safety

During normal operation, the Samsung SF-555P produces ozone. the ozone produced does not present a hazard to the operator. However, it is advisable that the machine be operated in a well ventilated area.

If you need additional information about ozone, please request your nearest Samsung dealer.

Power Saver

This printer contains advanced energy conservation technology that reduces power consumption when it is not in active use.

When the printer does not receive data for an extended period of time, power consumption is automatically lowered.

The energy star emblem does not represent EPA endorsement of any product or service.

Radio Frequency Emissions

FCC Regulations

This equipment has been tested and found to comply with the limits for a Class B digital device, pursuant to Part 15 of the FCC Rules. These limits are designed to provide reasonable protection against harmful interference in a residential installation. This equipment generates, uses and can radiate radio frequency energy and, if not installed and used in accordance with the instructions, may cause harmful interference to radio communications. However, there is no guarantee that interference will not occur in a particular installation.

If this equipment does cause harmful interference to radio or television reception, which can be determined by turning the equipment off and on, the user is encouraged to try to correct the interference by one or more of the following measures:

- Reorient or relocate the receiving antenna.
- Increase the separation between the equipment and receiver.
- Connect the equipment into an outlet on a circuit different from that to which the receiver is connected.
- Consult the dealer or an experienced radio/TV technician for help.

Do not make any changes or modifications to the equipment unless otherwise specified in the manual. If such changes or modifications should be made, you must first stop operation of the equipment.

Use of shielded cable is required to comply with Class B limits in Subpart B of Part 15 of FCC Rules.

CAUTION: Changes or modifications not expressly approved by the manufacture responsible for compliance could void the user's authority to operate the equipment.

Canadian Radio Interference Regulations

This digital apparatus does not exceed the Class B limits for radio noise emissions from digital apparatus as set out in the interference-causing equipment standard entitled “Digital Apparatus”, ICES-003 of the Industry and Science Canada.

Cet appareil numérique respecte les limites de bruits radioélectriques applicables aux appareils numériques de Classe B prescrites dans la norme sur le matériel brouilleur: “Appareils Numériques”, ICES-003 édictée par l’Industrie et Sciences Canada.

Memo

chapter 1

Setting Started

Congratulations on the purchase of your SF-555P product!
This chapter provides information on the following topics:

Introduction

- Welcome!
- Contents
- Identifying Parts

Setting Up Your Machine

- Choosing a Location
- Preparing Your Machine for Use
- Attaching the Supports
- Connecting to the Phone Line
- Connecting to the Computer
- Plugging In the Power
- Loading Paper
- Installing Toner Cartridge
- Setting the Date and Time
- Setting Your Fax Number and Name
- Testing the Machine
- Using Save Modes

Introduction

Welcome!

Thank you for purchasing the Samsung SF-555P, a powerful business tool with the capabilities of a full range of office equipment. With the Samsung SF-555P, you can:

Fax

Use the Samsung SF-555P as a **full-featured stand-alone fax machine** to send and receive faxes. Perform advanced tasks such as delayed transmission, broadcasting, and unattended memory sending.

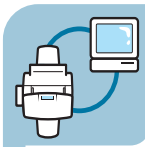

Print

You can get 600 x 600 dpi high-quality laserjet printing from the Samsung SF-555P machine. You can create professional documents using the creative printing features on the various kinds of print media, such as plain papers, envelopes, transparencies, label, and so on.

Copy

Make up to **99 copies** of a 20-pages document without having to connect to a PC. You can adjust the contrast, enlarge or reduce the copies, collate, and more.
For Samsung SF-555P, if you use the Samsung SmarThru software on the PC, you can copy a scanned image using various copy options, such as multiple pages on a sheet, poster printing, and a cloning feature.

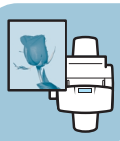

Scan

Scan important documents to create electronic files. Use the scanner to add photo or graphic images to other software applications or to jazz up your projects. AnyPage OCR (Optical Character Recognition) software lets you scan text directly into your word processing program.

Use Samsung SmarThru software

Samsung SmarThru program consists of several components that provide particular functionality as follows:

- **Scan Manager** — Working with documents or images, you can scan to Image Manager, scan to OCR software, scan to e-mail.
- **Image Manager** — Working with images, you can import, export, store and change images.
- **Copy Manager** — Working with documents or images, you can control the copying process. It can also save a copy of the image or document to Image Manager.
- **MailBox** — Working with e-mail and e-fax messages, you can create, send, browse and st ore messages. (Note e-mail service is available only if you have subscribed to an Internet service provider and properly configured the Internet gate when you install the Samsung software)
- **Image Viewer** — Working with documents or images, you can view the image in a variety of graphical formats.

Contents

Here's what comes with the SF-555P

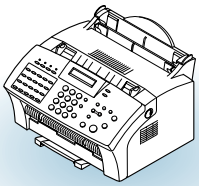

SF-555P machine

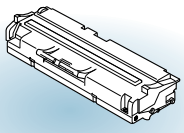

Toner cartridge

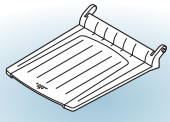

Document output support

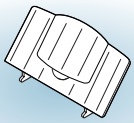

Document input support

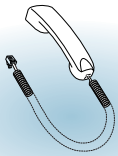

Handset

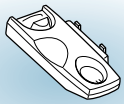

Handset cradle

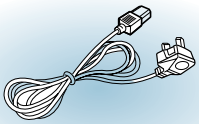

Power cord *

Telephone line cord *

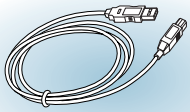

USB cable

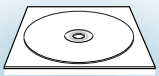

software CD-ROM
User's Guide
SmarThru User's Guide

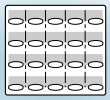

One-touch label
for the front panel

*: These may look different depending on the country.

Notes:

- You should use the Telephone line cord which is supplied with the machine. If you are replacing it with the other vendor's part, it should be AWG #26 or lower gage.
- Power cord must be plugged in grounded power socket.

Identifying Parts

Before setting up your machine, make sure you identify the following parts related to the scanner and paper print paths.

Identifying Scanner Path Parts

Items to be faxed, copied, or scanned use the scanner path which consists of the following parts:

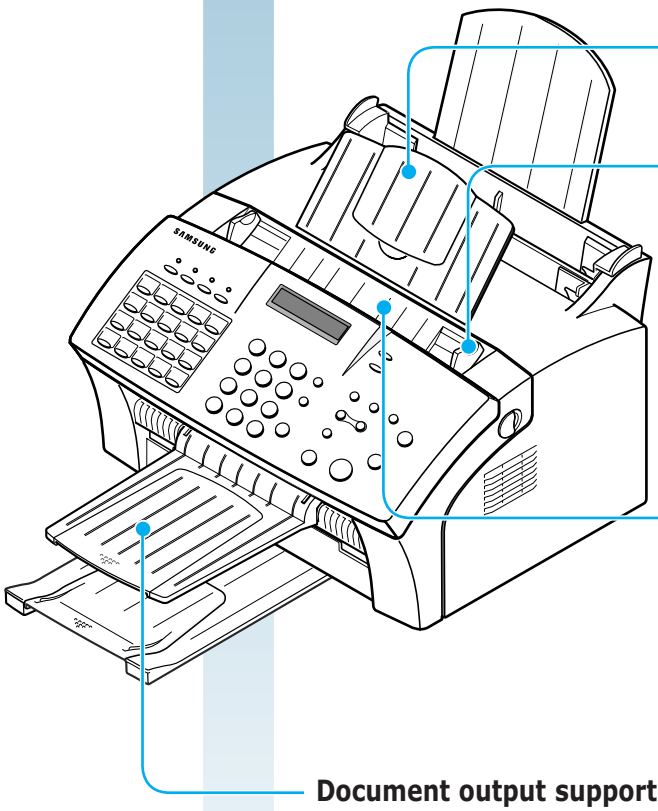

Document input support

Supports original documents.

Document guides

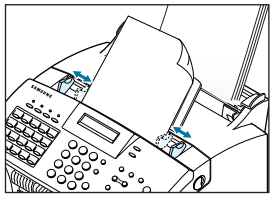

Aligns documents.

Automatic document feeder

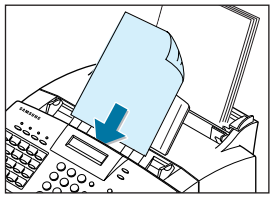

Loads up to 20 pages at a time.

Document output support

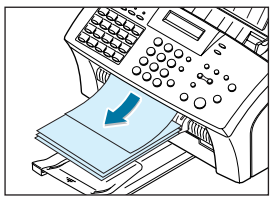

Supports the original document when faxing, copying, or scanning is complete.

Identifying Printer Path Parts

Paper for printing, receiving faxes and copying follow the printer path. This path consists of the following parts:

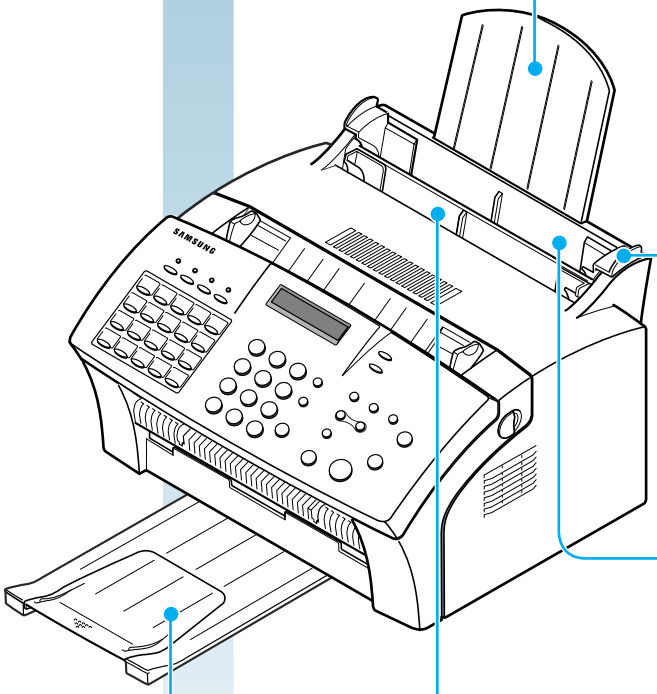

Paper input support

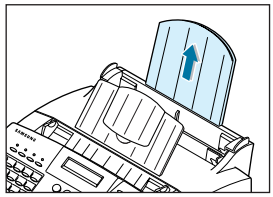

Support the print media

Paper guides

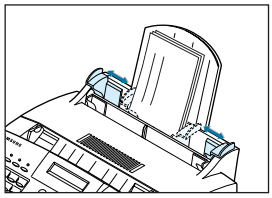

Aligns paper.

Automatic paper input tray

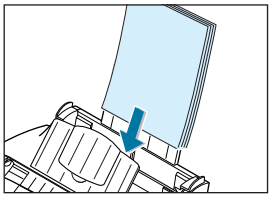

Holds paper.

Manual paper input tray

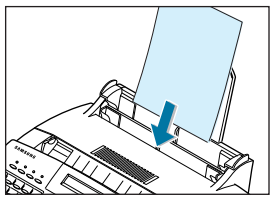

Use to feed paper one sheet at a time.

Paper output tray

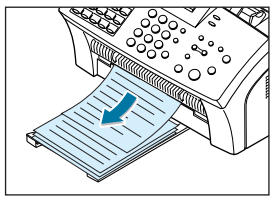

Supports the printed pages.

Identifying Front Panel Features

Look for the following keys and features on the front panel. These features are used to fax documents, make copies, and adjust settings.

LCD Display
Displays messages and menu settings.

Toner
Turns Toner Save mode on or off.

Power
Turns Power Save mode on or off. Also, allows you to set up the Power Save option when held down.

Paper
Turns Paper Save mode on or off. Also, allows you to set up the Paper Save option when held down.

Toll
Allows you to send the Toll Save fax. Also, allows you to set up the time and destination for Toll Save fax when held down.

Twenty One-Touch Buttons
Store frequently dialled fax numbers.

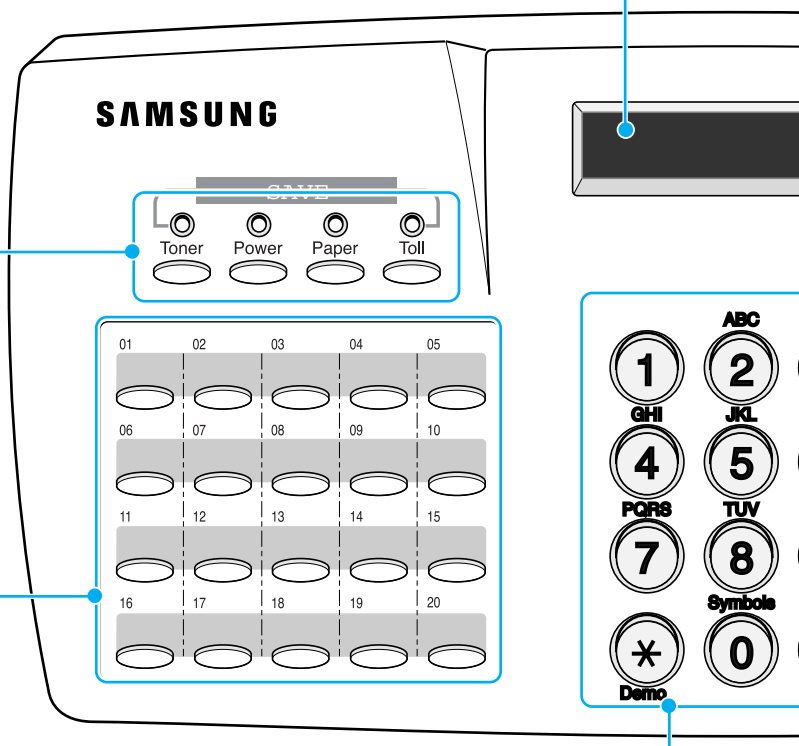

Number Keypad
Use to enter fax numbers manually or to enter letters.

Speed (#)
Use to send documents by entering a registered 2-digit number.

Demo (*)
Prints a demo page to test your machine.

Rcv. Mode/Contrast
When a document is loaded, choose the contrast characteristic of copied or transmitted documents.
When a document is not loaded, choose the receive mode to use.
The selected mode is displayed in Standby mode.

Resolution
Choose the resolution of documents.

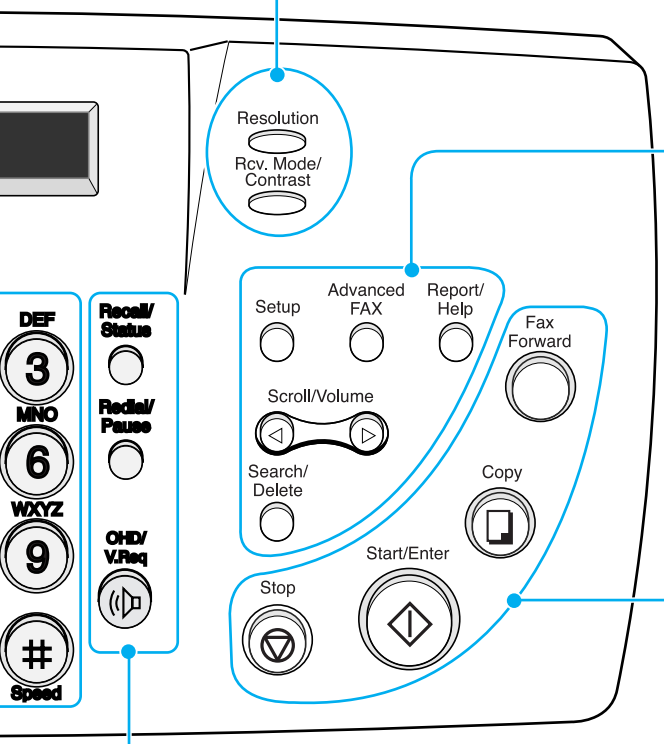

Setup
Use to set up various system options.

Advanced FAX
Use to access advanced fax operations.

Report/Help
Use to print various reports and the help list.

Scroll/Volume
Use to scroll the menu items or use to move the cursor left or right through the display. Also, use to adjust the ringer volume.

Search/Delete
Use to search for a number in memory or to delete the last digit when typing text.

Fax Forward
Allows you to forward the received faxes to the defined remote fax machine at a specified duration.

Copy
Makes a copy of a document.

Start/Enter
Starts a job. Also use to activate the selection shown on the display.

Stop
Stops an operation at any time.

Recall(R or Flash)/Status
Performs a switch-hook operation. Also use to switch the display status while performing dual jobs.

Redial/Pause
Use to redial the last fax number or to insert a pause into a fax number.

OHD/V.Req
Use to dial numbers without picking up the handset. Also use to make a voice call after sending or receiving a fax.

Identifying Connecting Parts and Others

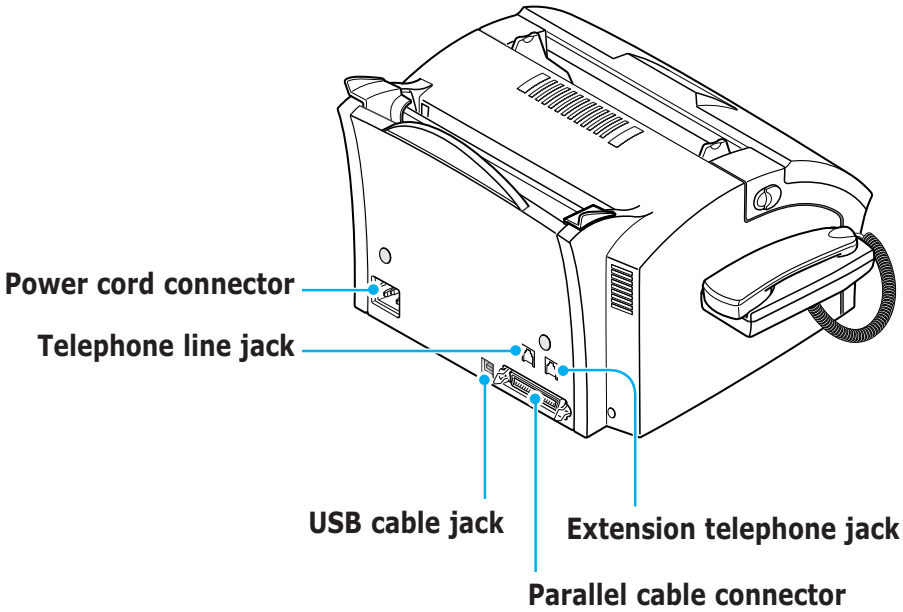

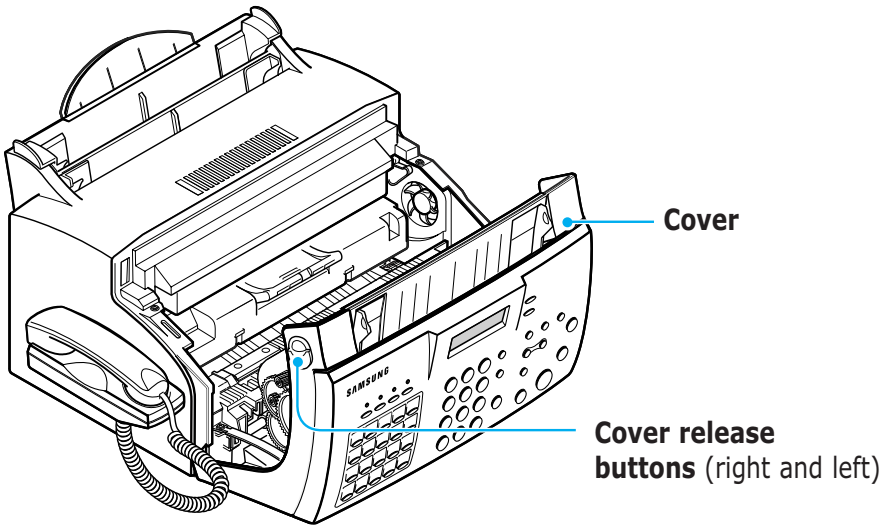

Setting Up Your Machine

Choosing a Location

For the trouble-free operation of your machine, place it on a flat, stable surface near your workstation. Leave enough space to allow for easy paper loading and exiting, as well as opening the front cover.

Do not place your machine:

- In direct sunlight.
- Near heat sources or air conditioners.
- In a dusty or dirty environment.

Preparing Your Machine for Use

When you take the SF-555P out the box, note that it has been packaged to protect it during shipping. Before you use the machine, make certain that you check for the following items:

- Remove all tapes.
- Remove all packing materials.

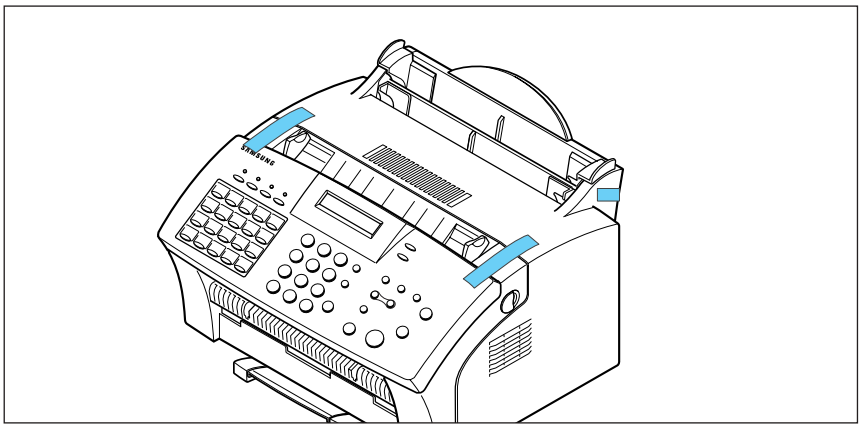

Attaching the Supports

Document Input Support

Insert the document input support with the groove pointing to the rear top of the machine.

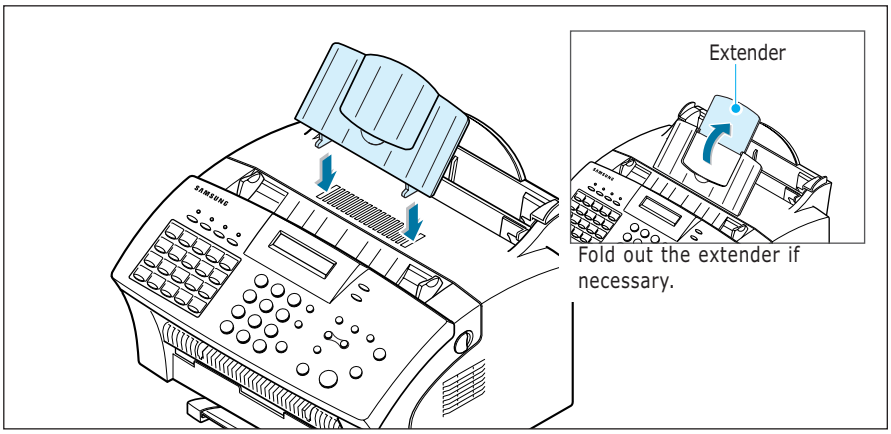

Document Output Support

Insert the two tabs on the document output support into the slots on the front of your machine.

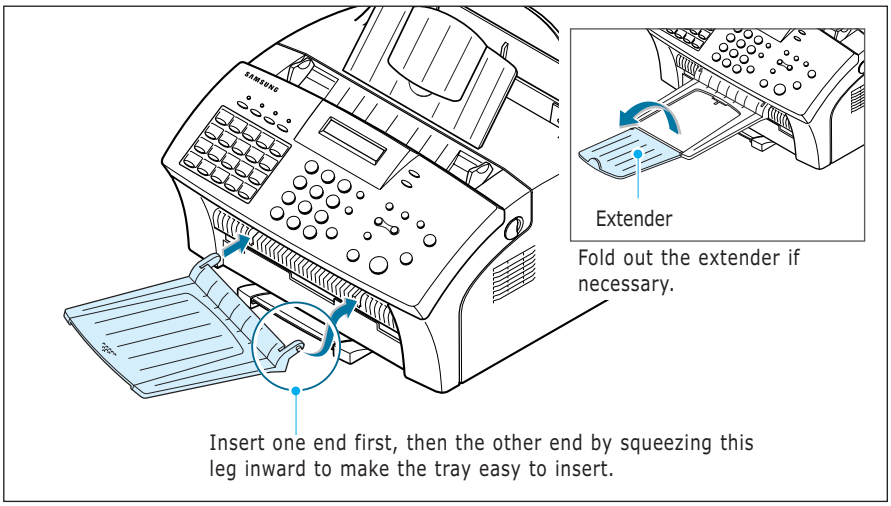

Note: The SF-555P is shipped with the paper output tray already installed. Extend the tray to use.

Fold out the extender if necessary.

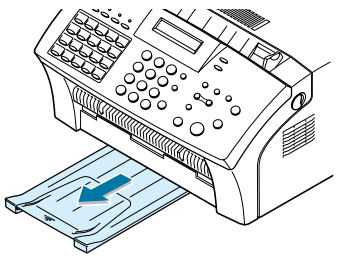

Handset and Handset Cradle

1. Plug the end of the coiled cord of the handset into the jack on the left side of your machine.

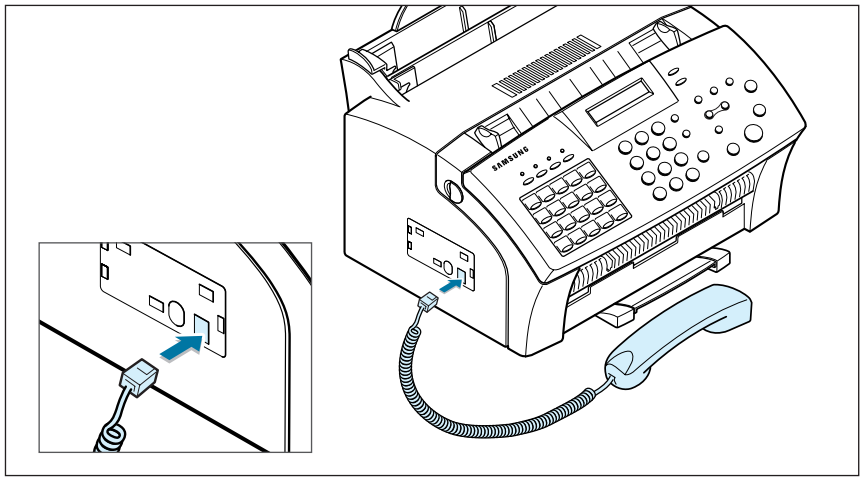

2. Hold the cradle using your hand as shown.

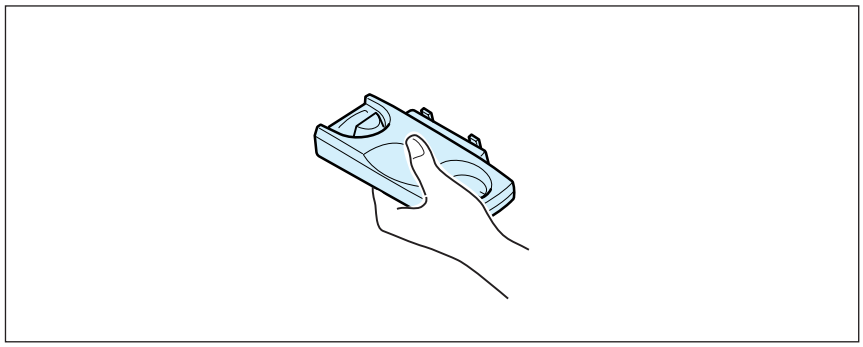

3. Attach the handset cradle to the main body.

   Insert the two tabs of the cradle into the slots on the left side of the machine as shown, and while pressing part Ⓐ on the bottom of the cradle, push the cradle toward the machine until it clicks into place.

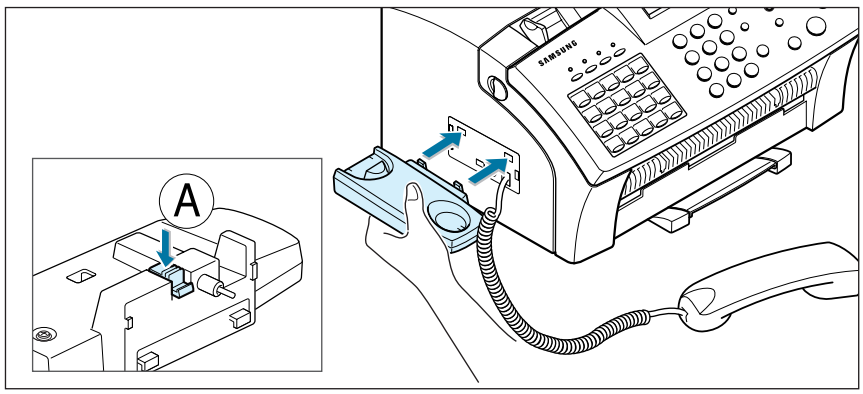

Notes:

- If you want to remove the cradle, while pushing up the part Ⓐ, on the bottom of the cradle, slide the cradle down, then take it out.

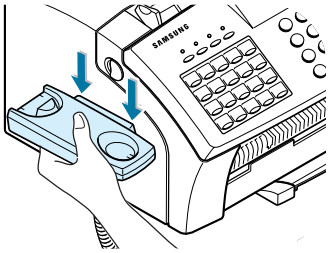

Connecting to the Phone Line

For proper operation, the SF-555P must be connected to the wall jack. Once you have decided which wall jack you will be using, check a box below and follow the instructions.

☐ **I only have one phone line coming to this wall jack.** (This includes two phone numbers on one line with distinctive ring service.) Go to "To Connect to a Wall Jack that Has Only One Phone Line" on next page.

☐ **I have two phone lines coming to this wall jack.** Go to "To Connect to a Wall Jack that Has Two Phone Lines" on page A.2.

To Connect to a Wall Jack that has Only One Phone Line

1. Plug the included telephone cord into the jack on the back of the unit marked the word **LINE**.

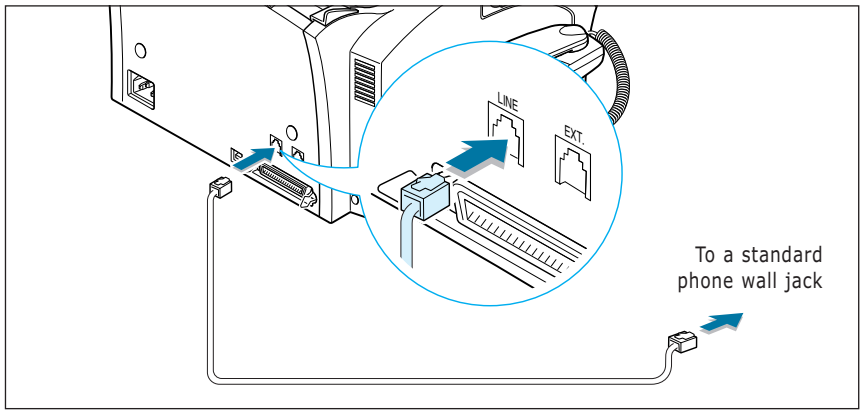

2. If a telephone cord is plugged into the wall jack, unplug the cord and set it aside.

3. Plug the other end of the phone cord into the wall jack.

Notes:

- If you are connecting other devices such as a telephone to the phone line, go to Appendix "Connecting Other Devices To the Phone Line" on page A.1.
- If you are not connecting other devices, go to "Plugging In the Power" on page 1.15.

To Connect to a Wall Jack that Has Two Phone Lines

1. Plug the included telephone cord into the jack on the back of the unit marked the word **LINE**.

2. If a telephone cord is plugged into the wall jack, unplug it and set it aside.

3. If you do not have a wall jack that has a built-in splitter, plug a phone unit splitter (not included) into the wall jack.

4. Plug the cord into the side of the phone unit splitter for the fax number.

Notes:

- If you are connecting other devices such as a telephone to the same phone line, go to Appendix "Connecting Other Devices To the Phone Line" on page A.1.
- If you are not connecting other devices, go to "Plugging In the Power" on page 1.15.

Connecting to the Computer

Your machine has a parallel and a USB interface port which allow use with a Windows PC.

Connecting to the Computer Using the Parallel interface

1. Plug the supplied parallel printer cable into the connector on the back of your machine. Push the metal clips down to fit inside the notches on the cable plug.

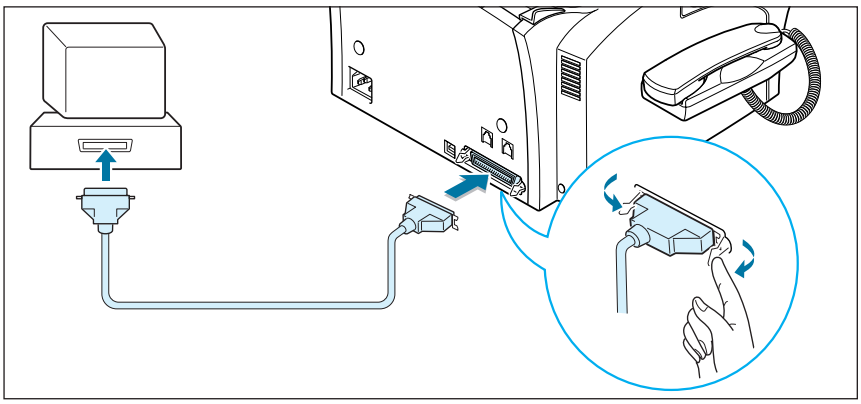

2. Connect the other end of the cable to the parallel interface port on your computer. See your computer documentation for more information.

Connecting to the Computer Using the USB interface

If you have a USB (Universal Serial Bus) port enabled on your computer, and if your computer is running Windows 98, you can connect your SF-555P to the USB chain of devices.

To use your machine using the USB cable, see page 2.8.

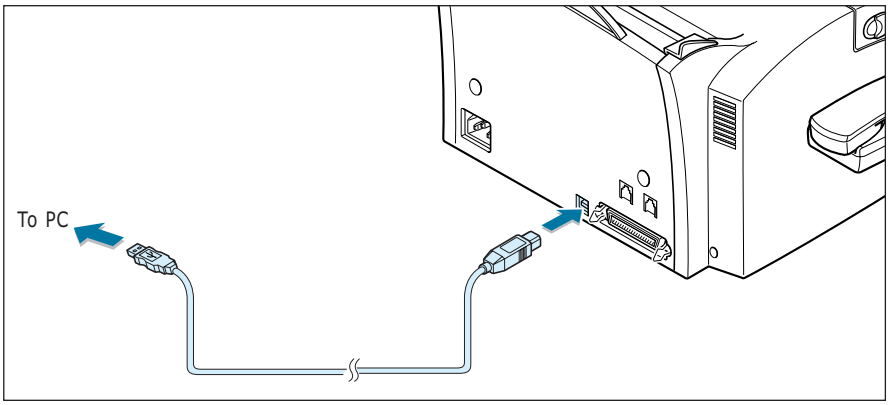

Plugging In the Power

Plug one end of the cord into the back of the machine and the other end into a standard AC power outlet.

The SF-555P will turn on and the display will show 'SYSTEM INITIAL'. If there is no paper loaded, the displays will shows 'NO PAPER.' then if there is no cartridge installed, the display will show 'JAM/NO CARTRIDGE'.

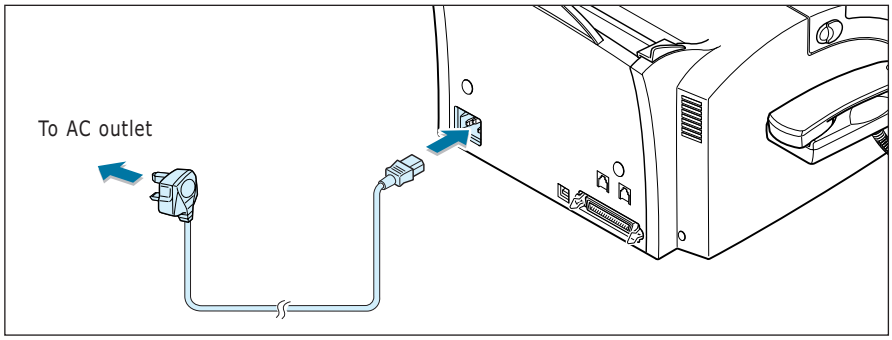

To turn off, unplug the power cord.

Loading Paper

For best results, use high quality xerographic paper. The automatic paper input tray can hold a maximum of 150 sheets of plain paper. The maximum capacity may be less, depending on the paper thickness.

Note: For stand-alone copy and fax operations, the SF-555P product supports A4, letter, and legal paper. After loading paper, make sure that you select the correct paper size. For more information on setting the paper size, see 'Setting User-Selectable System Options' on page 3.2.

1. Pull the paper input support completely out of the unit.

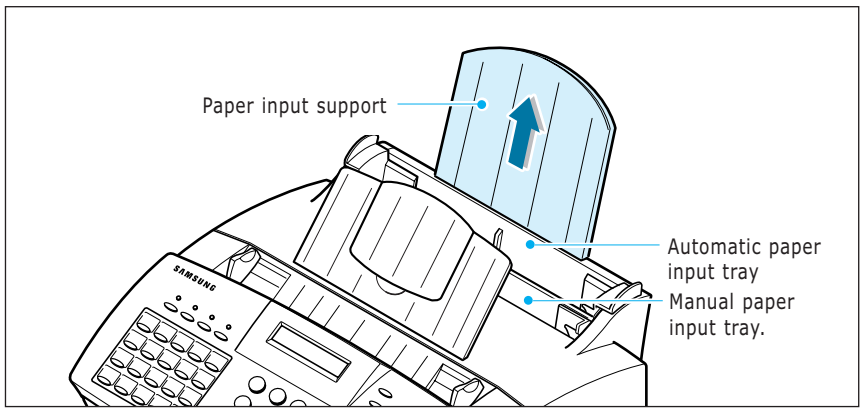

2. Remove a stack of paper from its packaging. Tap the stack on a flat surface to even it up.

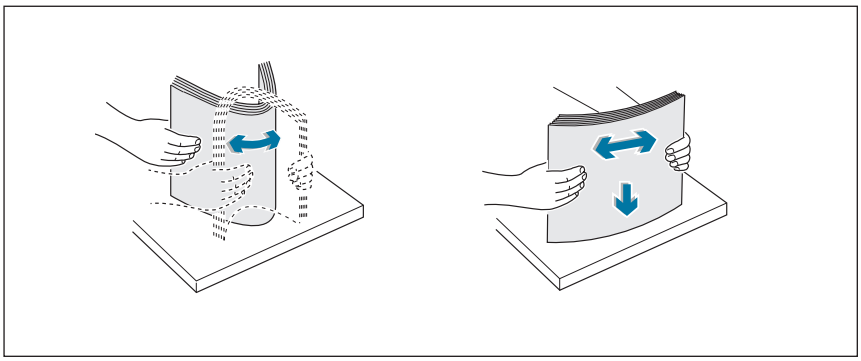

3. Insert the paper with the print side facing you.

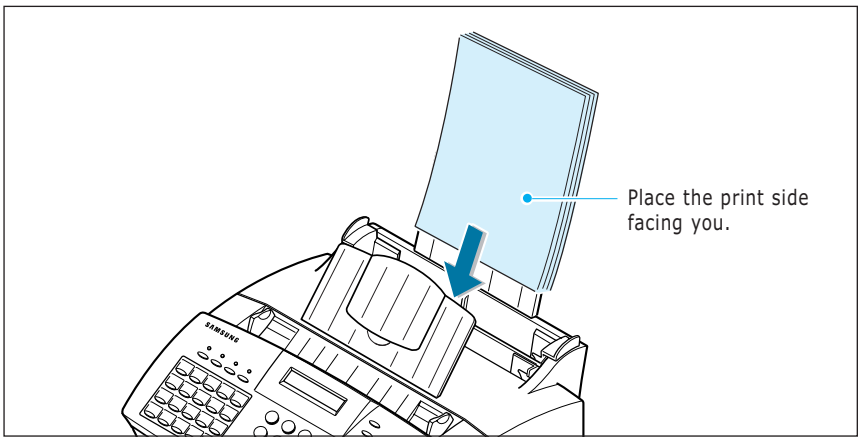

4. Adjust the paper guides to the width of the print media. Slide the guides until they lightly touch the stack of print media. Do not bend the print material.

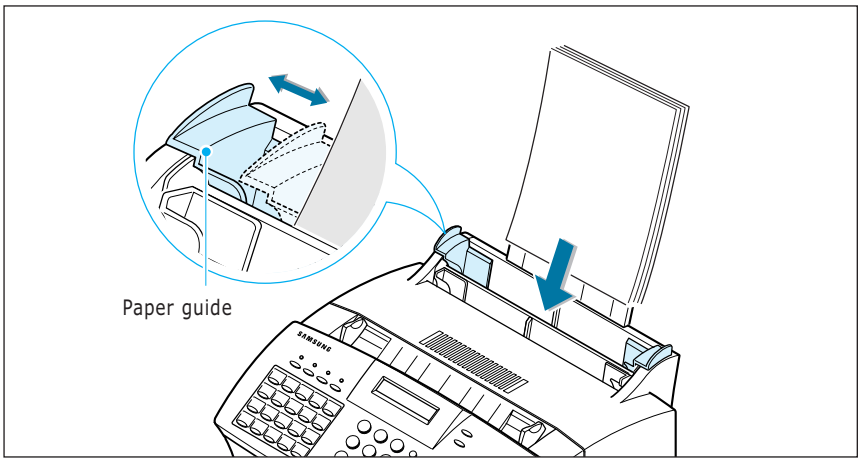

Paper Type and Size

Satisfactory print and receive quality can be obtained with many types of plain paper. Since the quality of plain paper varies widely, test the print quality before buying large quantities of paper. Your machine uses a variety of papers including:

- Xerographic paper
- Bond paper
- Dual-purpose paper

Because all papers vary in physical characteristics, you can receive mixed results from different packages of paper even through the packages contain the same paper. If you encounter undesirable results, try the other side of the paper, a different type, or another package of the same kind of paper.

DO NOT use the following types of paper with your machine:

- Continuous form feed paper
- Synthetic paper
- Thermal paper
- Multi-sheet forms and documents
- Chemically treated paper
- Papers with raised, embossed lettering

To load paper with a preferred print side:

- If you are using xerographic paper, load the paper with the preferred print side facing down.
- If you are using letterhead or bond paper, load the paper with the preferred side facing up.

The following papers can be used in your machine for fax:

- Letter : 216 x 279 mm (8.5 x 11.0 in.) - 60 g/m^2 ~ 90 g/m^2 (16 ~ 24 lb)
- A4 : 210 x 297 mm (8.3 x 11.7 in.) - 60 g/m^2 ~ 90 g/m^2 (16 ~ 24 lb)
- Legal : 216 x 356 mm (8.5 x 14.0 in.) - 60 g/m^2 ~ 90 g/m^2 (16 ~ 24 lb)

Installing the Toner Cartridge

1. Pulling the cover release buttons found on both sides of the machine toward you, open the cover.

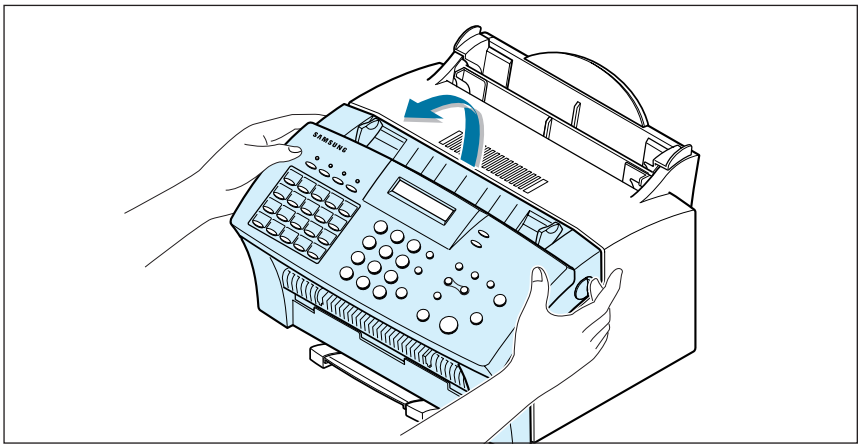

2. Unpack the cartridge from its plastic bag, and then remove the paper rolled the cartridge.

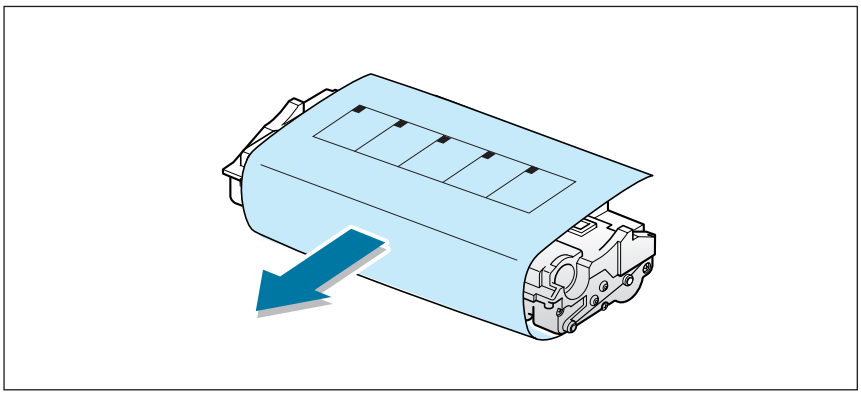

3. Shake the cartridge from side to side 5 or 6 times to redistribute the toner evenly inside the cartridge.

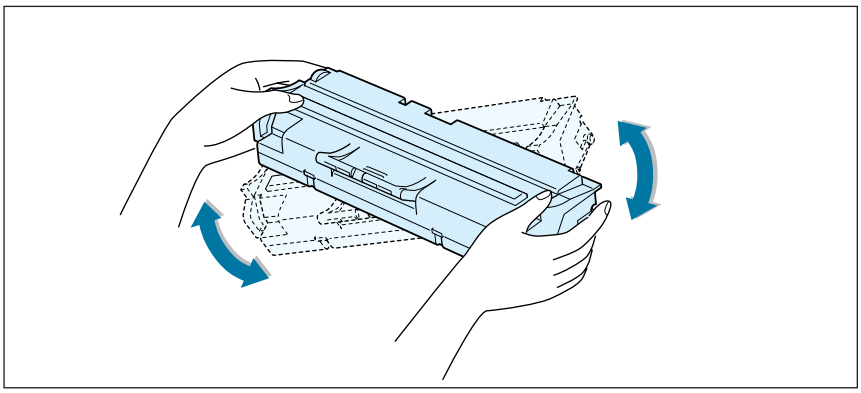

4. Find the cartridge slots inside the machine, one on each side.

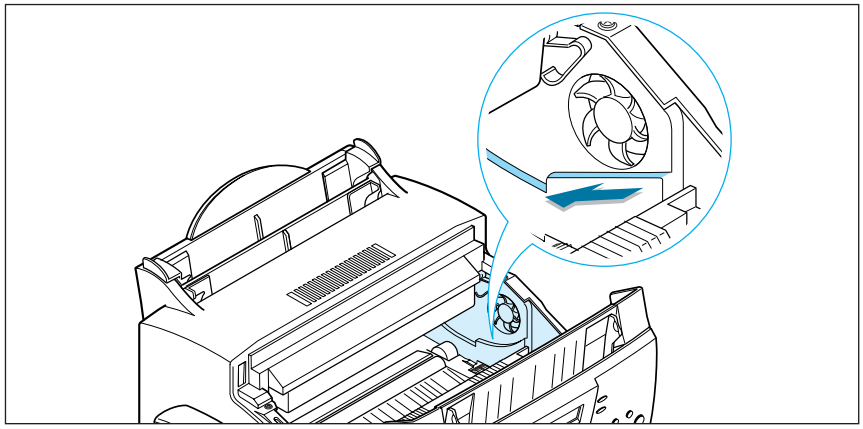

5. Grasp the handle at the front of the cartridge and slide it down between the cartridge slots, and push it firmly.

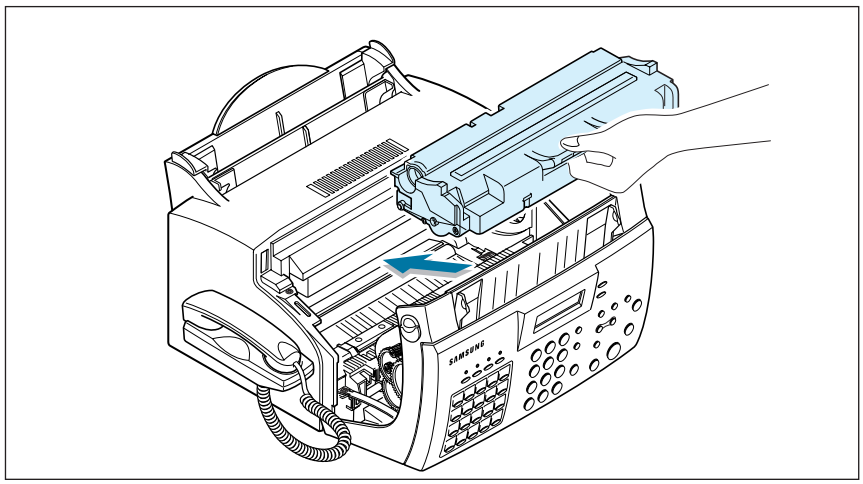

6. Close the cover. Make sure that the cover is securely closed.

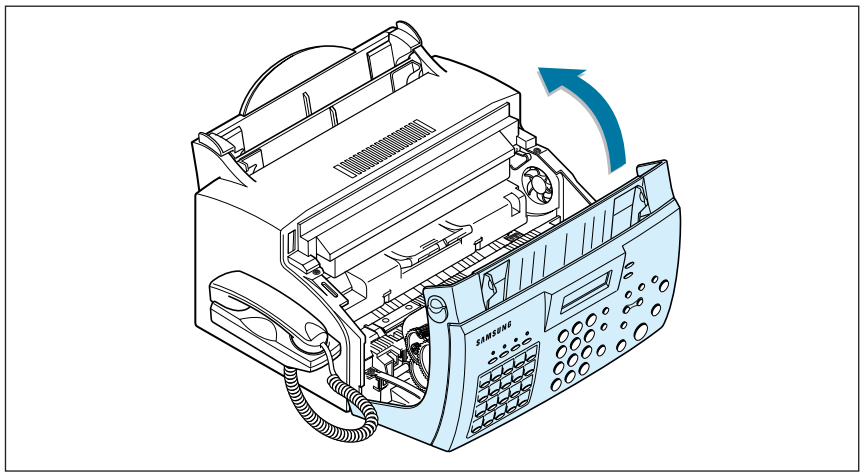

Setting the Date and Time

The current date and time are shown on the display when the machine is on and ready for use (Standby mode). The date and time are printed on all transmitted faxes.
When you install the SF-555P for the first time, or when the product is without power for about 15 seconds, the display prompts you to reset the date and time.

SET DATE & TIME

1. Press **Setup** on the front panel. the display shows the first setup menu; FAX NUMBER/NAME.

2. Press ◀ or ▶ until 'TIME/DATE SETUP' appears, then press **Start/Enter** to access the Time/Date Setup menu.

3. The display asks you to choose a date format. Press **Start/Enter**.

4. Press ◀ or ▶ until you find the desired date format, then press **Start/Enter**.

   If you select USA, the date appears in format of Month-Day-Year. The EUROPE format will be displayed in format of Day-Month-Year.

   The display shows the currently set date and time using the selected date format and asks you to set the month.

   04-01-2001 10:30 (EUROPE Format)

5. Enter the correct date and time for each item using the number keypad. Each time you enter the appropriate number, the display asks you to enter the next item in the following order: MONTH, DATE, YEAR, HOUR, and MINUTE.

   Enter the time in 24-hour format. For example, enter 2230 for 10:30 P.M.

   If you enter an invalid number, the display does not proceed to the next step. If this happens, re-enter the correct number.

6. When you are finished, press **Start/Enter** to save the setting. The display returns to Standby mode and shows the date and time you have set.

   19-MAR 12:30 FAX (EUROPE Format)

Setting Your Fax Number and Name

Your fax number and name can be printed at the top of each page transmitted.

1. Press **Setup** on the front panel. The display shows the first setup menu; FAX NUMBER/NAME.

2. Press **Start/Enter** to access the Fax Number/Name menu.
   The display shows 'FAX NUMBER.'

3. Press **Start/Enter**.
   If there is a number already set, the number appears.

   TEL:_

4. Enter the telephone number your machine is connected to. You can enter up to 20 digits.

   Press * for plus sign (+) and # for a hyphen. If you entered a wrong number, press **Search/Delete** to delete it.

5. Press **Start/Enter** when the number on the display is correct.
   If there is a name already set, the name appears.

   NAME:_

6. Enter your name using number keypad. You can enter up to 40 characters.

   For details on how to use the number keypad to enter alphanumeric characters, see page 3.19.

7. Press **Start/Enter** when the name on the display is correct.

Testing the Machine

After installation, you may want to run a simple test on your machine by printing out a demo page.

Press and hold down **Demo** (*) button on the front panel for 2 seconds, and the machine begins printing a demo page.

Using Save Modes

There is four saving mode buttons on the front panel of the series. Using these buttons, you can save toner and power consumption, paper for printing, and toll for the fax call.

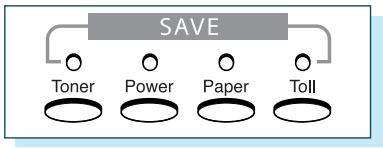

Toner Save Mode

Toner Save mode allows the machine to use less toner on each page.

Press **Toner** on the front panel to turn this mode on or off.

- If the LED is on, Toner Save mode activates and the machine uses less toner by 50% to print a page. Using this mode will extend the life of your toner cartridge and reduce your cost per page, but will reduce print quality.
- If the LED is off, Toner Save mode deactivates and the machine prints in the normal mode.

Power Save Mode

Power Save mode allows you to save the power consumption.

Press **Power** on the front panel to turn this mode on or off.

- If the LED is on, Power Save mode activates and the machine will go to a reduced power state. But it takes long to receive incoming faxes for warming up the machine.
- If the LED is off, Power Save mode deactivates and the machine keeps ready to operate with the minimum warm-up time. This uses more energy to keep your machine warm and ready to print.

To specify how long the machine waits before going to the Power Save mode, press and hold down **Power**, and select the desired time length among **5MIN**, **10MIN** and **15MIN** using ◀ or ▶. Selecting **OFF** turns the Power Save mode off.

Note: Although you turned Power Save mode off by pressing **Power**, it activates if you have set the time length.

Paper Save Mode

With Paper Save mode on, you can save paper by reducing the data and printing two pages on one sheet of paper when copying or printing received document.

Press **Paper** on the front panel to turn this mode on or off.

- If the LED is on, Paper Save mode activates and the machine prints two pages on one sheet of paper when receiving a fax or making a copy of a document. The odd pages will be printed at the bottom of the paper. and the even pages at the top of the paper.

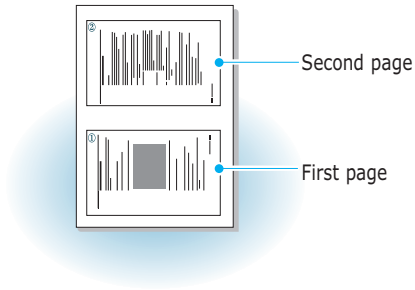

- If the LED is off, Paper Save mode deactivates.

To set up the Paper Save mode option, press and hold down **Paper**, and select the desired option. The following options are available;

2-UP COPY: Uses Paper Save mode only for copying a document. Select **ON** or **OFF** using ◄ or ►.
2-UP FAX: Uses Paper Save mode only for receiving faxes. Select **ON** to or **OFF** using ◄ or ►.

Notes:
- The data will be reduced in vertical and horizontal at the same rate depending on the paper size you chose in the Fax Paper Size setup menu (see page 3.3).
- In case of receiving photo image, the 2-up fax printing image would be degraded by reduction.

Toll Save Mode

Toll Save mode allows you to save the toll for the telephone call by transmitting the document stored in memory during the time slot when the call charge is discounted.

For more information on Toll Save fax, see page 3.37.

chapter 2

Installing Samsung Software

This chapter provides information on installing the supplied Samsung software. You **MUST** install the Samsung software to use your machine as a printer and scanner.

The topics included in this chapter are:

Samsung SmarThru

- About Samsung SmarThru Software

Installing Software

- System Requirements
- Installing the Samsung Software
- Installing the USB Driver in Windows 98/Me
- Uninstalling Samsung Software

Samsung SmarThru

About Samsung SmarThru Software

You must install software using the supplied CD-ROM after you have set up your machine and connected it to your computer. The CD-ROM includes:

- Samsung software
- User's Guides
- Adobe Acrobat Reader

The CD-ROM provides you with the following software:

Windows MFP Driver

To use your machine as a printer and scanner from Windows, you must install the MFP driver. For information about installing the MFP driver in Windows, see page 2.4.

Remote Control Panel

It is automatically installed when you install the MFP driver.

USB Driver

You must first install the USB driver for the USB connection in Windows 98/Me. For information about installing the USB driver, see page 2.8. In Windows 2000/XP, the USB port is provided so that you don't have to install the USB driver. Just install the MFP driver.

SmarThru Software

SmarThru is the accompanying software for your multifunctional machine. SmarThru contains a powerful image editor that allows you to edit images in many ways and also includes powerful Internet mail client software.

With SmarThru, you can save the scanned images in a dedicated storage area for subsequent editing, sending via e-mail or fax, printing, and processing by other programs of your choice.

OCR Software (AnyPage Lite)

OCR (Optical Character Recognition) is the software that has the ability to recognize most character formats, so that a scanned document can be read and edited on your word processor.

Installing Software

System Requirements

Before you begin, ensure you have the following computer setup:

Minimal requirements:

- **Operating systems**: Windows 95 OSR2/Windows 98/Windows 98 SE/Windows Me/Windows NT 4 Workstation or Server with Service Pack 3/Windows 2000 Professional or Advanced Server/Windows XP Home edition or Professional.
- **Disk space:** 120 MB for installation
- **Memory:** 64 MB
- **CPU:** Pentium II 233 or higher
- **Required software:** Internet Explorer 4.01

Recommended

- **Operating systems:** Windows 95 OSR2/Windows 98/Windows 98 SE/Windows Me/Windows NT 4 Workstation or Server with Service Pack 3/Windows 2000 Professional or Advanced Server/Windows XP Home edition or Professional..
- **Disk space:** 1220 MB for installation
- **Memory:** 128 MB
- **CPU:** Pentium II 200
- **Required software:** Pentium II 400 or higher

- **User rights:** Administrative rights should be set for installation on Windows NT and Windows 2000/Windows XP.

Note: Windows 95 versions prior to OSR2 are not recommended due to compatibility with OLE/COM libraries.

Installing the Samsung Software

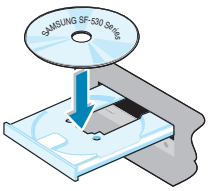

Notes:

- Cancel the "New Hardware Found" screen when the computer boots up.
- Make sure that your machine is plugged in and connected toyour computer's parallel port or USB port before installing software. Windows 95 and Windows NT 4.0 do not support the USB connection.

1. Insert the supplied CD-ROM into your CD-ROM drive.

   The CD-ROM should automatically run and the installation window appears.

   If the installation window does not appear, click **Start**, and then **Run**. Type **X:Autorun.exe**, replacing "**X**" with the letter of your drive, and click **OK**.

2. When the opening window appears, click **SF-555P**.

3. If you are asked to select the language, choose the desired language.

4. Click **Install the Samsung Software on your PC.**

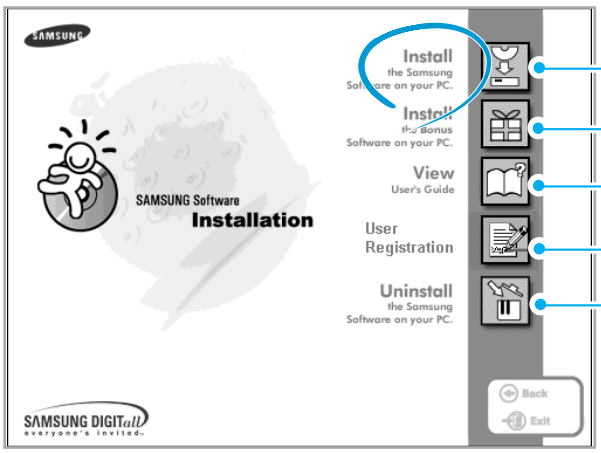

5. Follow the on-screen instructions and click **Next**.

5. The SmarThru installation supports three types of setup:
   - **Typical**: Program will be installed with the most common options and is recommended for most users.
   - **Compact**: Only the MFP driver will be installed.
   - **Custom**: You may choose the options you want to install. Recommended for advanced users.

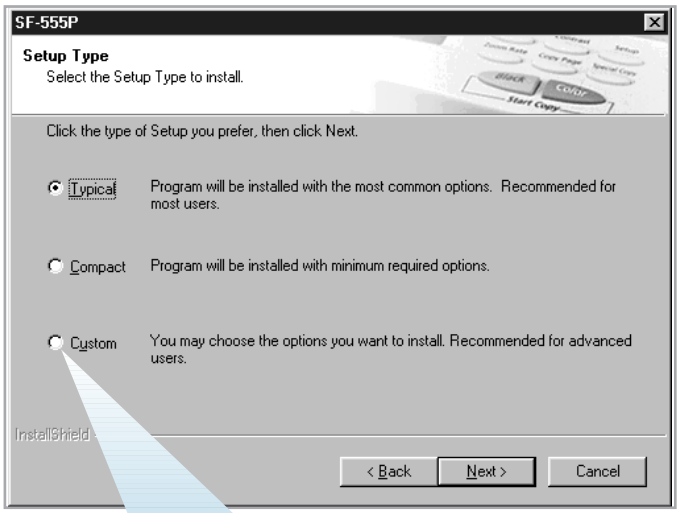

If you select the **Custom** installation, you may choose the options you want to install.

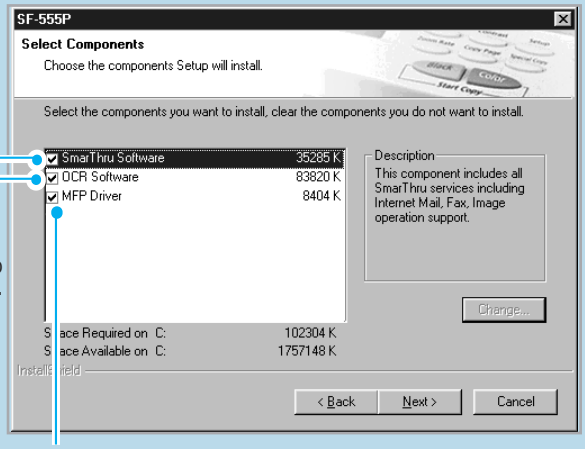

SmarThru software to scan and edit images and work with electronic documents.

AnyPage Lite software to enable OCR.

MFP driver to print and scan.

6. Selecting the type, Click **Next**.

7. Choosing the **SmarThru networking** option allows you to share the modems on your computer and the machine as a scan device via a network or to access similar devices on other computers.

   Stand-alone configuration does not allow you to use any networking features such as Remote Fax or Remote Scan service.

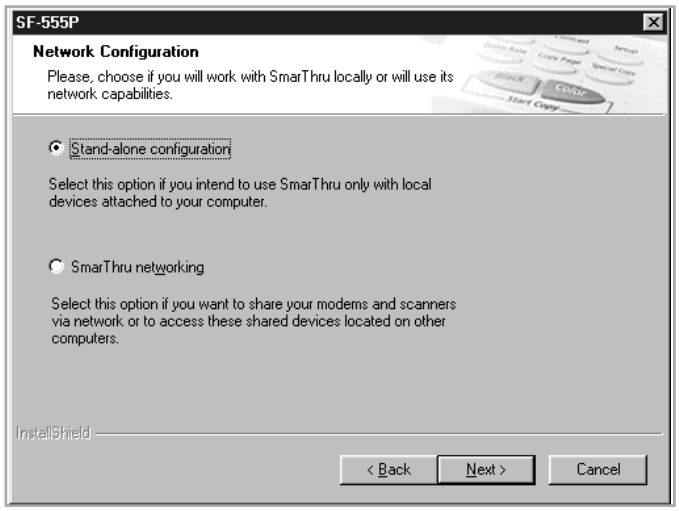

   If you selected **SmarThru networking**, you can elect to install it as a Server, a Client, or both.

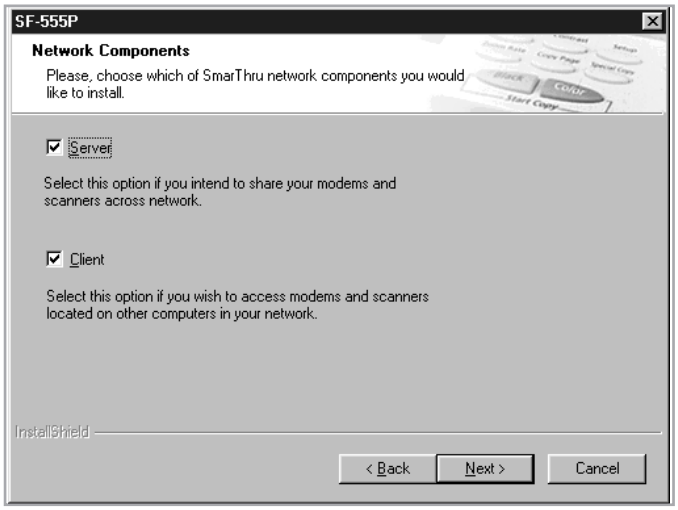

   The **Server** option allows you to share a local fax modem and/or a scanner over a LAN. You can control sharing by managing a remote service user. The **Client** option allows you to use Remote Fax or Remote Scan services provided by a SmarThru Server over a LAN. You need to have a client account provided by the server. For details on Remote Fax/Scan Services, please refer to the SmarThru User's Guide.

8. Click **Next**.

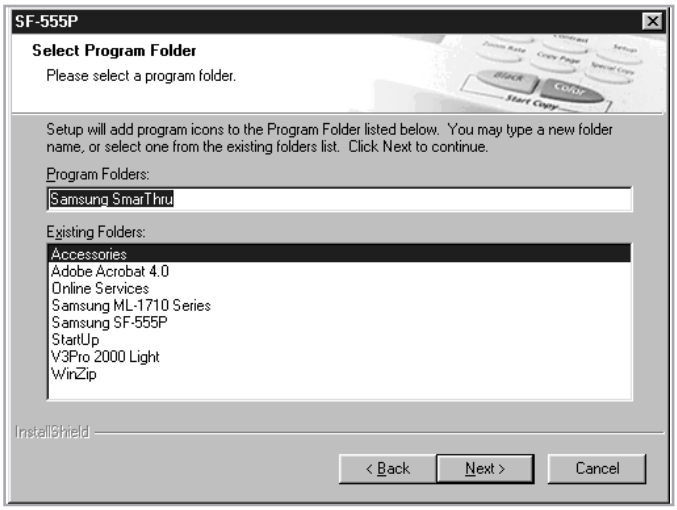

9. When installation is finished, shut down and restart your computer.

   If your computer does not shut down and restart automatically, you must shut it down manually and restart it before the changes will be saved.

Note: When you install the software, the Digital Signature Not Found window appears in Windows 2000 and Windows XP. Click OK in Windows 2000 and click Continue Anyway in Windows XP.

Installing the USB Driver in Windows 98/Me

If you have a USB (Universal Serial Bus) port enabled on your computer, you can connect your SF-555 series to the USB chain of devices.

1. Make sure that both the printer and computer are turned ON.

2. Plug one end of the USB cable into the USB port on the printer and the other end into the USB port ( ) on the computer.

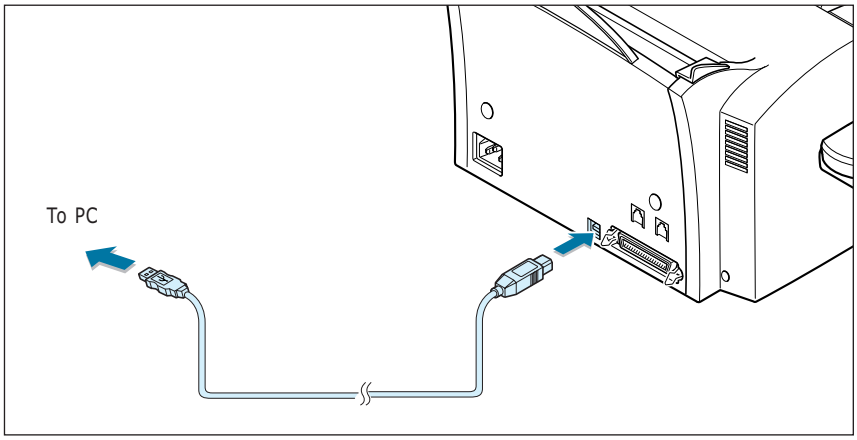

3. The Add New Hardware Wizard dialogue box appears. Click **Next**.

4. Check **Search for the best driver for your device** and click **Next**.

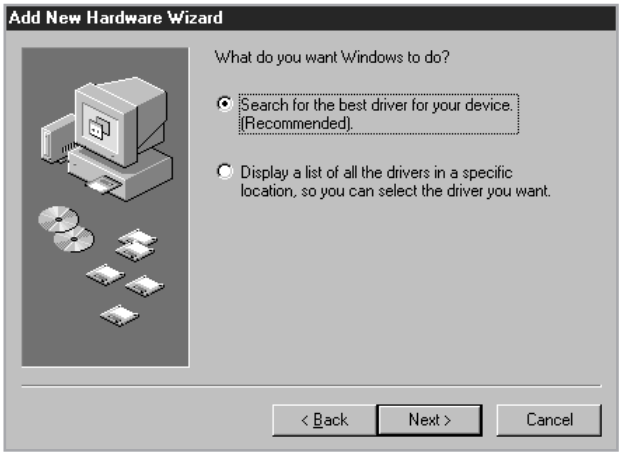

5. Check **CD-ROM drive** and click **Browse**, then choose **x:\USB** (where x is the drive letter for the CD-ROM drive) Click **Next.**

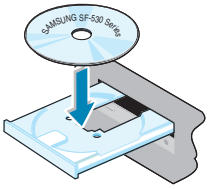

6. Click **Next**. The USB driver will be installed.

7. When installation is finished, click **Finish**.

8. When the opening window appears, click **SF-555P**. Select the appropriate language.

Note: If you already installed the printer software, this window doesn't appear.

9. Follow the instructions on the window to complete the printer software installation. For further details, see page 2.4.

Notes:
- If you want to use your machine with a parallel cable, remove the USB cable and connect the parallel cable. Then reinstall the MFP driver.
- If your machine doesn't work properly, reinstall the MFP driver.

Changing the Display Language

After installing the printer driver, you can change the display language.

1. From the **Start** menu, select **Programs**.

2. Select **Samsung SF-555P** and **Language** Selection.

3. Select the desired language from the **Printer Driver** drop-down list, and click **OK**.

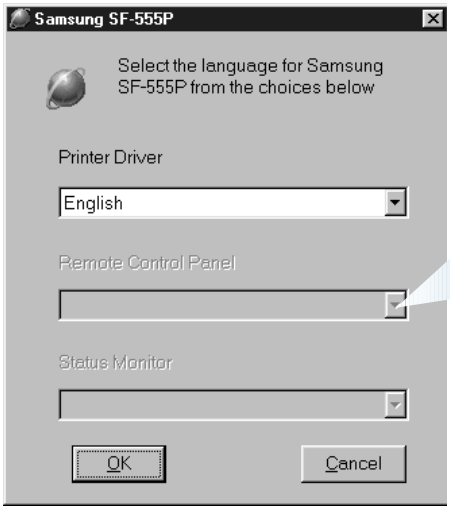

Once you have installed the Remote Control Panel program, this list is activated. You can select a language for the program.

Reinstalling the MFP Driver

1. From the **Start** menu, select **Programs**.

2. Select Samsung SF-555P and then Samsung SF-555P Driver Maintenance.

3. The Samsung SF-555P Driver Maintenance window appears. Click **Repair** and then click **Next**.

4. When reinstallation is done, click **Finish**.

Uninstalling Samsung Software

Uninstall is required if you are upgrading the software or if your installation fails. You can uninstall all software including SmarThru and MFP driver, using the CD-ROM or uninstall the desired item using the Windows unInstallShield.

Note: Before beginning uninstallation, ensure that all applications are closed on your computer. A system reboot is required after the software is uninstalled.

Un-installing the MFP Driver

1. From the **Start** menu, select **Programs**, and then select **Samsung SF-555P.**

2. You can select a component in the MFP driver to uninstall individually.

   If you want to uninstall the scan driver, select **TWAIN Driver Uninstaller**.

   If you want to uninstall the printer driver, select **Samsung SF-555P Driver Maintenance.** When the Samsung SF-555P Driver Maintenance window appears, check **Remove** and then click **Next**.

   If you want to uninstall the Remote Control Panel, select **Uninstall SF-555P Remote Control Panel.**

3. When your computer ask you to confirm your selection, click **Yes.**

   The selected driver and all of its components are removed from your computer.

4. When uninstallation is done, click **OK.**
   The message window recommends restarting your computer.

5.Click OK and restart Windows.

Uninstalling Samsung SmarThru

1. From the **Start** menu, select **Programs**.

2. Select **Samsung SmarThru**, and then select **SmarThru 3 Uninstall**.

3. When your computer asks you to confirm your selection, click **Yes**. The Uninstall Options window appears.

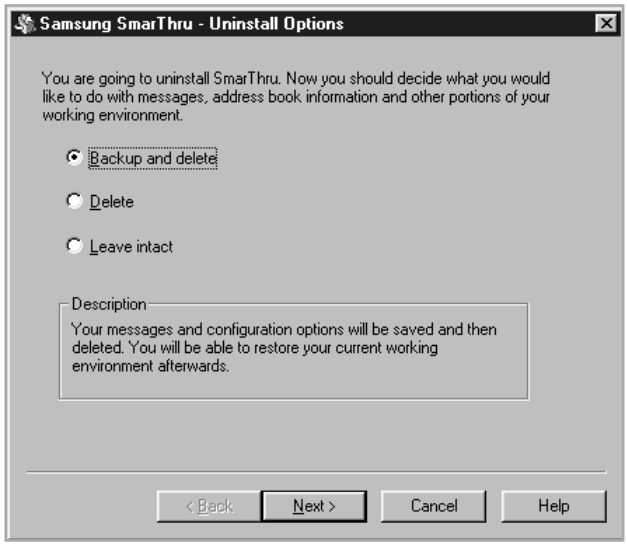

Uninstall options are:

- **Backup and delete**: Backs up all your data and options to a safe place. It then removes SmarThru systems including the data.

- **Delete**: Deletes all the SmarThru data and options. No backup or copying takes place. Be careful while using this option as you can easily lose your data.

- **Leave intact**: Uninstalls SmarThru software leaving data and options intact. This can be useful, if, for example, you decide to install the Stand Alone configuration over the SmarThru Networking. In this case, uninstall Samsung SmarThru having the Leave intact option set and install the SmarThru Stand Alone configuration.

4.After selecting the uninstall option, click Next.

5. Follow the on-screen instructions to complete the uninstallation. The SmarThru software and all components will be removed.

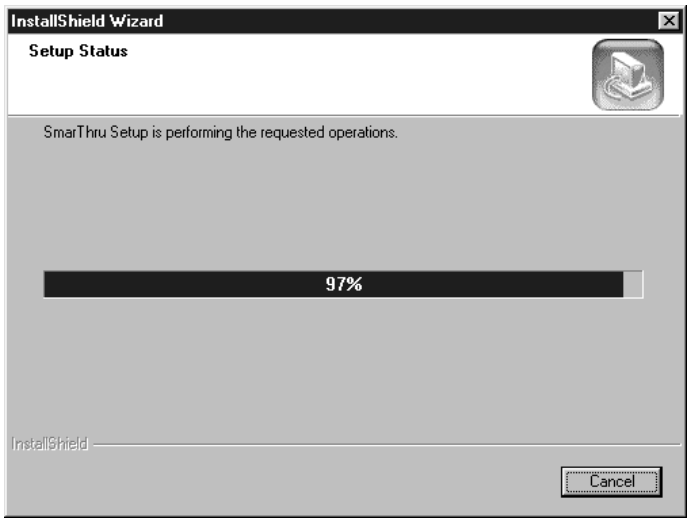

6. When the uninstallation is done, click OK. The message window recommends restarting your computer.

7 Click **OK**.

Shut down and restart your computer to complete the un-installation process and save your changes.

Using the SmarThru CD-ROM

You can uninstall all of the MFP driver, the Remote Control Panel and the SmarThru software with the CD-ROM you have used to install them.

1. Insert the supplied CD-ROM into your CD-ROM drive.

   The CD-ROM should automatically run and the installation window appears. If the installation window does not appear, select **Run** from the **Start** menu, then type **X:Autorun.exe**, replacing "**X**" with the letter of your drive and click **OK**.

2. When the opening window appears, click **SF-555P**.

3. If you are asked to select the language, choose the desired language.

4. Click **Uninstall the Samsung Software on your PC**

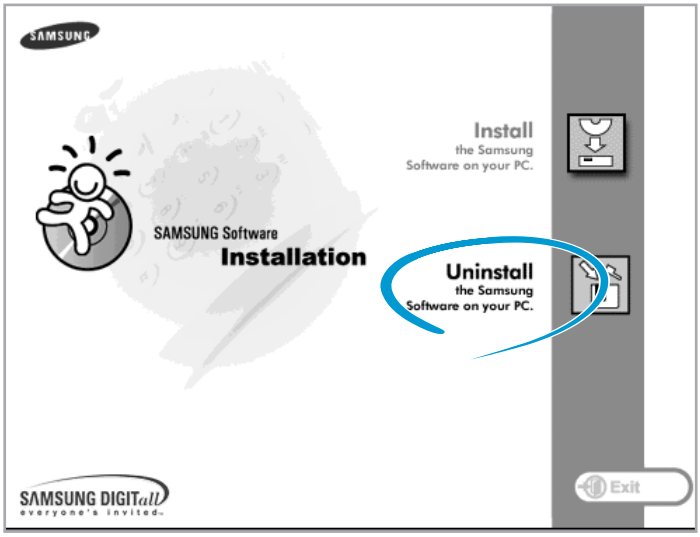

5. Follow the on-screen instructions to complete uninstallation.

   You must shut down and restart your computer before any changes you have made will take effect.

Installing Samsung Software

Samsung SmarThru

About Samsung SmarThru Software

You must install software using the supplied CD-ROM after you have set up your machine and connected it to your computer. The CD-ROM includes:

- Samsung software
- User's Guides
- Adobe Acrobat Reader

The CD-ROM provides you with the following software:

Windows MFP Driver

To use your machine as a printer and scanner from Windows, you must install the MFP driver. For information about installing the MFP driver in Windows, see page 2.4.

Remote Control Panel

It is automatically installed when you install the MFP driver.

USB Driver

You must first install the USB driver for the USB connection in Windows 98/Me. For information about installing the USB driver, see page 2.8. In Windows 2000/XP, the USB port is provided so that you don't have to install the USB driver. Just install the MFP driver.

SmarThru Software

SmarThru is the accompanying software for your multifunctional machine. SmarThru contains a powerful image editor that allows you to edit images in many ways and also includes powerful Internet mail client software.

With SmarThru, you can save the scanned images in a dedicated storage area for subsequent editing, sending via e-mail or fax, printing, and processing by other programs of your choice.

OCR Software (AnyPage Lite)

OCR (Optical Character Recognition) is the software that has the ability to recognize most character formats, so that a scanned document can be read and edited on your word processor.

Installing Software

System Requirements

Before you begin, ensure you have the following computer setup:

Minimal requirements:

- **Operating systems**: Windows 95 OSR2/Windows 98/Windows 98 SE/Windows Me/Windows NT 4 Workstation or Server with Service Pack 3/Windows 2000 Professional or Advanced Server/Windows XP Home edition or Professional.
- **Disk space:** 120 MB for installation
- **Memory:** 64 MB
- **CPU:** Pentium II 233 or higher
- **Required software:** Internet Explorer 4.01

Recommended

- **Operating systems:** Windows 95 OSR2/Windows 98/Windows 98 SE/Windows Me/Windows NT 4 Workstation or Server with Service Pack 3/Windows 2000 Professional or Advanced Server/Windows XP Home edition or Professional..
- **Disk space:** 1220 MB for installation
- **Memory:** 128 MB
- **CPU:** Pentium II 200
- **Required software:** Pentium II 400 or higher

- **User rights:** Administrative rights should be set for installation on Windows NT and Windows 2000/Windows XP.

Note: Windows 95 versions prior to OSR2 are not recommended due to compatibility with OLE/COM libraries.

Installing the Samsung Software

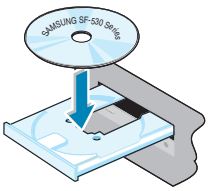

Notes:

- Cancel the "New Hardware Found" screen when the computer boots up.
- Make sure that your machine is plugged in and connected toyour computer's parallel port or USB port before installing software. Windows 95 and Windows NT 4.0 do not support the USB connection.

1. Insert the supplied CD-ROM into your CD-ROM drive.

   The CD-ROM should automatically run and the installation window appears.

   If the installation window does not appear, click **Start**, and then **Run**. Type **X:Autorun.exe**, replacing "**X**" with the letter of your drive, and click **OK**.

2. When the opening window appears, click **SF-555P**.

3. If you are asked to select the language, choose the desired language.

4. Click **Install the Samsung Software on your PC.**

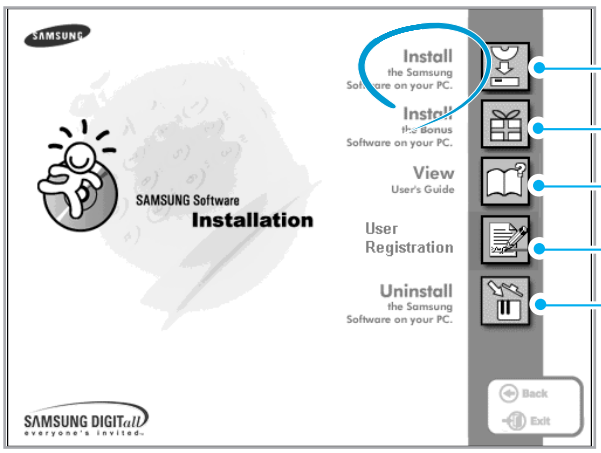

5. Follow the on-screen instructions and click **Next**.

5. The SmarThru installation supports three types of setup:
   - **Typical**: Program will be installed with the most common options and is recommended for most users.
   - **Compact**: Only the MFP driver will be installed.
   - **Custom**: You may choose the options you want to install. Recommended for advanced users.

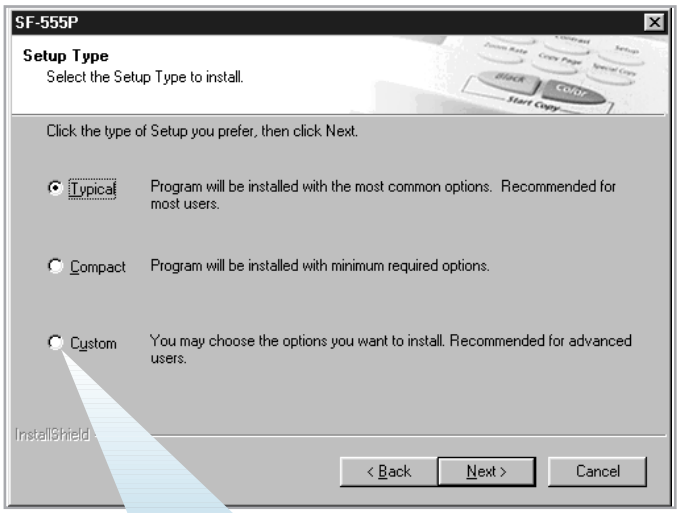

If you select the **Custom** installation, you may choose the options you want to install.

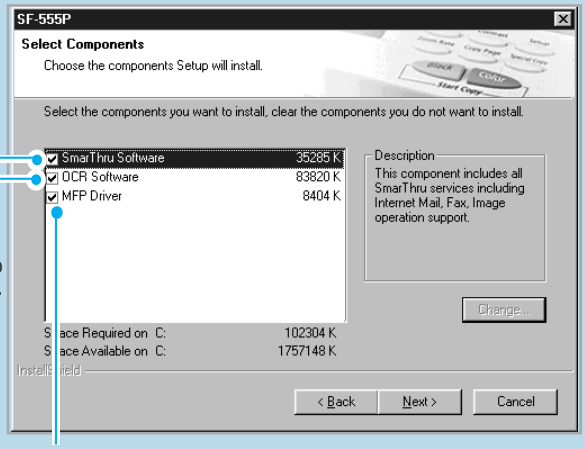

SmarThru software to scan and edit images and work with electronic documents.

AnyPage Lite software to enable OCR.

MFP driver to print and scan.

6. Selecting the type, Click **Next**.

7. Choosing the **SmarThru networking** option allows you to share the modems on your computer and the machine as a scan device via a network or to access similar devices on other computers.

   Stand-alone configuration does not allow you to use any networking features such as Remote Fax or Remote Scan service.

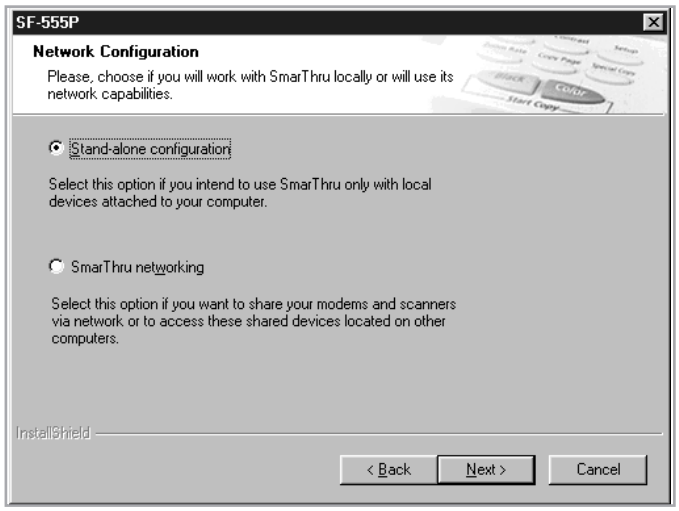

   If you selected **SmarThru networking**, you can elect to install it as a Server, a Client, or both.

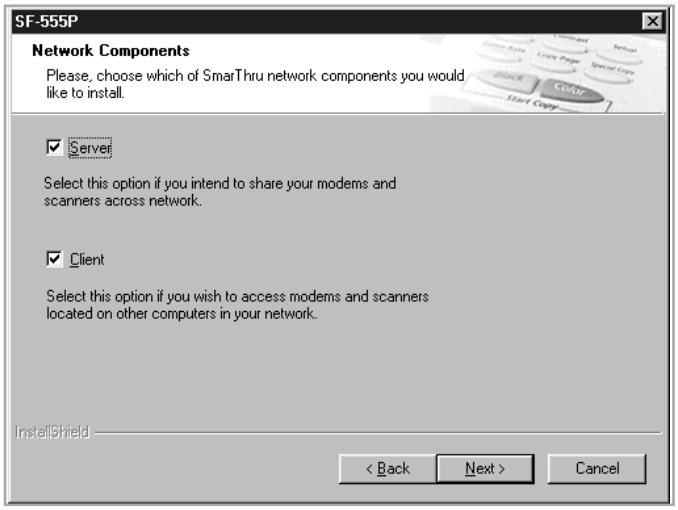

   The **Server** option allows you to share a local fax modem and/or a scanner over a LAN. You can control sharing by managing a remote service user. The **Client** option allows you to use Remote Fax or Remote Scan services provided by a SmarThru Server over a LAN. You need to have a client account provided by the server. For details on Remote Fax/Scan Services, please refer to the SmarThru User's Guide.

8. Click **Next**.

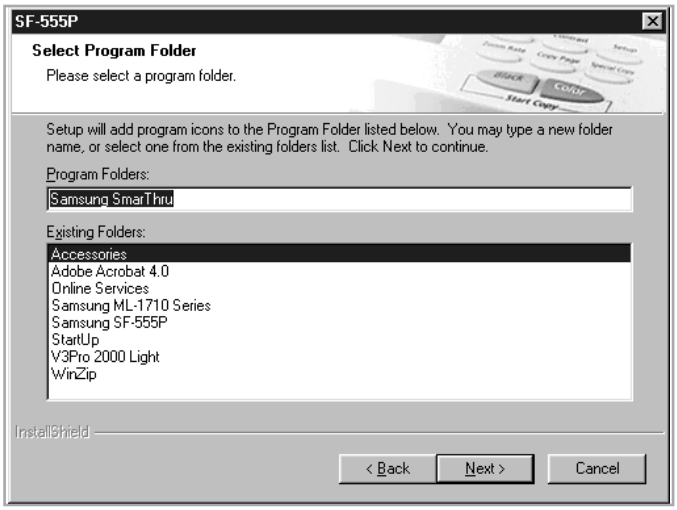

9. When installation is finished, shut down and restart your computer.

   If your computer does not shut down and restart automatically, you must shut it down manually and restart it before the changes will be saved.

Note: When you install the software, the Digital Signature Not Found window appears in Windows 2000 and Windows XP. Click OK in Windows 2000 and click Continue Anyway in Windows XP.

Installing the USB Driver in Windows 98/Me

If you have a USB (Universal Serial Bus) port enabled on your computer, you can connect your SF-555 series to the USB chain of devices.

1. Make sure that both the printer and computer are turned ON.

2. Plug one end of the USB cable into the USB port on the printer and the other end into the USB port ( ) on the computer.

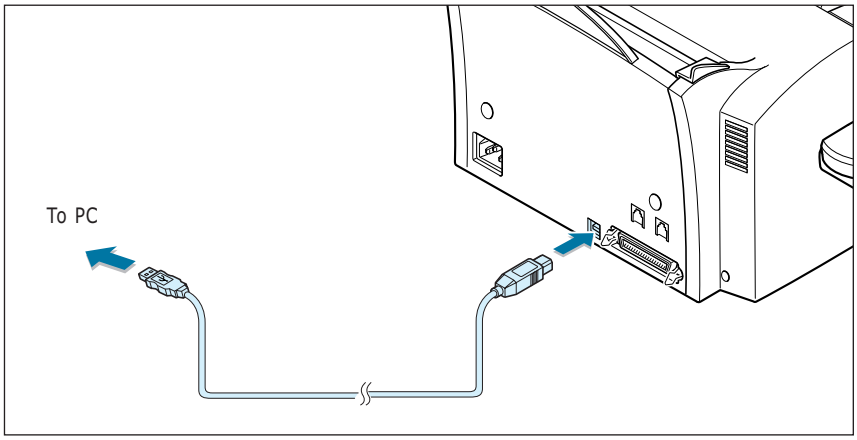

3. The Add New Hardware Wizard dialogue box appears. Click **Next**.

4. Check **Search for the best driver for your device** and click **Next**.

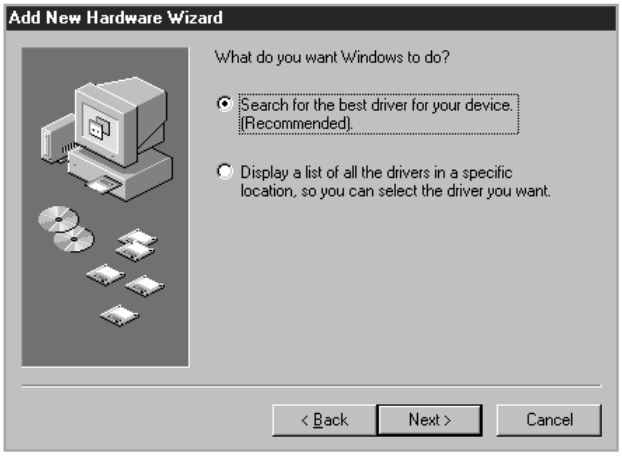

5. Check **CD-ROM drive** and click **Browse**, then choose **x:\USB** (where x is the drive letter for the CD-ROM drive) Click **Next.**

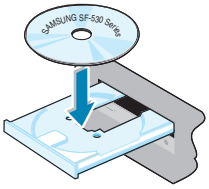

6. Click **Next**. The USB driver will be installed.

7. When installation is finished, click **Finish**.

8. When the opening window appears, click **SF-555P**. Select the appropriate language.

Note: If you already installed the printer software, this window doesn't appear.

9. Follow the instructions on the window to complete the printer software installation. For further details, see page 2.4.

Notes:
- If you want to use your machine with a parallel cable, remove the USB cable and connect the parallel cable. Then reinstall the MFP driver.
- If your machine doesn't work properly, reinstall the MFP driver.

Changing the Display Language

After installing the printer driver, you can change the display language.

1. From the **Start** menu, select **Programs**.

2. Select **Samsung SF-555P** and **Language** Selection.

3. Select the desired language from the **Printer Driver** drop-down list, and click **OK**.

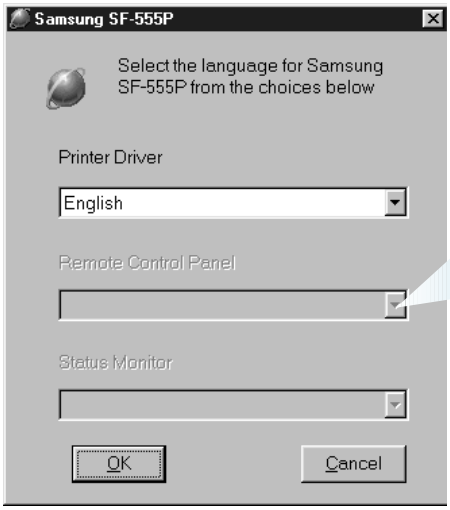

Once you have installed the Remote Control Panel program, this list is activated. You can select a language for the program.

Reinstalling the MFP Driver

1. From the **Start** menu, select **Programs**.

2. Select Samsung SF-555P and then Samsung SF-555P Driver Maintenance.

3. The Samsung SF-555P Driver Maintenance window appears. Click **Repair** and then click **Next**.

4. When reinstallation is done, click **Finish**.

Uninstalling Samsung Software

Uninstall is required if you are upgrading the software or if your installation fails. You can uninstall all software including SmarThru and MFP driver, using the CD-ROM or uninstall the desired item using the Windows unInstallShield.

Note: Before beginning uninstallation, ensure that all applications are closed on your computer. A system reboot is required after the software is uninstalled.

Un-installing the MFP Driver

1. From the **Start** menu, select **Programs**, and then select **Samsung SF-555P.**

2. You can select a component in the MFP driver to uninstall individually.

   If you want to uninstall the scan driver, select **TWAIN Driver Uninstaller**.

   If you want to uninstall the printer driver, select **Samsung SF-555P Driver Maintenance.** When the Samsung SF-555P Driver Maintenance window appears, check **Remove** and then click **Next**.

   If you want to uninstall the Remote Control Panel, select **Uninstall SF-555P Remote Control Panel.**

3. When your computer ask you to confirm your selection, click **Yes.**

   The selected driver and all of its components are removed from your computer.

4. When uninstallation is done, click **OK.**
   The message window recommends restarting your computer.

5.Click OK and restart Windows.

Uninstalling Samsung SmarThru

1. From the **Start** menu, select **Programs**.

2. Select **Samsung SmarThru**, and then select **SmarThru 3 Uninstall**.

3. When your computer asks you to confirm your selection, click **Yes**. The Uninstall Options window appears.

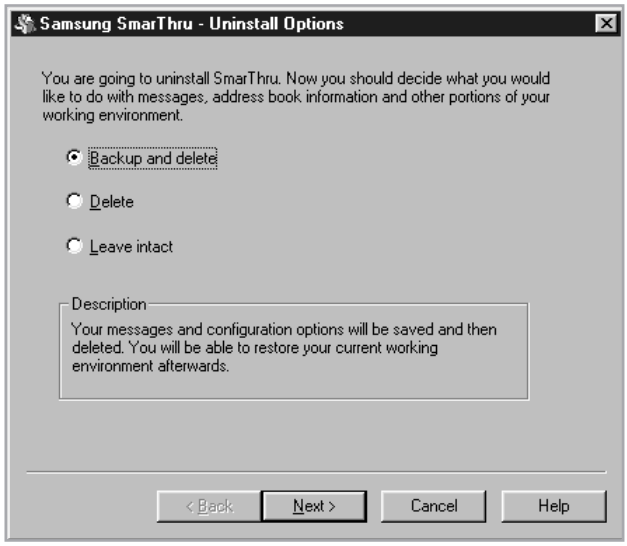

Uninstall options are:

- **Backup and delete**: Backs up all your data and options to a safe place. It then removes SmarThru systems including the data.

- **Delete**: Deletes all the SmarThru data and options. No backup or copying takes place. Be careful while using this option as you can easily lose your data.

- **Leave intact**: Uninstalls SmarThru software leaving data and options intact. This can be useful, if, for example, you decide to install the Stand Alone configuration over the SmarThru Networking. In this case, uninstall Samsung SmarThru having the Leave intact option set and install the SmarThru Stand Alone configuration.

4.After selecting the uninstall option, click Next.