Setting Paper Properties

Use the following options to set the basic paper handling needs when you access the printer properties. See page 4.9 for more information on accessing printer properties.

Click the **Paper** tab to access various paper properties

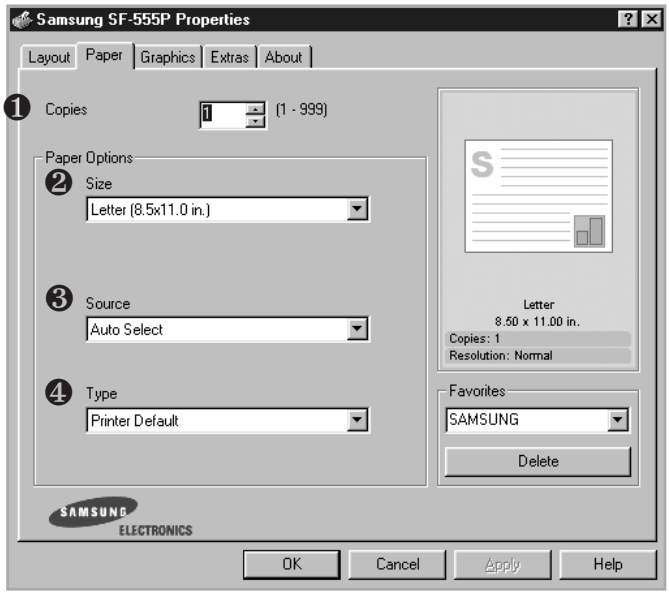

Property	Description
❶ Copies	**Copies** allows you to choose the number of copies to be printed. You can enter up to 999.
❷ Size	The **Size** option allows you to choose the size of paper loaded in the tray.

Property	Description
❸ Source	Make sure that **Source** is set to the corresponding paper tray. The **Manual Feed** source is used when printing to special materials. You have to load one sheet at a time into the Bypass Tray. If the paper source is set to **Auto Select**, the machine automatically picks up print materials according to the following order: the Bypass tray and the paper tray.
❹ Type	Make sure that **Type** is set to **Printer Default**. If you load a different type of print materials, select the corresponding paper type.

Using the Toner Save Mode

Toner Save mode allows the machine to use less toner on each page. Using this mode will extend the life of your toner cartridge and reduce your cost per page, but will reduce print quality.

Using the control panel button

You can turn on or off the Toner Save mode by pressing the Toner Save button.

From the software application

1. When you change the print settings from your software application, access the printer properties. See page 4.9

2. Click the **Graphics** tab, and select the **Toner Save** option. You can select from:

   - **Printer Setting**: If you select this option, this feature is determined by the setting you've made on the control panel of your machine.

   - **On**: Select this option to allow the machine to use less toner on each page.

   - **Off**: If you don't need to save toner to print a document, select this option.

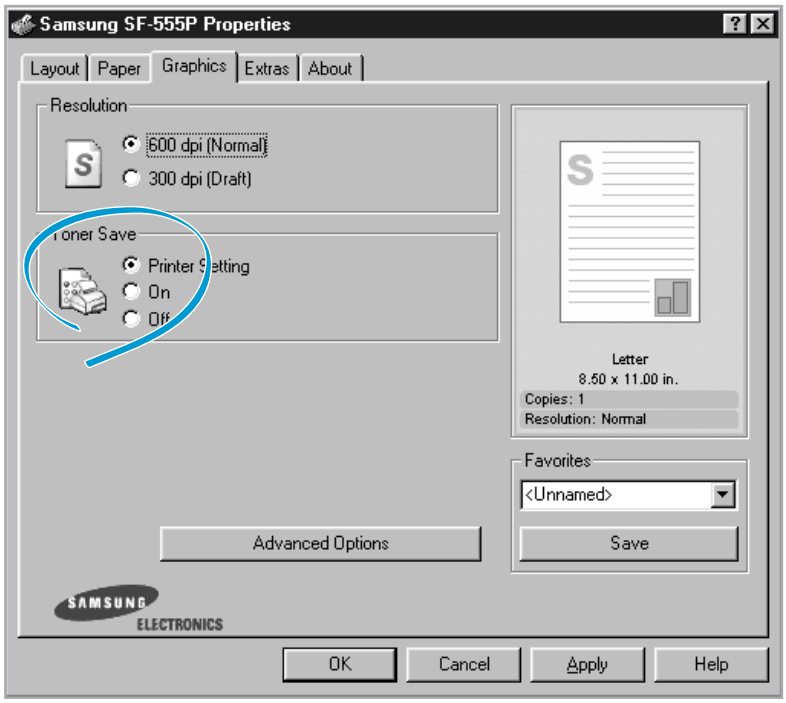

3. Click **OK**.

Note: The setting in the software application overrides that on the control panel.

Printing Multiple Pages on One Sheet of Paper (N-Up Printing)

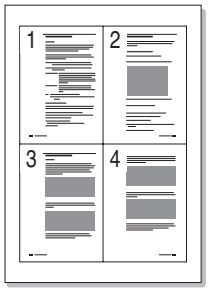

You can select the number of pages to print on a single sheet of paper. To print more than one page per sheet, the pages will appear decreased in size and arranged on the sheet. You can print up to 16 pages on one sheet.

1. To change the print settings from your software application, access the printer properties. See page 4.9

2. From the **Layout** tab, choose **Multiple Pages per Side** in the Type drop-down list.

3. Select the number of pages you want to print per sheet (1, 2, 4, 9 or 16) in the **Pages per Side** drop-down list.

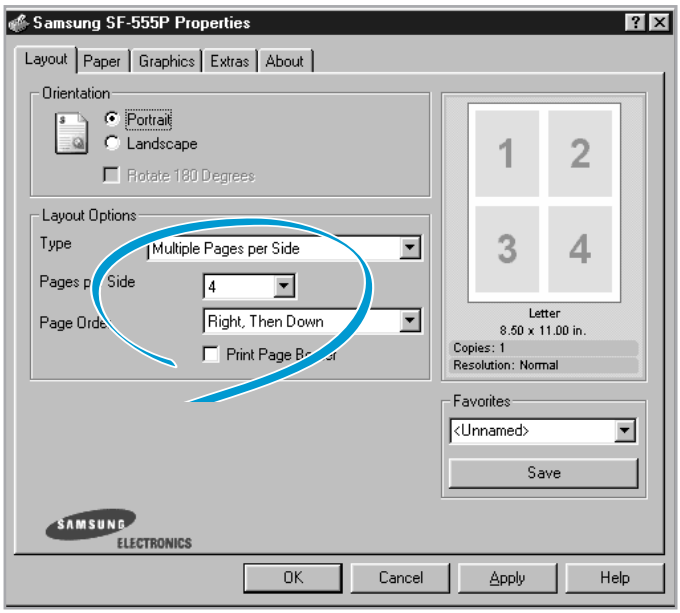

4. Select the **page order** in the Page Order drop-down list., if necessary.

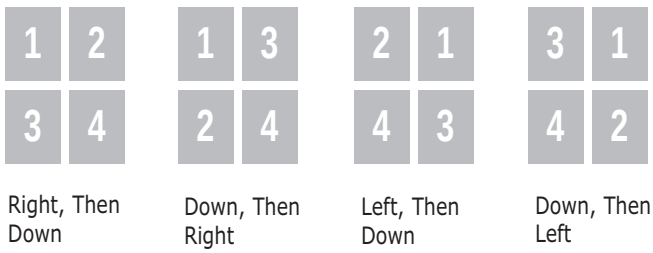

Right, Then Down | Down, Then Right | Left, Then Down | Down, Then Left

Check **Print Page Border** to print a border around each page on the sheet. **Print Page Border** is enabled only, if the pages per sheet is 2, 4, 9, or 16.

5. Click the **Paper** tab and select the paper source, size and type.

6. Click **OK** and print the document.

Printing a Reduced or Enlarged Document

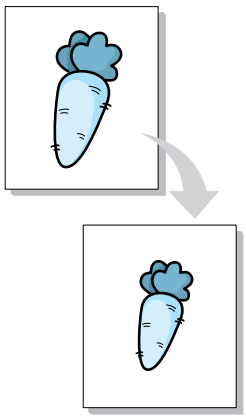

You can scale your print job on a page.

1. When you change the print settings from your software application, access the printer properties. See page 4.9

2. From the **Layout** tab, select **Reduce/Enlarge** in the **Type** drop-down list.

3. Enter the desired scaling rate in the **Persentage** input box.

   You can also click the ▲ or ▼ button.

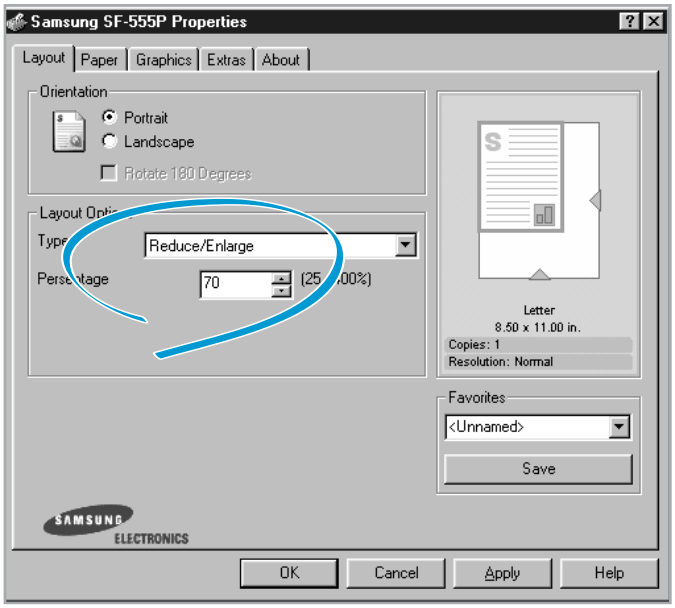

4. Click the **Paper** tab and select the paper source, size and type.

5. Click **OK** and print the document.

Fitting Your Document to a Selected Paper Size

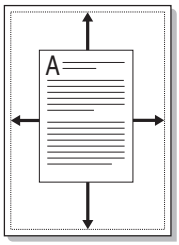

You can scale your print job to any selected paper size regardless of the digital document size. This can be useful when you want to check fine details on a small document.

1. When you change the print settings from your software application, access the printer properties. See page 4.9

2. From the **Layout** tab, select **Fit to Page** in the **Type** drop-down list.

3. Select the correct size from the **Target Paper** drop-down list.

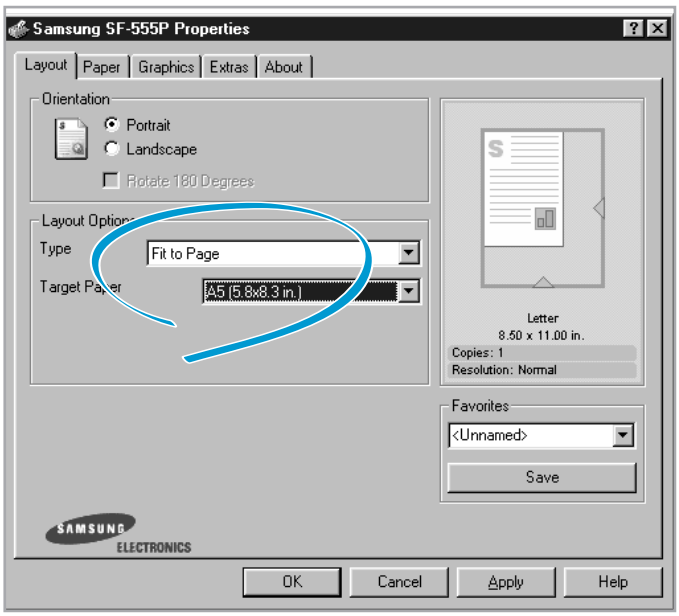

4. Click the **Paper** tab and select the paper source, size and type.

5. Click **OK** and print the document.

Printing Posters

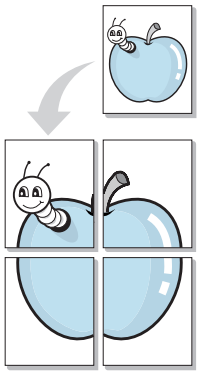

You can print a single-page document onto 4, 9 or 16 sheets of paper, for the purpose of pasting the sheets together to form one poster-size document.

1. When you change the print settings from your software application, access the printer properties. See page page 4.9

2. From the **Layout** tab, select **Poster** in the **Type** drop-down list.

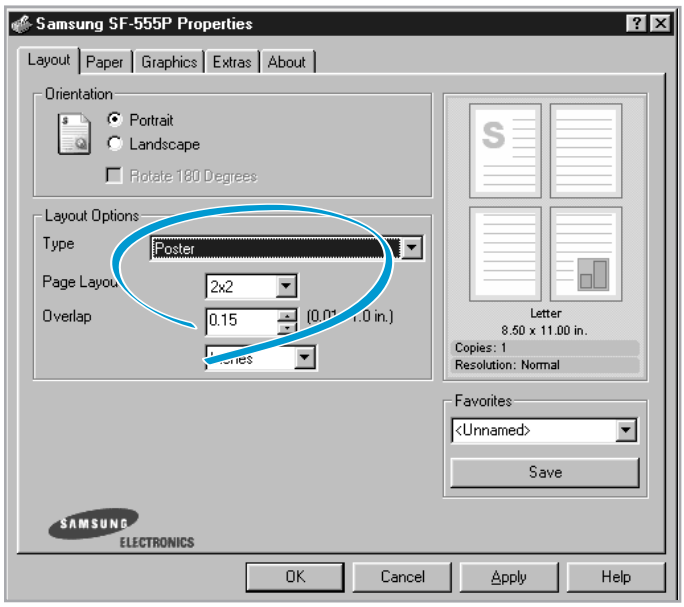

3. Configure the poster option:

   You can select the page layout from 2x2, 3x3 or 4x4. If you select 2x2, the output will be automatically stretched to cover 4 physical pages.

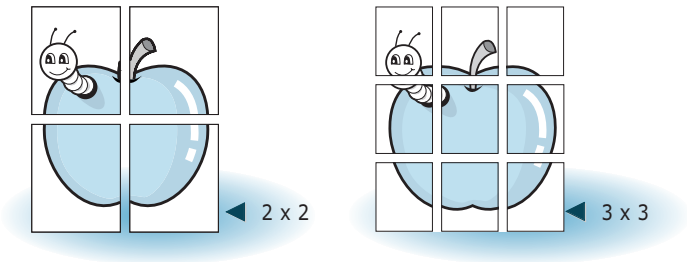

Specify an overlap in millimeters or inches to make it easier to reconstruct the resulting poster.

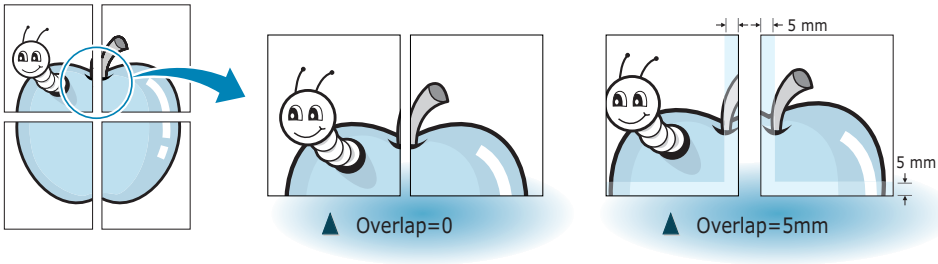

4. Click the **Paper** tab and select the paper source, size and type.

5. Click **OK** and print the document. You can complete the poster by reconstructing the results.

Using Watermarks

The Watermark option allows you to print text over an existing document. For example, you may want to have large gray letters reading "DRAFT" or "CONFIDENTIAL" printed diagonally across the first page or all pages of a document.

There are several predefined watermarks that come with your printer, and they can be modified or you can add new ones to the list.

Using an Existing Watermark

1. When you change the print settings from your software application, access the printer properties. See page 4.9

2. Click the **Extras** tab, and select the desired watermark in the **Watermark** drop-down list. You will see the selected watermark in the preview image.

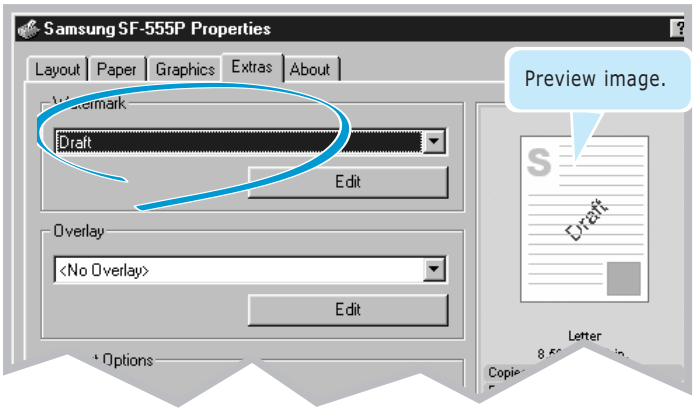

3 Click **OK**, then start printing.

Creating a Watermark

1. When you change the print settings from your software application, access the printer properties. See page 4.9

2. Click the Extras tab, and click the Edit button in the Watermark section. The Edit Watermarks window appears.

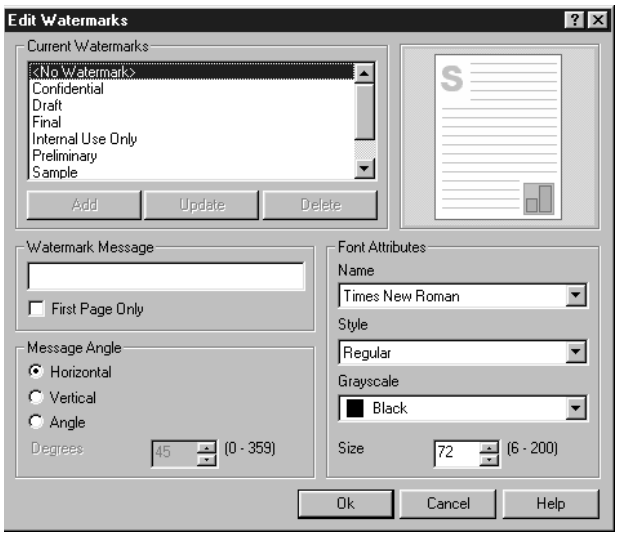

3. Enter the desired text message in the **Watermark Message** box.

   This will be displayed in the preview window. The preview image is provided so that you can see how the watermark will appear on the printed page.

   If the **First Page Only** box is checked, the watermark will be printed on the first page only.

4. Select the desired watermark options.

   You can select the font name, style and size and grayscale level from the **Font Attributes** section and set the angle of the watermark from the **Message Angle** section.

5. Click **Add** to add a new watermark to the list.

6. When you finish editing, click **Ok** and start printing.

   To stop printing the watermark, select <**No Watermark**> in the **Watermark** drop-down list.

Editing a Watermark

1. When you change the print settings from your software application, access the printer properties. See page 4.9.

2. Click the **Extras** tab, and click the **Edit** button in the Watermark section. The Edit **Watermarks** window appears.

3. Select the watermark you want to edit in the **Current Watermarks** list, and change the watermark message and the options. Refer to "Creating a Watermark" on page 4.22.

4. Click **Update** to save the changes.

5. Click **Ok.**

Deleting a Watermark

1. When you change the print settings from your software application, access the printer properties. See page 4.9

2. From the **Extras** tab, click the **Edit** button in the Watermark section. The Edit **Watermarks** window appears.

3. Select the watermark you want to delete in the **Current Watermarks** list and click **Delete**.

4. Click **Ok.**

Using Page Overlays

What is an Overlay?

An overlay is text and/or images stored in the computer HDD as a special file format that can be printed on any document you choose. Overlays are often used to take the place of preprinted forms and letterhead paper. Rather than using preprinted letterhead, for example, you can create an overlay containing the exact same information as is currently on your letterhead. Then when you want to print a letter with your company's letterhead, you do not need to load preprinted letterhead paper in the printer. You need only to tell the printer to print the letterhead overlay on your document.

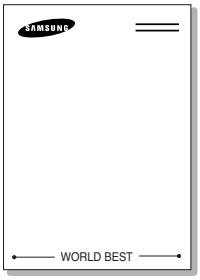

Creating a New Page Overlay

To use a page overlay, you must create a new page overlay containing your logo or image.

1. Create or open a document containing text or an image for use in a new page overlay. Position the items exactly as you wish them to appear when printed as an overlay. If needed, save the file for later use.

2. When you change the print settings from your software application, access the printer properties. See page 4.9

3. Click the **Extras** tab, and click **Edit** button in the **Overlay** section.

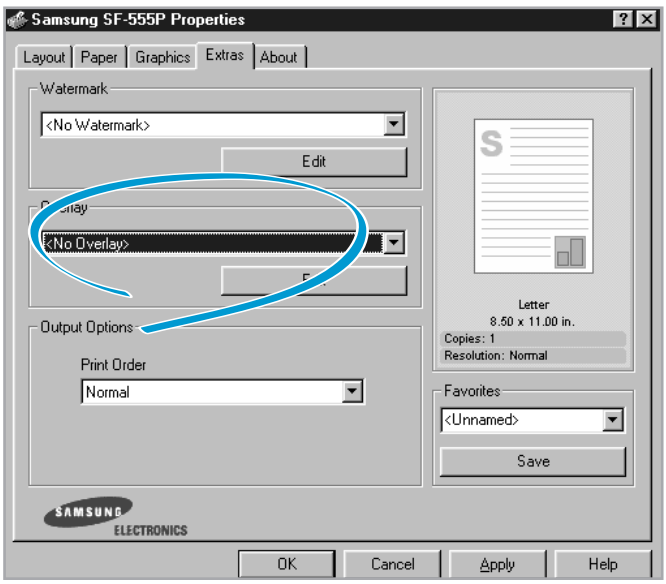

4. In the Edit Overlays window, click **Create Overlay**.

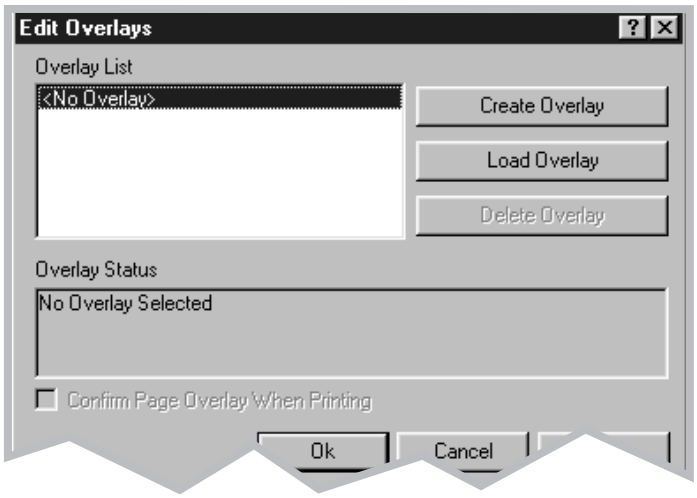

5. In the Create Overlay window, type a name of up to eight characters in the **File name** box. Select the destination path, if necessary. (The default is C:\Formover).

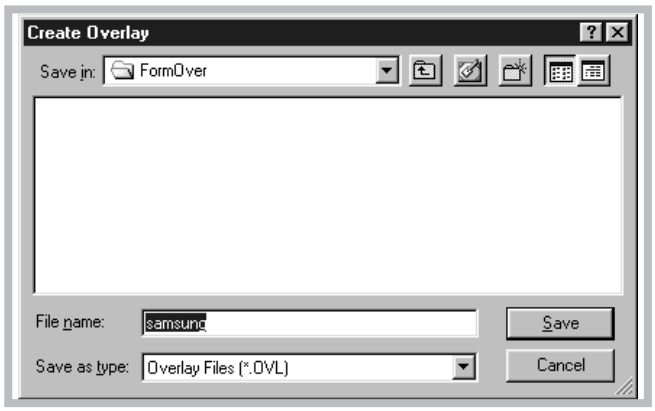

6. Click **Save**. You will see the name in **Overlay List**.

7. Click **OK** or **Yes** until you complete creating.

   The file is not printed out. Instead it will be stored on your computer HDD disk.

Note: The overlay document size must be the same as documents you will print with the overlay. Do not create an overlay with a watermark.

Using a Page Overlay

After an overlay has been created, it is ready to be printed with your document. To print an overlay with a document:

1. Create or open the document you want to print.

2. When you change the print settings from your software application, access the printer properties. See page 4.9

3. Click the **Extras** tab.

4. Select the desired overlay from the **Overlay** drop-down list box.

5. If the desired overlay file does not appear in the **Overlay** list, click the **Edit** button and **Load Overlay**, and select the overlay file.

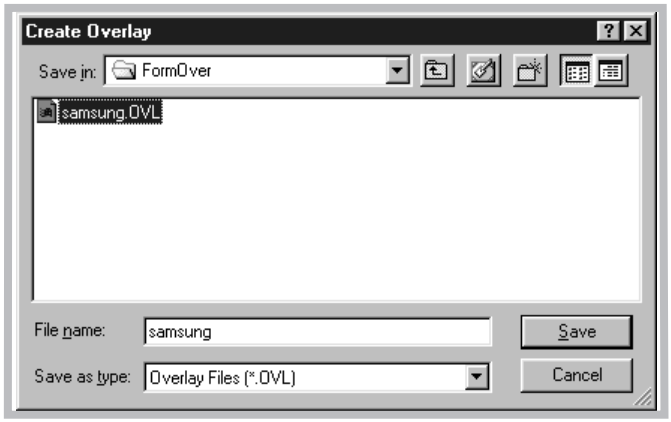

If you have stored the overlay file you want to use into an external source, you can also load the file when you access this Load Overlay window.
After you select the file, click Open. The file is now shown in the Overlay List box and is available for printing. Select the overlay from the Overlay List box.

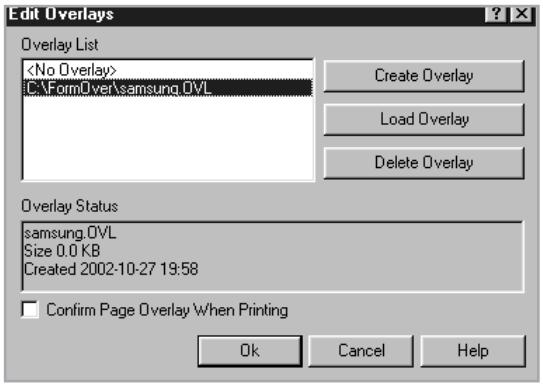

6. If necessary, click **Confirm Page Overlay When Printing**. If this box is checked, a message window will appear each time you submit a document for printing, asking you to confirm your wish to print an overlay on your document.

   Answering **Yes** to the window means that the selected overlay will be printed with your document. Answering **No** to the window cancels overlay printing.

   If this box is empty and an overlay has been selected, the overlay will be automatically printed with your document.

7. Click **OK** or **Yes** until the printing starts.

   The selected overlay will be downloaded with your print job and printed on your document.

Note: The resolution of the overlay document must be the same as that of the document you will print with the overlay.

Deleting a Page Overlay

You can delete page overlays that are no longer used.

1. In the printer properties window, click the **Extras** tab.
2. Click **Edit** in the **Overlay** section.
3. Select the **overlay** you want to delete from the Overlay **List** box.
4. Click **Delete Overlay.**
5. Click **OK** until you exit the Print window.

Setting Graphic Properties

Use the following graphic options to adjust the print quality for your specific printing needs. See page 4.9 for more information about accessing printer properties.

Click the **Graphics** tab to display the properties shown below.

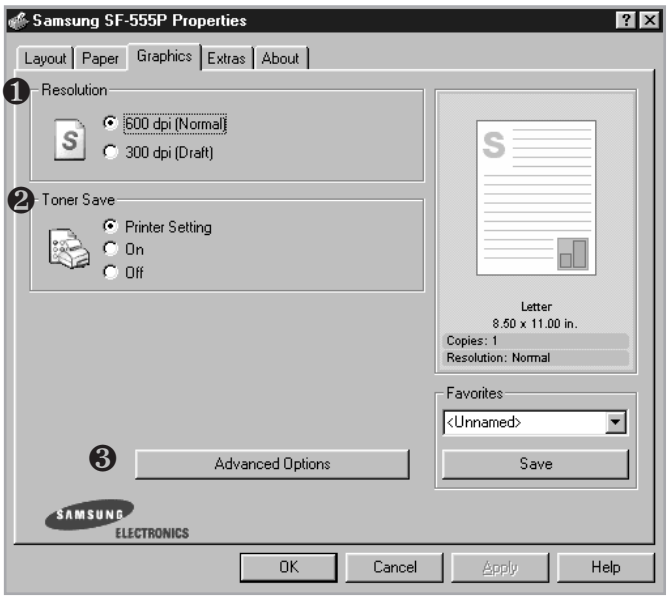

Property	Description
❶ Resolution	You can select the printing resolution by choosing from **600 dpi (Normal)** or **300 dpi (Draft)**. The higher the setting, the sharper the clarity of printed characters and graphics. Higher settings may increase time it takes to print a document.
❷ Toner Save	Selecting this option will extend the life of your toner cartridge and reduce your cost per page without a significant reduction in print quality. For detailed information about this mode, see page 4.15

Property	Description
❸ Advanced Options	You can set advanced settings by clicking the **Advanced Options** button. 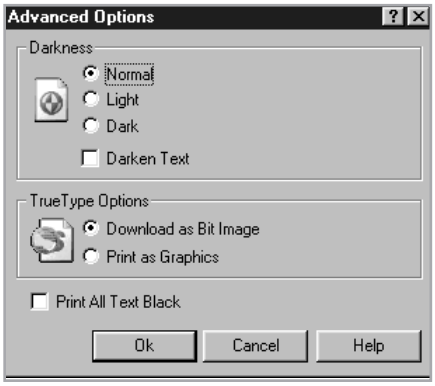 **Darkness** Use this option to lighten or darken the image appearance in your print. • **Normal**: This setting is for normal documents. • **Light**: This setting is for bolder line widths or darker gray-scale images. • **Dark**: This setting is for finer line width, higher definition in graphics, and lighter gray-scale images. When the **Darken Text** option is checked, all text in your document is allowed to print darker than a normal document.

Property	Description
❸ Advanced Options *(continued)*	**True Type Options** This option determines what the driver tells the machine about how to image the text in your document. Select the appropriate setting according to the status of your document. • **Download as Bit Image**: When this option is selected, the driver will download the font data as bitmap images. Documents with complicated fonts, such as Korean or Chinese, or various types of fonts will print faster in this setting. • **Print as Graphics**: When this option is selected, the driver will download any fonts as graphics. When printing documents with high graphic content and relatively few TrueType fonts, printing performance (speed) may be enhanced in this setting. **All Text Black** When the **All Text Black** is checked, all text in your document is allowed to print solid black, regardless of the color it appears on the screen. When it is not checked, colored text is allowed to print in shades of gray.

Using Output Options

You can use the options for output of your document.
See page 4.9 for more information about accessing printeproperties.
Click the **Extras** tab to access the **Output Options** feature.

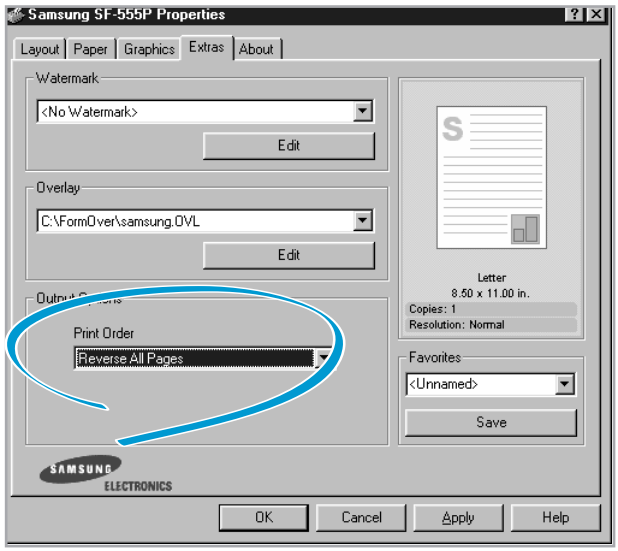

Property	Description
Print Order	You can set in what sequence the pages will be printed. Select the required print order from the drop-down list. **Normal**: Your machine prints in normal order. • **Reverse All Pages**: Your machine prints all pages in reversed order. This setting is helpful when you are using the rear output slot. • **Print Odd Pages**: Your machine prints only the odd pages of the document. • **Print Even Pages**: Your machine prints only the even pages of the document.

Setting Up the Locally Shared Printer

You can connect the machine directly to a selected computer, which is called "host computer," on the network. Your machine can be shared by other users on the network through a Windows 9x, Me, 2000, XP or NT 4.0 network printer connection.

In Windows 98/Me

Setting Up the Host Computer

1. Start Windows.

2. From the **Start** menu, select **Control Panel**, and double-click on the **Network** icon.

3.Check the **File and Print Sharing** box, and click **OK**.

4. Click **Start** and select **Printers** from **Settings**, and double-click your printer name.

5. Select **Properties** in the **Printer** menu.

6. Click the **Sharing** tab, and check the **Shared As** box. Fill in the Shared Name field, and then click OK.

Setting Up the Client Computer

1. Right-click **Start,** and select **Explorer**.

2. Open your network folder in the left column.

3. Right-click the shared name, and select **Capture Printer Port.**

4. Select the port you want, check the **Reconnect at log on** box, and then click **OK.**

5. From the **Start** menu, select **Settings** and **Printers.**

6. Double-click your printer icon.

7. From the **Printer** menu, select **Properties.**

8. Press the **Details** tab, select the printer port, and click **OK**.

In Windows NT 4.0/2000/XP

Setting Up the Host Computer

1. Start Windows.

2. For Windows NT 4.0/2000, from the **Start** menu, select **Settings** and **Printers.**

   For Windows XP, from the **Start** menu, select **Printers and Faxes.**

3. Double-click your printer icon.

4. From the **Printer** menu, select **Sharing.**

5. For Windows NT 4.0, check the **Shared** box.

   For Windows 2000, check the **Shared As** box.

   For Windows XP, check the **Share this printer** box.

6. For Windows NT 4.0, fill in the **Share Name** field and click **OK**

   For Windows 2000/XP, fill in the **Shared Name** field and click **OK**.

Setting Up the Client Computer

1. Right-click **Start**, and select **Explorer**.

2. Open your network folder in the left column.

3. Click the shared name.

4. For Windows NT 4.0/2000, select **Settings** and **Printers** from the Start menu.

   For Windows XP, select **Printers and Faxes** from the **Start** menu.

5. Double-click your printer icon.

6. From the **Printer** menu, select **Properties**.

7. Press the **Ports** tab, and click **Add Port**.

8. Select **Local Port**, and click **New Port**.

9. Fill in the **Enter a port name** field, and enter the shared name.

10. Click **OK**, and click **Close**.

11. For Windows NT 4.0, click **OK**.

    For Windows 2000/XP, click **Apply**, and click **OK**.

chapter 5

Maintenance

This chapter provides suggestions for high-quality and economical operating and information for maintaining the toner cartridge and the machine.

The topics included in this chapter are:

- Guidelines for Maintenance
- Clearing Memory
- Cleaning the OPC Drum
- Adjusting Shading
- Setting the Machine to be checked by Phone
- Sending Toner Low Information to the Service Company
- Cleaning the Machine
- Managing the Toner Cartridge
- Automatic Document Feeder Rubber Pad Replacement

Guidelines for Maintenance

For optimal performance of the SF-555P, follow these guidelines:

- Place the machine on a stable surface.
- Do not install your machine near devices that contain magnets or generate magnetic fields, such as speakers.
- Keep your machine clean. Dust accumulation can prevent the unit from operating properly.
- For your safety, unplug the power cord from the machine during electrical storms.
- Lift the machine from the bottom only. Do not lift the unit by the front panel or any of the trays.

Clearing Memory

You can selectively clear information stored in your machine's memory.

1. Press **Setup** on the control panel. The display shows the first menu; FAX NUMBER/NAME.

2. Press ◀ or ▶ until 'MEMORY CLEAR' appears, then press **Start/Enter**. The display shows the items you can clear.
   - **FAX NUMBER/NAME**: your fax number and name are cleared from the machine's memory.
   - **DIAL/SCHEDULE**: clears the one-touch, speed dial, or group dial numbers stored in the memory. In addition, all the Schedule Job operations you have reserved are also cancelled.
   - **JOURNAL**: clears all records of transmissions & receptions.
   - **DEFAULT SETUP**: restores all the option settings to factory default.

3. Press ◀ or ▶ until you find the item you want to clear, then press **Start/Enter**. The display asks you to confirm your selection.

4. Press **Start/Enter** to confirm. The selected memory is cleared, then the display asks you to continue clearing the next item.

5. Repeat steps 3 through 5 to clear another item.

   Or, to return to Standby mode, press **Stop**.

Cleaning the OPC Drum

If you are getting streaks or spots on your print, you may clean the OPC drum.

1. Make sure that the paper is loaded in the automatic input tray.

2. Press **Setup** on the control panel.
   The display shows the first setup menu; FAX NUMBER/NAME.

3. Press ◀ or ▶ until 'MAINTENANCE' appears, then press **Start/Enter**.

4. The display shows the first menu, 'CLEAN DRUM', then press **Start/Enter**.

   The machine automatically pulls in a sheet of paper, and prints it out. The toner particles on the OPC drum surface are fixed to the paper.

5. Press **Stop** to return to Standby mode.

Adjusting Shading

The scanning unit becomes dirty, it can alter the shading value. If your print has black lines or is blurred, adjust the shading setting. Take the following steps:

1. Load a sheet of white paper into the document feeder.

2. Press **Setup** on the front panel.
   The display shows the first setup menu; FAX NUMBER/NAME.

3. Press ◀ or ▶ until 'MAINTENANCE' appears,then press **Start/Enter**.
   The display shows the first menu; CLEAN DRUM.

4. Press ◀ or ▶ until you find 'ADJUST SHADING', then press **Start/Enter**.

   The white paper is scanned through the document feeder.

Setting the Machine to be Checked by Phone

The Remote Test feature allows your machine to be checked out by a service company at a remote place by phone.

1. Press **Setup** on the control panel.
   The display shows the first setup menu; FAX NUMBER/NAME.

2. Press ◀ or ▶ until 'MAINTENANCE' appears, then press **Start/Enter**.
   The display shows the first menu; CLEAN DRUM.

3. Press ◀ or ▶ until you find 'REMOTE TEST', then press **Start/Enter**.

4. Press ◀ or ▶ to turn this feature ON or OFF, then press **Start/Enter**.

   If you want to protect your machine from being opened by an unauthorized person, select OFF.

5. Press **Stop** to return to Standby mode.

Sending Toner Low Information to the Service Company

If you have set this Notify Toner Low menu option to ON, when the toner cartridge needs to be replaced, your machine automatically sends a fax to your service company or the dealer to notify them that your machine requires a new toner cartridge. This feature will be activated only when the phone number of the service company or the dealer is stored in your machine's memory by technician. Ask your dealer for more information.

1. Press **Setup** on the control panel.
   The display shows the first setup menu; FAX NUMBER/NAME.

2. Press ◀ or ▶ until 'MAINTENANCE' appears, then press **Start/Enter**.
   The display shows the first menu; CLEAN DRUM.

3. Press ◀ or ▶ until you find 'NOTIFY TONER LOW', then press **Start/Enter**.

4. Press ◀ or ▶ to turn this feature ON or OFF, then press **Start/Enter**.

5. Press **Stop** to return to Standby mode.

Cleaning the Machine

To maintain print quality, follow the cleaning procedures below every time the toner cartridge is replaced or whenever print quality problems occur. As much as possible, keep your machine free from dust and debris.

Note:
- Do not use ammonia-based sprays or volatile solvents such as thinner to clean the machine, as these can damage the machine's surface.
- While cleaning the inside of the machine, be careful no to touch the transfer roller (located underneath the toner cartridge). The oil from your hands on the roller can cause print quality problems.

Cleaning the Outside

Wipe the outside surfaces of your machine with a soft, clean, and lint-free cloth. You can dampen the cloth slightly with water, but be careful not to let any water drip onto the machine or inside it.

Cleaning the Inside

During the printing process, paper, toner, and dust particles can accumulate inside the machine. Over time, this buildup can cause print quality problems such as toner specks or smearing. Cleaning inside the printer will eliminate or reduce these problems.

1. Turn the machine off and unplug the power cord, then wait for the machine to be cool.

2. Pulling the cover release buttons toward you, open the cover and remove the toner cartridge.

   Note: To prevent damage to the toner cartridge, do not expose it to light for more than a few minute. Cover it with a piece of paper, if necessary.

3. With a dry, lint-free cloth, wipe away any dust and spiled toner from the toner cartridge area and the toner cartridge cavity.

Cleaning the Document Scanner

To keep your machine working properly, occasionally clean the white roller, ADF rubber, and the scanning glass.

Note: Do not turn the power off to clean the scanner, as documents stored in the memory will be lost.

1. Lift the front panel by grabbing the panel along the top edge and open the cover.

2. Disassemble the white roller as follows:
   Pull the handle of the bushing on the end of the roller slightly outward(A), rotate it until it reaches a slot(B), then pull the roller upward.

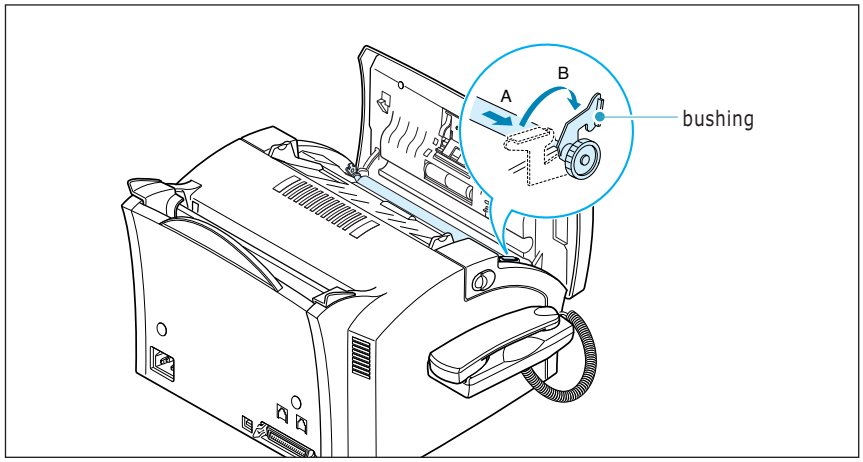

3. Wipe the roller surface with a soft cloth dampened with water.

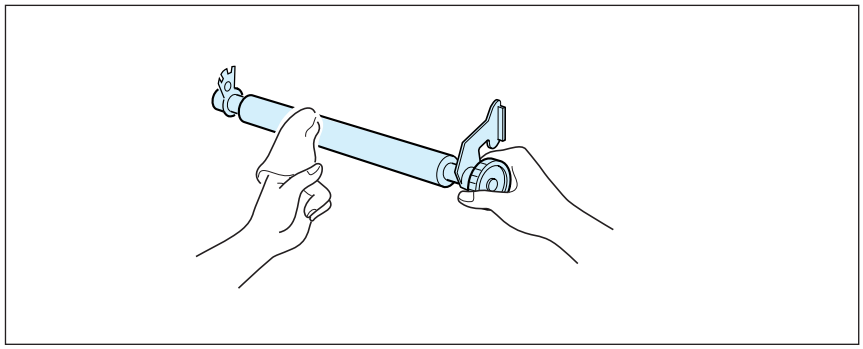

4. Clean the ADF rubber piece.

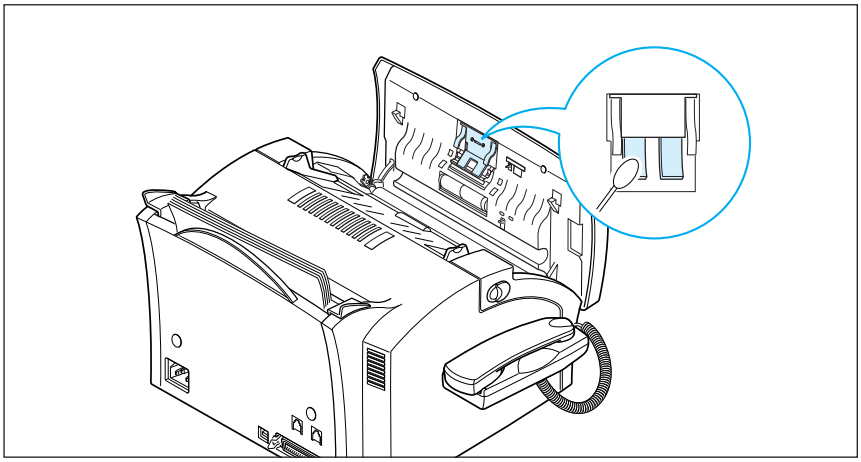

5. Carefully wipe the scanning glass with a soft, dry cloth.

   If the glass is very dirty, first wipe it with a slightly dampened cloth, then with a dry cloth. Be very careful not to scratch the glass surface.

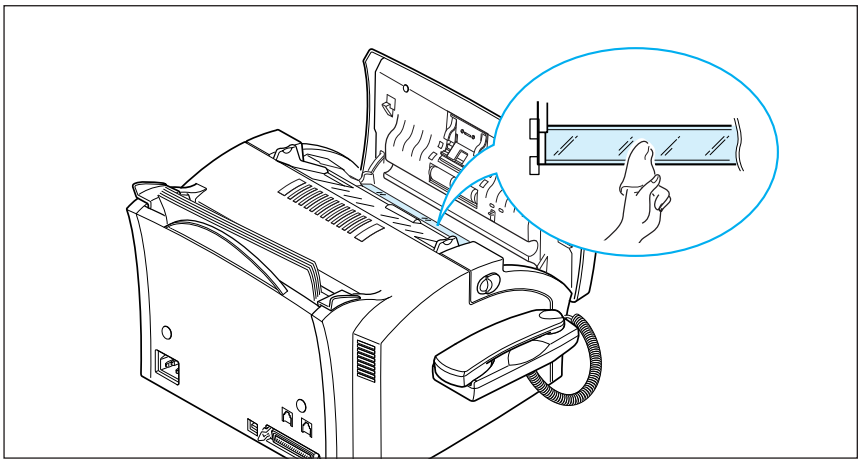

6. Replace the roller in reverse order, and then close the front panel firmly until it clicks into place.

Managing the Toner Cartridge

Expected Cartridge Life

The life of your toner cartridge depends on the amount of toner used in each print job. For instance, when you print a typical business letter with about 5% page coverage, you can expect a toner cartridge life of approximately 2,500 pages (1,000 pages only for the toner cartridge shipped with your machine). The actual number may vary according to the print density of the page you print. If you print a lot of graphics, you may need to change the cartridge more often.

You can extend the life of your toner cartridge by using Toner Save Mode on the printer properties (page 4.15) or on the front panel (page 1.22). The Toner Save Mode uses less toner than normal printing. The printed image is much lighter, and is adequate for printing drafts or proofs.

Redistributing the Toner Cartridge

When the toner cartridge is near the end of its life, white streaks or hue changes will occur. You can temporarily re-establish the print quality by re-distributing the remaining toner in the cartridge.

1. Open the cover and remove the toner cartridge.

2. Gently shake the cartridge to distribute the toner evenly inside the cartridge.

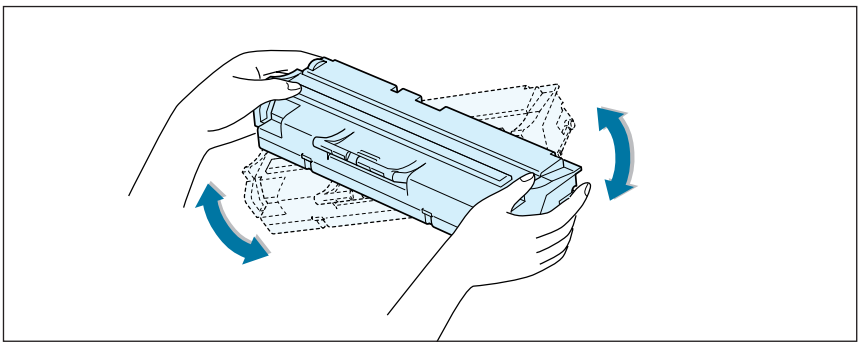

3. Reinstall the cartridge and close the cover.

This is typically successful one time only. When the toner eventually runs out, only blank pages will print when a print job is sent, or when a fax is received. At this stage, the toner cartridge needs to be replaced. See the following page.

Take the following steps to replace the toner cartridge:

1. Pulling the cover release buttons toward you, open the cover.

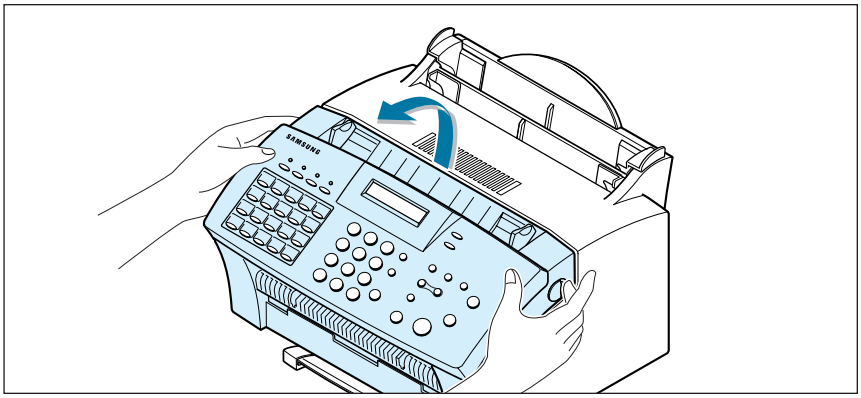

2. Remove the old toner cartridge. Follow the instructions printed on the cartridge box to recycle the used cartridge.

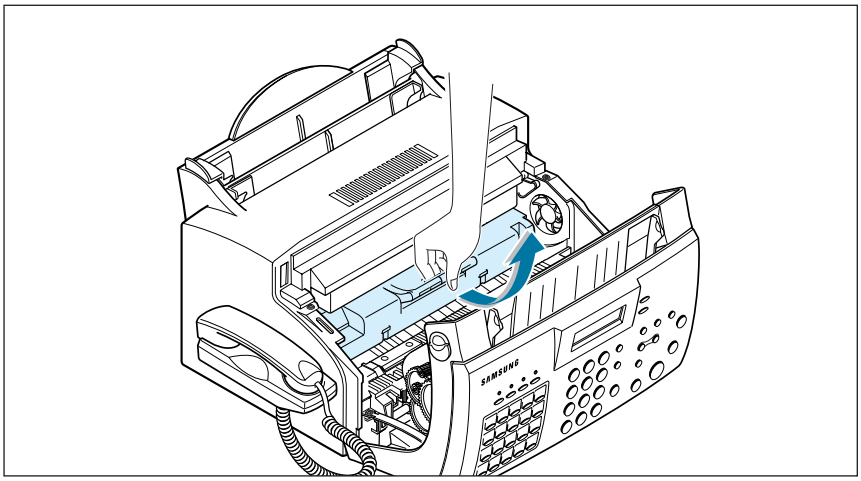

3. Unpack a new toner cartridge from its plastic bag, and then remove the paper rolled the cartridge.

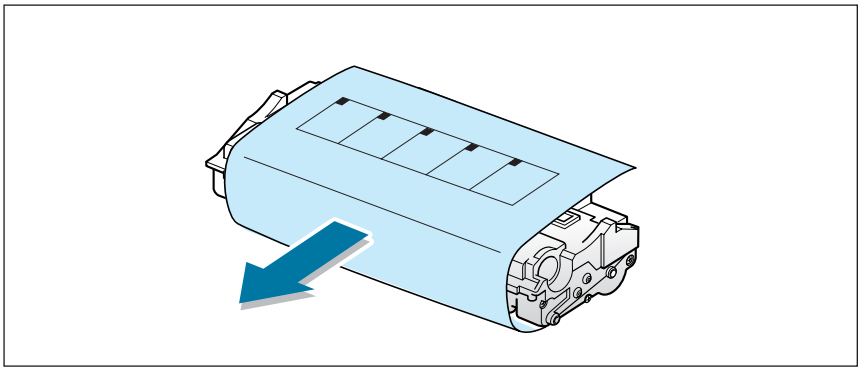

4. Shake the cartridge from side to side 5 or 6 times to distribute the toner evenly inside the cartridge.

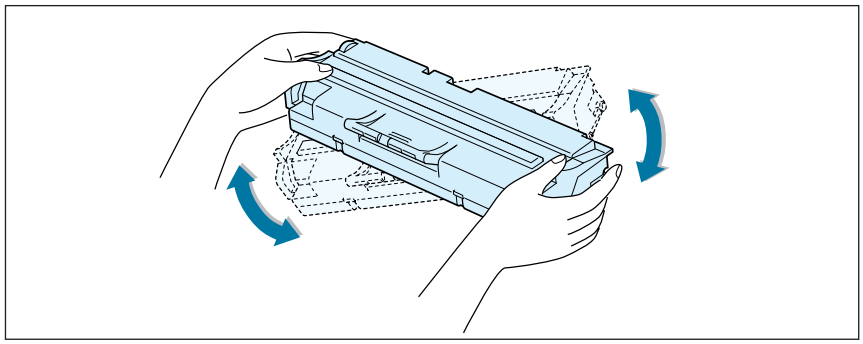

5. Find the cartridge slots inside the machine, one on each side. Grasp the handle and slide the cartridge down between the cartridge slots until it drops into place.

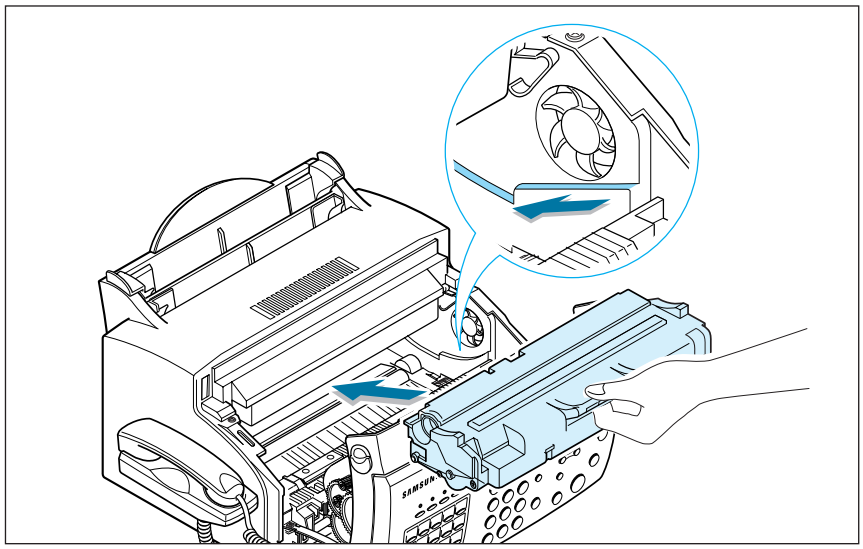

6. Close the cover firmly until it snaps closed.

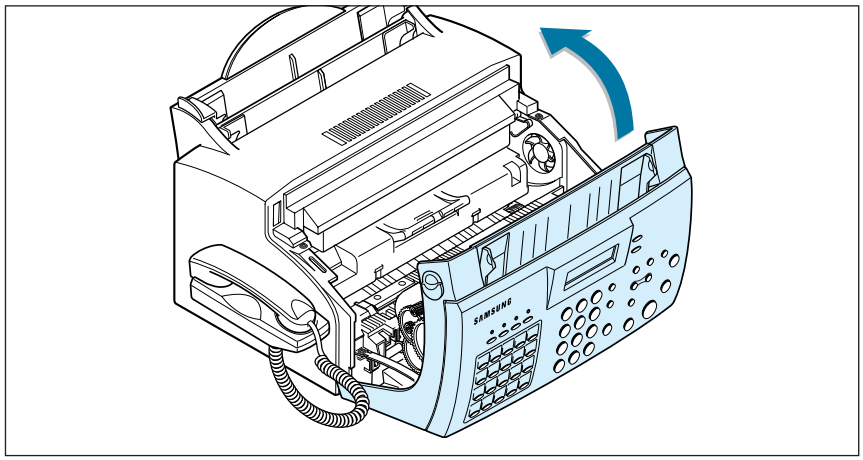

Automatic Document Feeder Rubber Pad Replacement

You can purchase the ADF rubber from an authorized service center

1. Open the Control Panel Cover.

2. Insert a small flat blade screwdriver under the right and left sides of the ADF Holder.

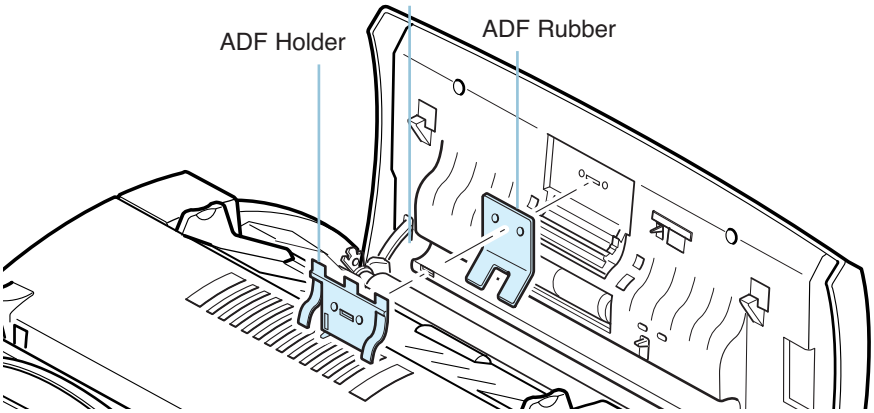

3. Apply upward pressure to release the two locking tabs on each side of the assembly.

4. Remove the assembly and replace the ADF Rubber.

5. Reassemble the components in the order shown in the diagram above.

6. Place the assembly back onto the ADF Holder.

7. Press down on the assembly until it locks into position.

8. Close the Control Panel.

chapter 6

Troubleshooting

This chapter gives helpful information for what to do if you encounter a operating error.

It provides information on the following topics:

- Clearing Paper Jams
- LCD Error Messages
- Fax Problems
- General Printing Problems
- Print Quality Problems

Clearing Paper Jams

Document Jams While Sending a Fax

If a document jams while you are sending it, 'DOCUMENT JAM' appears on the display. Do not pull the document out of the slot. If you do this, it could harm your machine.

1. Lift the front panel by grabbing the panel along the top edge.

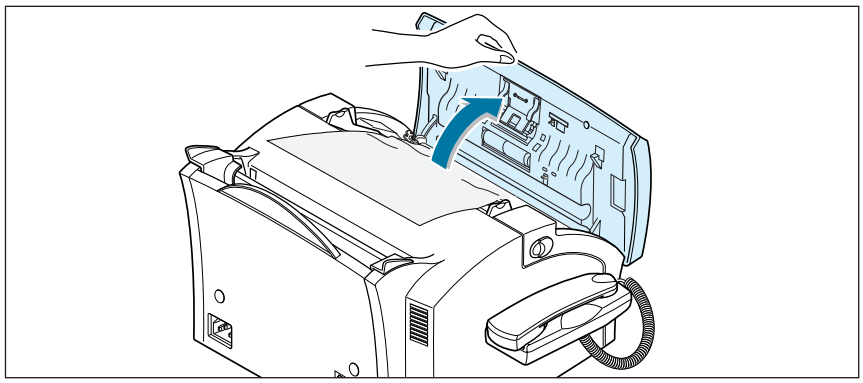

2. Carefully remove the jammed document.

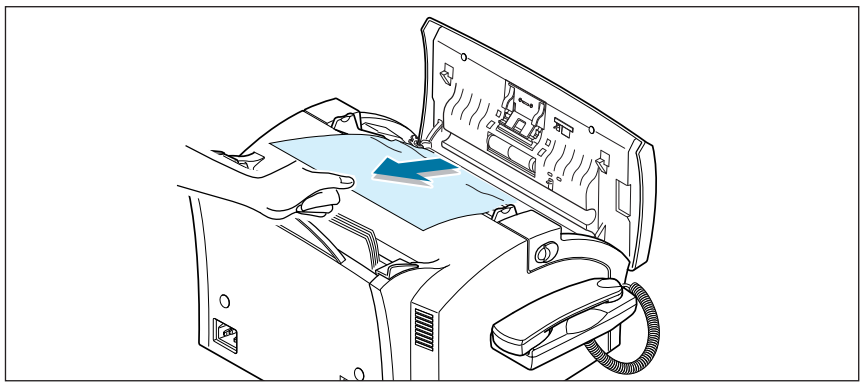

3. Close the front panel firmly until it clicks into place.

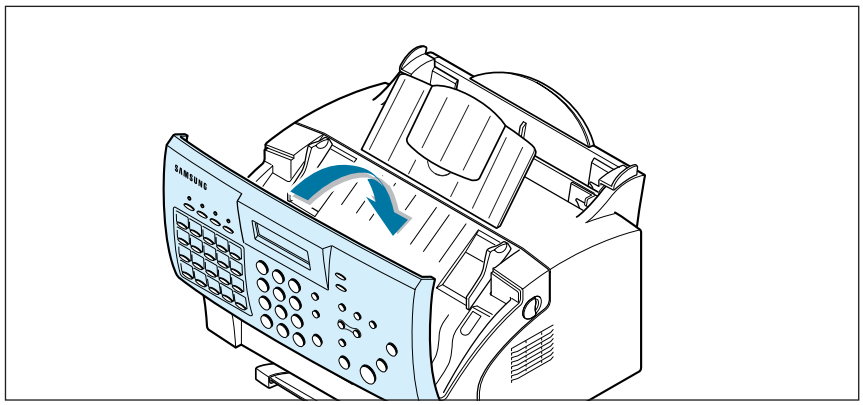

Paper Jams While the Machine is Printing

By carefully selecting the paper type and loading them properly, you should be able to avoid most paper jams. If paper jams occur, an error message appears on the display. Follow the steps below to clear the jam. To avoid tearing the paper, pull the jammed paper out gently and slowly.

IF JAMMED IN THE PAPER INPUT TRAY

1. Remove the jammed paper by carefully pulling it out of the tray.

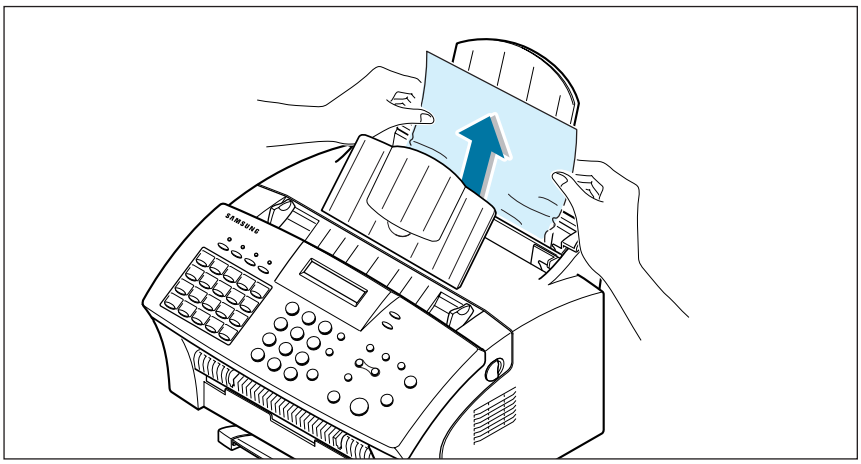

2. After you have removed the jammed paper, load the paper with the print side facing you.

IF JAMMED IN THE PAPER OUTPUT AREA

If the paper jams as it exits to the paper output tray and a long portion of the paper is visible, pull the paper straight out.

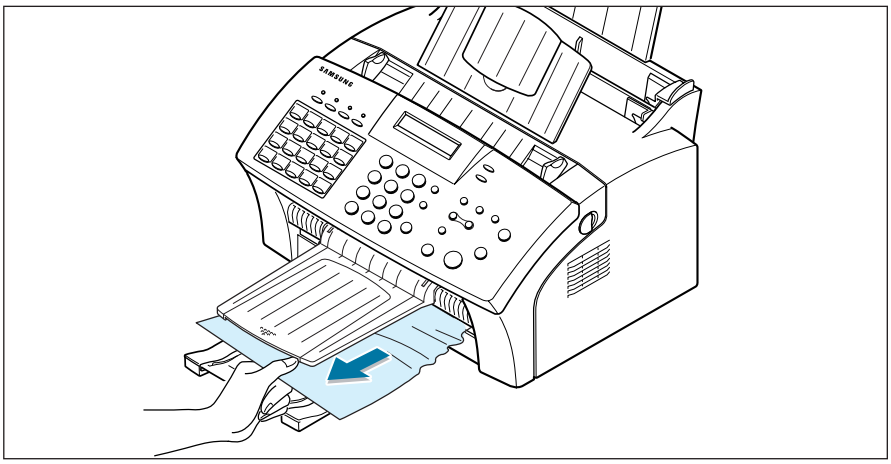

If there is any resistance, and the paper does not move immediately when you pull, stop pulling. Continue with the next step.

IF JAMMED INSIDE THE MACHINE

1. Pulling the cover release buttons toward you, open the cover.

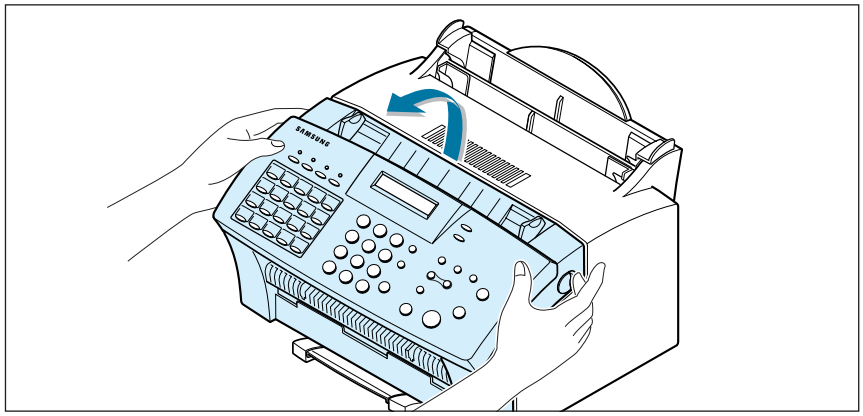

2. Remove the toner cartridge.

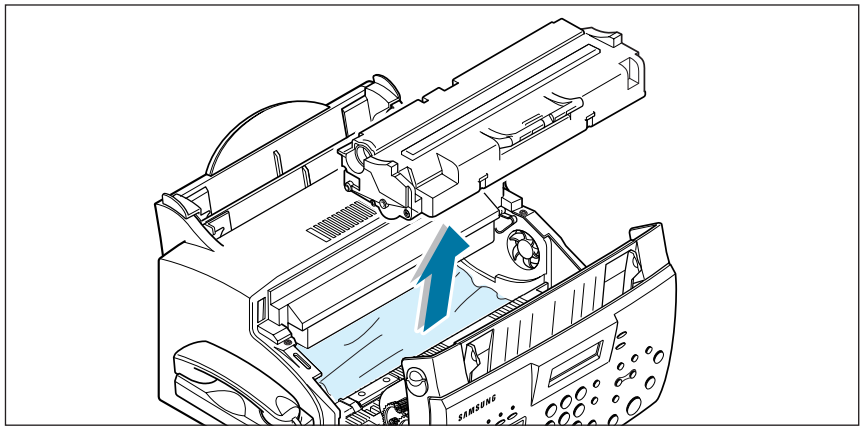

3. Remove the jammed paper by carefully pulling it out of the machine.

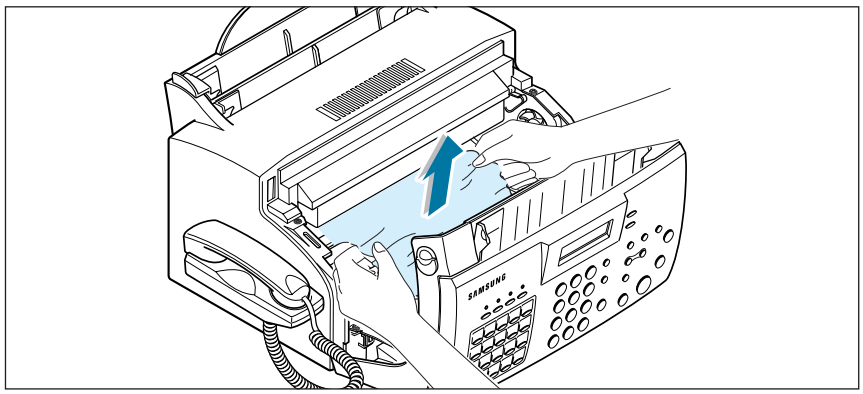

4. Check that there is no other paper inside the machine.

5. Replace the toner cartridge and close the cover.

Tips for Avoiding Paper Jams

By carefully selecting print materials and loading them properly, you should be able to avoid most paper jams. If jams do occur, follow the steps outlined in "Clearing Paper Jams" starting on page 6.1. If jams occur frequently, make sure that you are following these preventative tips:

- Follow the procedures in "Loading Paper" on page 1.15 to load paper properly. Make sure that the adjustable guides are positioned correctly.
- Do not overload the paper. Up to 150 sheets can be loaded in the automatic paper input tray at a time and the manual input tray holds only one sheet at a time.
- If you are needed to add more sheets of paper while printing, remove the remaining paper from the tray at first. Then, reinsert them with the new paper. Note that adding new paper into the remains in the tray may cause paper jams or multiple feeding.
- Envelopes with self-stick adhesives may cause wrinkling, creasing, or even jams and may even damage your machine.
- Fan stacks of labels or transparencies before loading them into the automatic paper input tray. If jams occur when using the paper input tray, try feeding one sheet at a time in the manual input tray.
- Do not load wrinkled, creased, damp, or highly curled paper.
- Do not mix paper sizes in the paper input tray.
- Use only recommended print media.
- Make sure that the recommended print side is facing up when loading it in the paper input tray.
- Keep print media stored in a suitable environment.

LCD Error Messages

Display	Meaning	Solution
DOCUMENT JAM	The loaded document has jammed in the feeder.	Clear the document jam.
DOOR OPEN	The front cover is not securely latched.	Press down on the cover until it clicks in place.
FUSER ERROR	There occurs a problem in the fuser unit.	Unplug the power code and plug it back in. If the problem still persists, please call for service.
JAM/NO CARTRIDGE	Recording paper has jammed inside the unit, or the toner cartridge is not installed.	Clear the jam, or install the cartridge
LINE ERROR	Your unit cannot connect with the remote machine, or has lost contact because of a problem on the phone line.	Try again. If failure persists, wait an hour or so for the line to clear, then try again. Or, turn the ECM mode on. See 'Setting User-Selectable System Options' on page 3.2.
LOAD DOCUMENT	You have attempted to set up a sending operation with no document loaded.	Load a document and try again.
LSU ERROR	A problem has occurred in the LSU (Laser Scanning Unit).	Unplug the power cord and plug it back in. If the problem still persists, please call for service.
MEMORY FULL	The memory is full.	Either delete unnecessary documents, or retransmit after more memory becomes available, or split the transmission into more than one operation.
NO ANSWER	The remote machine has not answered after all the redial attempts.	Try again. Make sure the remote machine is operational.
NO. NOT ASSIGNED	The one-touch or speed dial location you tried to use has no number assigned to it.	Dial the number manually with the keypad, or assign a number.

Display	Meaning	Solution
NO PAPER	The recording paper has run out.	Load the recording paper.
OVER HEAT	The printer part in your unit has overheated.	Please wait until it cools down. If you cannot solve the problem, please call for service.
PAPER JAM 0	Recording paper has jammed in the paper feeding area.	Press **Stop** and clear the jam. See page 6.1.
PAPER JAM 2	Jammed paper still remains inside the unit.	Clear the jam. See page 6.1.
POLLING ERROR	The remote fax machine you want to poll is not ready to respond to your poll. Or When setting up to poll another fax machine, you have used an incorrect poll code.	The remote operator should know in advance that you are polling and have their fax unit loaded with the original document. Enter the correct poll code.
POWER FAILURE	A power failure has occurred.	If documents have been stored in the memory, a 'Power Failure Report' will be automatically printed when the power is restored.
RECEIVE ERROR	A fax has not been received successfully.	A problem with the facsimile communications has occurred. Ask the sender to try again.
RETRY REDIAL ?	The machine is waiting for a specified time interval to redial a previously busy station.	You can press **Start/Enter** to immediately redial, or **Stop** to cancel the redial operation.
SEND ERROR	Your fax has not gone through successfully.	A problem with the facsimile communications has occurred. Try again.
TONER EMPTY	The toner cartridge has run out. The machine stops.	Replace with a new toner cartridge.
TONER LOW	The toner is almost empty.	Take out the toner cartridge and gently shake it. By doing this, you can temporarily re-establish printing operations.
WARMING UP	The printer is warming up and is off-line.	Wait until the machine is on-line.

Fax Problems

Symptom	Cause and Solution
The machine is not working, there is no display and the buttons are not working.	• Unplug the power cord and plug it in again. • Check that your socket is active.
No dial tone.	• Check that the phone line is connected properly. • Check that the phone socket in the wall by plugging in another phone.
The numbers stored in the memory do not dial correctly.	• Make sure that the numbers are stored in the memory correctly. • Print a Phonebook list. See page 3.38.
The document does not feed into the machine.	• Make sure that the document is not wrinkled and you are putting it in correctly. Check the document is the right size, not too thick or thin. • Make sure that the cover is firmly closed.
You cannot receive faxes automatically.	• The FAX mode should be selected. • Is there paper in the machine? • Check if the display shows 'MEMORY FULL.'
Your machine cannot receive faxes manually.	• Did you hang up the handset of the machine before you pressed **Start/Enter**?
Your machine will not send anything.	• Make sure that the document is loaded face down. • 'TX' should show up on the display. • Check the other machine you are sending to, to see if it can receive your fax.

Symptom	Cause and Solution
You cannot poll another machine.	• The fax machine you are polling may be using a poll code.
The incoming fax has blank spaces or you received a poor-quality copy.	• The machine sending you the fax may be faulty. • The fax machine sending you a fax may have a dirty scan glass. • A noisy phone line can cause line errors. • Check your machine by making a copy. • The toner cartridge may be empty.
Are some of the words on the incoming fax stretched?	• The machine sending you the fax had a temporary document jam.
There are lines on the copies or documents you send.	• Check your scan glass for marks, and clean it. See page 5.5.
The machine dials a number, but fails to make a connection with another fax machine.	• The other fax machine may be turned off, out of paper, or cannot answer incoming calls. Speak with the other machine operator and ask them to sort out the problem.
You cannot store a document in the memory.	• There may not be enough memory to store the document. If the display shows a 'MEMORY FULL' message, delete any documents you no longer need from the memory, then restore the document.
Blank areas appear at the bottom of each page or on other pages, with only a small strip of text printed at the top.	• You may have chosen the wrong paper settings in the user option setting. See page 3.3 to choose a proper paper size.

General Printing Problems

Problem	Possible Cause and Remedy
Your machine does not print.	• A paper jam has occurred. Remove the jammed paper. See page 6.1. • The toner cartridge is not installed properly. Remove and reinsert the toner cartridge. • The printer cable is not connected properly. Check the printer cable connection. • The printer cable is defective. Swap the cable with one known to work. • The port setting is incorrect. Check the Windows printer settings to make sure that the print job is being sent to the correct port (for example, LPT1). • The printer properties may be configured incorrectly. Check the application to make sure that all print settings are correct. • The printer driver may be incorrectly installed. Uninstall the MFP driver and reinstall the MFP driver. Then try printing a test page. Refer to 'Uninstalling SmarThru Software' on page 2.11.
The paper is not fed into the machine.	• Paper has not been inserted correctly. Remove and reinsert the paper correctly. See 'Using Automatic Paper Input Tray' on page 4.3 or 'Using Manual Paper Input Tray' on page 4.5. • There is too much paper in the paper input tray. Remove some of the paper from the input tray.
The paper keeps jamming.	• There is too much paper in the paper input tray. Remove some of the paper from the tray. (If printing onto envelopes or labels, insert them one at a time in the manual paper input tray.) • The paper setting method may be incorrect. If printing onto envelopes, insert the envelopes so that there is a gap of approximately 1 mm (1/32") between the left and right edge of the envelopes at the paper guide.

Problem	Possible Cause and Remedy
Half of the page is blank.	• The page layout is too complex. Simplify the page layout and remove any unnecessary graphics from the document if possible. • The page orientation setting may be incorrect. Change the page orientation in the Printer Properties dialogue box. • The paper size and the software paper size settings do not match. Insert the correct paper into the machine or change the software paper size settings. • Scaling may be set to less than 100%. Change the Scaling setting in the Printer Properties dialogue box. • The printer cable specifications may be incorrect. Use or replace the cable with an IEEE-1284 rated cable.
Your machine prints the wrong data, or it prints incorrect characters.	• The printer cable might not be connected properly. Check the printer cable connection. • There may be a problem with the printer driver software. Exit Windows and reboot the computer. Turn the printer off and then back on again. • The printer cable specifications may be incorrect. Use or replace the cable with an IEEE-1284 rated cable.
Printing is too slow.	• If using Windows 95/98/Me, the Spooling Setting may be set incorrectly. From the **Start** menu, select **Settings** and **Printers**. Click your printer icon with the right mouse button, select **Properties**, click the **Details** tab, and then click the **Spool Settings** button. Select the desired spool setting from the available choices. • If you are using Windows NT/2000/XP, the Scheduling setting may be set incorrectly. From the **Start** menu, select **Settings** and **Printers**. Click your printer icon with the right mouse button, select **Properties**, click the **Scheduling** tab. Then, select the desired scheduling setting from the available choices.
Scanner is busy receiving or printing data. When the current job is completed, tray again.	There may be a copying or printing job in progress. When the current job is completed, try the job again.

Print Quality Problems

Problem	Possible Cause and Remedy
Light or faded print 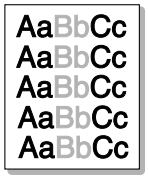 	If a vertical white streak or faded area appears on the page: • The toner supply is low. You may be able to temporarily extend the toner cartridge life. See "Redistributing the Toner" on page 5.7. If this does not improve the print quality, install a new toner cartridge. • The paper may not meet paper specifications (for example, the paper is too moist or too rough). See "Paper Type and Size" for faxing on page 1.17 and "Selecting Print Media" for PC printing on page 4.1. • If the whole page is light, Toner Save Mode may be on. Turn the Toner Save Mode option off on front panel or within the printer properties as your setting. See page 1.22 and 4.16 respectively. • A combination of faded and smeared defects may indicate that the toner cartridge needs cleaning. See "Cleaning the OPC Drum" on page 5.2. • The surface of scanner parts inside the machine may be dirty. See "Cleaning the Document Scanner" on page 5.5.
Toner specks 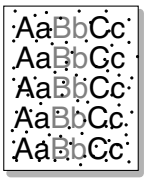 	• The paper may not meet paper specifications. See "Paper Type and Size" for faxing on page 1.17 and "Selecting Print Media" for PC printing on page 4.1. • The transfer roller area may be dirty. See "Cleaning the Inside" on page 5.4. • The paper path may need cleaning. See "Cleaning the Inside". • The surface of scanner parts may need cleaning. See "Cleaning the Document Scanner" on page 5.5.
Vertical lines 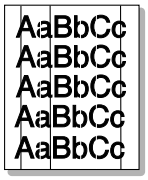 	If black vertical streaks appear on the page: • The photosensitive drum inside the toner cartridge has probably been scratched. Install a new toner cartridge.

Problem	Possible Cause and Remedy
Dropouts 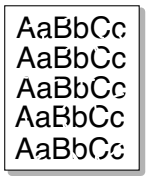 	If faded areas, generally rounded, occur randomly on the page: • A single sheet of paper may be defective. Try reprinting the job. • The moisture content of the paper is uneven or the paper has moist spots on its surface. Try a different kind or brand of paper. See "Paper Type and Size" for faxing on page 1.17 and "Selecting Print Media" for PC printing on page 4.1. • The paper lot is bad. The manufacturing processes can cause some areas to reject toner. Try a different kind or brand of paper. • The toner cartridge may be defective. See "Vertical repetitive defects" on page 6.13. • If these steps do not correct the problems, contact a service representative.
Gray background 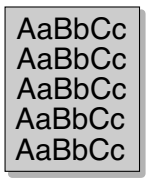 	If the amount of background toner shading becomes unacceptable, the procedures below may help to clear the condition: • Change the paper to a lighter basis weight. See "Paper Type and Size" for faxing on page 1.17 and "Selecting Print Media" for PC printing on page 4.1. • Check the printer's environment; very dry (low humidity) or high humidity (higher than 80 % RH) conditions can increase the amount of background shading. • Install a new toner cartridge. • Adjust the shading setting. See "Adjusting Shading" on page 5.2.
Toner smear 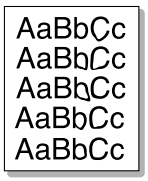 	• Clean the inside of the printer. See "Cleaning the Inside" on page 5.4. • Check the paper type and quality. See "Paper Type and Size" for faxing on page 1.17 and "Selecting Print Media" for PC printing on page 4.1. • Try installing a new toner cartridge.

Problem	Possible Cause and Remedy
Vertical repetitive defects 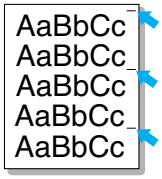	If marks repeatedly appear on the printed side of the page at even intervals: • The toner cartridge may be damaged. Print a cleaning sheet several times by cleaning the OPC drum (see page 5.2). After the printout, if you still have the same problems, install a new toner cartridge. • Parts in the machine may have toner on them. If the defects occur on the back of the page, the problem will likely correct itself after a few more pages. • The fusing assembly may be damaged. Contact a service representative.
Background scatter 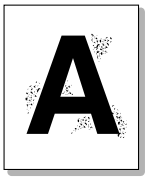	Background scatter results from bits of toner distributed on the printed page. • The paper may be too damp. Try printing with a different batch of paper. Do not open packages of paper until necessary so that the paper does not absorb too much moisture from the air. • If background scatter occurs on an envelope, change your printing layout to avoid printing over areas that have overlapping seams on the reverse side. Printing on seams can cause this problem. • If background scatter covers the entire surface of a printed page, adjust the print resolution through your software application or the printer properties.
Misformed characters 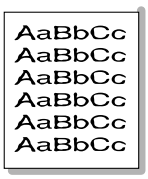	• If characters are improperly formed, producing hollow images, the paper stock may be too slick. Try a different paper. See "Paper Type and Size" for faxing on page 1.17 and "Selecting Print Media" for PC printing on page 4.1. • If characters are improperly formed, producing a wavy effect, the scanner unit may need service. Verify that it also occurs on a demo page. Press **Demo** (*) on the front panel when the machine is ready. If you need service, contact a service representative.

Problem	Possible Cause and Remedy
Page skew 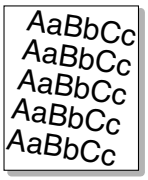	• Check the paper type and quality. See "Paper Type and Size" for faxing on page 1.17 and "Selecting Print Media" for PC printing on page 4.1. • Make sure that the paper or other media is loaded correctly and the guides are not too tight or too loose against the paper stack.
Curl or wave 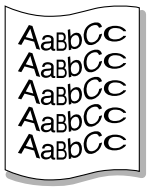	• Check the paper type and quality. Both high temperature and humidity will cause paper curl. See "Paper Type and Size" for faxing on page 1.17 and "Selecting Print Media" for PC printing on page 4.1. • Turn over the stack of paper in the input tray. Also try rotating the paper 180° in the input tray.
Wrinkles or creases 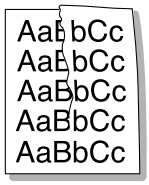	• Make sure that paper is loaded properly. • Check the paper type and quality. See "Paper Type and Size" for faxing on page 1.17 and "Selecting Print Media" for PC printing on page 4.1. • Turn over the stack of paper in the input tray. Also try rotating the paper 180° in the tray.
Back of printouts dirty 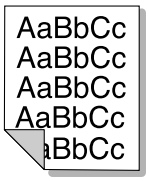	• The transfer roller area may be dirty. See "Cleaning the Inside" on page 5.4. • Check if the toner is leaking. Clean inside the machine. See page 5.4.
Black pages 	• The toner cartridge may not be installed properly. Remove the cartridge and reinsert it. • The toner cartridge may be defective and need replacing. Install a new toner cartridge. • The printer may require repairs. Contact a service representative.

Problem	Possible Cause and Remedy
Loose toner 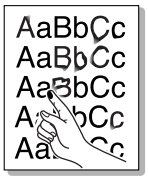 	• Clean the inside of the printer. • Check the paper type and quality. See "Paper Type and Size" for faxing on page 1.17 and "Selecting Print Media" for PC printing on page 4.1. • Try installing a new toner cartridge. • If the problem persists, the printer may require repairs. Contact a service representative.
Character Voids 	Character voids are white areas within the parts of characters that should be solid black: • If you are using transparencies when you experience this problem, try another type of transparency. (Because of the composition of transparency media, some character voids are normal.) • You may be printing on the wrong surface on the paper. Remove the paper and turn it around. • The paper may not meet paper specifications. See "Paper Type and Size" for faxing on page 1.17 and "Selecting Print Media" for PC printing on page 4.1.
Horizontal stripes 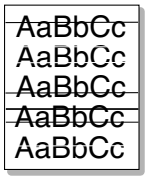 	If horizontally aligned black streaks or smears appear: • The toner cartridge may be installed improperly. Remove the cartridge and reinsert it. • The toner cartridge may be defective. Install a new toner cartridge. • If the problem persists, the printer may require repairs. Contact a service representative.

Appendix

- **Connecting Other Devices to the Phone Line**
- **Specifications**
  - General
  - Printer
  - Scanner
  - Copy
  - Fax
- **Safety Information**

Connecting Other Devices to the Phone Line

You can connect other devices to the same phone line as the SF-555P product.

Deciding What to Connect

You have connected the SF-555P to the wall jack. Generally, there are three other devices that can be connected to the same phone line:

- a telephone
- an answering machine
- an external modem or a computer with an internal modem

Which, of these you connect to this phone line depends on your configuration. Please see the following configurations.

Situation 1

You connected the SF-555P to a wall jack with a phone line for fax calls only (a dedicated fax line).

You do not need to connect any other devices. However:

- You can connect an external modem or a computer with an internal modem to this phone line if you want to use the fax line to access the Internet or e-mail.
- You can connect an extra telephone to this wall jack if you would like to make outgoing voice calls.

To connect any of these devices to the same phone line, go to "Connecting Other Devices, Overview" on page A.3. If you have another wall jack for this phone line, you can connect the extra phone and/or external modem or computer with internal modem to the other wall jack.

Note: Because this is a dedicated fax line, you should never have an answering machine or computer connected. Or, using computer voicemail, you must connect the computer with internal modem or the external modem to your dedicated voice line. You will connect to the Internet or e-mail using the dedicated voice line.

Situation 2

You connected the SF-555P to a wall jack with a phone line for fax and voice calls (a shared line).

Connect any other devices you have to this phone line. To connect the other devices you have to the same wall jack as the product, go to Appendix "Connecting Other Devices, Overview" on page A.3.

If you have another wall jack for this phone line, you can connect some of the devices to that wall jack. However, if you have an answering machine or computer with voicemail, make sure to connect it to the same wall jack as the SF-555P

Special Situations

You have two phone lines coming into one wall jack.

When you connected the SF-555P, you should have plugged it into a phone unit splitter connected to the wall jack. Proceed as if that side of the phone unit splitter is a phone line for fax calls only (a dedicated line). See "Situation 1" on page A.1.

You have one phone line with two phone numbers and distinctive ring service.

Use the same guidelines in "Situation 2" above for connecting other devices. You can change settings for distinctive ring later.

Connecting Other Devices, Overview

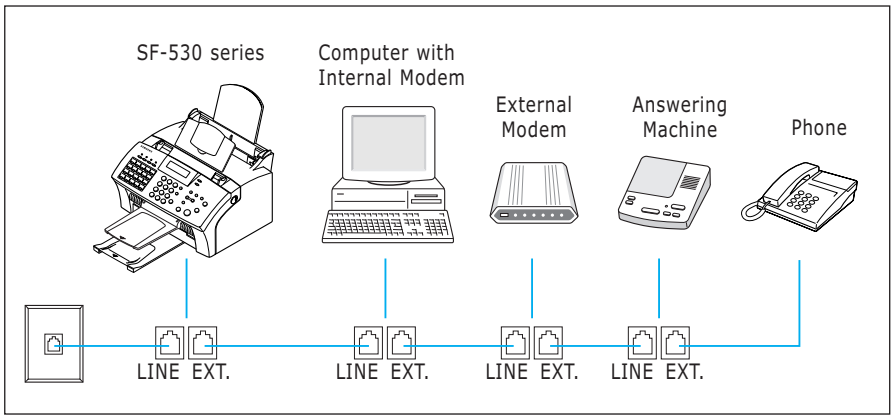

Connect other device in the order indicated.

Note:

- The SF-555P the device connected to the wall jack. If it isn't, it cannot answer incoming fax calls.
- As the drawing indicates, always plug the **LINE** jack into one device and the **EXT.** jack into another device.
- Some computers have a second **LINE** jack which is used to connect the computer to a dedicated voice line. If you have a second **LINE** jack, check your computer's documentation to ensure you are connecting to the correct **LINE** jack.

Specifications

General

Item	Specification and Description
Size (W x D x H) mm	370 x 356 x 195 mm
Weight (with accessories)	7.7 Kg
Interface	Parallel: IEEE 1284(ECP Only), USB: 1.1 compliant

Printer

Item	Specification and Description
Technology	Laser Beam
Paper Path-Recording	Rear to Front
Paper Path-Document	Rear to Front
Speed	12 ppm mono, 5% IDC Coverage in draft mode
Resolution	600 x 600 dpi
Effective Printing Width	202 mm
Manual Feed	Rear to Front
O/S	Windows 95/98/Me/NT Windows2000/XP
Emulation	Samsung PrinThru

Copy

Item	Specification and Description
Resolution	300 x 300 dpi
BW Contrast Control	Normal, Darken, Lighten, Photo
Multiple Copy	99 pages
Reduce & Enlarge	50 ~ 200 %

Scanner

Item	Specification and Description
Scan Method	Contact Image Sensor (CIS)
Scan Width	Max. 216 mm, Effective: 210 mm
Scan Resolution-Optical	300 x 300 dpi
Scan(Copy) Speed	SF-531P: 6 sec/page
Feeding Method	Sheet-fed
ADF Capacity	Max 20 sheets
BW Contrast Control	Normal, Darken, Lighten, Photo

Fax

Item	Specification and Description
Modem Speed	33.6 kbps
Compatibility	ITU-T Group 3
Resolution (Selectable by 1-key & LCD)	Standard: 200 x 100 dpi (Default) Fine: 200 x 200 dpi SuperFine: 300 x 300 dpi
Compression	MH/MR/MMR
ECM Support	Yes
Halftone	Photo: 64 grayscales
TAD Interface	Yes
Memory	2 MB
Memory Backup	30 Min.
Receive Mode	TEL, FAX, AUTO, ANS/FAX

Safety Information

Important Precautions and Safety Information

When using this fax machine, these basic safety precautions should always be followed to reduce risk of fire, electric shock, and injury to persons:

1. Read and understand all instructions.
2. Use common sense whenever operating electrical appliances.
3. Follow all warnings and instructions marked on the product and in the literature accompanying the product.
4. If an operating instruction appears to conflict with safety information, heed the safety information. You may have misunderstood the operating instruction. If you cannot resolve the conflict, contact your sales or service representative for assistance.
5. Unplug the fax machine from the AC wall socket and/or telephone jack before cleaning. Do not use liquid or aerosol cleaners. Use only a damp cloth for cleaning.
6. Do not place the fax machine on an unstable cart, stand, or table. It may fall, causing serious damage.
7. Your fax machine should never be placed on, near, or over a radiator, heater, air conditioner, or ventilation duct.
8. Do not allow anything to rest on the power, telephone. Do not locate your fax machine where the cords will be abused by persons walking on them.
9. Do not overload wall outlets and extension cords. This can diminish performance, and may result in the risk of fire or electric shock.
10. Do not allow pets to chew on the AC power, telephone, or PC interface cords.
11. Never push objects of any kind into the fax machine through case or cabinet openings. They may touch dangerous voltage points, creating a risk of fire or shock. Never spill liquid of any kind onto or into the fax machine.

12. Your product may have a heavy cover for optimal pressure on the document for the best scanning and/or faxing (usually the flatbed-type product). In this case, replace the cover after placing document on the scan glass, by holding and moving it down slowly until it seats on its location.

13. To reduce the risk of electric shock, do not disassemble the fax machine. Take it to aqualified service technician when repair work is required. Opening or removing covers may expose you to dangerous voltages or other risks. Incorrect reassembly could cause electric shock when the unit is subsequently used.

14. Unplug the machine from the telephone jack, PC, and AC wall outlet, and refer servicing to qualified service personnel under the following conditions:
    - When any part of the power cord, plug, or connecting cable is damaged or frayed.
    - If liquid has been spilled into the product.
    - If the product has been exposed to rain or water.
    - If the product does not operate properly after instructions have been followed.
    - If the product has been dropped, or the cabinet appears damaged.
    - If the product exhibits a sudden and distinct change in performance.

15. Adjust only those controls covered by the operating instructions. Improper adjustment of other controls may result in damage, and may require extensive work by a qualified service technician to restore the product to normal operation.

16. Avoid using this fax machine during a lightning storm. There may be a remote risk of electric shock from lightning. If possible, unplug the AC power and telephone for the duration of the lightning storm.

17. SAVE THESE INSTRUCTIONS.

In Case of Interference

In normal operation, your SAMSUNG fax machine produces and uses radio-frequency energy. In some cases, this can cause interference to other electronic equipment. Part 15 of the FCC rules establishes guidelines limiting the amount of radio-frequency energy which may be produced by electronic equipment. Tests have proven that your Samsung FAX machine meets or exceeds these guidelines, and is classified a "Class B Digital Device" for operation in a residential environment. When installed and operated according to instructions, your SAMSUNG fax machine should not cause interference to the types of equipment expected to be found in a normal residential environment.

Unauthorized changes or modifications could void the user's authority to operate the equipment.

In the event your SAMSUNG fax machine appears to cause interference to other electronic equipment, it can often be easily remedied. First determine if the source of interference really is your FAX machine. To do this, turn its power off and on while observing the equipment experiencing the interference. If the interference disappears when you turn the FAX machine off, the following steps can be very effective in correcting interference problems:

- Connect the FAX machine to an AC outlet which is on a different circuit breaker from the equipment experiencing interference.
- Increase the distance between the FAX machine and the equipment experiencing interference.
- Cable TV amplifiers and splitters are extremely prone to interference. Be certain that they are as far as possible from the FAX machine and its AC power and telephone cords.
- Replace "twin lead" antenna wire with shielded coaxial cable, and use proper connectors and adaptors.
- Turn or relocate the receiving antenna. In most cases this is easily done by sim-ply moving a radio. A TV antenna may need to be re-oriented or installed in another area of the building.
- Consult your dealer, a reputable radio/TV technician, or an Amateur Radio Operator for help.

* To locate an Amateur Radio Operator in your area, contact The American Radio Relay League, 610 Main St., Newington, CT 06111.

Fax Branding

The Telephone Consumer Protection Act of 1991 makes it unlawful for any person to use a computer or other electronic device to send any message via a telephone facsimile machine unless such message clearly contains in a margin at the top or bottom of each transmitted page
or on the first page of the transmission the following information:

(1) the date and time of transmission
(2) identification of either business, business entity or individual sending the message; and
(3) telephone number of either the sending machine, business, business entity or individual.

See pages 1.22 to 1.23 for instructions on how to enter this information into your Samsung FAX machine's memory.

The Telephone Company may make changes in its communications facilities, equipment operations, or procedures where such action is reasonably required in the operation of its business and is not inconsistent with the rules and regulations in FCC Part 68. If such changes can be reasonably expected to render any customer terminal equipment incompatible with telephone company communications facilities, or require modification or alteration of such terminal equipment, or otherwise materially affect its use or performance, the customer shall be given adequate notice in writing, to allow the customer an opportunity to maintain uninterrupted service.

Telephone Company Information

FCC IDENTIFICATION NUMBER

The Ringer Equivalence Number and FCC Registration Number for this equipment may be found on the label located on the bottom or rear of the machine. In some instances you may need to provide these numbers to the telephone company.

RINGER EQUIVALENCE NUMBER

The Ringer Equivalence Number (REN) is a measure of the electrical load placed on the telephone line, and is useful for determining whether you have "overloaded" the line. Installing several types of equipment on the same telephone line may result in problems making and receiving telephone calls, especially ringing when your line is called. The sum of all Ringer Equivalence Numbers of the equipment on your telephone line should be less than five in order to assure proper service from the telephone company. In some cases, a sum of five may not be usable on your line. If any of your telephone equipment is not operating properly, you should immediately remove it from your telephone line, as it may cause harm to the telephone network.

WARNING:
FCC Regulations state that changes or modifications to this equipment not expressly approved by the manufacturer could void the user's authority to operate this equipment. In the event that terminal equipment causes harm to the telephone network, the telephone company should notify the customer that service may be stopped. However, where prior notice is impractical, the company may temporarily cease service, providing that they:

a) Promptly notify the customer.
b) Give the customer an opportunity to correct the equipment problem.
c) Inform the customer of the right to bring a complaint to the Federal Communication Commission pursuant to procedures set out in FCC Rules and Regulations Subpart E of Part 68.

You should also know that:
- Your Samsung FAX machine is not designed to be connected to a digital PBX system.
- If you intend to use a computer modem or fax modem on the same phone line as your FAX machine, you may experience transmission and reception problems with all the equipment. It is recommended that no other equipment, except for a regular telephone, share the line with your FAX machine.
- If your area experiences a high incidence of lightning or power surges, we recommend that you install surge protectors for both the power and the telephone lines. Surge protectors can be purchased from your dealer or telephone and electronic specialty stores.
- When programming emergency numbers and/or making test calls to emergency numbers, use a non-emergency number to advise the emergency service dispatcher of your intentions. The dispatcher will give you further instructions on how to actually test the emergency number.
- This equipment may not be used on coin service or party lines.
- This telephone provides magnetic coupling to hearing aids.
- You may safely connect this equipment to the telephone network by means of a standard modular jack, USOC RJ-11C.

Memo

Index

A

adding documents 3.34
address label, using 3.23
adjusting shading 5.2
alert tone, setting 3.2
automatic dial
  one-touch dial 3.21
  speed dial 3.23
  using remote control panel 3.25
automatic input tray
  loading paper 1.15, 4.3
  paper source setting 4.10

B

broadcasting transmission 3.28

C

cancel
  print job 4.12
  scheduled operation 3.34
cleaning
  document scanner 5.5
  machine 5.4
  OPC drum 5.2
connecting
  other devices A.1
  parallel cable 1.14
  phone line 1.12
  power cord 1.15
  USB cable 2.8
contents 1.3
copying
  using advanced features 3.18
  overview 3.17
  single copying 3.17

D

date and time, setting 1.20
delayed transmission 3.29
document contrast, setting 3.8
document feeder, loading 3.9
document resolution, setting 3.8
document scanner, cleaning 5.5
driver,
  access 4.9
  install 2.4

E

entering, name 3.19
error messages 6.5

F

fax problem, solving 6.7
fitting document to selected paper 4.19
forwarding received faxes 3.36
front panel, features 1.6

G

group dialing 3.40

H

handset, inserting 1.11

I

install
  printer software 2.4
  toner cartridge 1.18
introduction
  SF-555P 1.1
  SmarThru software 2.1

L

load, document 3.9
load, paper
  in the automatic input tray 1.15, 4.3
  in the manual input tray 4.5
location, choosing 1.9

M

manual input tray
  loading paper 4.5
  paper source setting 4.10
memory
  clearing 5.1
  searching 3.27
monitoring status 3.35
multiple pages on one sheet, print 4.17

N

network, setting 4.31
notifying toner low 5.3
number and name, setting 1.21

O

one-touch dialing 3.21
one-touch label plate 3.23
OPC drum, cleaning 5.2
orientation 4.10
overlay, using 4.24

P

paper
  in automatic input tray 1.15, 4.3
  in the manual input tray 4.5
  selecting 1.17, 4.1
  setting 3.3, 4.10
paper jam, clear 6.8
  document 6.1
  inside the machine 6.3
  output area 6.2
  paper input tray 6.2
  tips avoiding paper jams 6.4
paper orientation, setting 4.10
paper save mode 1.23
paper size, setting 4.10
paper source, setting 4.10
paper type, setting 4.10
parallel, connection 1.14
parts, identifying 1.4
pause, inserting 3.21
phone line, connection 1.12
polling
  reception 3.33
  transmission 3.32
poster, printing 4.20
power, plugging 1.15
power save mode 1.22
print media see *paper*
print quality problem, solving 6.11
print quality, setting 4.28
print resolution 4.28
printer driver see *driver*
printer software, install 2.4
printing problem, solving 6.9
printing
  cancel 4.12
  cleaning page 5.2
  document 4.9
  general problems, solving 6.9
  help 4.12
in network environment 4.31
  several pages per sheet 4.17
  quality problems, solving 6.11
  reports 3.38

P *(continued)*

priority transmission 3.31
problem, solving
  error messages 6.5
  fax 6.7
  general printing 6.9
  paper jam 6.1
  print quality 6.11
  print Reduced.Enlarged 4.18

Q

quality, problems 6.11

R

receiving fax
  by an extension telephone 3.16
  in ANS/FAX mode 3.15
  in AUTO mode 3.15
  in DRPD mode 3.6
  in FAX mode 3.14
  in TEL mode 3.16
reception mode 3.13
redialling
  automatic 3.10
  last number 3.11
Redistrubuting, toner cartridge 5.8
remote test 5.3
reports, printing 3.38

S

searching, memory 3.27
send
  fax 3.10
  flash 3.35
setting
  alert tones 3.2
  date and time 1.20
  fax number and name 1.21
  resolution and contrast 3.8
  volume 3.1
  stand-alone fax system 3.2
specifications A.4
speed dialing 3.23
storing
  group dial 3.40
  one-touch 3.21
  speed dial 3.23
supports, attaching 1.10
system options, 3.2
system requirements, for software 2.3

T

tape, removing 1.9
toll save transmission 3.37
toner cartridge
  installing 1.18
  replacing 5.7
toner save mode 1.22, 4.15
troubleshooting see *problem, solving*

U

uninstall,
  MFP driver 2.10
  SmarThru software 2.11
  using CD-ROM 2.13
USB port, connection 2.8
user-selectable options 3.3

V

voice request 3.12
volume, setting 3.1

W

watermarks, printing 4.21