SAMSUNG

User's Guide

Digital Laser MFP

SF-560 Series

For UK customers:

To reorder your consumables
Call 0800 3164060

For Technical Assistance
Call 0870 2420303

About the User's Guides

Your machine comes with the two user's guides:

This Laser MFP User's Guide provides information you need for setting up your machine and installing the supplied software. It also provides all of the detailed instructions for using your machine as a printer, a scanner, a copier and a facsimile and information for maintaining and troubleshooting the machine.

The SmarThru 3 User's Guide provides the basic description about using the multi-function application. Samsung SmarThru allows you to scan and edit images, and to scan for copying, faxing and sending an e-mail on your computer. You can also find a brief description on the automatic text recognition program, AnyPage.

This manual is provided for information purposes only. All information included herein is subject to change without notice. Samsung Electronics is not responsible for any changes, direct or indirect, arising from or related to use of this manual.

© 2003 Samsung Electronics Co., Ltd. All rights reserved.

- SF-565P and Samsung logo are trademarks of Samsung Electronics Co., Ltd.
- PCL and PCL 6 are trademarks of hewlett-packard Company.
- Centronics is a trademark of Centronics Data Computer Corporation.
- IBM and IBM PC are trademarks of International Business Machines Corporation.
- Microsoft, Windows, Windows 9x, Window Me, Windows 2000, Windows NT 4.0 and Windows XP are registered trademarks of Microsoft Corporation.
- Apple, AppleTalk, TrueType, LaserWriter and Macintosh are trademarks of Apple Computer, Inc.
- All other brand or product names are trademarks of their respective companies or organizations.

CONTENTS

Chapter 1: GETTING STARTED

Unpacking 1.2
Selecting a Location 1.4
Understanding the Component Location 1.5
Front View 1.5
Rear View 1.5
Control Panel Functions 1.6
Attaching Accessories 1.8
Document Output Support 1.8
Handset and Handset Cradle 1.8
Installing the Toner Cartridge 1.10
Loading Paper 1.12
Making Connections 1.15
Turning the Machine On 1.18
About Samsung Software 1.19
Printer Driver Features 1.20
Installing Samsung Software in Windows 1.21
System Requirements 1.21
Installing Samsung Software 1.22
Installing Samsung SmarThru 1.25
Repairing Software 1.28
Removing Software 1.29
Uninstalling the MFP Driver 1.29
Uninstalling Samsung SmarThru 1.30
Changing the Display Language 1.32
Setting the Machine ID 1.33
Entering Characters Using the Number Keypad 1.34
Setting the Date and Time 1.36
Changing the Clock Mode 1.37
Setting the Paper Type and Size 1.37
Setting Sounds 1.38
Speaker, Ringer, Key Sound and Alarm Sound 1.38
Speaker Volume 1.39
Using the Save Modes 1.39
Toner Save Mode 1.39
Toll Save Mode 1.40
Power Save Mode 1.41

Chapter 2: PAPER HANDLING

Selecting Print Materials 2.2
Type, Input Sources and Capacities 2.2
Guidelines for Paper and Special Materials 2.3
Selecting an Output Location 2.4
Printing to the Front Output Tray (Face down) 2.5
Printing to the Rear Output Slot (Face up) 2.5
Loading Paper in the Paper Tray 2.7
Using the Manual Feeder 2.8
Setting the Paper Type and Size for the Manual Feeder 2.10

Chapter 3: PRINTING

Printing a Document in Windows 3.2
Canceling a Print Job 3.5
Using a Favorite Setting 3.6
Using Help 3.6
Setting Paper Properties 3.7
Setting Graphic Properties 3.8
Printing Multiple Pages on One Sheet of the Paper 3.10
Printing a Reduced or Enlarged Document 3.12
Fitting Your Document to a Selected Paper Size 3.13
Printing Posters 3.14
Using Watermarks 3.15
Using an Existing Watermark 3.15
Creating a Watermark 3.16
Editing a Watermark 3.17
Deleting a Watermark 3.17
Using Overlays 3.18
What is an Overlay? 3.18
Creating a New Page Overlay 3.18
Using a Page Overlay 3.20
Deleting a Page Overlay 3.21
Setting Up the Locally Shared Printer 3.22
In Windows 9x/Me 3.22
In Windows NT 4.0/2000/XP 3.23

Chapter 4: COPYING

Loading Paper for Copying 4.2
Preparing a Document 4.2
Making a Copy 4.3
Setting Copy Options 4.4
Darkness 4.4
Original Type 4.5
Number of Copies 4.5
Reduced/Enlarged Copying 4.6
Changing the Default Settings 4.7
Setting the Time Out Option 4.8

Chapter 5: SCANNING

Scanning Basics 5.2
Scanning Using Samsung SmarThru 5.2
Scanning Process with TWAIN-enabled Software 5.6

Chapter 6: FAXING

Changing the Fax Setup options 6.2
Available Fax Setup Options 6.3
Loading a Document 6.5
Adjusting the Document Resolution 6.6
Sending a Fax Automatically 6.7
Sending a Fax Manually 6.8
Redialing the Last Number 6.8
Confirming Transmission 6.9
Automatic Redialing 6.9
About Receiving Modes 6.10
Loading Paper for Receiving Faxes 6.11
Receiving Automatically in Fax Mode 6.11
Receiving Manually in Tel Mode 6.11
Receiving Automatically in Ans/Fax Mode 6.12
Receiving Manually Using an Extension Telephone 6.13
Receiving Faxes in the Memory 6.13
One-touch Dialing 6.14
    Storing a Number for One-touch Dialing 6.14
    Sending a Fax using a One-touch Number 6.15
Speed Dialing 6.15
    Storing a Number for Speed Dialing 6.15
    Sending a Fax using a Speed Number 6.16
Group Dialing 6.17
    Setting a Group Dial Number 6.17
    Editing Group Dial Numbers 6.18
    Sending a Fax Using Group Dialing (Multi-address Transmission) 6.19
Searching for a Number in the Memory 6.19
    Searching Sequentially through the Memory 6.19
    Searching with a Particular First Letter 6.20
Printing a Phonebook List 6.20
Sending Broadcasting Faxes 6.21
Sending a Delayed Fax 6.22
Sending a Priority Fax 6.24
Polling a Remote Machine 6.25
Adding Documents to a Scheduled Fax 6.26
Canceling a Scheduled Fax 6.27
Using Secure Receiving Mode 6.28
Printing Reports 6.30
Using Advanced Fax Settings 6.32
    Changing Setting Options 6.32
    Advanced Fax Setting Options 6.33
Using the Remote Control Panel 6.35

Chapter 7: USING OTHER OPERATING SYSTEMS

Installing Software in Macintosh 7.2
System Requirements 7.2
Installing Software 7.3
Setting Up Your Printer 7.6
Printing a Document 7.7
Using Advanced Printing Features 7.9
Mac OS 8.6 ~ 9.x 7.9
Mac OS 10.x 7.12
Getting Started 7.14
Installing the MFP Driver 7.15
System Requirements 7.15
Installing the MFP Driver 7.15
Uninstalling the MFP Driver 7.17
Using the MFP Configurator 7.18
Opening the MFP Configurator 7.18
Printers Configuration 7.19
Scanners Configuration 7.20
MFP Ports Configuration 7.21
Configuring Printer Properties 7.22
Printing a Document 7.23
Printing from Applications 7.23
Printing Files 7.24
Scanning a Document 7.25
Using the Image Editor 7.29

Chapter 8: MAINTENANCE

Clearing the Memory 8.2
Adjusting Shading 8.3
Cleaning Your Machine 8.3
Cleaning the Outside 8.4
Cleaning the Inside 8.4
Cleaning the Scan Unit 8.5
Maintaining the Toner Cartridge 8.7
Redistributing Toner 8.7
Replacing the Toner Cartridge 8.8
Setting the Notify Toner Option 8.10
Cleaning the Drum 8.11
Ignoring the Toner Empty Message 8.11
Consumables and Replacement Parts 8.12
Replacing the ADF Rubber Pad 8.13

Chapter 9: TROUBLESHOOTING

Clearing Document Jams 9.2
Input Misfeed 9.2
Exit Misfeed 9.2
Clearing Paper Jams 9.3
In the Paper Tray 9.4
In the Paper Exit Area 9.4
In the Fuser Area or Around the Toner Cartridge 9.5
In the Manual Feeder 9.6
Tips for Avoiding Paper Jams 9.7

Clearing LCD Error Messages 9.8
Solving Problems 9.11
Paper Feeding Problems 9.11
Printing Problems 9.12
Printing Quality Problems 9.15
Copying Problems 9.19
Scanning Problems 9.20
Faxing Problems 9.21
Common Macintosh Problems 9.23
Common Linux Problems 9.24

Appendix A: SPECIFICATIONS

General Specifications A.2
Scanner and Copier Specifications A.3
Printer Specifications A.4
Facsimile Specifications A.5
Paper Specifications A.6
Overview A.6
Supported Sizes of Paper A.6
Guidelines for Using Paper A.7
Paper Specifications A.8
Paper Output Capacity A.8
Paper Storage Environment A.9
Envelopes A.9
Labels A.11
Transparencies A.11

Important Precautions and Safety Information

When using this machine, these basic safety precautions should always be followed to reduce risk of fire, electric shock, and injury to people:

1. Read and understand all instructions.

2. Use common sense whenever operating electrical appliances.

3. Follow all warnings and instructions marked on the machine and in the literature accompanying the machine.

4. If an operating instruction appears to conflict with safety information, heed the safety information. You may have misunderstood the operating instruction. If you cannot resolve the conflict, contact your sales or service representative for assistance.

5. Unplug the machine from the AC wall socket and/or telephone jack before cleaning. Do not use liquid or aerosol cleaners. Use only a damp cloth for cleaning.

6. Do not place the machine on an unstable cart, stand or table. It may fall, causing serious damage.

7. Your machine should never be placed on, near or over a radiator, heater, air conditioner or ventilation duct.

8. Do not allow anything to rest on the power. Do not locate your machine where the cords will be abused by persons walking on them.

9. Do not overload wall outlets and extension cords. This can diminish performance, and may result in the risk of fire or electric shock.

10. Do not allow pets to chew on the AC power, telephone or PC interface cords.

11. Never push objects of any kind into the machine through case or cabinet openings. They may touch dangerous voltage points, creating a risk of fire or shock. Never spill liquid of any kind onto or into the machine.

12. You machine may have a heavy cover for optimal pressure on the document for the best scanning and/or faxing. In this case, replace the cover after placing document on the scan glass, by holding and moving it down slowly until it seats on its location.

13. To reduce the risk of electric shock, do not disassemble the machine. Take it to a qualified service technician when repair work is required. Opening or removing covers may expose you to dangerous voltages or other risks. Incorrect reassembly could cause electric shock when the unit is subsequently used.

14. Unplug the machine from the telephone jack, PC and AC wall outlet, and refer servicing to qualified service personnel under the following conditions:
    - When any part of the power cord, plug, or connecting cable is damaged or frayed.
    - If liquid has been spilled into the machine.

- If the machine has been exposed to rain or water.
- If the machine does not operate properly after instructions have been followed.
- If the machine has been dropped, or the cabinet appears damaged.
- If the machine exhibits a sudden and distinct change in performance.

15. Adjust only those controls covered by the operating instructions. Improper adjustment of other controls may result in damage, and may require extensive work by a qualified service technician to restore the machine to normal operation.

16. Avoid using this machine during a lightning storm. There may be a remote risk of electric shock from lightning. If possible, unplug the AC power and telephone cord for the duration of the lightning storm.

17. SAVE THESE INSTRUCTIONS.

Laser Safety Statement

The printer is certified in the U.S. to conform to the requirements of DHHS 21 CFR, chapter 1 Subchapter J for Class I(1) laser products, and elsewhere is certified as a Class I laser product conforming to the requirements of IEC 825.

Class I laser products are not considered to be hazardous. The laser system and printer are designed so there is never any human access to laser radiation above a Class I level during normal operation, user maintenance, or prescribed service condition.

WARNING

Never operate or service the printer with the protective cover removed from Laser/ Scanner assembly. The reflected beam, although invisible, can damage your eyes.

CAUTION - INVISIBLE LASER RADIATION WHEN THIS COVER OPEN. DO NOT OPEN THIS COVER.

VORSICHT - UNSICHTBARE LASERSTRAHLUNG, WENN ABDECKUNG GE FFNET. NICHT DEM STRAHL AUSSETZEN.

ATTENTION - RAYONNEMENT LASER INVISIBLE EN CAS D OUVERTURE. EXPOSITION DANGEREUSE AU FAISCEAU.

ATTENZIONE - RADIAZIONE LASER INVISIBILE IN CASO DI APERTURA. EVITARE L ESPOSIZIONE AL FASCIO.

PRECAUCI N - RADIACI N LASER INVISIBLE CUANDO SE ABRE. EVITAR EXPONERSE AL RAYO.

PERIGO - RADIA O LASER INVISŒVEL AO ABRIR. EVITE EXPOSI O DIRECTA AO FEIXE.

GEVAAR - ONZICHTBARE LASERSTRALEN BIJ GEOPENDE KLEP. DEZE KLEP NIET OPENEN.

ADVARSEL. - USYNLIG LASERSTR LNING VED BNING, N R SIKKERHEDSBRYDERE ER UDE AF FUNKTION. UNDG UDSAETTELSE FOR STR LNING.

ADVARSEL. - USYNLIG LASERSTR LNING N R DEKSEL PNES. STIRR IKKE INN I STR LEN. UNNG EKSPONERING FOR STR LEN.

VARNING - OSYNLIG LASERSTR LNING N R DENNA DEL R PPEN OCH SP RREN R URKOPPLAD. BETRAKTA EJ STR LEN. STR LEN R FARLIG.

VARO! - AVATTAESSA JA SUOJALUKITUS OHITETTAESSA OLET ALTTIINA N KYM TT M LLE LASER- S TEILYLLE L KATSO S TEESEEN.

注 意 - 严禁揭开此盖, 以免激光泄露灼伤

주 의 - 이 덮개를 열면 레이저광에 노출될 수 있으므로 주의하십시오.

Ozone Safety

During normal operation, this machine produces ozone. The ozone produced does not present a hazard to the operator. However, it is advisable that the machine be operated in a well ventilated area.

If you need additional information about ozone, please request your nearest Samsung dealer.

Power Saver

This machine contains advanced energy conservation technology that reduces power consumption when it is not in active use.

When the machine does not receive data for an extended period of time, power consumption is automatically lowered.

The energy star emblem does not represent EPA endorsement of any machine or service.

Recycling

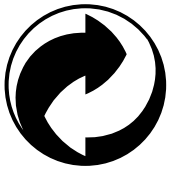

Please recycle or dispose of the packaging material for this product in an environmentally responsible manner.

Radio Frequency Emissions

FCC Information to the User

This equipment has been tested and found to comply with the limits for a Class B digital device, pursuant to Part 15 of the FCC Rules. These limits are designed to provide reasonable protection against harmful interference in a residential installation. This equipment generates, uses and can radiate radio frequency energy and, if not installed and used in accordance with the instructions, may cause harmful interference to radio communications. However, there is no guarantee that interference will not occur in a particular installation. If this equipment does cause harmful interference to radio or television reception, which can be determined by turning the equipment off and on, the user is encouraged to try to correct the interference by one or more of the following measures:

- Reorient or relocate the receiving antenna.
- Increase the separation between the equipment and receiver.
- Connect the equipment into an outlet on a circuit different from that to which the receiver is connected.
- Consult the dealer or experienced radio TV technician for help.

CAUTION: Change or modifications not expressly approved by the manufacturer responsible for compliance could void the user's authority to operate the equipment.

Canadian Radio Interference Regulations

This digital apparatus does not exceed the Class B limits for radio noise emissions from digital apparatus as set out in the interference-causing equipment standard entitled “Digital Apparatus”, ICES-003 of the Industry and Science Canada.

Cet appareil numérique respecte les limites de bruits radioélectriques applicables aux appareils numériques de Classe B prescrites dans la norme sur le matériel brouilleur: “Appareils Numériques”, ICES-003 édictée par l’Industrie et Sciences Canada.

Fax Branding

The Telephone Consumer Protection Act of 1991 makes it unlawful for any person to use a computer or other electronic device to send any message via a telephone facsimile machine unless such message clearly contains in a margin at the top or bottom of each transmitted page or on the first page of the transmission the following information:

(1) the date and time of transmission

(2) identification of either business, business entity or individual sending the message; and

(3) telephone number of either the sending machine, business, business entity or individual.

The Telephone Company may make changes in its communications facilities, equipment operations, or procedures where such action is reasonably required in the operation of its business and is not inconsistent with the rules and regulations in FCC Part 68. If such changes can be reasonably expected to render any customer terminal equipment incompatible with telephone company communications facilities, or require modification or alteration of such terminal equipment, or otherwise materially affect its use or performance, the customer shall be given adequate notice in writing, to allow the customer an opportunity to maintain uninterrupted service.

Ringer Equivalence Number

The Ringer Equivalence Number and FCC Registration Number for this machine may be found on the label located on the bottom or rear of the machine. In some instances you may need to provide these numbers to the telephone company.

The Ringer Equivalence Number (REN) is a measure of the electrical load placed on the telephone line, and is useful for determining whether you have "overloaded" the line. Installing several types of equipment on the same telephone line may result in problems making and receiving telephone calls, especially ringing when your line is called. The sum of all Ringer Equivalence Numbers of the equipment on your telephone line should be less than five in order to assure proper service from the telephone company. In some cases, a sum of five may not be usable on your line. If any of your telephone equipment is not operating properly, you should immediately remove it from your telephone line, as it may cause harm to the telephone network.

WARNING:

FCC Regulations state that changes or modifications to this equipment not expressly approved by the manufacturer could void the user's authority to operate this equipment. In the event that terminal equipment causes harm to the telephone network, the telephone company should notify the customer that service may be stopped. However, where prior notice is impractical, the company may temporarily cease service, providing that they:

a) promptly notify the customer.

b) give the customer an opportunity to correct the equipment problem.

c) inform the customer of the right to bring a complaint to the Federal Communication Commission pursuant to procedures set out in FCC Rules and Regulations Subpart E of Part 68.

You should also know that:

- Your machine is not designed to be connected to a digital PBX system.
- If you intend to use a computer modem or fax modem on the same phone line as your machine, you may experience transmission and reception problems with all the equipment. It is recommended that no other equipment, except for a regular telephone, share the line with your machine.
- If your area experiences a high incidence of lightning or power surges, we recommend that you install surge protectors for both the power and the telephone lines. Surge protectors can be purchased from your dealer or telephone and electronic specialty stores.
- When programming emergency numbers and/or making test calls to emergency numbers, use a non-emergency number to advise the emergency service dispatcher of your intentions. The dispatcher will give you further instructions on how to actually test the emergency number.
- This machine may not be used on coin service or party lines.
- This machine provides magnetic coupling to hearing aids.
- You may safely connect this equipment to the telephone network by means of a standard modular jack, USOC RJ-11C.

Declaration of Conformity (European Countries)

Approvals and Certifications

The CE marking applied to this product symbolizes Samsung Electronics Co., Ltd. Declaration of Conformity with the following applicable 93/68/EEC Directives of the European Union as of the dates indicated:

January 1, 1995: Council Directive 73/23/EEC Approximation of the laws of the member states related to low voltage equipment.

January 1, 1996: Council Directive 89/336/EEC (92/31/EEC), approximation of the laws of the Member States related to electromagnetic compatibility.

March 9, 1999: Council Directive 1999/5/EC on radio equipment and telecommunications terminal equipment and the mutual recognition of their conformity.

A full declaration, defining the relevant Directives and referenced standards can be obtained from your Samsung Electronics Co., Ltd. representative.

EC Certification

Certification to 1999/5/EC Radio Equipment & Telecommunications Terminal Equipment Directive (FAX)

This Samsung product has been self-certified by Samsung for pan-European single terminal connection to the analogue public switched telephone network (PSTN) in accordance with Directive 1999/5/EC. The product has been designed to work with the national PSTNs and compatible PBXs of the European countries:

In the event of problems, you should contact the Euro QA Lab of Samsung Electronics Co., Ltd. in the first instance.

The product has been tested against TBR21. To assist in the use and application of terminal equipment which complies with this standard, the European Telecommunication Standards Institute (ETSI) has issued an advisory document (EG 201 121) which contains notes and additional requirements to ensure network compatibility of TBR21 terminals. The product has been designed against, and is fully compliant with, all of the relevant advisory notes contained in this document.

Replacing the Fitted Plug (for UK Only)

IMPORTANT

The mains lead for this machine is fitted with a standard (BS 1363) 13 amp plug and has a 13 amp fuse. When you change or examine the fuse, you must re-fit the correct 13 amp fuse. You then need to replace the fuse cover. If you have lost the fuse cover, do not use the plug until you have another fuse cover.

Please contact the people from you purchased the machine.

The 13 amp plug is the most widely used type in the UK and should be suitable. However, some buildings (mainly old ones) do not have normal 13 amp plug sockets. You need to buy a suitable plug adaptor. Do not remove the moulded plug.

WARNING

If you cut off the moulded plug, get rid of it straight away.
You cannot rewire the plug and you may receive an electric shock if you plug it into a socket.

IMPORTANT WARNING: You must earth this machine.

The wires in the mains lead have the following color code:

- Green and Yellow: Earth
- Blue: Neutral
- Brown: Live

If the wires in the mains lead do not match the colors marked in your plug, do the following:

You must connect the green and yellow wire to the pin marked by the letter “E” or by the safety `Earth symbol' or colored green and yellow or green.

You must connect the blue wire to the pin which is marked with the letter “N” or colored black.

You must connect the brown wire to the pin which is marked with the letter “L” or colored red.

You must have a 13 amp fuse in the plug, adaptor, or at the distribution board.

SAMSUNG ELECTRONICS

EU Declaration of Conformity (R&TTE)

We, Samsung Electronics Co., Ltd.

1. Samsung Electronics Co.,Ltd.
#259, Gongdan-dong, Gumi-City, Gyungbuk, KOREA, 730-030
(factory name, address)

declare under our sole responsibility that the product

Multi-Function Laser Printer model "SCX-4216F/ SCX-4116/SCX-4016(Samsung)/4038-xxx(Lexmark)"

to which this declaration relates is in conformity w

R&TTE Directive 1999/5/EC
Low Voltage Directi
EMC Directive **3/68/EEC**

Position Only

By application of the f ing standards

R&TTE : TBR 21

LVD : EN 60950:2000

EMC : EN55022:1998+A1:2000, EN61000-3-2:2000, EN61000-3-3:1995+A1:2001, EN55024:1998+A1:2001

(Manufacturer)

Samsung Electronics Co.,Ltd.
#259,Gongdan-Dong,Gumi-City
Gyungbuk, Korea 730-030

2008-03-04
(place and date of issue)

任煥淳

Whan-Soon Yim / Senior Manager
(name and signature of authorized person)

(Representative in the EU)

Samsung Electronics Euro QA Lab.
Blackbushe Business Park
Saxony Way, Yateley, Hampshire
GU46 6GG, UK

2008-03-04
(place and date of issue)

In-Seop Lee / Manager
(name and signature of authorized person)

Differences Between British and American English

British English	American English
(Re)dialling	(Re)dialing
Colour	Color
Emphasise	Emphasize
Recognise	Recognize
Organise	Organize
Authorise	Authorize
Cancelling	Canceling
Customise	Customize

WARNING

- Do not disassemble the machine as it may give you an electric shock.
- If you print large amount of copies, the surface of the output tray may become hot. Be careful not to touch the surface, especially for children.

1 GETTING STARTED

Thank you for purchasing this multifunctional product. Your machine provides you with printing, copying, scanning, and faxing functions!

This chapter gives you step-by-step instructions for setting up your machine.

This chapter includes:

- **Unpacking**
- **Understanding the Component Location**
- **Attaching Accessories**
- **Installing the Toner Cartridge**
- **Loading Paper**
- **Making Connections**
- **Turning the Machine On**
- **About Samsung Software**
- **Installing Samsung Software in Windows**
- **Removing Software**
- **Changing the Display Language**
- **Setting the Machine ID**
- **Setting the Date and Time**
- **Setting the Paper Type and Size**
- **Setting Sounds**
- **Using the Save Modes**

Unpacking

Remove the machine and all accessories from the packing carton. Make sure that the machine has been packed with the following items. If there is a missing item, contact the retailer where you bought the machine:

Starter Toner Cartridge

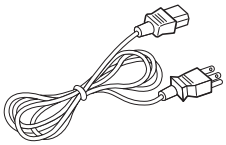

AC Power Cord*

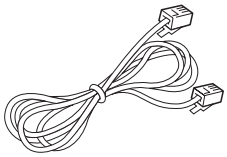

Telephone Line Cord*

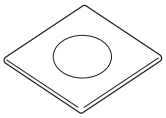

CD-ROM**

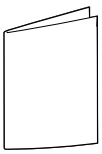

Quick Install Guide

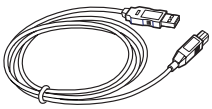

USB Cable

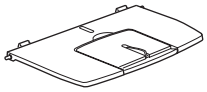

Docoment Output Support

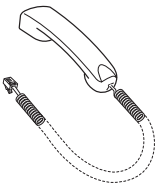

Handset

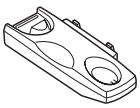

Cradle

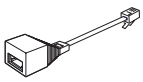

TAM Lead
(for UK only)

* The appearance of the power cord and the telephone line cord may differ according to your country's specifications.

** The CD-ROM contains the MFP driver, SmarThru software, the user's guides and the Adobe Acrobat Reader program.

NOTES:

- You should use the telephone line cord which is supplied with your machine. If you are replacing it with another vendor's, it should be AWG #26 or lower gage.
- The power cord must be plugged into a grounded power socket.
- You can purchase and install the optional Network Print Server. For details, refer to the user's guide supplied with your Network Print Server.

Remove the packing tape from the front, back and sides of the machine.

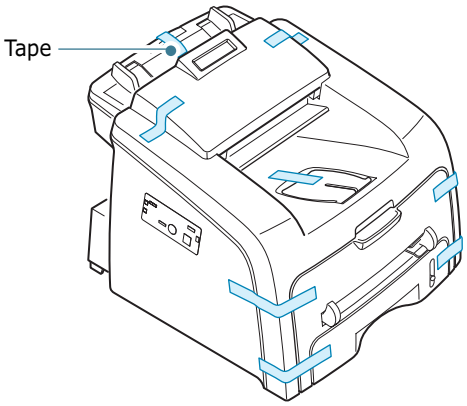

Selecting a Location

Select a level, stable place with adequate space for air circulation. Allow extra space for opening covers and trays.

The area should be well-ventilated and away from direct sunlight or sources of heat, cold and humidity. Do not set the machine close to the edge of your desk or table.

Clearance Space

- **Front**: 482.6 mm (enough space so that the paper tray can be removed)
- **Back**: 250 mm (enough space for ventilation)
- **Right**: 100 mm
- **Left**: 100 mm (enough space for ventilation)

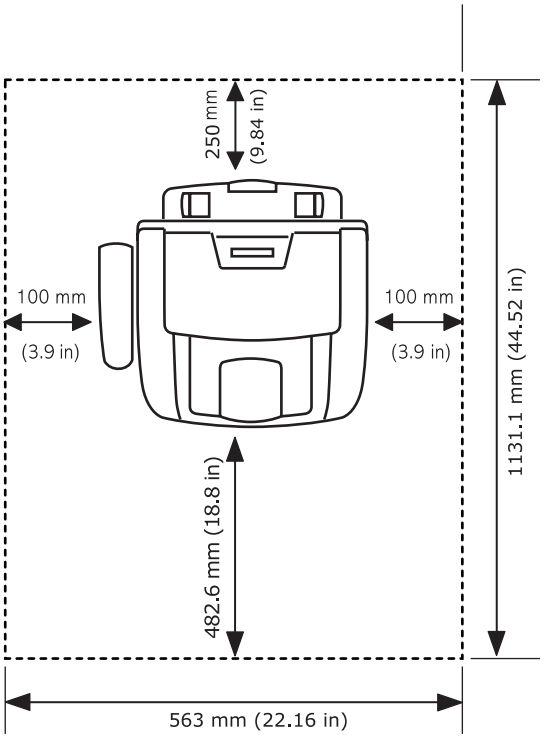

Understanding the Component Location

These are the main components of your machine:

Front View

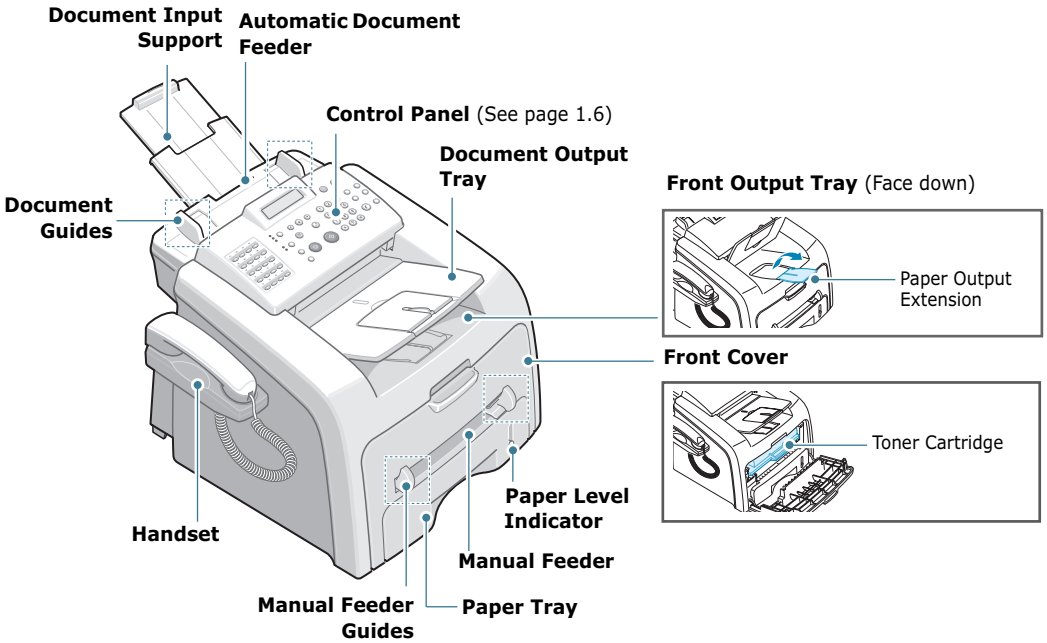

Rear View

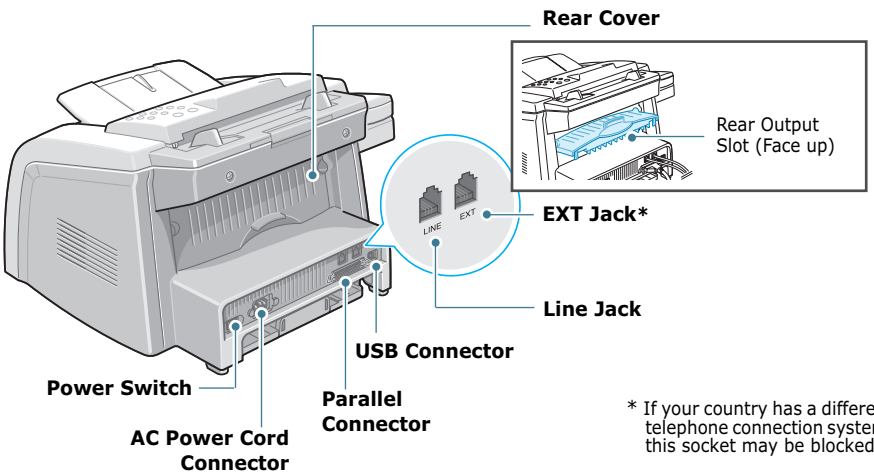

* If your country has a different telephone connection system, this socket may be blocked.

Control Panel Functions

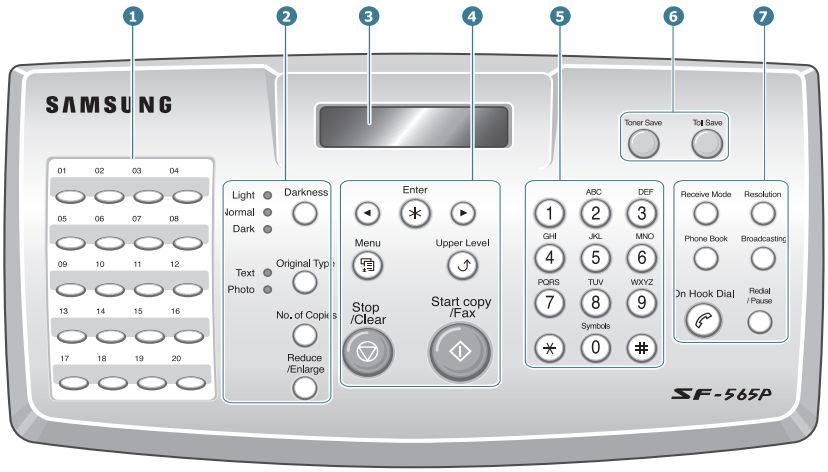

1	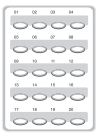	Use to store frequently-dialed fax number and dial them with a touch of the buttons.
2 COPY	Darkness	Adjusts the brightness of the documents for the current copy job.
	Original Type	Selects the document type for the current copy job.
	Reduce /Enlarge	Makes a copy smaller or larger than the original document.
	No. of Copies	Selects the number of copies.
3		Displays the current status and prompts during an operation.
4	◄ ►	Scrolls through the options available for the selected menu item.
	Enter	Confirms the selection on the display.
	Menu	Enters Menu mode and scrolls through the menus available.

4	Upper Level	Sends you back to the upper menu level.
	Stop /Clear	Stops an operation at any time. In Standby mode, clears/cancels the copy options, such as the darkness, the document type setting, the copy size and the number of copies.
	Start Copy /Fax	Starts a job.
5	1 2 3 4 5 6 7 8 9 * 0 #	Dials a number or enters alphanumeric characters.
6 SAVE	Toner Save	Allows you to save on toner by using less toner to print a document.
	Toll Save	Allows you to save on call costs by sending a fax at a preset toll-saving time. Using this feature, you can take advantage of lower long distance rates at night, for example.
7 FAX	Receive Mode	Allows you to select the fax receiving mode.
	Phone Book	• Allows you to store frequently-dialed fax numbers using a one or two-digit speed dial or group number for automatic dialing and edit the stored numbers. • Allows you to print a Phonebook list.
	Resolution	Adjusts the resolution of the documents for the current fax job.
	Broadcasting	Allows you to send a fax to multiple destinations.
	On Hook Dial	Engages the telephone line.
	Redial / Pause	Redials the last number in Standby mode or inserts a pause into a fax number in Edit mode.

Attaching Accessories

Document Output Support

Insert the two tabs on the supplied document output support into the slots on both sides of the paper output tray.

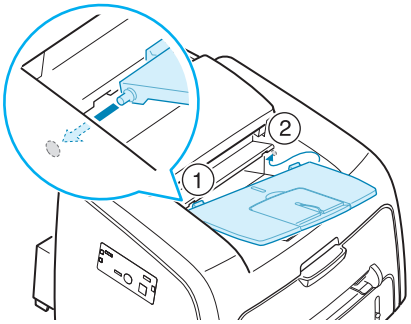

Fold out the extender, if necessary.

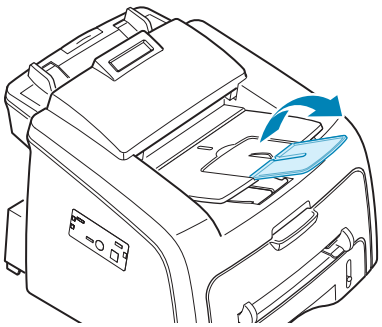

Handset and Handset Cradle

1 Plug the end of the coiled cord of the handset into the jack on the left side of your machine.

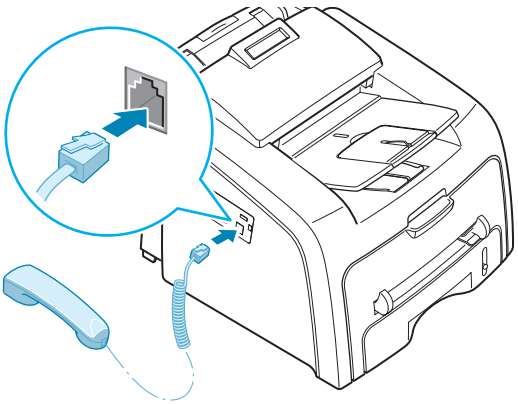

2 Holding the cradle as shown, attach the handset cradle to the machine.

① Insert the two tabs of the cradle into the slots on the left side of the machine as shown.

② Push the cradle toward the machine until it locks into place.

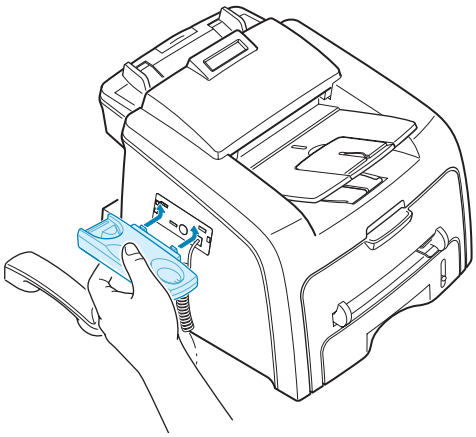

NOTE: To remove the cradle, push it down, pressing the latch on the bottom of the cradle.

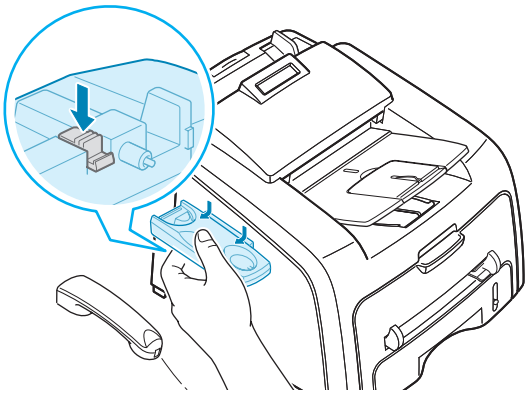

Installing the Toner Cartridge

1 Open the front cover.

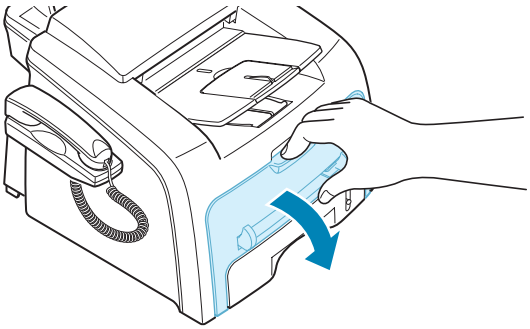

2 Remove the starter toner cartridge from its bag. Gently roll the cartridge 5 or 6 times to distribute the toner evenly inside the cartridge.

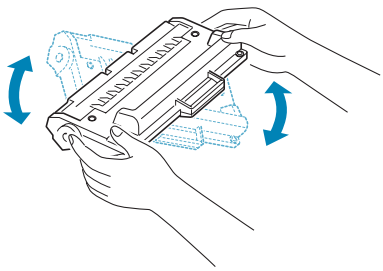

Thoroughly rolling the cartridge will assure the maximum copies per cartridge.

CAUTIONS:

- To prevent damage, do not expose the toner cartridge to light for more than a few minutes. Cover it with a piece of paper, if left exposed for more than a few minutes.
- If toner gets on your clothing, wipe it off with a dry cloth and wash clothing in cold water. Hot water sets toner into fabric.

3 Slide the toner cartridge into the machine until it locks into place completely.

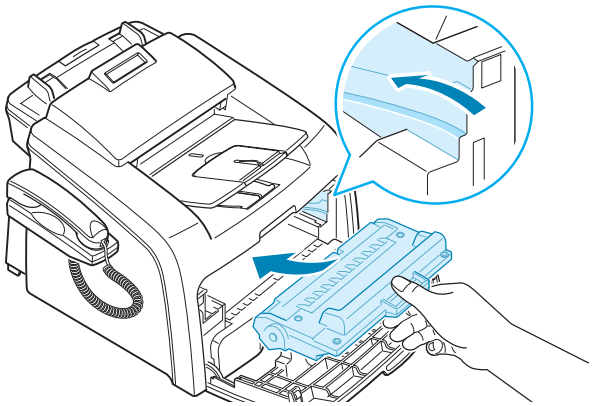

4 Close the front cover. Make sure that the cover is securely closed.

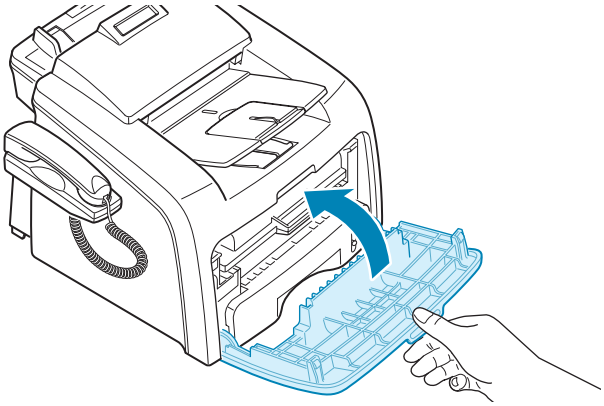

Loading Paper

You can load approximately 250 sheets.

To load a stack of Letter-sized paper:

1 Pull open the paper tray and remove it from the machine.

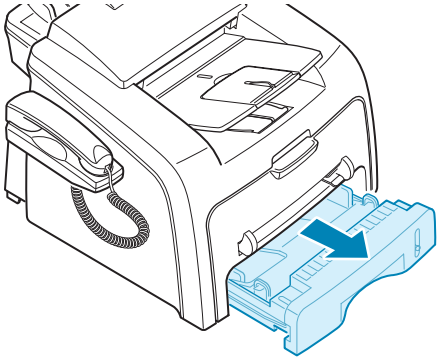

2 Push down on the pressure plate until it locks into place.

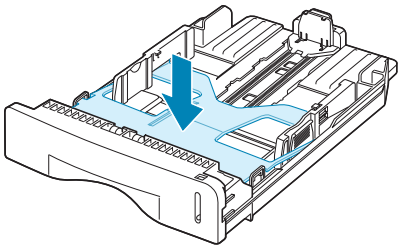

3 Fan the edges of the paper stack to separate the pages. Then tap the stack on a flat surface to even it up.

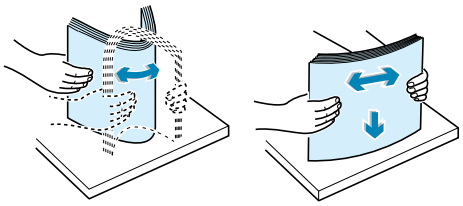

4 Insert the paper stack into the paper tray with the side you want to print facing up.

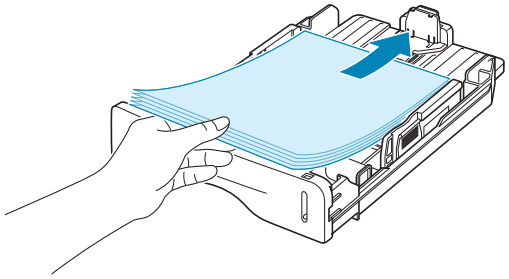

NOTE: If you want to load a different size of paper, you need to adjust the paper guides. For details, see page 1.14.

5 Pay attention to the paper limit mark on the left inside wall of the tray. Paper overloading may cause paper jams.

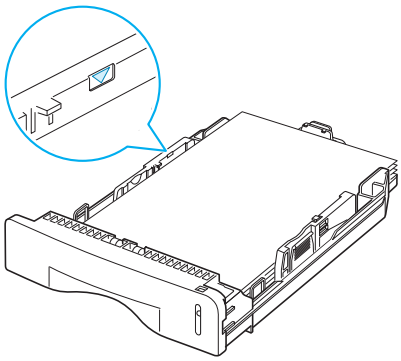

6 Insert and slide the paper tray back into the machine.

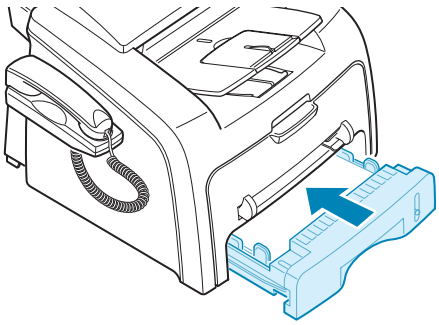

NOTE: After you load the paper, you need to set up your machine for the paper type and size you loaded. See page 1.37 for copying and faxing, or page 3.7 for PC-printing.

Changing the Paper Size in the Paper Tray

To load longer sizes of paper, such as Legal-sized paper, you need to adjust the paper guides to extend the paper tray.

1. After pressing and unlatching the guide lock, slide the paper length guide out completely to extend the paper tray to its full length.

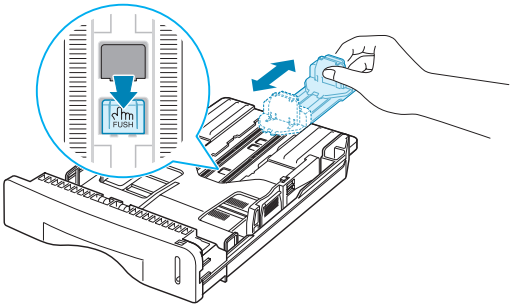

2. After inserting paper into the tray, slide in the guide until it lightly touches the end of the paper stack.

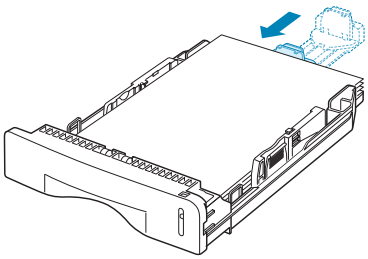

For the paper smaller than Letter, adjust the front paper length guide.

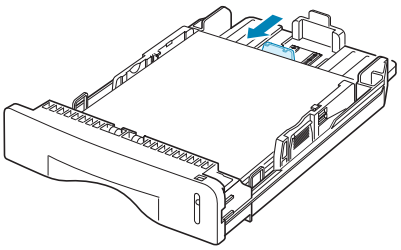

3 Pinching the paper width guide as shown, move it toward the stack of paper until it lightly touches the side of the stack.

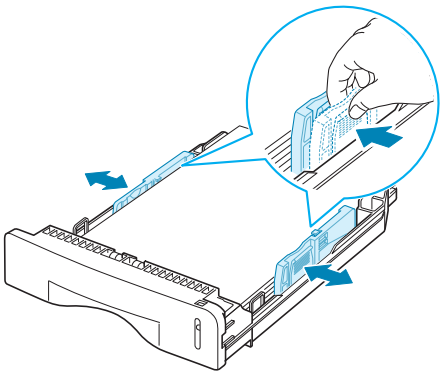

NOTES:

- Do not push the paper width guide far enough to cause the materials to warp.
- If you do not adjust the paper width guide, it may cause paper jams.

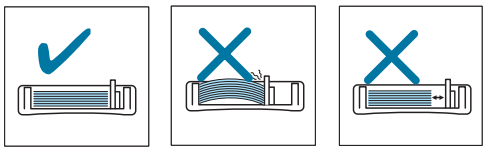

Making Connections

1 Plug the telephone line cord into the **LINE** jack and the other end into the wall jack.

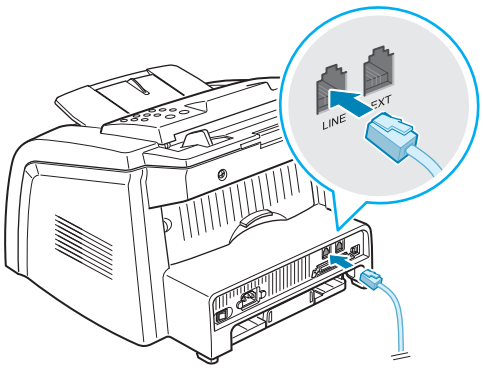

➜ To the walljack

2 To connect a telephone and/or answering machine to your machine, plug the cord of your extension phone or answering machine into the **EXT** jack.

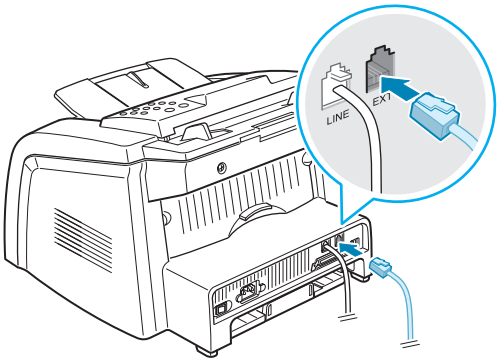

➜ To an extension phone or answering machine

UK users should plug the cord of the extension phone into the supplied TAM lead and plug the cord of the TAM lead into the **EXT** jack on the back of your machine.

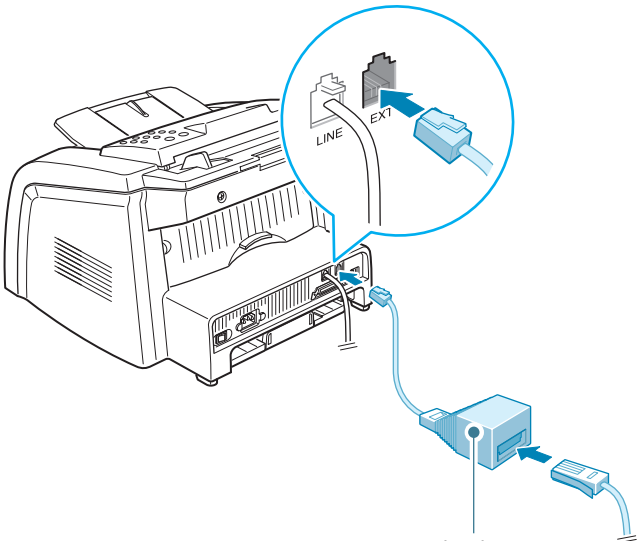

TAM lead
(For UK users only)

NOTES:

- Use the TAM lead and the telephone line cord supplied with your machine.
- In the United Kingdom, if a three-wire type (SHUNT-wire, older equipment) telephone or answering machine is connected to the EXT jack on the machine, the external equipment will fail to ring when receiving an incoming call as the machine is designed to operate with the latest technology. To prevent this incompatibility, use two-wire (newer equipment) telephone or answering machines.

3 Connect the supplied USB cable to the USB connector on your machine.

You must use a USB 1.1 compliant cable that is no more than 3 m in length.

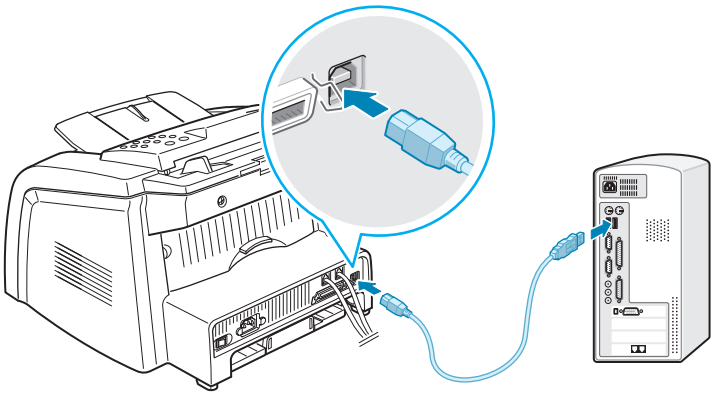

If you want to use a parallel printer cable, purchase only IEEE-1284 compliant parallel cable and connect it to the parallel connector on your machine.

Push the metal clips down to fit inside the notches on the cable plug.

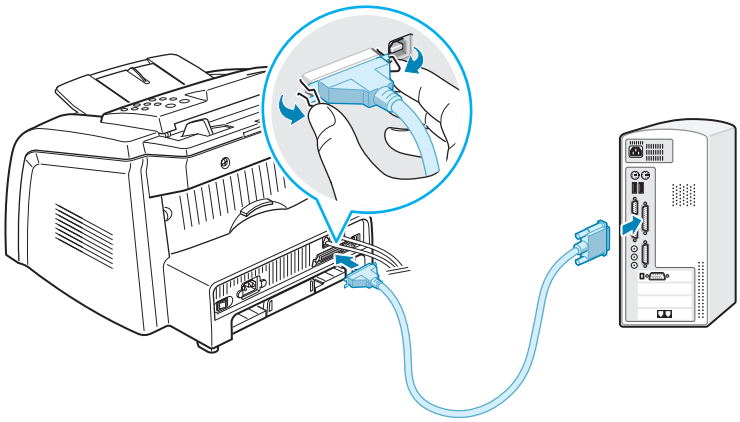

NOTES:

- You only need to connect one of the cables mentioned above. Do not use the parallel and the USB cables at the same time.
- If you are using a USB cable, you must be running Windows 98/Me/2000/XP.
- When using the USB connection, your machine provides two USB modes; Fast and Slow. Fast is the default mode. Some PC users may experience poor USB function in the default mode. If this occurs, select the Slow mode to achieve successful results. For details about changing the USB mode, see page 9.14.

Turning the Machine On

1 Plug one end of the supplied three-pronged electrical type cord into the AC socket on the machine and the other end into a properly grounded AC outlet.

2 Press the power switch to turn the machine on. "Warming Up Please Wait" appears on the display indicating that the machine is now on.

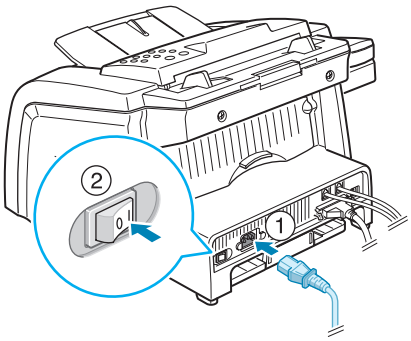

➜ To the AC walljack

To view your display text in another language, see page 1.32.

CAUTIONS:

- The fusing area inside the rear part of your machine becomes hot once the machine is turned on. Be careful when you access this area.
- Do not disassemble the machine when it is turned on as it may give you an electric shock.

Installing Software

About Samsung Software

You must install software using the supplied CD-ROM after you have set up your machine and connected it to your computer. The CD-ROM includes:

- Samsung software
- User's Guides
- Adobe Acrobat Reader

The CD-ROM provides you with the following software:

Windows MFP Driver

To use your machine as a printer and scanner in Windows, you must install the MFP driver. For information about installing the MFP driver in Windows, see page 1.21.

Macintosh Printer Driver

You can use your machine with Macintosh. For information about installing the printer driver from Macintosh, see page 7.2.

Linux Driver

You can print and scan in Linux using your machine. For information about installing the printer driver in Linux, see page 7.14.

Remote Control Panel

This Windows-based program is automatically installed when you install the MFP driver. For information about using the program, see page 6.35.

SmarThru Software

SmarThru is the accompanying Windows-based software for your multifunctional machine. SmarThru contains a powerful image editor that allows you to edit images in many ways and also includes powerful Internet mail client software.

With SmarThru, you can save the scanned images in a dedicated storage area for subsequent editing, sending via e-mail or fax, printing and processing by other programs of your choice.

OCR Software (AnyPage Lite)

AnyPage Lite, the OCR (Optical Character Recognition) program, is Windows-based software that has the ability to recognize most character formats so that a scanned document can be read and edited with word processing software.

NOTE: OCR is available only for languages supported by AnyPage Lite. Supported languages are Africans, Albanian, Basque, Bulgarian, Byelorussian, Catalan, Croatian, Czech, Danish, Digits, Dutch, English, Estonian, Finnish, French, German, Hungarian, Icelandic, Indonesian, Irish, Italian, Latvian, Lithuanian, Macedonian, Norwegian (Bokmal), Norwegian (Nynorsk), Polish, Portuguese, Romanian, Russian, Serbian, Slovak, Spanish, Swahili, Swedish, Tagalog, Turkish, Ukrainian, Korean.

Printer Driver Features

Your printer drivers support the following standard features:

- Paper source selection
- Paper size, orientation and media type
- number of copies

The following table lists a general overview of features supported by your printer drivers.

Feature	Printer Driver				
	Win9x/Me	Win2000/XP	WinNT4.0	Macintosh	Linux
Toner Save	Y	Y	Y	N	Y
Print quality option	Y	Y	Y	Y	Y
Poster printing	Y	Y	Y	N	N
Multiple pages per sheet (N-up)	Y	Y	Y	Y	Y(2,4)
Fit to page printing	Y	Y	Y	N	Y
Scale printing	Y	Y	Y	Y	Y
Watermark	Y	Y	Y	Y	N
Overlay	Y	Y	Y	N	N

NOTES:

- Some of feature are not supported on Mac OS 10.X such as Paper Source, Paper Type, Grayscale and Black&White.
- The Watermark feature is not supported on Mac OS 9.1 or higher.

Installing Samsung Software in Windows

System Requirements

Before you begin, ensure that your system meets the minimum requirements.

Supported Operating System

- Windows 95 OSR2
- Windows 98/Windows 98 SE
- Windows Me
- Windows NT 4 Workstation or Server with Service Pack 3
- Windows 2000 Professional or Advanced Server
- Windows XP Home edition or Professional.

Minimal Requirements

- Disk space: 120 MB for installation
- Memory: 64 MB
- CPU: Pentium II 233 or higher
- Required software: Internet Explorer 4.01

Recommended

- Disk space: 300 MB for installation
- Memory: 128 MB
- CPU: Pentium II 400 or higher
- Required software: Internet Explorer 5.5

NOTES:
- For Windows NT 4.0/2000/XP, the system administrator should install the software.
- Windows 95 versions prior to OSR2 are not recommended due to incompatibility with OLE/COM libraries.

Installing Samsung Software

NOTES:

- Cancel the "New Hardware Found" window when your computer boots up.
- Make sure that your machine is turned on and connected to your computer's parallel port or USB port **before installing software**. Windows 95 and Windows NT 4.0 do not support the USB connection.

1. Insert the supplied CD-ROM into your CD-ROM drive.

   The CD-ROM should automatically run and an installation window appears.

   If the installation window does not appear, click **Start** and then **Run**. Type **X:Setup.exe**, replacing "**X**" with the letter of your drive and click **OK**.

2. When the following window opens, connect your machine to the computer and turn the printer on. Then click **Next**.

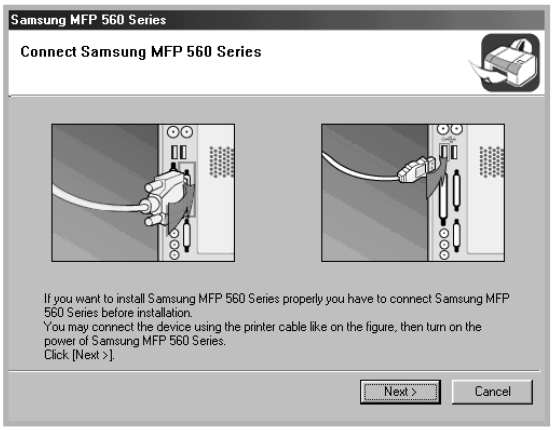

   If the machine is already connected and turned on, this screen does not appear. Skip to the next step.

3 Choose the installation type.

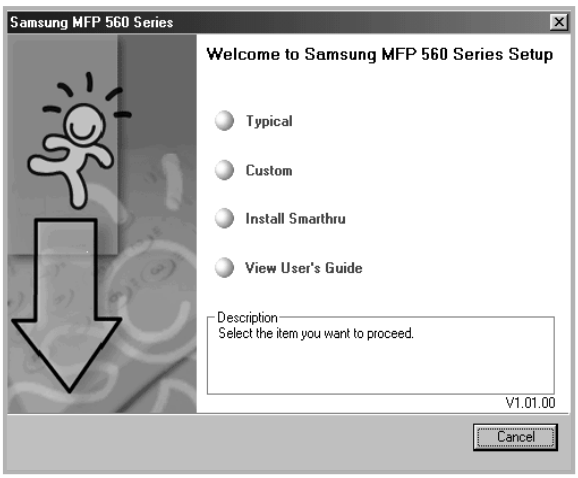

- **Typical**: Installs the common software for your printer, such as printer driver, scan driver, Remote Control Panel and SmarThru Software. This is recommeded for most users.
- **Custom**: Allows you to choose the language of the software and the components you want to install. After selecting the language and the component(s), click **Next**.

- **Install SmarThru**: Installs the SmarThru program. If you select to install SmarThru on this screen, follow from step 3 on page 1.25.
- **View User's Guide**: Allows you to view this User's Guide or SmarThru User's Guide. If your computer doesn't have Adobe Acrobat, click on this option and it will automatically install Adobe Acrobat for you.

4 After the installation is finished, the window asking you to print a test page appears. If you choose to print a test page, select the checkbox and click **Next**.

Otherwise, just click **Next** and skip to step 6.

5 When the test page prints out correctly, click **Yes**.

If not, click **No** to reprint it.

6 To register yourself as a user of Samsung Printers, select the checkbox and click **Finish**. You are now accessed to the Samsung web site.

Otherwise, just click **Finish**.

NOTES:

- When you want to use your machine with the parallel cable, remove the USB cable and connect the parallel cable. Then reinstall the printer driver; select **Start** → **Programs** → **Samsung MFP 560 Series** → **Maintenance** → **Repair** → **Printer**. If you have replaced the parallel cable with the USB cable, do the same to reinstall the driver.
- If your printer doesn't work properly, reinstall the printer driver.

Installing Samsung SmarThru

1 Insert the supplied CD-ROM into your CD-ROM drive.

2 Click **Install SmarThru**.

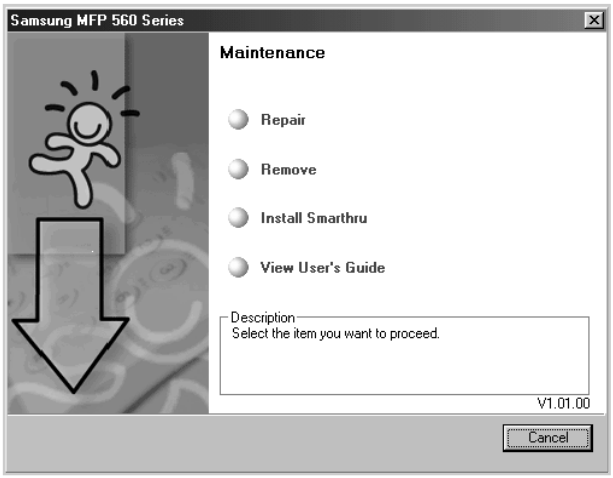

3 Click **Next**.

4 Follow the on-screen instructions and click **Next**.

5 Click **Next**.

6 Select the installation type and click **Next**.

The software installation supports two types of setup:

- **Typical**: Program will be installed with the most common options and is recommended for most users.
- **Custom**: You may choose the options you want to install.

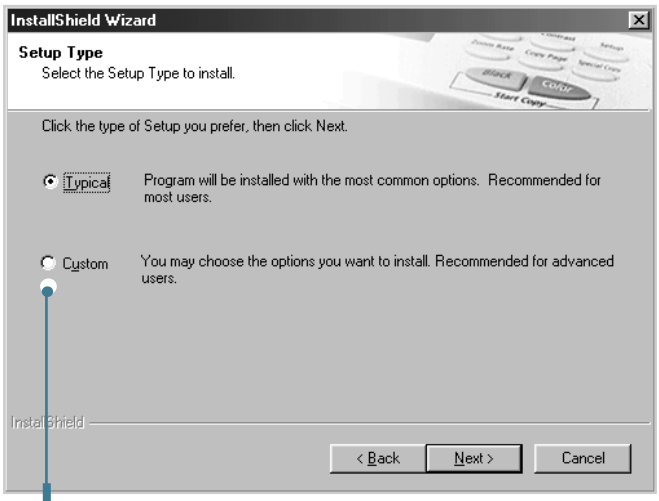

If you select the Custom installation, you may choose the components you want to install.

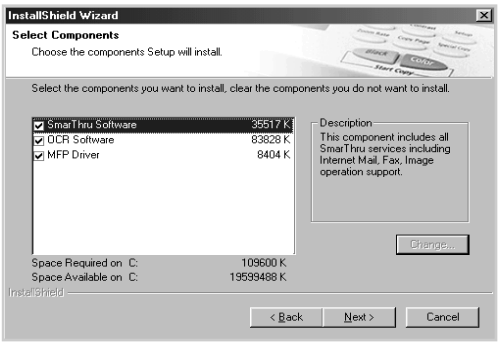

- **SmarThru Software:** to scan and edit images and to work with electronic documents.
- **OCR Software:** AnyPage Lite software to enable OCR.
- **MFP Driver:** to print and scan.

7 Choosing the **SmarThru networking** option allows you to share the modems on other computer in your network, and the scan device or to access similar devices on other computers.

Stand-alone configuration does not allow you to use any networking features, such as Remote Fax or Remote Scan service.

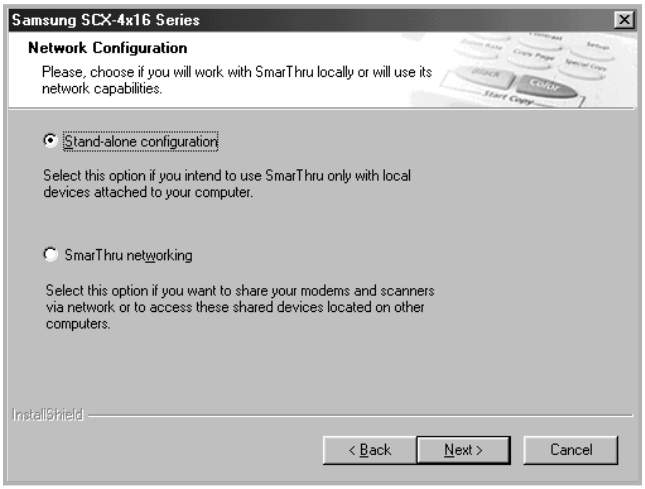

When you select **SmarThru networking**, you can elect to install it as a Server, a Client or both.

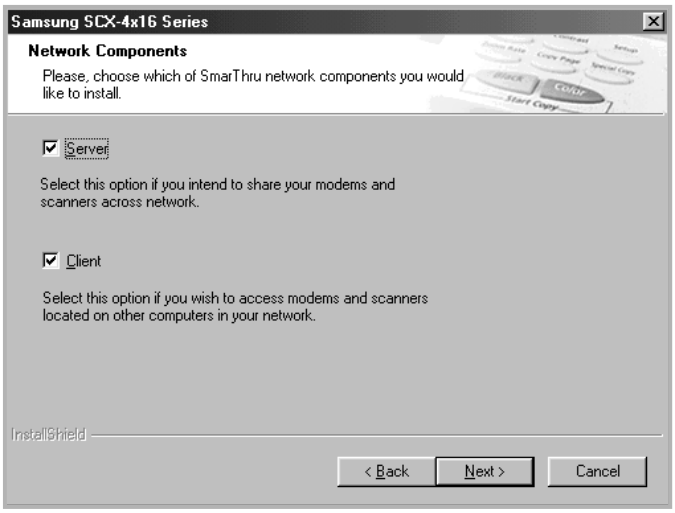

The **Server** option allows you to share a local fax modem and/or a scanner over a LAN. You can control sharing by managing a remote service user. The **Client** option allows you to use Remote Fax or Remote Scan services provided by a SmarThru Server over a LAN. You need to have a client account provided by the server. For details about Remote Fax/Scan Services, refer to the SmarThru User's Guide.

NOTE: When you install the software, the Digital Signature Not Found window appears in Windows 2000 and Windows XP. Click **Yes** in Windows 2000 and click **Continue Anyway** in Windows XP.

8 Follow the on-screen instructions to complete the installation.

9 When the installation is finished, click **Finish**.

Repairing Software

Repairing is required if your installation fails or the software does not work properly. This Repairing procedure does not repair SmarThru software.

1 You can select **Start** → **Programs** → **Samsung MFP 560 Series** →**Maintenance**.

2 Select **Repair** and then click **Next**.

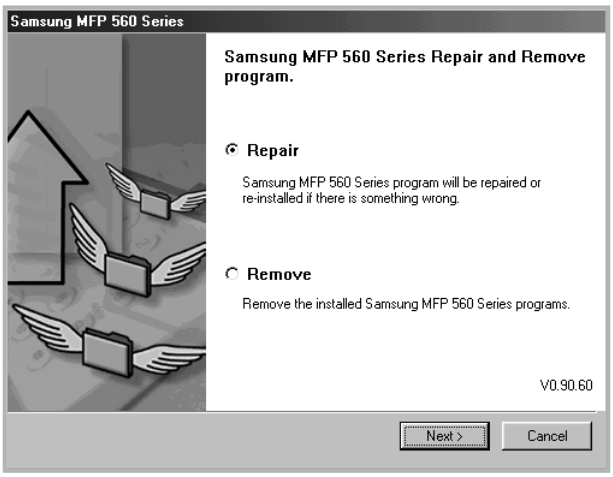

NOTE: If your machine is not connected to the computer, the Connect Samsung MFP 560 Series window opens. After connecting the machine, click **Next**.

3 Select the components you want to reinstall and click **Next**.

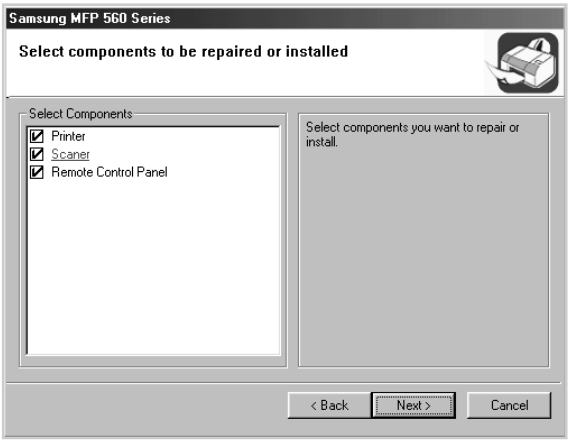

If you choose to repair the printer software, the window asking you to print a test page appears. Do as follows:

a. To print a test page, select the check box and click **Next**.

b. When the test page prints out correctly, click **Yes**.
If not, click **No** to reprint it.

4 When the reinstallation is done, click **Finish**.

Removing Software

Uninstall is required if you are upgrading the software or if your installation fails. You can uninstall the item you want using the Windows unInstallShield.

Uninstalling the MFP Driver

1 You can select **Start** → **Programs** → **Samsung MFP 560 Series** → **Maintenance**.

2 Select a component in the MFP driver to uninstall individually:

If you want to uninstall the printer driver, select **Printer**.

If you want to uninstall the twain driver, select **Twain Driver**.

If you want to uninstall the Remote Control Panel, select **Remote Control Panel**.

3 When your computer asks you to confirm your selection, click **Yes**.

The selected driver and all of its components are removed from your computer.

4 When the uninstallation is done, click **Finish**.

Uninstalling Samsung SmarThru

NOTE: Before beginning uninstallation, ensure that all applications are closed on your computer. A system reboot is required after the software is uninstalled.

1 From the **Start** menu, select **Programs**.

2 Select **Samsung SmarThru**, and then select **SmarThru 3 Uninstall**.

3 When your computer asks you to confirm your selection, click **Yes**. The Uninstall Options window appears.

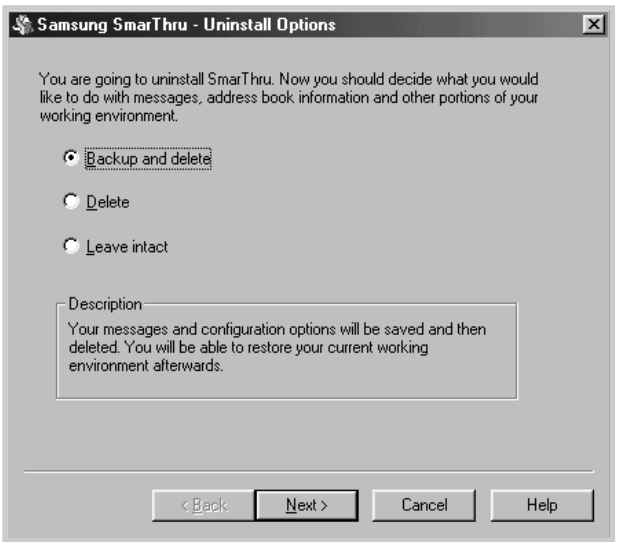

Uninstall options are:

- **Backup and delete**: Backs up all your data and options to a safe place. It then removes the SmarThru system including the data.

- **Delete**: Deletes all the SmarThru data and options. No backup or copying takes place. Be careful while using this option as you can easily lose your data.
- **Leave intact**: Uninstalls SmarThru software leaving data and options intact. This can be useful, if, for example, you decide to install the Stand Alone configuration over the SmarThru Networking. In this case, uninstall Samsung SmarThru having the **Leave intact** option set and install the SmarThru Stand Alone configuration.

4 After selecting the uninstall option, click **Next**.

5 When the uninstallation is done, the message window recommends restarting your computer. Click **OK**.

6 Click **Finish**.

When your computer doesn't shut down and restart automatically, you must shut it down manually and restart it before the changes are saved.

Setting Up the Machine System

Changing the Display Language

To change the language that displays on the display of the control panel, follow these steps:

1. Press **Menu** until "Machine Setup" appears on the top line of the display.
2. Press the scroll button (◄ or ►) until "Language" appears on the bottom line of the display.
3. Press **Enter**. The current setting appears on the bottom line of the display.
4. Press the scroll button (◄ or ►) until the language you want appears on the display.
5. Press **Enter** to save the selection.
6. To return to Standby mode, press **Stop/Clear**.

Setting the Machine ID

In some countries, you are required by law to indicate your fax number on any fax you send. The Machine ID, containing your telephone number and name or company name, will be printed at the top of each page sent from your machine.

1 Press **Menu** until "Machine Setup" appears on the top line of the display. The first available menu item, "Machine Id" displays on the bottom line.

2 Press **Enter**. The display asks you to enter the fax number.

If there is a number already set, the number appears.

3 Enter your fax number using the number keypad.

NOTE: If you make a mistake while entering numbers, press the ◄ button to delete the last digit.

4 Press **Enter** when the number on the display is correct. The display asks you to enter the ID.

5 Enter your name or company name using the number keypad.

You can enter alphanumeric characters using the number keypad, and include special symbols by pressing the **0** button.

For details on how to use the number keypad to enter alphanumeric characters, see page 1.34.

If you want to enter the same letter or number in succession (e.g. SS, AA, 777), enter one digit, move the cursor by pressing the ► button and enter the next digit.

If you want to insert a space in the name, you can also use the ► button to move the cursor to skip the position.

6 Press **Enter** when the name on the display is correct.

7 Press **Stop/Clear** to return to Standby mode.

Entering Characters Using the Number Keypad

As you perform various tasks, you need to enter names and numbers. For example, when you set up your machine, you enter your name or your company's name and telephone number. When you store one or two digit speed dial or group dial numbers, you may also enter the corresponding names.

To enter alphanumeric characters:

1. When you are prompted to enter a letter, locate the button labeled with the character you want. Press the button until the correct letter appears on the display.

   For example, to enter the letter **O**, press **6**, labeled with "MNO."

   Each time you press **6**, the display shows a different letter, **M**, **N**, **O** and finally **6**.

   You can enter special characters, such as space, plus sign, and so on. For details, see "Keypad Letters and Numbers" on page 1.35.

2. To enter additional letters, repeat step 1.

   If the next letter is printed on the same button, move the cursor by pressing the ► button and then press the button labeled with the letter you want. The cursor moves to the right and the next letter appears on the display.

   You can enter a space by pressing the # button.

3. When you finish entering letters, press **Enter**.

Keypad Letters and Numbers

Key	Assigned numbers, letters or characters
1	1 Space
2	A B C 2
3	D E F 3
4	G H I 4
5	J K L 5
6	M N O 6
7	P Q R S 7
8	T U V 8
9	W X Y Z 9
0	+ - , . ` / * # & 0

Changing Numbers or Names

If you make a mistake while entering a number or name, press the ◀ button to delete the last digit or character. Then enter the correct numbers or characters.

Inserting a Pause

With some telephone systems, you must dial an access code (9, for example) and listen for a second dial tone. In such cases, you must insert a pause in the telephone number. You can insert a pause while you are setting up one-touch or speed dial numbers.

To insert a pause, press **Redial/Pause** at the appropriate place while entering the telephone number. A "–" appears on the display at the corresponding location.

Setting the Date and Time

The current date and time are shown on the display when your machine is on and ready to work. All of your faxes will have the date and time printed on them.

NOTE: If power to the machine is cut off, you need to reset the correct time and date once the power is restored.

1. Press **Menu** until "Machine Setup" appears on the top line of the display.

2. Press the scroll button (◄ or ►) to display "Date & Time" on the bottom line and press **Enter**.

3. Enter the correct time and date using the number keypad.

   Month = 01 ~ 12

   Day = 01 ~ 31

   Year = requires all four digits

   Hour = 01 ~ 12 (12-hour mode)
   00 ~ 23 (24-hour mode)

   Minute = 00 ~ 59

NOTE: The date format may differ from each country.

   You can also use the scroll button (◄ or ►) to move the cursor under the digit you want to correct and enter a new number.

4. To select "AM" or "PM" for 12-hour format, press the * or # button or any number button.

   When the cursor is not under the AM or PM indicator, pressing the * or # button immediately moves the cursor to the indicator.

   You can change the clock mode to 24-hour format (e.g. 01:00 PM as 13:00). For details, see page 1.37.

5. Press **Enter** when the time and date on the display is correct.

   When you enter a wrong number, the machine beeps and does not proceed to the next step. If this happens, just reenter the correct number.

Changing the Clock Mode

You can set your machine to display the current time using either 12-hour or 24-hour format.

1 Press **Menu** until "Machine Setup" appears on the top line of the display.

2 Press the scroll button (◄ or ►) until you see "Clock Mode" on the bottom line and press **Enter**.

The clock mode currently set for the machine displays.

3 Press the scroll button (◄ or ►) to select the other mode and then press **Enter** to save the selection.

4 To return to Standby mode, press **Stop/Clear**.

Setting the Paper Type and Size

After loading paper in the paper tray, you need to set the paper type and size using the control panel buttons. These settings will apply to Fax and Copy modes. For PC-printing, you need to select the paper type and size in the application program you use.

1 Press **Menu**.

The display shows "Paper Setting" on the top line and the first menu item, "Paper Type," on the bottom line.

2 Press **Enter** to access the menu item.

3 Use the scroll button (◄ or ►) to find the paper type you are using and press **Enter** to save it.

4 Press the ► button to scroll to "Paper Size" and press **Enter** to access the menu item.

5 Press **Enter** when "Tray 1" displays on the bottom line.

6 Use the scroll button (◄ or ►) to find the paper size you are using and press **Enter** to save it.

7 To return to Standby mode, press **Stop/Clear**.

Setting Sounds

You can control the following sounds:

- Ringer: You can adjust the ringer volume.
- Key Sound: With this option set to "On," a key tone sounds each time any key is pressed.
- Alarm Sound: You can turn the alarm sound on or off. With this option set to "On," an alarm tone sounds when an error occurs or fax communication ends.
- Speaker: You can turn on or off the sounds from the telephone line through the speaker, such as a dial tone or a fax tone. With this option set to "COMM.," the speaker is on until the remote machine answers.

  You can adjust the speaker volume level using the **On Hook Dial** button or the handset.

Speaker, Ringer, Key Sound and Alarm Sound

1. Press **Menu** until "Sound/Volume" appears on the top line of the display.

2. Press the scroll button (◄ or ►) to scroll through the options. Press **Enter** when you see the sound option you want.

3. Press the scroll button (◄ or ►) to display the status or loudness you want for the option you have selected.

   For the ringer volume, you can select from "Off", "Low", "Med" and "High". Setting "Off" means that the ringer turns off. The machine works normally even if the ringer is turned off.

4. Press **Enter** to save the selection.

5. If necessary, repeat steps 2 through 4.

6. To return to Standby mode, press **Stop/Clear**.

Speaker Volume

To adjust the volume using the **On Hook Dial** button:

1. Press **On Hook Dial**. A dial tone sounds from the speaker.
2. Press the scroll button (◄ or ►) until you hear the loudness you want. The display shows the current volume level.
3. Press **On Hook Dial** to save the change and return to Standby mode.

To adjust the volume using the handset:

1. Pick up the handset. A dial tone sounds from the earpice.
2. Press the scroll button (◄ or ►) until you find the loudness you want. You can select either "High" or "Low".
3. Press **Enter** to save selection and replace the handset.

NOTE: You can adjust the speaker volume only when the telephone line is connected.

Using the Save Modes

Toner Save Mode

Toner Save mode allows your machine to use less toner on each page. Activating this mode extends the life of the toner cartridge longer than normal, but it reduces the print quality.

To turn the toner save mode on or off, press **Toner Save**.

- If the button backlight is on, the mode is active and the machine uses less toner when printing a document.
- If the button backlight is off, the mode is deactivated and the machine prints with the normal quality.

NOTE: For PC-printing, you can also turn on or off Toner Save mode in the printer properties. See page 3.9.

Toll Save Mode

Using the **Toll Save** button on the control panel, you can quickly set your machine to send the document(s) stored in the memory during the preset time slot, when the call charge is lowered. This Toll Save mode helps you to take advantage of lower long distance rates at night, for example.

NOTE: The toll-saving time slot may vary depending on your contract with a long distance phone company.

To turn the toll save mode on:

1. Press **Toll Save**. The button backlight turns on.
2. Press **Enter** when "Start Time" displays on the bottom line.
3. Enter the time when your machine starts sending toll save faxes, using the number keypad.

   To select "AM" or "PM" for 12-hour format, press the * or # button or any number button.
4. Press **Enter** when the starting time on the display is correct.
5. Press the scroll button (◄ or ►) to display "End Time" and press **Enter**.
6. Enter the time when the toll save transmission ends, using the number keypad.
7. Press **Enter** to save the setting.
8. To return to Standby Mode, press **Stop/Clear**.

Once Toll Save mode is activated, your machine stores all of the documents to be faxed into the memory and sends them at the programed time.

To turn Toll Save mode off, press **Toll Save** again. The button backlight turns off and the mode is deactivated.

NOTE: Once the toll-saving time is set, the **Toll Save** button allows you to only enable or disable Toll Save mode. To change the time setting, use the Toll Save item in the Advanced Fax menu. See page 6.33.

Power Save Mode

Power Save mode allows your machine to reduce power consumption when it is not in actual use. You can turn this mode on by selecting the length of time for which the machine waits after a job is printed before it switches to a reduced power state.

1. Press **Menu** until "Machine Setup" appears on top line of the display.
2. Press the scroll button (◄ or ►) until "Power Save" appears on the bottom line. Press **Enter**.
3. Press the scroll button (◄ or ►) to display "On" on the bottom line and press **Enter**.

   Selecting "Off" means that Power Save mode turns off.
4. Press the scroll button (◄ or ►) until the time settings you want appears.

   The available options are 5, 10, 15, 30 and 45 (minutes).
5. Press **Enter** to save the selection.
6. To return to Standby mode, press **Stop/Clear**.

MEMO

2 PAPER HANDLING

This chapter introduces you to the basics of selecting print materials and loading them into your machine.

This chapter includes:

- **Selecting Print Materials**
- **Selecting an Output Location**
- **Loading Paper in the Paper Tray**
- **Using the Manual Feeder**

Selecting Print Materials

You can print on a variety of print materials, such as plain paper, envelopes, labels, transparencies and so on. Always use print materials that meet the guidelines for use with this machine. See "Paper Specifications" on page A.6. To get the best possible print quality, use only high-quality copier-grade paper.

When you choose print materials, consider the following:

- Desired outcome: The paper you choose should be appropriate for your project.
- Size: You can use any size paper that fits easily within the paper adjusters of the paper tray.
- Weight: Your machine supports paper weights as follows:
  - 16 ~ 24 lbs (60 ~ 90 g/m^2) bond for the paper tray
  - 16 ~ 43 lbs (60 ~ 163 g/m^2) bond for the manual feeder
- Brightness: Some papers are whiter than others and produce sharper, more vibrant images.
- Surface smoothness: The smoothness of the paper affects how crisp the printing looks on the paper.

CAUTION: Using print materials that dose not conform to the specifications listed on page A.6 may cause problems that may require service. This service is not covered by the warranty or service agreements.

Type, Input Sources and Capacities

Paper Type	Input Source/Capacity*	
	Paper Tray	Manual Feeder
Plain paper	250	1
Envelopes	-	1
Labels**	-	1
Transparency films**	-	1
Card stocks**	-	1

* Maximum capacity may be reduced depending on the paper thickness.

** If you experience excessive jamming, load one sheet at a time through the manual feeder.

Guidelines for Paper and Special Materials

When selecting or loading paper, envelopes, or other special material, keep these guidelines in mind:

- Always use paper and other materials that conform with the specifications listed under "Paper Specifications" on page A.6.
- Attempting to print on damp, curled, wrinkled, or torn paper can cause paper jams and the poor print quality.
- Use only high quality copier grade paper for the best print quality.
- Avoid paper with embossed lettering, perforations, or a texture that is too smooth or too rough. Paper jams may occur.
- Store paper in its ream wrapper until you are ready to use. Place cartons on pallets or shelves, not on the floor. Do not place heavy objects on top of the paper, whether it is packaged or unpackaged. Keep it away from moisture, or other conditions that can cause it to wrinkle or curl.
- Store unused materials at temperatures between 15 °C and 30 °C (59 °F to 86 °F). The relative humidity should be between 10 % and 70 %.
- During storage, you should use moisture-proof wrap, such as any plastic container or bag, to prevent dust and moisture from contaminating your paper.
- Load special paper types one sheet at a time.
- Only use materials specifically recommended for use in laser printers.
- To prevent special materials, such as transparencies and label sheets from sticking together, remove them as they prints out.
- For envelopes:
  - Use only well-constructed envelopes with sharp, well creased folds.
  - Do not use envelopes with clasps and snaps.
  - Do not use envelopes with windows, coated lining, self-adhesive seals, or other synthetic materials.
  - Do not use damaged or poorly made envelopes.
- For transparencies:
  - Place them on a flat surface after removing them from the machine.
  - Do not leave them in the paper tray for long periods of time. Dust and dirt may accumulate on them resulting in spotty printing.

- To avoid smudging caused by fingerprints, handle them and coated paper carefully.
- To avoid fading, do not expose the printed transparencies to prolonged sunlight.

• For labels:
- Verify that their adhesive material can tolerate fusing temperature of 200 °C (392° F) for 0.1 second.
- Make sure that there is no exposed adhesive material between them. Exposed areas can cause labels to peel off during printing, which can cause paper jams. Exposed adhesive can also cause damage to machine components.
- Do not load a sheet of them through the machine more than once. The adhesive backing is designed for one pass through the machine.
- Do not use labels that are separating from the backing sheet or are wrinkled, bubbled, or otherwise damaged.

• Do not use **Carbonless** paper and **Tracing** paper. They could make smell of chemicals and damage your machine.

Selecting an Output Location

The machine has two output locations; the rear output slot (face up) and the front output tray (face down).

To use the front output tray, make sure that the rear cover is closed. To use the rear output slot, open the rear cover.

NOTES:
• If paper coming out of the front output tray has problems, such as excessive curl, try printing to the rear output slot.
• To avoid paper jams, do not open or close the rear cover while the machine is printing.

Printing to the Front Output Tray *(Face down)*

The front output tray collects printed paper face-down in correct order. The tray should be used for most print jobs.

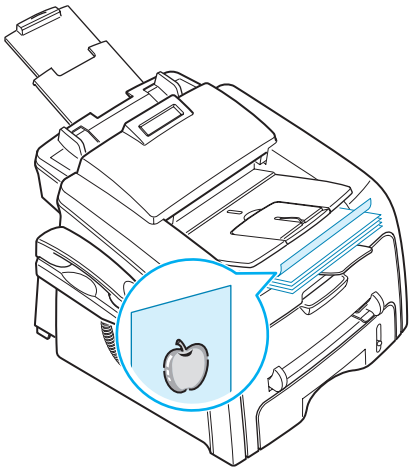

Printing to the Rear Output Slot *(Face up)*

Using the rear output slot, paper comes out of the machine face up.

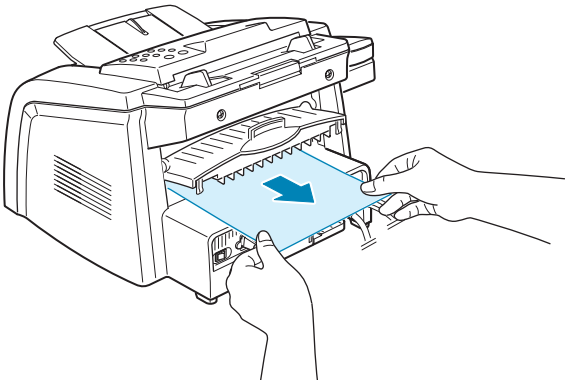

Printing from the manual feeder to the rear output slot provides the **straight paper path**. Using the rear output slot might improve the output quality with the following:

- envelopes
- labels
- small custom-sized paper
- postcards
- transparencies

To use the rear output slot:

1 Open the rear cover by pulling it upward.

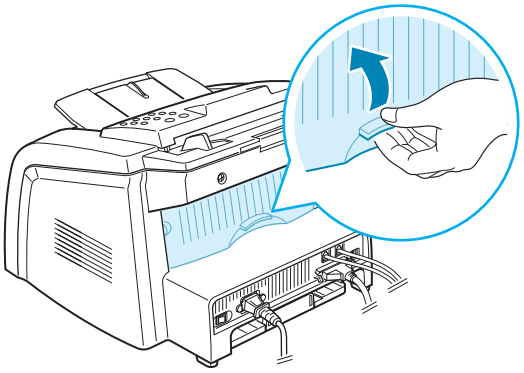

CAUTION: The fusing area inside the rear part of your machine becomes hot once the machine is turned on. Be careful when you access this area.
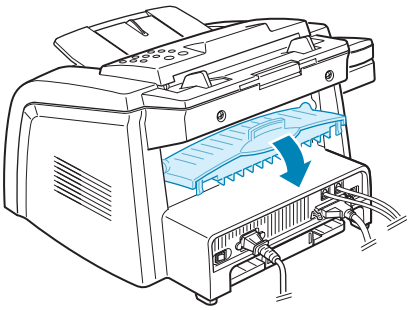
2 If you do not want to use the rear output slot, close the rear cover. The pages stack on the front output tray.