8 MAINTENANCE

This chapter provides information for maintaining your machine and the toner cartridge.

This chapter includes:

- **Clearing the Memory**
- **Adjusting Shading**
- **Cleaning Your Machine**
- **Maintaining the Toner Cartridge**
- **Consumables and Replacement Parts**
- **Replacing the ADF Rubber Pad**

Clearing the Memory

You can selectively clear information stored in your machine's memory.

1 Press **Menu** on the control panel until "Maintenance" appears on the top line of the display.

2 Press the scroll button (◄ or ►) until you see "Clear Memory" on the bottom line and press **Enter**

The first available menu item, "Clear All Mem." displays on the bottom line.

3 Press the scroll button (◄ or ►) until you see the item you want to clear.

- Clear All Mem.: Clears all of the data stored in the memory and resets all of your settings to the factory default.
- Paper Setting: Restores all of the Paper Setting options to the factory default.
- Copy Setup: Restores all of the Copy Setup options to the factory default.
- Fax Setup: Restores all of the Fax Setup options to the factory default.
- Fax Feature: Cancels all of the scheduled fax jobs in the machine's memory.
- Advanced Fax: Restores all of the Advanced Fax setting options to the factory default.
- Sound/Volume: Resets the sound and volume settings to the factory default.
- Machine Setup: Resets all of the system settings, such as the machine ID, date and time, display language and save modes, to the factory default.
- Sent Report: Clears all of records of your faxes sent.
- RCV Report: Clears all of records of your faxes received.
- Phone Book: Clears the one-touch, speed and group dial numbers stored in the memory.

4 Press **Enter**. The selected memory is cleared and the display asks you to continue clearing the next item.

5 To clear another item, press **Enter** and repeat steps 3 and 4

OR

To return to Standby mode, press **Stop/Clear**.

Adjusting Shading

When the scan unit becomes dirty, it can alter the shading value. If your copy has black lines or is blurred, adjust the shading setting.

1 Load a sheet of white paper into the ADF.

2 Press **Menu** on the control panel until "Maintenance" appears on the top line of the display.

3 Press the scroll button (◄ or ►) until "Adjust Shading " appears on the bottom line and press **Enter**.

4 Press the scroll button (◄ or ►) to select "On" and press **Enter**.

Your machine picks up the paper and adjusts the shading value.

Cleaning Your Machine

To maintain the print quality, follow the cleaning procedures below each time the toner cartridge is replaced or if print quality problems occur.

NOTE: While cleaning the inside of the machine, be careful not to touch the transfer roller, located underneath the toner cartridge. Oil from your fingers can cause print quality problems.

CAUTIONS: Cleaning the cabinet of the machine with surfactants containing large amounts of alcohol, solvent or other strong substances can discolor or crack the cabinet.

Cleaning the Outside

Clean the cabinet of the machine with a soft lint-free cloth. You can dampen the cloth slightly with water, but be careful not to be let any water drip onto the machine or inside of it.

Cleaning the Inside

During the printing process, paper, toner and dust particles can accumulate inside the machine. This buildup can cause print quality problems, such as toner specks or smearing. Cleaning the inside of the machine clears or reduces these problems.

1. Turn the machine off and unplug the power cord. Wait for the machine to cool down.

2. Open the front cover and pull the toner cartridge out, lightly pushing it down.

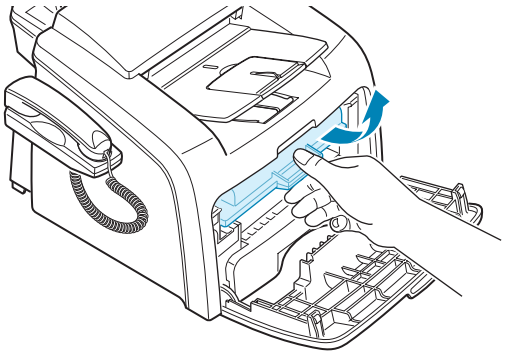

3. With a dry lint-free cloth, wipe away any dust and spilled toner from the toner cartridge area and the toner cartridge cavity.

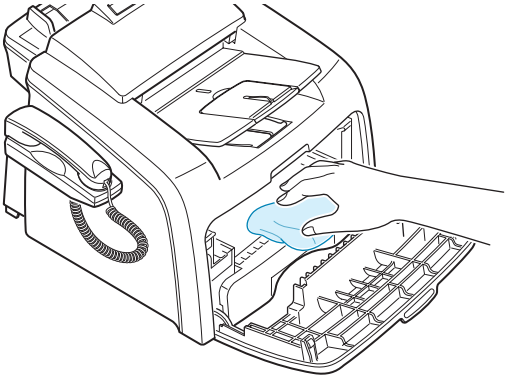

CAUTION: To prevent damage to the toner cartridge, do not expose it to light for more than a few minute. Cover it with a piece of paper, if necessary. Do not touch the black transfer roller inside the machine.

4 Reinsert the toner cartridge and close the cover.

5 Plug in the power cord and turn the machine on.

Cleaning the Scan Unit

Keeping the scan unit clean helps ensure the best possible copies. We suggest that you clean the scan unit at the start of each day and during the day, as needed.

1 Slightly dampen a soft lint-free cloth or paper towel with water.

2 Open the control panel by gripping its bottom and pulling it upward.

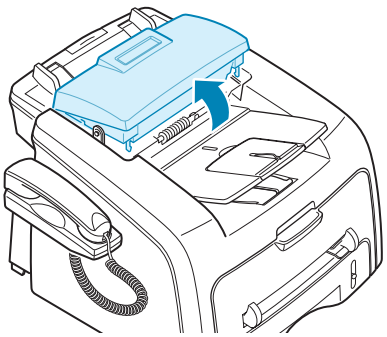

3 Disassemble the white roller as follows:

The right end of the white roller has a plastic bushing that is snapped shut with small tab on it. Pull the bushing slightly inward, then rotate the bushing until it reach a slot (①). Then pull the roller upward (②).

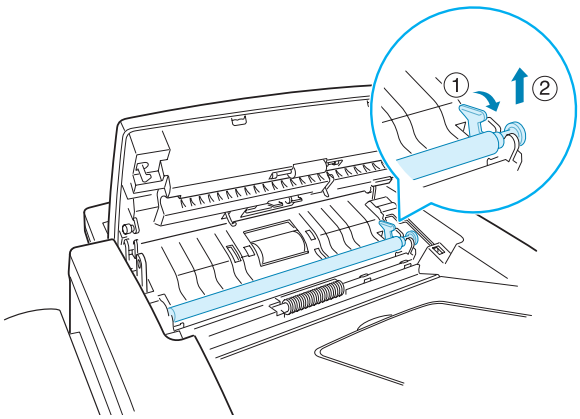

4 Wipe the roller surface with a soft cloth dampened with water.

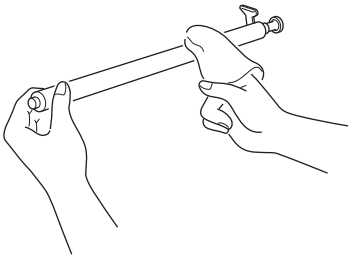

5 Carefully wipe the scanning glass with a soft dry cloth.

If the glass is very dirty, first wipe it with a slightly dampened cloth, and then with a dry cloth. Be very careful not to scratch the glass surface.

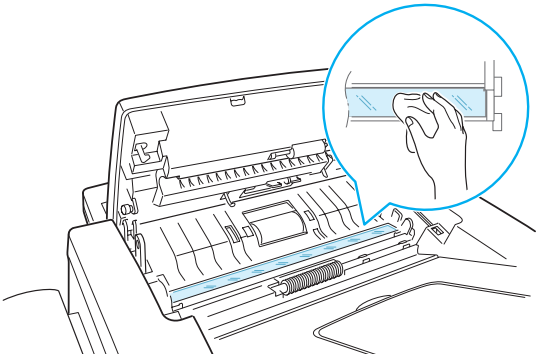

6 Replace the roller by inserting the left end first followed by the right end, then rotating the bushing until it locks into place.

7 Reconnect the support and the control panel and then close the control panel firmly until it clicks into place.

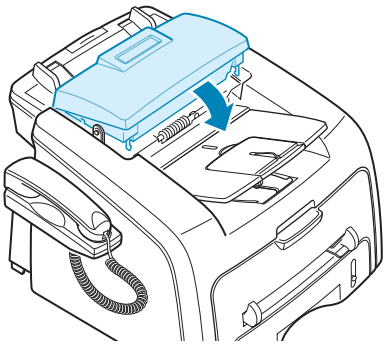

Maintaining the Toner Cartridge

Toner Cartridge Storage

To get the most from the toner cartridge, keep the following guidelines in mind:

- Do not remove the toner cartridge from its package until ready for use.
- Do not refill the toner cartridge. **The machine warranty does not cover damage caused by using a refilled cartridge.**
- Store toner cartridges in the same environment as your machine.
- To prevent damage to the toner cartridge, do not expose it to light for more than a few minute.

Saving Toner

To save toner, press the **Toner Save** button on the control panel; see page 1.39. The button backlight turns on. Using this feature extends the life of the toner cartridge and reduces your cost per page, but it also reduces the print quality.

Expected Cartridge Life

The life of the toner cartridge depends on the amount of toner that print jobs require. When printing text at IDC 5% coverage, a new toner cartridge lasts an average of 3,000 pages. The original toner cartridge supplied with the machine lasts an average of 1,000 pages. The actual number may be different depending on the print density of the page you print. If you print a lot of graphics, you may need to change the cartridge more often.

Redistributing Toner

When the toner cartridge is near the end of its life, white streaks or light print occurs. The LCD displays the warning message, “Toner Low.” You can temporarily reestablish the print quality by redistributing the remaining toner in the cartridge.

1 Open the front cover.

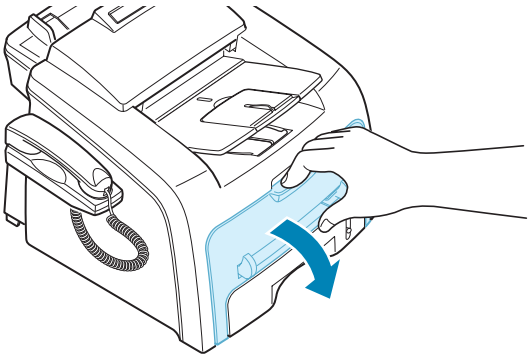

2 Pull the toner cartridge out and gently roll the cartridge 5 or 6 times to distribute the toner evenly inside the cartridge.

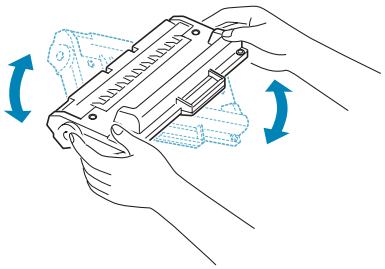

NOTE: If the toner gets on your clothing, wipe it off with a dry cloth and wash clothing in cold water. Hot water sets the toner into fabric.

3 Reinstall the cartridge and close the front cover.

Replacing the Toner Cartridge

When the toner eventually runs out, only blank pages print when a print job is sent or when a fax is received. At this stage, the toner cartridge needs to be replaced. The display on the control panel shows the warning message, "Toner Empty" and the machine stops printing.

NOTE: You can set the machine to ignore the "Toner Empty" message and continue printing. See page 8.11.

1 Open the front cover.

2 Lightly pushing the used cartridge down, pull it out.

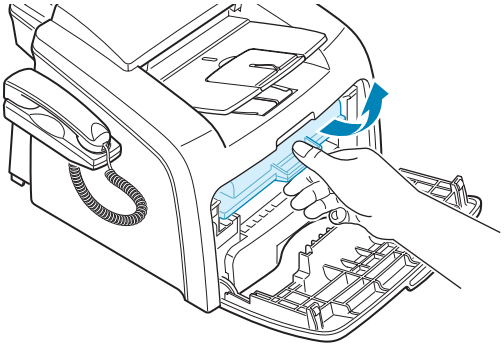

3 Unpack the new toner cartridge and gently roll it horizontally four or five times to distribute the toner evenly inside the cartridge.

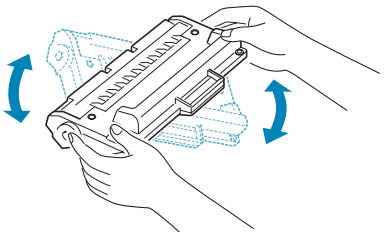

Save the box and the Plastic bag for shipping.

4 Slide the new toner cartridge in until it locks into place.

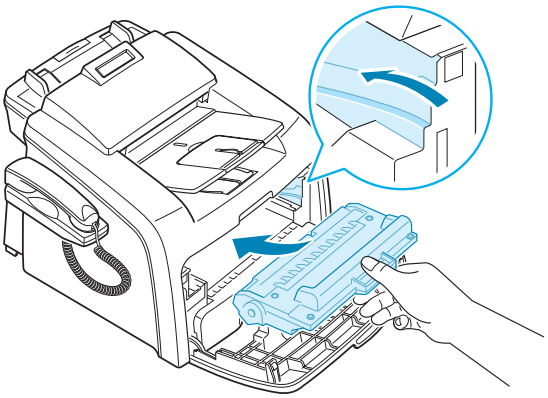

5 Close the front cover.

Setting the Notify Toner Option

If you have set the Notify Toner menu option to “On”, your machine automatically sends a fax to your service company or the dealer to notify them that your machine requires a new toner cartridge when the toner cartridge needs to be replaced. The fax number is preset by your dealer when you bought your machine.

1. Press **Menu** on the control panel until “Maintenance” appears on the top line of the display.

   The first available menu item, “Clean Drum,” displays on the bottom line.

2. Press the scroll button (◄ or ►) to display “Notify Toner ” on the bottom line and press **Enter**.

3. Press the scroll button (◄ or ►) to change the setting.

   Select “On” to enable this feature. Selecting “Off” disables this feature.

4. Press **Enter** to save the selection.

Cleaning the Drum

If there are streaks or spots on your print, the OPC drum of the cartridge may require cleaning.

1. Before setting the cleaning procedure, make sure that paper is loaded in the machine.

2. Press **Menu** on the control panel until "Maintenance" appears on the top line of the display.

   The first available menu item, "Clean Drum," displays on the bottom line.

3. Press **Enter**.

4. When the display asks you to confirm your selection, press **Enter**.

   The machine prints a cleaning page. Toner particles on the drum surface are affixed to the paper.

5. If the problem remains, repeat steps 1 through 4.

Ignoring the Toner Empty Message

When the toner cartridge is empty, the machine shows a "Toner Empty" message and stops printing.

You can set the machine to ignore the message when it displays and to continue printing the pages.

1. Press **Menu** until "Machine Setup" appears on the display.

2. Press the scroll button (◄ or ►) until "Ignore Toner Empty" appears on the bottom line and press **Enter**.

3. Press the Scroll button (◄ or ►) to select "On" or "Off."

   Select "On" to ignore the Toner Empty message.

   Select "Off" to stop printing when the message appears. This is the default setting.

4. Press **Enter** to save the selection.

Consumables and Replacement Parts

From time to time, you needs to replace the toner cartridge, roller, and fuser unit to maintain top performance and to avoid print quality problems and paper feed problems resulting from worn parts.

The following items should be replaced after you have printed a specified number of pages:

Items	Yield (Average)
ADF rubber pad	20,000
ADF roller	60,000
Paper feeding roller	60,000
Transfer roller	60,000
Fuser unit	60,000

To purchase the consumables and replacement parts, contact your Samsung dealer or the retailer where you bought your machine. We strongly recommend that items be installed by a trained service professional, except for the toner cartridge and the ADF rubber pad.

Replacing the ADF Rubber Pad

You can purchase a ADF rubber assembly from a Samsung dealer or the retailer where you bought your machine.

1 Open the control panel by gripping its bottom and pulling it upward.

2 Disconnect the support on the left side of the machine from the control panel and lift the control panel up to the complete open position.

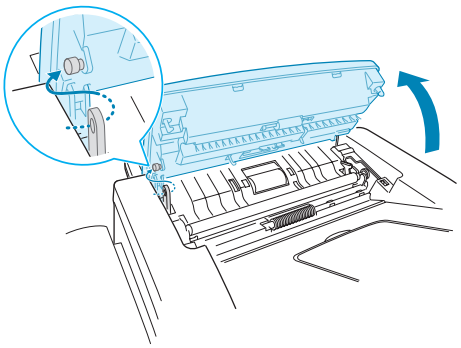

3 Remove the control panel from the machine by disconnecting the hinge on the right.

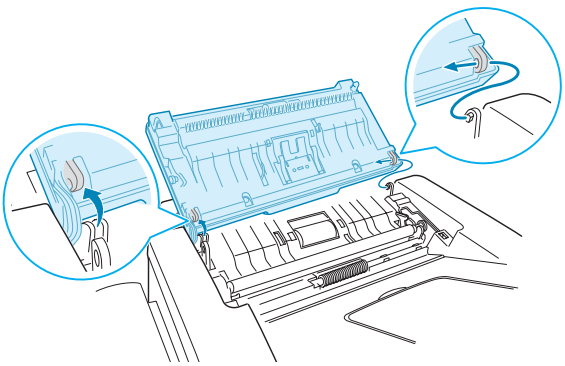

NOTE: Be careful not to disconnect the connector on the control panel from the machine as it turns the LCD off.

4 Using a screw driver, press the slots on the ADF rubber plate to unlatch the plate and the ADF rubber.

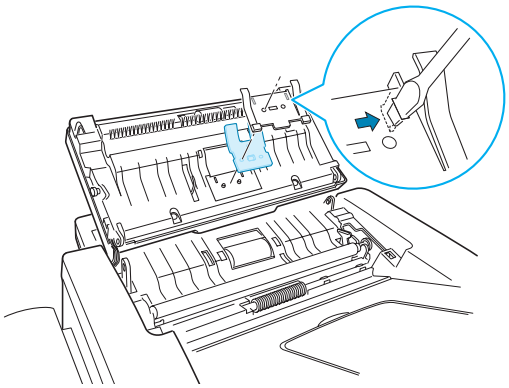

5 Align the holes on the new ADF rubber and the plate, and insert the tabs on the plate into the slot on the machine. Press them until they are lached.

6 Replace the control panel by connecting the hinge on the right first, then inserting the left arm while pushing the control panel to the right.

7 Reconnect the support and the control panel and then close the control panel firmly until it clicks into place.

9 TROUBLESHOOTING

This chapter gives helpful information for what to do if you encounter an error.

This chapter includes:

- **Clearing Document Jams**
- **Clearing Paper Jams**
- **Clearing LCD Error Messages**
- **Solving Problems**

Clearing Document Jams

When a document jams while it passes through the ADF (Automatic Document Feeder), "Document Jam" appears on the display.

Input Misfeed

1 Remove the remaining documents from the ADF.

2 Pull the jammed document gently out of the ADF.

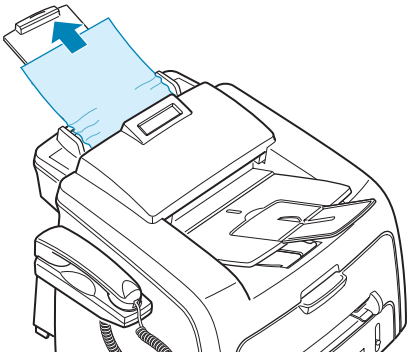

3 Load the documents back into the ADF.

NOTE: To prevent document jams, do not use thick, thin or mixed documents.

Exit Misfeed

1 Remove the remaining documents from the ADF.

2 Open the control panel by gripping its bottom and pulling it upward.

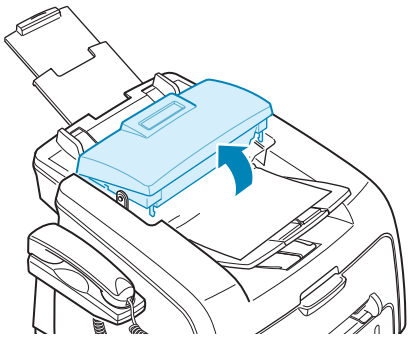

3 Pull the document gently out of the ADF.

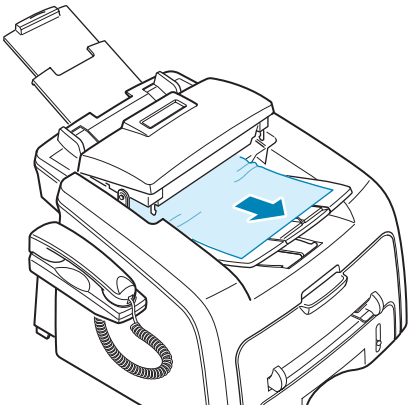

4 Close the control panel. Then load the documents back into the ADF.

Clearing Paper Jams

When a paper jam occurs, "Paper Jam" appears on the display. Refer to the table below to locate and clear the paper jam.

Message	Location of Jam	Go to
[Paper Jam 0] Open/Close Door	In the paper tray.	page 9.4
[Paper Jam 1] Open/Close Door	In the fuser area or around the toner cartridge.	page 9.5
[Paper Jam 2] Check Inside	In the paper exit area	page 9.4
[Bypass Jam]	In the manual feeder	page 9.6

To avoid tearing the paper, pull the jammed paper out gently and slowly. Follow the steps on the next pages to clear the jam.

In the Paper Tray

1 Open and close the front cover. The jammed paper automatically exits the machine.

If the paper does not exit, continue to step 2.

2 Pull the paper tray open.

3 Remove the jammed paper by gently pulling it straight out.

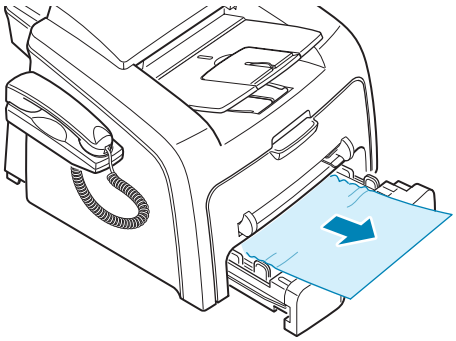

If there is any resistance and the paper does not move when you pull or if you cannot see the paper in this area, skip to the fuser area around the toner cartridge. See page 9.5.

4 Insert the paper tray into the machine until it snaps into place.

5 Open and close the front cover to resume printing.

In the Paper Exit Area

1 Open and close the front cover. The jammed paper automatically exits the machine.

If the paper does not exit, continue to step 2.

2 Gently pull the paper out of the front output tray. Skip to step 6.

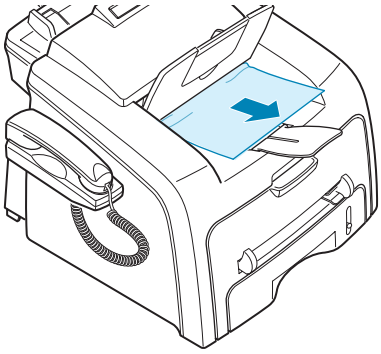

If there is any resistance and the paper does not move when you pull or if you cannot see the paper in the front output tray, continue to step 3.

3 Open the rear cover.

4 Remove the jammed paper by gently pulling it straight out.

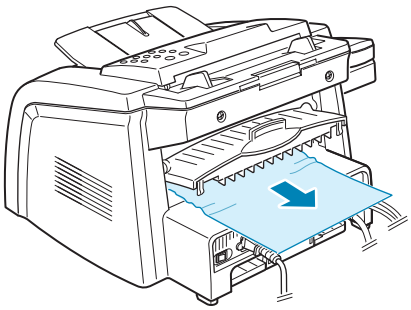

5 Close the rear cover.

6 Open and close the front cover to resume printing.

In the Fuser Area or Around the Toner Cartridge

NOTE: The fuser area is hot. Take care when removing paper from the machine.

1 Open the front cover and pull the toner cartridge out, lightly pushing it down.

2 Remove the jammed paper by gently pulling it straight out.

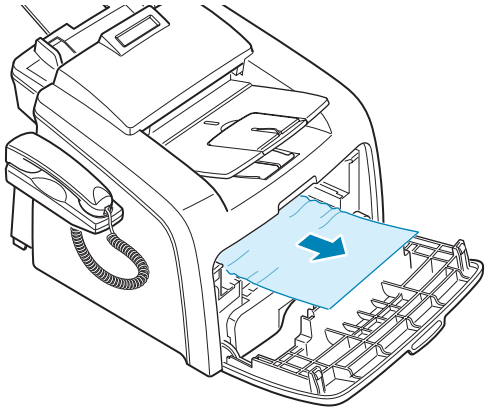

3 Replace the toner cartridge and close the front cover. Printing automatically resumes.

In the Manual Feeder

"Bypass Jam" appears on the display when you try to print using the manual feeder and the machine does not detect paper, due to no paper or improper paper loading.

The error message may also occur when the paper is not properly fed into the machine through the manual feeder. In that case, pull the paper out of the machine.

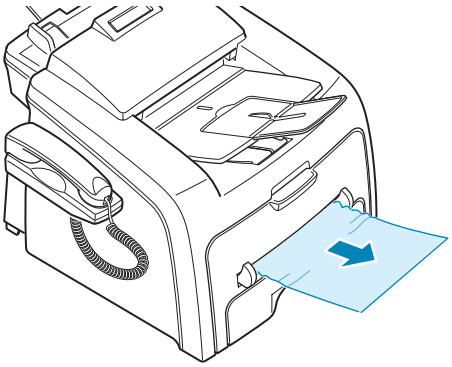

Tips for Avoiding Paper Jams

By selecting the correct paper types, most paper jams can be avoided. When a paper jam occurs, follow the steps outlined in page 9.3.

- Follow the procedures on page 1.12 when you load paper. Ensure that the adjustable guides are positioned correctly.
- Do not overload the paper tray. Ensure that the paper is below the paper capacity mark on the inside wall of the paper tray.
- Do not remove the paper from the tray while your machine is printing.
- Flex, fan and straighten the paper before loading.
- Do not use creased, damp or highly curled paper.
- Do not mix paper types in the paper tray.
- Use only recommended print materials. See "Paper Specifications" on page A.6.
- Ensure that the print side of print materials is facing down in the paper tray and facing up in the manual feeder.
- If paper jams frequently occur when you print on the A5-sized paper:

  - Load the paper into the tray as shown below.

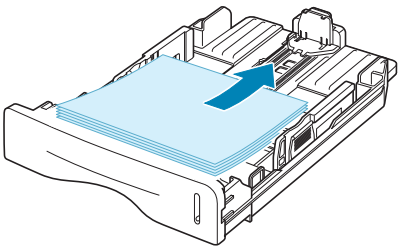

  - Set the page orientation to **Landscape** in the printer's Properties window. See page 3.3.

Clearing LCD Error Messages

Messages appears on the display to indicate the control panel to indicate the machine's status or errors. Refer to the following table to understand the message's meaning and correct the problem, if necessary. Messages and their meanings are listed in alphabetical order.

Display	Meaning	Suggested solutions
[Bypass Jam]	A paper jam has occurred in the manual feeder or the machine detects non-feeding from the manual feeder.	Clear the paper jam. See page 9.6. Load paper in the manual feeder.
Cancel ? 1:Yes 2:No	Your machine's memory is full during the machine stores the document into the memory.	To cancel the fax job, press the **1** button to accept "Yes." If you want to send the pages were stored, press the **2** button to accept "No." You should send the remaining pages later when the memory is available.
[COMM. Error]	The machine has a communication problem.	Ask the sender to try again.
CRU Fuse Error	The machine has a problem with recognizing the new toner cartridge.	Please contact a service representative.
Document Jam	The loaded document has jammed in the ADF (Automatic Document Feeder).	Clear the document jam. See page 9.2.
[Door Open]	The front or rear cover is not securely latched.	Close the cover until it locks into place.
Group Not Available	You have tried to select a group location number where only a single location number can be used, such as when adding locations for a broadcasting operation.	Just use a one-touch or speed dial number or dial a number manually using the number keypad.

Display	Meaning	Suggested solutions
[Incompatible]	The remote machine does not have the requested feature, such as a delayed transmission. It also occurs if the remote machine does not have enough memory space to complete the operation you are attempting.	Reconfirm the remote machine's features.
[Jam 1] [No Cartridge]	The toner cartridge is not installed.	Install the toner cartridge. See page 1.10.
Line Busy	The remote person did not answer or the line is already engaged.	Try again after a few minutes.
[Line Error]	Your machine cannot connect with the remote machine or has lost contact because of a problem with the phone line.	Try again. If the problem persists, wait an hour or so for the line to clear and try again. Or, turn the ECM on. See page 6.34.
Load Document	You have attempted to set up a copy or fax operation with no document loaded.	Load a document and try again.
[Low Heat Error] Open Heat Error [Over Heat]	There is a problem in the fuser unit.	Unplug the power cord and plug it back in. If the problem persists, please contact a service representative.
[LSU Error]	A problem has occurred in the LSU (Laser Scanning Unit).	Unplug the power cord and plug it back in. If the problem persists, please call for service.
Memory Full	The memory is full.	Delete unnecessary documents, retransmit after more memory becomes available or split the transmission into more than one operation.

Display	Meaning	Suggested solutions
[No Answer]	The remote fax machine has not answered after several redial attempts.	Try again. Make sure that the remote machine is operational.
NO. Not Assigned	The one-touch or speed dial location you tried to use has no number assigned to it.	Dial the number manually using the number keypad or assign the number. For storing a number, see "Automatic Dialing" on page 6.14.
[No Paper] Add Paper	The paper tray has run out of paper.	Load paper in the paper tray. See page 1.12.
Operation Not Assigned	You are doing in the Add/ Cancel operation, but there is no jobs waiting.	Check the display to see if there is any scheduled job. The display should indicate them in Standby mode, for example, Delay Fax.
[Paper Jam 0] Open/Close Door	Paper has jammed in the feeding area of the paper tray.	Clear the jam. See page 9.4.
[Paper Jam 1] Open/Close Door	Paper has jammed in the paper exit area.	Clear the jam. See page 9.5.
[aper Jam 2] Check Inside	Paper has jammed in the fuser area.	Clear the jam. See page 9.4.
Power Failure	Power has turned off then on and the machine's memory has not been saved.	You need to start again the job which you were trying to do before the power failure.
Retry Redial?	The machine is waiting for a specified time interval to redial a previously busy station.	You can press **Enter** to immediately redial, or **Stop/ Clear** to cancel the redial operation.
[Stop Pressed]	The **Stop/Clear** button is pressed during a copy or fax operation.	Try again.
[Toner Empty]	The toner cartridge has run out. The machine stops printing.	Replace with a new toner cartridge. See page 8.8.
[Toner Low]	The toner cartridge is almost empty.	Take out the toner cartridge and gently shake it. By doing this, you can temporarily reestablish printing operations.

Solving Problems

The following chart lists some conditions that may occur and the recommended solutions. Follow the suggested solutions until the problem is corrected. If the problem persists, please call for service.

Paper Feeding Problems

Condition	Suggested solutions
Paper is jammed during printing.	Clear the paper jam. See page 9.3.
Paper sticks together.	• Ensure that there is not too much paper in the paper tray. The paper tray can hold up to 250 sheets of paper, depending on the thickness of your paper. • Make sure that you are using the correct type of paper. See "Paper Specifications" on page A.6. • Remove paper from the paper tray and flex or fan the paper. • Humid conditions may cause some paper to stick together.
Multiple sheets of paper do not feed.	• Different types of paper may be stacked in the paper tray. Load the paper of only one type, size and weight. • If multiple sheets have caused a paper jam, clear the paper jam. See page 9.3.
Paper does not feed into the machine.	• Remove any obstructions inside the machine. • Paper has not been loaded correctly. Remove paper from the tray and reload it correctly. • There is too much paper in the paper tray. Remove excess paper from the tray. • The paper is too thick. Use only paper that meets the specifications required by the machine. See "Paper Specifications" on page A.6.
The paper keeps jamming.	• There is too much paper in the paper tray. Remove excess paper from the tray. • An incorrect type of paper is being used. Use only paper that meets the specifications required by the machine. See "Paper Specifications" on page A.6. If you are printing on special materials, use the manual feeder. • There may be debris inside the machine. Open the front cover and remove the debris.
Transparencies stick together in the paper exit.	Use only the transparencies specifically designed for a laser printer. Remove each transparency as it exits from the machine.
Envelopes skew or fail to feed correctly.	Ensure that the paper guides are against both sides of the envelopes.

Printing Problems

Condition	Possible cause	Suggested solutions
The machine does not print.	The machine is not receiving power.	Check the power cord connections. Check the power switch and the power source.
	The machine is not selected as the default printer.	Select **Samsung MFP 560 Series** as your default printer in your Windows.
	Check the machine for the following: • The front or rear cover is not closed. • Paper is jammed. • No paper is loaded. • The toner cartridge is not installed.	After locating the problem, clear it. • Close the cover. • Clear the paper jam. See page 9.3. • Load paper. See page 1.12. • Install the toner cartridge. See page 1.10. If a printer system error occurs, contact your service representative.
	The connection cable between the computer and the machine is not connected properly.	Disconnect the printer cable and reconnect it.
	The connection cable between the computer and the machine is defective.	If possible, attach the cable to another computer that is working properly and print a document. You can also try using a different printer cable.
	The port setting is incorrect.	Check the Windows printer setting to make sure that the print job is sent to the correct port, for example, LPT1. If the computer has more than one port, make sure that the machine is attached to the correct one.
	The machine may be configured incorrectly.	Check the printer properties to ensure that all of the print settings are correct.
	The printer driver may be incorrectly installed.	Remove the printer driver and then reinstall it; see page 1.21 and page 1.21 respectively.
	The machine is malfunctioning.	Check the display message on the control panel to see if the machine is indicating a system error.

Condition	Possible cause	Suggested solutions
The machine selects print materials from the wrong paper source.	The paper source selection in the printer properties may be incorrect.	For many software applications, the paper source selection is found under the **Paper** tab within the printer properties. Select the correct paper source. See page 3.8.
A print job is extremely slow.	The job may be very complex.	Reduce the complexity of the page or try adjusting the print quality settings. The maximum print speed of your machine is 17 PPM for Letter-sized paper 16 PPM for A4-sized paper.
	If you are using Windows 9x/Me, the Spooling Setting may be set incorrectly.	From the **Start** menu, choose **Settings** and **Printers**. Right-click the **Samsung MFP 560 Series** printer icon, choose **Properties**, click the **Details** tab, and then choose the **Spool Settings** button. Select the spool setting you want.
Half the page is blank.	The page orientation setting may be incorrect.	Change the page orientation in your application. See page 3.3.
	The paper size and the paper size settings do not match.	Ensure that the paper size in the printer driver settings matches the paper in the tray.
The machine prints, but the text is wrong, garbled, or incomplete.	The printer cable is loose or defective.	Disconnect the printer cable and reconnect. Try a print job that you have already printed successfully. If possible, attach the cable and the machine to another computer and try a print job that you know works. Finally, try a new printer cable.
	The wrong printer driver was selected.	Check the application's printer selection menu to ensure that your machine is selected.
	The software application is malfunctioning.	Try printing a job from another application.
	The operating system is malfunctioning.	Exit Windows and reboot the computer. Turn the machine off and then back on again.

Condition	Possible cause	Suggested solutions
Pages print, but are blank.	The toner cartridge is defective or out of toner.	Redistribute the toner. if necessary. See page 8.7. If necessary, replace the toner cartridge.
	The file may have blank pages.	Check the file to ensure that it does not contain blank pages.
	Some parts, such as the controller or the board, may be defective.	Contact a service representative.
The illustrations print incorrectly in Adobe Illustrator.	The setting in the software application is wrong.	Select **Download as Bit Image** in the **Advanced Options** window of the Graphic properties and print the document.
An error occurs repeatedly when you are printing with the USB connection.	When the USB mode is set to "Fast," some PC users may experience poor USB communication.	Change the USB mode to "Slow." To do so, follow these steps: 1. Press **Menu** on the control panel until "Machine Setup" appears on the top line of the display. 2. Press the scroll button (◄ or ►) until "USB Mode" appears on the bottom line, and press **Enter**. 3. Press the scroll button (◄ or ►) to select "Slow." 4. Press **Enter** to save the selection. 5. Press **Stop/Clear** to return to Standby Mode.

Printing Quality Problems

The dirty inside of the machine or improper paper loading may reduce the print quality. See the table below to clear the problem.

Condition	Suggested solutions
Light or faded print 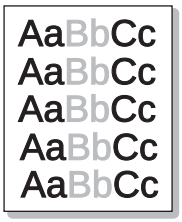 	If a vertical white streak or faded area appears on the page: • The toner supply is low. You may be able to temporarily extend the toner cartridge life. See "Redistributing Toner" on page 8.7. If this does not improve the print quality, install a new toner cartridge. • The paper may not meet paper specifications; for example, the paper is too moist or too rough. See "Paper Specifications" on page A.6. • If the entire page is light, the print resolution setting is too low or Toner Save mode is on. Adjust the print resolution and turn Toner Save mode off. See page 3.8 and page 1.39 respectively. • A combination of faded or smeared defects may indicate that the toner cartridge needs cleaning. See "Cleaning the Drum" on page 8.11. • The surface of the scan unit may be dirty. Clean the scan unit. See page 8.5.
Toner specs 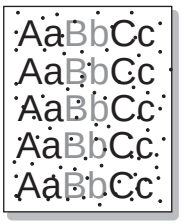 	• The paper may not meet specifications; for example, the paper is too moist or too rough. See "Paper Specifications" on page A.6. • The transfer roller or paper path may be dirty. Clean the inside of your machine and the drum. See page 8.4 and page 8.11.
Dropouts 	If generally rounded faded areas, occur randomly on the page: • A single sheet of paper may be defective. Try reprinting the job. • The moisture content of the paper is uneven or the paper has moist spots on its surface. Try a different brand of paper. See "Paper Specifications" on page A.6. • The paper lot is bad. The manufacturing process can cause some areas to reject toner. Try a different kind or brand of paper. • The toner cartridge may be defective. Vertical repetitive defects on the next page. • If these steps do not correct the problems, contact a service representative.

Condition	Suggested solutions
Vertical lines 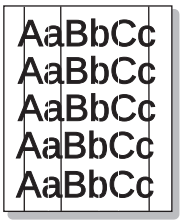	If black vertical streaks appear on the page: • The drum inside the toner cartridge has probably been scratched. Remove the toner cartridge and install a new one. See "Replacing the Toner Cartridge" on page 8.8.
Gray background 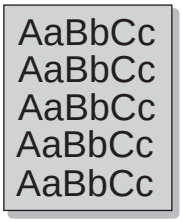	If the amount of background shading becomes unacceptable: • Change to a lighter weight pages. See "Paper Specifications" on page A.6. • Check the machine's environment; very dry (low humidity) or high humidity (higher than 80% RH) conditions can increase the amount of background shading. • Remove the old toner cartridge and install a new one. See "Replacing the Toner Cartridge" on page 8.8.
Toner smear 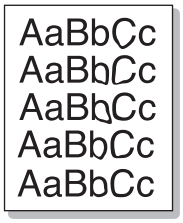	• Clean the inside of the machine. See page 8.4. • Check the paper type and quality. See "Paper Specifications" on page A.6. • Remove the toner cartridge and install a new one. See "Replacing the Toner Cartridge" on page 8.8.
Vertical repetitive defects 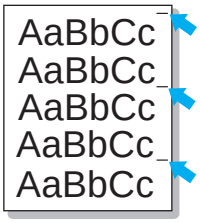	If marks repeatedly appear on the printed side of the page at even intervals: • The toner cartridge may be damaged. If a repetitive mark occurs on the page, print a cleaning sheet several times to clean the cartridge; see "Cleaning the Drum" on page 8.11. After the printout, if you still have the same problems, remove the toner cartridge and install a new one. See "Replacing the Toner Cartridge" on page 8.8. • Parts of the machine may have toner on them. If the defects occur on the back of the page, the problem will likely correct itself after a few more pages. • The fusing assembly may be damaged. Contact a service representative.

Condition	Suggested solutions
Background scatter 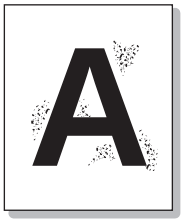	Background scatter results from bits of toner distributed on the printed page. • The paper may be too damp. Try printing with a different batch of paper. Do not open packages of paper until necessary so that the paper does not absorb too much moisture. • If background scatter occurs on an envelope, change the printing layout to avoid printing over areas that have overlapping seams on the reverse side. Printing on seams can cause problems. • If background scatter covers the entire surface area of a printed page, adjust the print resolution through your software application or the printer properties.
Misformed characters 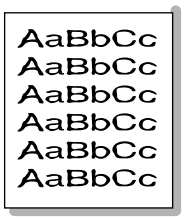	• If characters are improperly formed and producing hollow images, the paper stock may be too slick. Try a different paper. See "Paper Specifications" on page A.6. • If characters are improperly formed and producing a wavy effect, the scanner unit may need service. For service, contact a service representative.
Page skew 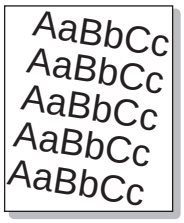	• Ensure that the paper is loaded properly. • Check the paper type and quality. See "Paper Specifications" on page A.6. • Ensure that the paper or other material is loaded correctly and the guides are not too tight or too loose against the paper stack.
Curl or wave 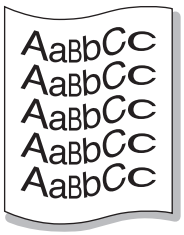	• Ensure that the paper is loaded properly. • Check the paper type and quality. Both high temperature and humidity can cause paper curl. See "Paper Specifications" on page A.6. • Turn the stack of paper over in the paper tray. Also try rotating the paper 180° in the tray. • Try printing to the rear output slot.

Condition	Suggested solutions
Wrinkles or creases	• Ensure that the paper is loaded properly. • Check the paper type and quality. See "Paper Specifications" on page A.6. • Turn the stack of paper over in the paper tray. Also try rotating the paper 180° in the tray. • Try printing to the rear output slot.
Back of printouts are dirty	Check for leaking toner. Clean the inside of the machine. See page 8.4.
Black pages	• The toner cartridge may not be installed properly. Remove the cartridge and reinsert. • The toner cartridge may be defective and need replacing. Remove the toner cartridge and install a new one. See "Replacing the Toner Cartridge" on page 8.8. • The machine may require repair. Contact a service representative.
Loose toner	• Clean the inside of the machine. See page 8.4. • Check the paper type and quality. See "Paper Specifications" on page A.6. • Remove the toner cartridge and install a new one. See "Replacing the Toner Cartridge" on page 8.8. • If the problem persists, the machine may require repair. Contact a service representative.

Condition	Suggested solutions
Character Voids	Character voids are white areas within the parts of characters that should be solid black: • If you are using transparencies, try another type of transparency. Due to the composition of the transparency, some character voids are normal. • You may be printing on the wrong surface on the paper. Remove the paper and turn it around. • The paper may not meet paper specifications. See "Paper Specifications" on page A.6.
Horizontal stripes 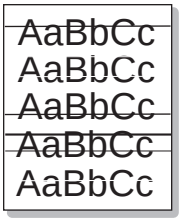	If horizontally aligned black streaks or smears appear: • The toner cartridge may be installed improperly. Remove and reinsert the cartridge. • The toner cartridge may be defective. Remove the toner cartridge and install a new one. See "Replacing the Toner Cartridge" on page 8.8. • If the problem persists, the machine may require repair. Contact a service representative.
Curl 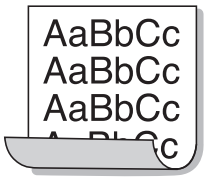	If the printed paper is curl or paper does not feed into the printer: • Turn the stack of paper over in the paper tray. Also try rotating the paper 180° in the paper tray. • Try printing to the rear output slot.

Copying Problems

Condition	Suggested solutions
Copies are too light or too dark.	Use the **Darkness** button to darken or lighten the background of the copies.
Smears, lines, marks or spots appears on copies.	• If defects are on the original document, press the **Darkness** button to lighten the background of your copies. • If no defects are on the original document, clean the Scan unit. See page 8.5.
Copy image is skewed.	• Ensure that the original document is positioned correctly in the ADF (Automatic Document Feeder). • Check that the copy paper is loaded correctly.
Blank copies print out.	Ensure that the original document is face down in the ADF.

Condition	Suggested solutions
Image rubs off the copy easily.	• Replace the paper in the paper tray with paper from a new package. • In high humidity areas, do not leave paper in the machine for the extended periods of time.
Frequent copy paper jams occurs.	• Fan the stack of paper, then turn it over in the paper tray. Replace the paper in the tray with a fresh supply. Check/adjust the paper guides, if necessary. • Ensure that the paper is the proper paper weight. 75g/m^2 (20 lb) bond paper is recommended. • Check for copy paper or pieces of copy paper remaining in the machine after a paper jam has been cleared.
Fewer copies from the toner cartridge than expected prints out.	• Your original documents may contain pictures, solids or heavy lines. For example, they may be forms, newsletters, books or other documents that use more toner. • The machine may be turned frequently on and off.

Scanning Problems

Condition	Suggested solutions
The scanner does not work.	• Make sure that you place the document to be scanned face down in the ADF. • There may not be enough available memory to hold the document you want to scan. Try the Prescan function to see if that works. Try lowering the scan resolution rate. • Check that the USB or parallel cable is connected properly. • Make sure that the USB or parallel cable is not defective. Switch the cable with a known good cable. If necessary, replace the cable. • If you are using a parallel cable, ensure that it is compliant with the IEEE 1284 standard. • Check that the scanner is configured correctly. Check scan setting in the SmarThru Configuration or the application you want to use to make certain that the scanner job is being sent to the correct port, for example, LPT1.

Condition	Suggested solutions
The unit scans very slowly.	• Check if the machine is printing received data. Scan the document after the current job is completed. • Graphics are scanned more slowly than text. • Communication speed becomes slow in scan mode because of the large amount of memory required to analyze and reproduce the scanned image. Set your computer to the ECP printer mode through BIOS setting. It will help to increase the speed. For details about how to set BIOS, refer to your computer user's guide.
Message appears on your computer screen: • "Device can't be set to the H/W mode you want." • "Port is being used by another program." • "Port is Disabled." • "Scanner is busy receiving or printing data. When the current job is completed, try again." • "Invalid handle." • "Scanning has failed."	• There may be a copying or printing job in progress. When the current job is complete, try the job again. • The selected port is currently being used. Restart your computer and try again. • The printer cable may be improperly connected or the power may be off. You must use a USB 1.1 compliant cable or a parallel cable that supports IEEE-1284 bi-directional communications. • The scanner driver is not installed or an operating environment is not set up properly. • Ensure that port is properly connected and power is on, and then restart your computer. • Do not use the parallel and the USB cables at the same time.

Faxing Problems

Condition	Suggested solutions
The machine is not working, there is no display and the buttons are not working.	• Unplug the power cord and plug it in again. • Ensure that there is power to the electrical receptacle.
No dial tone sounds.	• Check that the phone line is connected properly. • Check that the phone socket in the wall is working by plugging in another phone.
The numbers stored in the memory do not dial correctly.	Make sure that the numbers are stored in the memory correctly. Print a Phonebook list, referring to page page 6.20.

Condition	Suggested solutions
The document does not feed into the machine.	• Make sure that the document is not wrinkled and you are putting it in correctly. Check that the document is the right size, not too thick or thin. • Make sure that the control panel is firmly closed.
Faxes are not received automatically.	• Fax mode should be selected. • Make sure that there is paper in the tray. • Check to see if the display shows "Memory Full."
The machine does not send.	• Make sure that the document is loaded in the ADF. • "TX" should show up on the display. • Check the other fax machine you are sending to, to see if it can receive your fax.
The incoming fax has blank spaces or is received with a poor-quality.	• The fax machine sending you the fax may be faulty. • A noisy phone line can cause line errors. • Check your machine by making a copy. • The toner cartridge may be empty. Replace the toner cartridge, referring to page 8.8.
Some of the words on a incoming fax are stretched.	The fax machine sending you the fax had a temporary document jam.
There are lines on the documents you send.	Check your scan unit for marks and clean it. See page 8.5.
The machine dials a number, but a connection with another fax machine fails.	The other fax machine may be turned off, out of paper, or cannot answer incoming calls. Speak with the other machine operator and ask her/him to clear out the problem.
Documents are not stored in the memory.	There may not be enough memory to store the document. If the display shows a "Memory Full" message, delete any documents you no longer need from the memory and then restore the document.
Blank areas appear at the bottom of each page or on other pages, with a small strip of text at the top.	You may have chosen the wrong paper settings in the user option setting. See page 1.37.

Common Macintosh Problems

Problems in the Chooser

Problem	Possible Cause and Solution
The printer driver icon does not appear in Chooser.	• Software is not installed correctly. Reinstall the software; see page 7.2. • Make sure that you are using a high-quality cable.
The printer name does not appear in the **Connect to** box in Chooser.	• Make sure that the cables are connected correctly and the printer is turned on. • Check if "Ready" appears on the display of the control panel. If not, clear the problem depending on the error message; see page 9.8. • Make sure that the correct printer driver has been selected in Chooser.
You cannot use the computer while the printer is printing.	Background Printing has not been selected. • Select **Background** in the **Background Printing** tab of the Samsung SPL II Printer window. • In Mac OS 10.x, background printing is not supported.

Printer Errors

Problem	Possible Cause and Solution
You cannot use the computer while the priter is printing	Background Printing has not been selected. • Select Background in the printer's properties. See page 7.11 (Mac OS 10.X is not supported.)

Common Linux Problems

Problem	Possible Cause and Solution
The machine doesn't print	• Check if the printer driver is installed in your system. Open MFP Configurator and switch to the Printers tab in Printers Configuration window to look at the list of available printers. Make sure that your machine is displayed on the list. If not, please, invoke Add new printer wizard to set up your device. • Check if the printer is started. Open Printers configuration and select your device on the printers list. Look at the description in the Selected printer pane. If its status contains "(stopped)" string, please, press the Start button. After that normal operation of the printer should be restored. The "stopped" status might be activated when some problems in printing occurred. For instance, this could be an attempt to print document when MFP port is claimed by a scanning application. • Check if the MFP port is not busy. Since functional components of MFP (printer and scanner) share the same I/O interface (MFP port), the situation of simultaneous access of different "consumer" application to the same MFP port is possible. To avoid possible conflicts, only one of them at a time is allowed to gain control over the device. The other "consumer" will encounter "device busy" response. You should open MFP ports configuration and select the port assigned to your printer. In the Selected port pane you can see if the port is occupied by some other application. If this is the case, you should wait for completion of the current job or should press Release port button, if you are sure that the present owner is not functioning properly.
The machine does not appear on the scanners list	• Check if your machine is attached to your computer. Make sure that it is connected properly via the parallel or USB port and is turned on. • Check if the scanner driver for you machine is installed in your system. Open MFP Configurator, switch to Scanners Configuration, then press **Drivers**. Make sure that driver with a name corresponding to your machine's name is listed in the window.

Problem	Possible Cause and Solution
The machine does not appear on the scanners list (continued)	• Check if the MFP port is not busy. Since functional components of MFP (printer and scanner) share the same I/O interface (MFP port), the situation of simultaneous access of different "consumer" application to the same MFP port is possible. To avoid possible conflicts, only one of them at a time is allowed to gain control over the device. The other "consumer" will encounter "device busy" response. This can usually happen while starting scan procedure, and appropriate message box displays. To identify the source of the problem, you should open MFP ports configuration and select the port assigned to your scanner. MFP port's symbol /dev/mfp0 corresponds to LP:0 designation displayed in the scanners' options, /dev/mfp1 relates to LP:1 and so on. USB ports start at /dev/mfp4, so scanner on USB:0 relates to /dev/mfp4 respectively and so forth sequentially. In the Selected port pane you can see if the port is occupied by some other application. If this is the case, you should wait for completion of the current job or should press Release port button, if you are sure that the present port's owner is not functioning properly.
The machine doesn't scan	• Check if a document is loaded into the machine. • Check if your machine is connected to the computer. Make sure if it is connected properly if I/O error is reported while scanning. • Check if MFP port is not busy. Since functional components of MFP (printer and scanner) share the same I/O interface (MFP port), the situation of simultaneous access of different "consumer" application to the same MFP port is possible. To avoid possible conflicts, only one of them at a time is allowed to gain control over the device. The other "consumer" will encounter "device busy" response. This can usually happen while starting scan procedure, and appropriate message box will be displayed. To identify the source of the problem, you should open MFP ports configuration and select the port assigned to your scanner. MFP port's symbol /dev/mfp0 corresponds to LP:0 designation displayed in the scanners' options, /dev/mfp1 relates to LP:1 and so on. USB ports start at /dev/mfp4, so scanner on USB:0 relates to /dev/mfp4 respectively and so forth sequentially. In the Selected port pane you can see if the port is occupied by some other application. If this is the case, you should wait for completion of the current job or should press Release port button, if you are sure that the present port's owner is not functioning properly.

MEMO

A SPECIFICATIONS

This chapter includes:

- **General Specifications**
- **Scanner and Copier Specifications**
- **Printer Specifications**
- **Facsimile Specifications**
- **Paper Specifications**

General Specifications

Item	Description
Automatic document feeder (ADF)	Up to 20 sheets (weight:47~90g/m^2, 12.5~24lb)
ADF Document size	Width: 142 to 216 mm (5.6 to 8.5 inches) Length: 148 to 356 mm (5.8 to 14 inches)
Paper input capacity	Paper tray: 250 sheets (weight: 75 g/m^2, 20 lb) Manual feeder: 1 sheets (weight: 75 g/m^2, 20 lb)
Paper output capacity	Front output tray: 150 sheets (face down) Rear output slot: 1 sheet (face up)
Paper type	Paper tray: Plain paper (60 ~ 90 g/m^2, 16 ~ 24 lb) Manual feeder: Plain paper, Transparencies, Labels, Card stock, Thick, Thin, Bond, Preprinted, Colored, Envelopes (60 ~ 163 g/m^2, 16 ~ 43 lb)
Consumables	1-piece toner cartridge system
Power requirements	100 ~ 127 VAC, 50/60 Hz, 4.0 A 220 ~ 240 VAC, 50/60 Hz, 2.5 A
Power consumption	Sleep mode: 10W(100 ~ 127 VAC) / 12W(220 ~ 240 VAC) Standby mode: 85 W(100 ~ 127 VAC) / 95 W(220 ~ 240 VAC) Average: 300 W
Noise	Warm-up: 52 dB Standby mode: 39 dB Scanning: 52 dB Printing: 52 dB
Warm-up Time	35 seconds
Operating conditions	Temperature: 50 °F to 89 °F (10 °C to 32 °C) Humidity: 20 % to 80 % RH
LCD	16 characters x 2 lines
Toner cartridge life	3,000 pages (for starter, 1,000 pages) @ IDC 5 % coverage
SET dimension (W x D x H)	363.0 x 398.5 x 308.3 mm (without the handset)

Item	Description
Weight	Net: 9 Kg (including consumables) Gross: 9.7 Kg (including consumables, accessories and package)
Package Weight	Paper: 2.7 Kg Plastic: 0.7 Kg

Scanner and Copier Specifications

Item	Description
Compatibility	TWAIN standard
Scan method	CIS, Mono
Scan resolution	200 X 200 dpi (optical)
Scan length	Maximum: 15.7 inches (400 mm)
Scan width	Maximum: 8.5 inches (216 mm) Effective: 8.2 inches (208 mm)
Mono bit depth	1 bit for Text mode 8 bit for Gray mode
Copy speed	Letter: 17 copies per minute A4: 16 copies per minute
Copy resolution	300 x 300 dpi
Zoom rate	50 ~ 200 %
Multiple copies	99 pages
Halftone	256 levels

Printer Specifications

Item	Description
Print method	Laser Beam Printing
Print speed	Letter: 17 pages per minute A4: 16 pages per minute
Paper size	Paper tray: Letter, A4, Legal, Folio, A5, A6 Manual feeder: Letter, Legal, A4, Folio, Executive, A5, A6, A6 card, Post Card 4x6, Hagaki, Envelope 7-3/4, Envelope 9, Envelope 10, Envelope DL, Envelope C5, Envelope C6, Envelope B5 * Min.: 76 x 127 mm (3 x 5 in.) Max.: 216 x 356 (8.5 x 14 in.)
Print resolution	600 x 600 dpi
Emulation	SPL (GDI)
PC Interface	IEEE 1284 (ECP Only), USB 1.1
Compatibility	Windows 95/98/2000/NT 4.0/Me/XP Macintosh 8.6 or later Linux: • Redhat 7.1 and above • Linux Mandrake 8.0 and above • SuSE 7.1 and above • Caldera OpenLinux 3.1 and above • Turbo Linux 7.0 and above • Slackware 8.1 and above
Memory	4MB
First printing time	Standby mode: 12 seconds Power save mode: 47 seconds

Facsimile Specifications

Item	Description
Compatibility	ITU-T Group 3
Applicable line	Public Switched Telephone Network (PSTN) or behind PABX
Data coding	MH/MR/MMR (ECM Mode)
Modem speed	33600/31200/28800/26400/24000/21600/19200/16800/14400/12000/9600/7200/4800/2400 bps with fall back
Transmission speed	Approx. 3 seconds/page * Transmission time applies to memory transmission of text data with ECM compression using only ITU-T No.1 Chart.
Scan speed	Approx. 6 seconds/LTR (at standard fax resolution mode)
Paper size	Letter, A4, Legal
Resolution	Standard: 203 x 98 dpi Fine: 203 x 196 dpi Super Fine: 203 x 392 dpi Photo: 203 x 196 dpi
User Memory	2 MB
Halftone	256 levels
Auto dialer	One-touch dialing (up to 20 numbers) Speed dialing (up to 80 numbers)

Paper Specifications

Overview

Your machine accepts a variety of print materials, such as cut-sheet paper, including up to 100% recycled fiber content paper, envelopes, labels, transparencies and custom-size paper. Properties, such as weight, composition, grain and moisture content, are important factors affecting the machine's performance and the output quality. Paper that does not meet the guidelines outlined in this user's guide can cause the following problems:

- Poor print quality
- Increased paper jams
- Premature wear on the machine.

NOTES:
- Some paper may meet all of the guidelines in this guide and still not produce satisfactory results. This may be the result of improper handling, unacceptable temperature and humidity levels, or other variables over which Samsung has no control.
- Before purchasing large quantities of paper, insure the paper meets the requirements specified in this user's guide.

CAUTION: Using paper that does not meet these specifications may cause problems, requiring repairs. These repairs are not covered by the Samsung warranty or service agreements.

Supported Sizes of Paper

Size (mm/in.)	Weight	Capacity*
Plain paper Letter (215.9 x 279/8.5 x 11) A4 (210 x 297/8.27 x 11.69) Folio (215.9 x 330.2/8.5 x 13) Legal (215.9 x 355.6/8.5 x 14) Executive (184.2 x 266.7/7.25 x 10.5) A5 (148 x 210/5.83 x 8.27) A6 (105 x 148/4.13 x 5.88)	• 60 to 90 g/m^2 bond (16 to 24 lb) for the paper tray • 60 to 163 g/m^2 bond (16 to 43 lb) for the manual feeder	• 250 sheets of 75 g/m^2 bond (20 lb) paper for the paper tray • 1 sheet of paper for the manual feeder
Envelopes No.9 (98.4 x 225.4/3.88 x 8.88) No.10 (104.8 x 241.3/4.13 x 9.5) DL (110 x 220/4.33 x 8.66) C5 (162 x 229/6.38 x 9.02) C6 (114 x 162/4.49 x 6.38) B5 (176 x 250/6.93 x 9.84) No.7 3/4 (98.4 x 190.5/3.88 x 7.5)	75 to 90 g/m^2	1 sheet of paper for the manual feeder

Size (mm/in.)	Weight	Capacity*
Labels Letter (215.9 x 279/8.5 x 11) A4 (210 x 297/8.27 x 11.69)	120 to 150 g/m^2	1 sheet of paper for the manual feeder
Transparency films Letter (215.9 x 279/8.5 x 11) A4 (210 x 297/8.27 x 11.69)	138 to 146 g/m^2	
Card stocks A6 card (105 x 148/4.13 x 5.88) Post Card (101.6 x 152.4/4 x 6) Hagaki (100 x 148/3.94 x 5.83)	90 to 163 g/m^2	
Minimum size (custom)	60 to 120 g/m^2 bond (16 to 32 lb)	
Maximum size (Legal)		

*** Capacity may vary depending on print materials' weight and thickness, and environmental conditions.**

NOTE: You may experience jams when using print materials with a length of less than 127 mm (5 in.). For optimum performance, ensure that you are storing and handling the paper correctly. Please refer to "Paper Storage Environment" on page A.9.

Guidelines for Using Paper

For the best result, use conventional 75 g/m^2 (20 lb) paper. Ensure that the paper is of good quality, and free of cuts, nicks, tears, spots, loose particles, dust, wrinkles, voids, and curled or bent edges.

If you are unsure of what type of paper you are loading, such as bond or recycled paper, check the label on the package.

The following problems may cause print quality deviations, jamming or even damage to the machine:

Symptom	Problem with Paper	Solution
Poor print quality or toner adhesion, problems with feeding	Too moist, too rough, too smooth or embossed; faulty paper lot	Try another kind of paper, between 100 ~ 400 Sheffied, 4 ~ 5 % moisture content.
Dropout, jamming, curl	Stored improperly	Store paper flat in its moisture-proof wrapping.
Increased gray background shading/machine wear	Too heavy	Use lighter paper, use the rear output slot.
Excessive curl problems with feeding	Too moist, wrong grain direction or short-grain construction	• Use the rear output slot. • Use long-grain paper.

Symptom	Problem with Paper	Solution
Jamming, damage to machine	Cutouts or perforations	Do not use paper with cutouts or perforations.
Problems with feeding	Ragged edges	Use good quality paper.

NOTES:
- Do not use letterhead paper printed with low-temperature inks, such as those used in some types of thermography.
- Do not use raised or embossed letterhead.
- The machine uses heat and pressure to fuse toner to the paper. Insure that any colored paper or preprinted forms use inks that are compatible with this fusing temperature (200 °C or 392 °F for 0.1 second).

Paper Specifications

Category	Specifications
Acid Content	5.5 pH or lower
Caliper	0.094 ~ 0.18 mm (3.0 ~ 7.0 mils)
Curl in Ream	Flat within 5 mm (0.02 in.)
Cut Edge Conditions	Cut with sharp blades with no visible fray.
Fusing Compatibility	Must not scorch, melt, offset or release hazardous emissions when heated to 200 °C (392 °F) for 0.1 second.
Grain	Long Grain
Moisture Content	4 % ~ 6 % by weight
Smoothness	100 ~ 400 Sheffied

Paper Output Capacity

Output Location	Capacity
Face-down output tray	150 sheets of 75 g/m^2 bond (20 lb) paper
Face-up output slot	1 sheet of 75 g/m^2 bond (20 lb) paper

Paper Storage Environment

Paper storage environmental conditions directly affect the feed operation.

Ideally, the machine and paper storage environment should be at or near room temperature, and not too dry or humid. Remember that paper is hygroscopic; it absorbs and loses moisture rapidly.

Heat works with humidity to damage paper. Heat causes the moisture in paper to evaporate, while cold causes it to condense on the sheets. Heating systems and air conditioners remove most of the humidity from a room. As paper is opened and used, it loses moisture, causing streaks and smudging. Humid weather or water coolers can cause the humidity to increase in a room. As paper is opened and used it absorbs any excess moisture, causing light print and dropouts. Also, as paper loses and gains moisture it can become distorted. This can cause paper jams.

Care should be taken not to purchase more paper than can be used in a short time (about 3 months). Paper stored for long periods may experience heat and moisture extremes, which can cause damage. Planning is important to prevent damage to large supplies of paper.

Unopened paper in sealed reams can remain stable for several months before use. Opened packages of paper have more potential for environment damage, especially if they are not wrapped with a moisture-proof barrier.

The paper storage environment should be properly maintained to ensure optimum performance. The required condition is 20 to 24 °C (68 to 75 °F), with a relative humidity of 45 % to 55 %. The following guidelines should be considered when evaluating the paper's storage environment:

- Paper should be stored at or near room temperature.
- The air should not be too dry or too humid.
- The best way to store an opened ream of paper is to rewrap it tightly in its moisture-proof wrapping. If the machine environment is subject to extremes, unwrap only the amount of paper to be used during the day's operation to prevent unwanted moisture changes.

Envelopes

Envelope construction is critical. Envelope fold lines can vary considerably, not only between manufacturers, but also within a box from the same manufacturer. Successful printing on envelopes depends upon the quality of the envelopes. When selecting envelopes, consider the following components:

- Weight: The weight of the envelope paper should not exceed 90g/m^2 (24lb) or jamming may occur.
- Construction: Prior to printing, envelopes should lie flat with less than 6mm (0.25in.) curl, and should not contain air.
- Condition: Envelopes should not be wrinkled, nicked, or otherwise damaged.

- Temperature: You should use envelopes that are compatible with the heat and pressure of the machine.
- Size: You should only use envelopes within the following size ranges

NOTES:

- Use only the manual feeder to print envelopes.
- You may experience some paper jams when using any media with a length less than 140 mm (5.5 in.). This may be caused by paper that has been affected by environmental conditions. For optimum performance, make sure you are storing and handling the paper correctly. Please refer to "Paper Storage Environment" on page A.9.

Envelopes with Double Side Seams

Double side-seams construction has vertical seams at both ends of the envelope rather than diagonal seams. This style may be more likely to wrinkle. Be sure the seam extends all the way to the corner of the envelope as illustrated below.

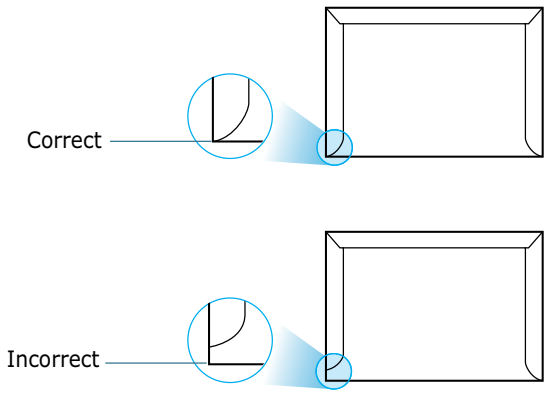

Envelopes with Adhesive Strips or Flaps

Envelopes with a peel-off adhesive strip or with more than one flap that folds over to seal must use adhesives compatible with the heat and pressure in the machine. The extra flaps and strips might cause wrinkling, creasing, or even jams and may even damage the fuser.

Envelope Margins

The following gives typical address margins for a commercial #10 or DL envelope.

Type of Address	Minimum	Maximum
Return address	15 mm (0.6 in.)	51 mm (2 in.)
Delivery address	51 mm (2 in.)	90 mm (3.5 in.)

NOTES:

- For the best print quality, position margins no closer than 15 mm (0.6 in.) from the edges of the envelope.
- Avoid printing over the area where the envelope's seams meet.

Envelope Storage

Proper storage of envelopes helps contribute to print quality. Envelopes should be stored flat. If air is trapped in an envelope, creating an air bubble, then the envelope may wrinkle during printing.

Labels

CAUTIONS:

- To avoid damaging the machine, use only labels recommended for laser printers.
- To prevent serious jams, always use the manual feeder to print labels and always use the rear output tray.
- Never print on the same sheet of labels more than once and never print on a partial sheet of labels.

When selecting labels, consider the quality of each component:

- Adhesives: The adhesive material should be stable at 180°C (356°F), the machine's fusing temperature.
- Arrangement: Only use labels with no exposed backing between them. Labels can peel off sheets with spaces between the labels, causing serious jams.
- Curl: Prior to printing, labels must lie flat with no more than 13mm (5in.) of curl in any direction.
- Condition: Do not use labels with wrinkles, bubbles, or other indications of separation.

Transparencies

Transparencies used in the machine must be able to withstand 180°C (356°F), the machine's fusing temperature.

CAUTION: To avoid damaging the machine, use only transparencies recommended for use in laser printers.

INDEX

A

adding documents 6.26
ADF (Automatic Document Feeder), load 4.3
ADF rubber pad, replace 8.13
automatic dialing
    group 6.17
    one-touch 6.14
    speed 6.15
automatic redialing 6.9

B

broadcasting faxes 6.21

C

canceling
    fax 6.8
    print 3.5
    scan 5.5
    scheduled faxes 6.27
characters, enter 1.34
cleaning
    drum 8.11
    inside 8.4
    outside 8.4
    scan unit 8.5
collated copy 4.4
connection
    AC power 1.18
    extension phone 1.16
    parallel 1.17
    telephone line cord 1.15
consumables 8.12
control panel 1.6
copying 4.3
    collation 4.4
    default setting, change 4.7
    image 4.5
    number of pages 4.5
    time out, set 4.8

D

date and time, set 1.36
delay receive polling 6.25
delayed fax 6.22
display language, change 1.32
document
    jam, clear 9.2
    loading 1.12
    preparing 4.2
drum, clean 8.11

E

error messages 9.8
extension phone, connect 1.16

F

Favorite setting, use 3.6
fax system, set
    advanced settings 6.32
    basic settings 6.2
fitting to page, print 3.13
front output tray, use 2.5

G

graphic properties, set 3.8
group dial
    dialing 6.19
    editing 6.18
    setting 6.17

H

handset, attach 1.8
help, use 3.6

I

installing
    Linux software 7.15
    Macintosh software 7.2

toner cartridge 1.10
Windows software 1.21

J

jam, clear
document 9.2
paper 9.3

L

Linux
common problems 9.24
driver, install 7.15
printing 7.23
scanning 7.25

M

machine ID, set 1.33
Macintosh
common problems 9.23
driver, install 7.2
printing 7.7
memory, clear 8.2
MFP driver, install
Linux 7.15
Macintosh 7.2
Windows 1.21

N

network printer, set 3.22
notifying toner low 8.10

O

one-touch dial
dialing 6.15
storing 6.14
orientation, print 3.3, 7.7, 7.24
output location, select 2.4
overlay, use 3.18

P

paper guidelines 2.3
paper jam, clear 9.3
paper level indicator 2.7
paper load
in manual feeder 2.8
in paper tray 1.12
paper load capacity 2.2
paper properties, set 3.7
paper size, set
manual feeder 2.10
paper tray 1.37
print 3.7, 7.7, 7.24
paper source, set 3.8, 7.11, 7.24
paper type 2.2
paper type, set
manual feeder 2.10
paper tray 1.37
print 3.8, 7.7, 7.24
paper, load 6.11
parallel, connect 1.17
polling 6.25
poster, print 3.14
power save mode, use 1.41
print order, set 3.4
print resolution 3.9, 7.10, 7.13
printer driver, install
Linux 7.15
Macintosh 7.2
Windows 1.21
printer properties
Linux 7.23
Macintosh 7.9
windows 3.2
printing
fitting to a selected paper size 3.13
from Linux 7.23
from Macintosh 7.7
from Windows 3.2
multiple pages on one sheet 3.10
Phonebook list 6.20
posters 3.14
reduced or enlarged document

3.12
reports 6.30
using overlays 3.18
watermarks 3.15
priority fax 6.24
problems, solve
copying 9.19
error messages 9.8
faxing 9.21
Linux 9.24
Macintosh 9.23
paper feeding 9.11
printing 9.12
printing quality 9.15
scanning 9.20

R

rear output slot, use 2.5
receiving a fax
in Ans/Fax mode 6.12
in Fax mode 6.11
in Secure Receiving mode 6.28
in Tel mode 6.11
in the memory 6.13
redialing
automaically 6.8
manually 6.9
reduced/enlarged
copy 4.6
print 3.12, 7.7
Remote Control Panel 6.35
reports, print 6.30
resolution
fax 6.6
print 3.9, 7.10

S

scanning
Linux 7.25
Windows 5.2
searching Phonebook 6.19
Secure Receiving mode 6.28
sending a fax
automatically 6.7
manually 6.8
sharing printer, set 3.22
SmarThru
install 1.21
uninstall 1.30
sounds, set 1.38
specifications
facsimile A.5
general A.2
paper A.6
printer A.4
scanner and copier A.3
speed dial
dialing 6.16
storing 6.15
system requirements
Linux 7.15
Macintosh 7.2
Windows 1.21

T

tel line, connect 1.15
toll save mode, use 1.40
toner cartridge
install 1.10
life 8.7
redistribute 8.7
replace 8.8
toner save mode, use 1.39
TWAIN, scan 5.6

U

uninstalling
MFP driver
Linux 7.17
Windows 1.29
Remote Control Panel 1.29
SmarThru 1.30
USB
connect 1.17
mode, change 9.14

V

volume, adjust
ringer 1.38
speaker 1.38

W

watermarks, use 3.15

Home

Visit us at:
www.samsungprinter.com

Rev.1.00