SAMSUNG

5G CPE Outdoor Installation Manual

Describes product installation and requirement procedure.

Document Version 1.0
December 2017

Radio Access Network

Document Number: TBA

© 2018 SAMSUNG Electronics Co., Ltd.

All Rights Reserved. The contents of this document/presentation contain proprietary information that must be kept confidential. No part of this document shall be photocopied, reproduced, stored in a retrieval system, or transmitted, in any form or by any means whether, electronic, mechanical, or otherwise without the prior written permission of SAMSUNG Electronics Co., Ltd.

No warranty of accuracy is given concerning the contents of the information contained in this publication. To the extent permitted by law no liability (including liability to any person by reason of negligence) will be accepted by SAMSUNG Electronics Co., Ltd., its subsidiaries or employees for any direct or indirect loss or damage caused by omissions from or inaccuracies in this document. SAMSUNG Electronics Co., Ltd. reserves the right to change details in this publication without notice.

SNMTC-v3-0312

This manual should be read and used as a guideline for properly installing and/or operating the product. Owing to product variations across the range, any illustrations and photographs used in this manual may not be a wholly accurate depiction of the actual products you are using.
This manual may be changed for system improvement, standardization and other technical reasons without prior notice.
Samsung Networks documentation is available at **http://www.samsungdocs.com**

Contents

Preface **vi**

Conventions in this Document vi
New and Changed Information vii
Revision History vii
Organization of This Document vii
Related Documentation vii
Personal and Product Safety viii
Equipment Markings xii

Chapter 1 Before Installation **1**

System View and External Interface 1
CPE Outdoor View 1
CPE Outdoor External Interface 3
Specifications 4
Cautions for Installation 5
Before Installing 5
While Installing 5
After Installing 5
Installation Tools 7

Chapter 2 Installing System **9**

Installation Procedure 9
System Arrangement 10
Transporting and Unpacking 11
Bringing in Items 11
Unpacking Items 11
Fixing System 12
Fixing Unit Bracket Assembly 12
Fixing System on a Pole Type 13
Fixing System on a Wall Type 17

Chapter 3 Inspect the Installation **23**

Appendix A Acronyms **27**

Appendix B Standard Torque **28**

Copyright © 2018, All Rights Reserved.

List of Figures

Figure 1. CPE Outdoor View 1
Figure 2. CPE Outdoor View(include Cable Cover) 2
Figure 3. CPE Outdoor External Interface 3
Figure 4. Procedure to Install the CPE Outdoor 9
Figure 5. CPE Outdoor Arrangement Pole type Installation 10
Figure 6. CPE Outdoor Arrangement Wall type Installation 10
Figure 7. Fixing Unit Bracket Assembly(1) 12
Figure 8. Fixing Unit Bracket Assembly(2) 13
Figure 9. Fixing Mounting bracket on the Pole (1) 14
Figure 10. Fixing Mounting bracket on the Pole (2) 15
Figure 11. Fixing Mounting bracket on the Pole (3) 16
Figure 12. Fixing CPE Outdoor on the Pole Mounting Bracket 17
Figure 13. CPE Outdoor Marking Dimensions for Wall Type 18
Figure 14. Marking Wall Type 19
Figure 15. Fixing Mounting Bracket on a Wall (1) 21
Figure 16. Fixing Mounting Bracket on the Wall(2) 21
Figure 17. Fixing CPE Outdoor on the Wall Mounting Bracket 22
Figure 18. Installation Inspection Procedure 23

Copyright © 2018, All Rights Reserved.

List of Tables

Table 1. Specifications 4
Table 2. Basic Installation Tools 7
Table 3. Parts and Tools for Fixing Unit Bracket on CPE Outdoor 12
Table 4. Parts and Tools for Fixing Mounting bracket on the Pole 13
Table 5. Parts and Tools for Fixing CPE Outdoor on the Pole 16
Table 6. Tools for Marking 17
Table 7. Tools for Drilling 19
Table 8. Anchor Bolt Drill Bits and Hole Depth 19
Table 9. Drilling Example 20
Table 10. Parts and Tools for Fixing Mounting Bracket on the Wall 20
Table 11. Parts and Tools for Fixing CPE Outdoor on the Wall 22
Table 12. Construction Situation Checklist 24
Table 13. Standard Torque Value for Fastening Bolts 28
Table 14. Brass Bolts Torque Value 28
Table 15. Connector Connection Torque Value 28

Copyright © 2018, All Rights Reserved.

Preface

This manual describes how to install a 5G CPE Outdoor and how to connect its cables. This manual includes the following 5G CPE Outdoor:

- CPE Outdoor

Conventions in this Document

Samsung Networks product documentation uses the following conventions.

Symbols

Symbol	Description
	Indicates a task.
	Indicates a shortcut or an alternative method.
	Provides additional information.
	Provides information or instructions that you should follow to avoid service failure or damage to equipment.
	Provides information or instructions that you should follow to avoid personal injury or fatality.
	Provides antistatic precautions that you should observe.

Menu Commands

menu | command

This indicates that you must select a command on a menu, where **menu** is the name of the menu, and **command** is the name of the command on that menu.

File Names and Paths

These are indicated by a bold typeface. For example:

Copy **filename.txt** into the **/home/folder1/folder2/bin/** folder.

User Input and Console Screen Output Text

Input and output text is presented in the Courier font. For example,

```
context <designated epc-context-name>
```

CLI commands are presented in bold small caps. For example,

Type the **RTRV-NE-STS** command in the input field.

Copyright © 2018, All Rights Reserved.

New and Changed Information

The following table describes information that has been added/changed since the previous publication of this manual.

Change Type	Change Description

Revision History

The following table lists all versions of this document.

Document Version	Publication Date	Remarks
1.0	February 2018	First version

Organization of This Document

Section	Title	Description
Chapter 1	Before Installation	This chapter introduces CPE Outdoor and describes items should be understood before installation.
Chapter 2	Installing System	This chapter describes the procedures to install the CPE Outdoor.
Chapter 3	Connecting Cables	This chapter describes the procedures to connect the cables to the CPE Outdoor installed.
Chapter 4	Inspect the Installation	This chapter describes the procedures of inspecting installation status after CPE Outdoor installation and cabling is completed.
Appendix A	Acronyms	This annex describes the acronyms used in this manual.
Appendix B	Clean the Optical Connectors	This annex describes the procedure of cleaning the optical connector and cleaning tool.
Appendix C	Standard Torque	This annex describes the standard torque when fastening the bolt.

Related Documentation

- 5G RAN System Description

Copyright © 2018, All Rights Reserved.

Personal and Product Safety

This product safety information includes European directives, which you must follow. If these do not apply in your country, please follow similar directives that do apply in your country.

Proposition 65 Warning (US Only)

State of California Proposition 65 Warning (US only)

WARNING: This product contains chemicals known to the State of California to cause cancer and birth defects or other reproductive harm.

Electrical

The product is designed to operate from a -48 V DC supply and is therefore classified as Safe Extra Low Voltage (SELV) equipment.

All structural parts are grounded and all input and outputs have built-in isolation from the network. All input and output ports that connect to external power sources are designed to meet relevant national safety requirements.

The product contains hazardous energy levels as defined by EN 60950. Care must be taken when maintaining this equipment as injury to personnel or damage to the equipment could result from mistakes. Maintenance should only be carried out by trained and competent engineers who are familiar with the relevant procedures and instructions.

Lasers

The product is fitted with optic modules rated as Class 1 radiation-emitting devices under EN 60825-1. During installation, operation, and maintenance, never look into the end of an optical fiber directly or by reflection either with the naked eye or through an optical instrument. Do not operate equipment with exposed fiber connectors-cover these with fiber cables or blanking caps. Do not remove equipment covers during operation unless requested to do so in the documentation. Carry out normal safety precautions when trimming fibers during installation.

Manual Handling

Care should be taken when handling equipment. Give due consideration to the weight of the equipment, the physical capability of the individual(s) handling the equipment, and movements such as twisting, bending and stooping, which could lead to skeletal and muscular injuries.

Installation

Installation must be carried out by trained and competent engineers only. All relevant safety measures should be taken to ensure equipment is not connected to

Copyright © 2018, All Rights Reserved.

live power and transmission sources during installation. Equipment must be correctly installed in order to meet the relevant safety standards and approval conditions.

Each power feed to the unit requires a separate fused feed from the provided power supply. The cable between the power distribution point and the installed equipment must have a minimum cross-sectional area of 2.5 mm^2.

Rack-mountable equipment must be placed in a standard 19-inch rack and secured with the appropriate fixings as detailed in the installation manual.

Maintenance

Maintenance must only be carried out by a suitably trained and competent technician. All safety instructions must be carefully observed at all times. Equipment covers should not be removed while live power and transmission is connected unless in a controlled environment by trained technicians.

Fire

The product is powered from a -48 V DC supply. To protect against fire, the equipment is fused.

Environment

The product must be operated in an environment with the specified relative humidity and ambient temperature ranges.

Keep all liquids away from the equipment as accidental spillage can cause severe damage.

Cooling

The product cools down by its own set of cooling fans housed in a fan module. Each fan module detects a fan that is not operating normally. LEDs on the front panel of the fan module provide an alarm indication in the event of fan failure.

In the event of fan failure, take urgent remedial action to restore full cooling capacity.

Take appropriate measures to ensure that fan modules do not start spinning during repair and maintenance procedures.

Anti-Static Precautions

The circuit boards and other modules in the product are sensitive to and easily damaged by static electricity. If any card or sub-assembly is removed from the unit, the following anti-static precautions must be observed at all times:

- Service personnel must wear anti-static wrist straps.
- Circuit boards and sub-assemblies must be placed on ground conductive mats

Copyright © 2018, All Rights Reserved.

or in conductive bags.

- All tools must be discharged to ground before use.
- The anti-static wrist strap and cord must be checked at regular intervals for their suitability for use.

Grounding

To comply with EN 60950, the equipment must be connected to a safety grounding point via a permanent link. Grounding points are located on the product for this purpose. Always connect the ground cable before fitting other cables. The product must remain grounded continuously unless all connections to the power supply and data network are all removed.

If equipment is grounded through a cabinet or rack, make sure it is done so properly according to the installation instructions.

Power Supply Connection

The equipment is designed to be powered from a -48 V DC supply. Power connections and installation of associated wiring must be carried out by a suitably qualified technician.

Only devices that comply with all relevant national safety requirements should be connected to the unit's power supply inlets. Other usage will invalidate any approval given to this equipment.

Connection of this equipment to devices that are not marked with all relevant national safety requirements may produce hazardous conditions on the network.

When the power supply is obtained by a rectifier/safety isolation transformer, the supply must meet the requirements of EN 60950 providing double/reinforced insulation between hazardous voltages and SELV/TNV circuits. Any battery must be separated from hazardous voltages by reinforced insulation.

Indirect Connection

Before indirectly connecting any equipment to another device through a shared power supply, ALWAYS seek advice from a competent engineer.

Devices that are not marked according to the relevant national safety standards may produce hazardous conditions on the network.

Product Disposal

To reduce the environmental impact of products, Samsung has joined WEEE compliance activities.

The WEEE symbol on the product indicates that the product is covered by the European Directive 2002/96/CE for the disposal of Waste Electrical and Electronic Equipment (WEEE). This means that the product should be disposed of separately from the municipal waste stream via designated collection facilities appointed by

Copyright © 2018, All Rights Reserved.

the government or the local authorities. This will help prevent potential negative consequences for the environment and human health. Please check the terms and conditions of the purchase contract for information about correct disposal.

Battery Disposal

The product contains a battery on the processor card. The battery should not be disposed of with other household waste. Where marked, the chemical symbols Hg, Cd or Pb indicate that the battery contains mercury, cadmium or lead above the reference levels in EC Directive 2006/66. The battery incorporated in this product is not user replaceable. For information on its replacement, please contact your service provider. Do not attempt to remove the battery or dispose it in a fire. Do not disassemble, crush, or puncture the battery.

End of life recycling materials information is available from Samsung.

California USA Only

This Perchlorate warning applies only to primary CR (Manganese Dioxide) Lithium coin cells in the product sold or distributed ONLY in California USA

‘Perchlorate Material-special handling may apply, See www.dtsc.ca.gov/hazardouswaste/perchlorate.’

Copyright © 2018, All Rights Reserved.

Equipment Markings

This marking on the product, accessories or literature indicates that the product and its electronic accessories (e.g. charger, headset, USB cable) should not be disposed of with other household waste at the end of their working life. To prevent possible harm to the environment or human health from uncontrolled waste disposal, please separate these items from other types of waste and recycle them responsibly to promote the sustainable reuse of material resources.

Household users should contact either the retailer where they purchased this product, or their local government office, for details of where and how they can take these items for environmentally safe recycling.

Business users should contact their supplier and check the terms and conditions of the purchase contract. This product and its electronic accessories should not be mixed with other commercial wastes for disposal.

Correct disposal of batteries in this product

(Applicable in countries with separate collection systems.)

The marking on the battery, manual or packaging indicates that the battery in this product should not be disposed of with other household waste. Where marked, the chemical symbols Hg, Cd or Pb indicate that the battery contains mercury, cadmium or lead above the reference levels in EC Directive 2006/66.

The battery incorporated in this product is not user replaceable. For information on its replacement, please contact your service provider. Do not attempt to remove the battery or dispose it in a fire. Do not disassemble, crush, or puncture the battery. If you intend to discard the product, the waste collection site will take the appropriate measures for the recycling and treatment of the product, including the battery.

Protective earth

CPE Outdoor should be grounded.

Copyright © 2018, All Rights Reserved.

Chapter 1 Before Installation

This chapter introduces CPE Outdoor and describes the items that you should know before installation.

System View and External Interface

This section provides the pictorial view of the CPE Outdoor and its interfaces.

CPE Outdoor View

Figure below depicts the physical structure of the CPE Outdoor.

Figure 1. CPE Outdoor View

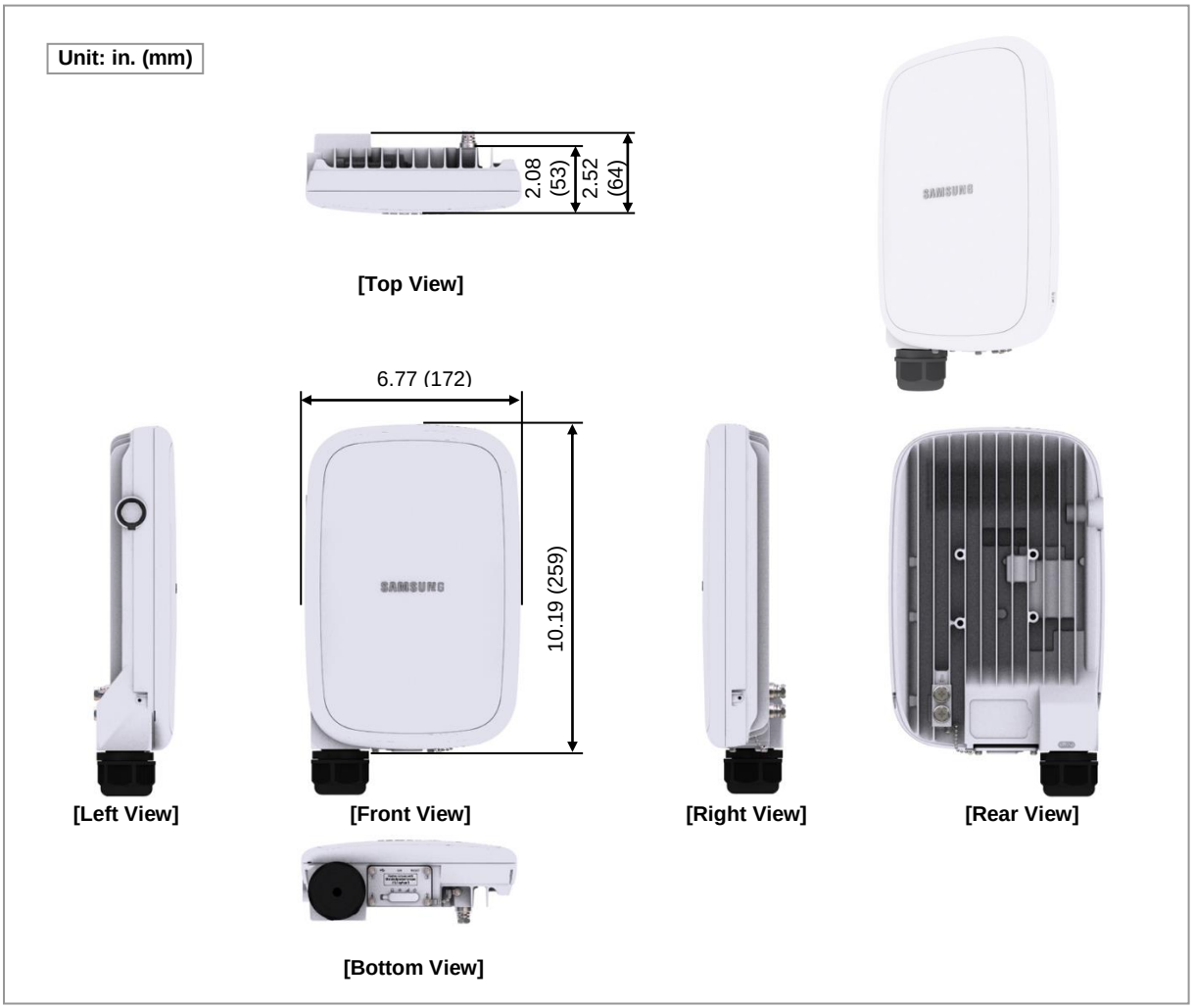

Copyright © 2018, All Rights Reserved.

Figure 2. CPE Outdoor View(include Cable Cover)

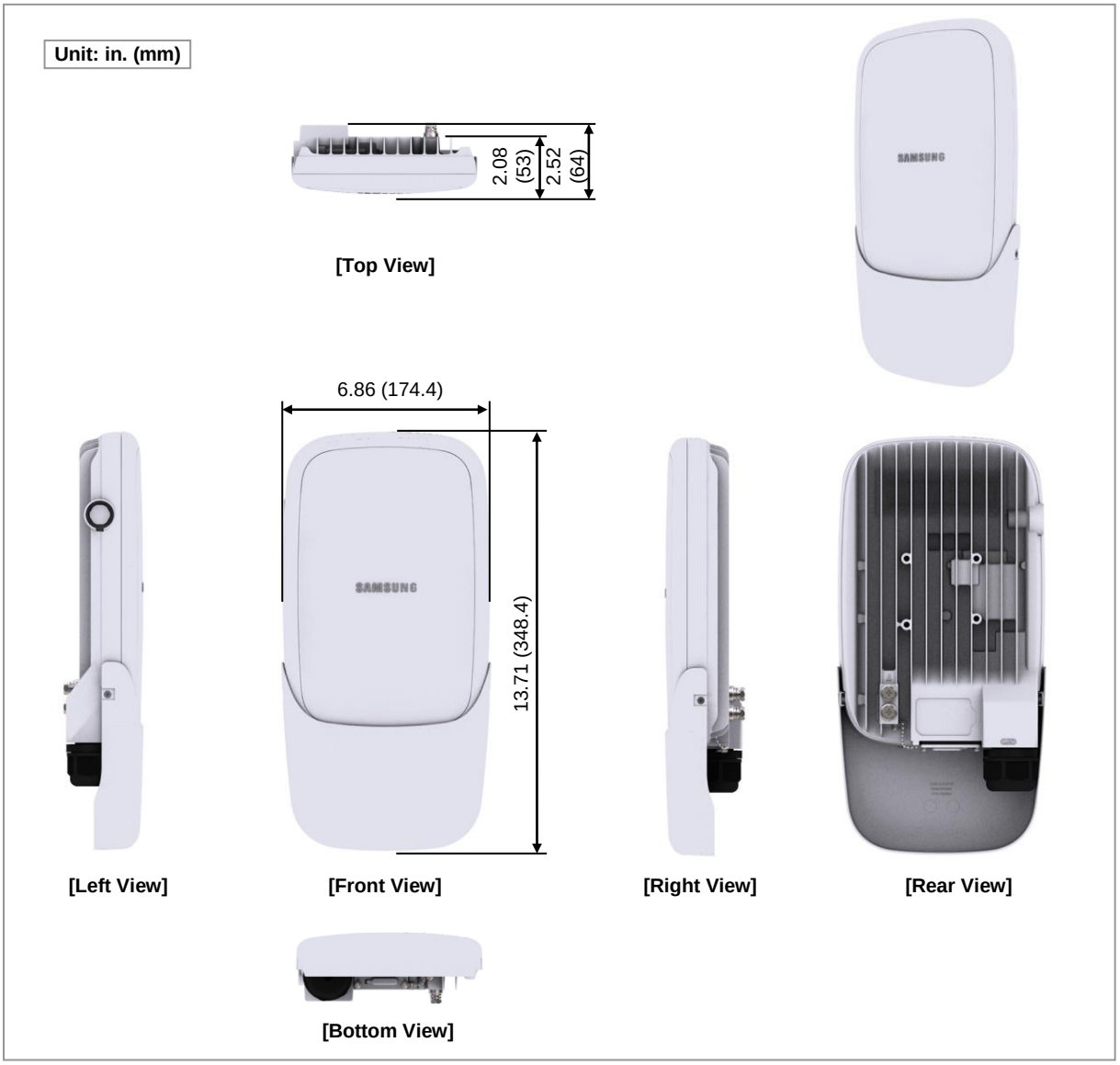

Copyright © 2018, All Rights Reserved.

CPE Outdoor External Interface

Figure below depicts the external interface structure of the CPE Outdoor.

Figure 3. CPE Outdoor External Interface

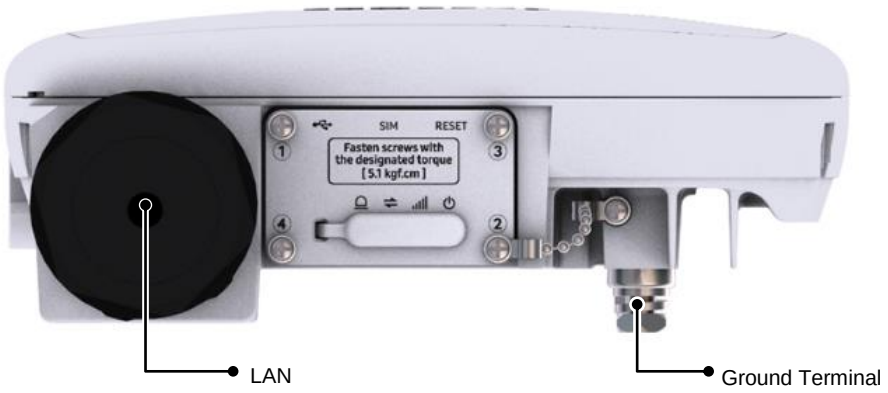

[Bottom View]

Copyright © 2018, All Rights Reserved.

Specifications

Table below lists the main specifications of the CPE Outdoor.

Table 1. Specifications

Item	Specifications
Technology	5G (follows Verizon 5GTF's latest version)
Operating Frequency	27.5 GHz - 28.35 GHz
Channel Bandwidth	100 MHz
Operating Bandwidth	100MHz x 8 Carrier
Antenna Configuration	Integrated Antenna • Data Channel: 2Tx/2Rx • RF chain per Data Channel: 32
RF Output Power	36dBm/Path (EIRP, Antenna Gain: 19dBi)
Power	Outdoor: PoE (Midspan)
Ethernet	Outdoor: RJ45 1 Port • PoE, 100Base-TX or 1000Base-T
USB	USB 2.0 1 Port
Bluetooth	BLE4.0
USIM	Nano-SIM 1 Port • Replaceable regular SIM • support Class C operating conditions: terminal or a smart card operating at 1,8 V ± 10 %
LED	Total: 4EA • Power: Green LED • Signal: 3 Color (Green/Amber/Red) • Connection: 3 Color (Green/Amber/Red) • Alarm: 3 Color (Green/Amber/Red)
Factory Reset	1EA (Push Button Switch)
Operational Temperature	Outdoor: -30 to 55 °C
Humidity	5% - 90%, non-condensing, not to exceed 30g/m^3 absolute humidity
IP rating	Outdoor: IP65
EMC	FCC Part 15 Subpart B
FCC	FCC Part 30 (5G RF)
Installation	Outdoor: Pole/Wall mounting bracket
Warranty	Warranty: 1 Year
Size(W x D x H)	6.77 in.(172 mm) x 2.08 in.(53 mm) x 10.19 in.(259 mm)
Volume	< 2.5 L (main frame, excluding bracket)
Weight	< 2.0 kg (main frame, excluding bracket)
Power Consumption	< 25 W

Copyright © 2018, All Rights Reserved.

Cautions for Installation

Observe the safety instructions described in this section when installing the system. Installation must be done in accordance with the applicable local electric codes.

Before Installing

- Post warning signs in areas where high-voltage cables are installed.
- Post ‘off limit’ signs in areas where accidents are most expected.
- Use guardrails or fences to block open areas such as ditches, open roof areas, and scaffolds.

Install the system in the restricted access area.

While Installing

The system power must be cut off before installing.

Ensure the power switch of power supply is off when installing the system. Installing the system with power switch on may cause system damage or fatal human injury when connecting or disconnecting cables.

Ensure that workers wear protection gloves and goggles to prevent injury from debris while drilling holes in a wall or ceiling.

Do not wear accessories such as watches and rings to prevent electrical shock.

Cover unused ports with a cap. This prevents foreign substances from entering into the unused ports.

To prevent foreign substances, outdoor air, and moisture from entering the cable inlet (including cable gland and conduit), finish the inlet as follows:
Unused inlet: Use the hole finishing materials including cap and rubber packing.
Cable-installed inlet: After cable installation, block any space in the inlet with tape, compressed sponge, rubber packing, and silicone.

After Installing

Remove any debris produced during the work and clean up the installation site.

In the system, the laser beam light runs through the optical cable. The workers must handle the optical cables with care as the laser beam can seriously damage the eyes.

Copyright © 2018, All Rights Reserved.

Ensure that the workers do not damage installed cables while cleaning the system.

While cleaning the power supply device, take precaution that the device does not come in contact with foreign objects that may cause power failure.

Copyright © 2018, All Rights Reserved.

Installation Tools

Table below lists the basic tools needed for installation. The additional tools required for each site need to be identified and arranged during a site survey before starting the installation.

Table 2. Basic Installation Tools

Number	Name	Specification	Purpose of use
1	Torque Driver	Apply a torque range : 6-22 lbf·in	For fastening M3 Screw
		Apply a torque range : 20-90 lbf·in	For fastening M6 SEMS (Hexagon+)
2	Screw Driver Bit	+, Number 2	For fastening M3 Screw
		+, Number 3	For fastening M6 SEMS (Hexagon+)
3	Screw Driver	+, Number 2	For loosening M3 Screw
		+, Number 3	For loosening M6 SEMS (Hexagon+)
		T25H	For loosening M5 SEMS
4		T25H	For fastening Torx Screw (T25H)
5	Tape Measure	16 ft./150 ft.	Tape measure for length measurement
6	Power Extension Cable	100 ft.	Basic tool
7	Level	Normal	For horizontality and verticality
8	Hammer Drill	Normal	Wall type drilling
9	Concrete Drill Bit	1/4 in. (6 mm)	For Plastic Anchor
10	Cable Cutter	0.24-1.26 in. (6-32 mm)	Cable cutting
11	Crimping Tool	14 AWG-4 AWG (1.5-16 mm^2)	Pressure terminal for crimping
12	Wire Stripper	Apply cable thickness: 1.5-6.2 in. (4-16 mm)	Cable sheath for removal

Copyright © 2018, All Rights Reserved.

Number	Name	Specification	Purpose of use
13	Nipper	Basic Tool	For cutting cable
14	LAN Tool	Basic Tool	RJ45 crimper
15	Industrial Scissor	Basic Tool	Cutting
16	Knife	Basic Tool	Cutting
17	Multi tester	Digital Pocket Tester	To measure voltage and current to detect cable disconnection
18	Compass	Normal	Check azimuth during installation
19	Heating Gun	50-300°C	Shrinking Heat Shrink Tube
20	Hammer	Normal	Anchor fixing

The required installation tools may vary depending on the site conditions.
In addition to the basic tools, protractor, ladder, safety equipment, and cleaning tools must also be arranged, considering the site conditions.

Copyright © 2018, All Rights Reserved.

Chapter 2 Installing System

This chapter describes installation procedure of the CPE Outdoor.

Installation Procedure

Figure below depicts the procedure to install the CPE Outdoor.

Figure 4. Procedure to Install the CPE Outdoor

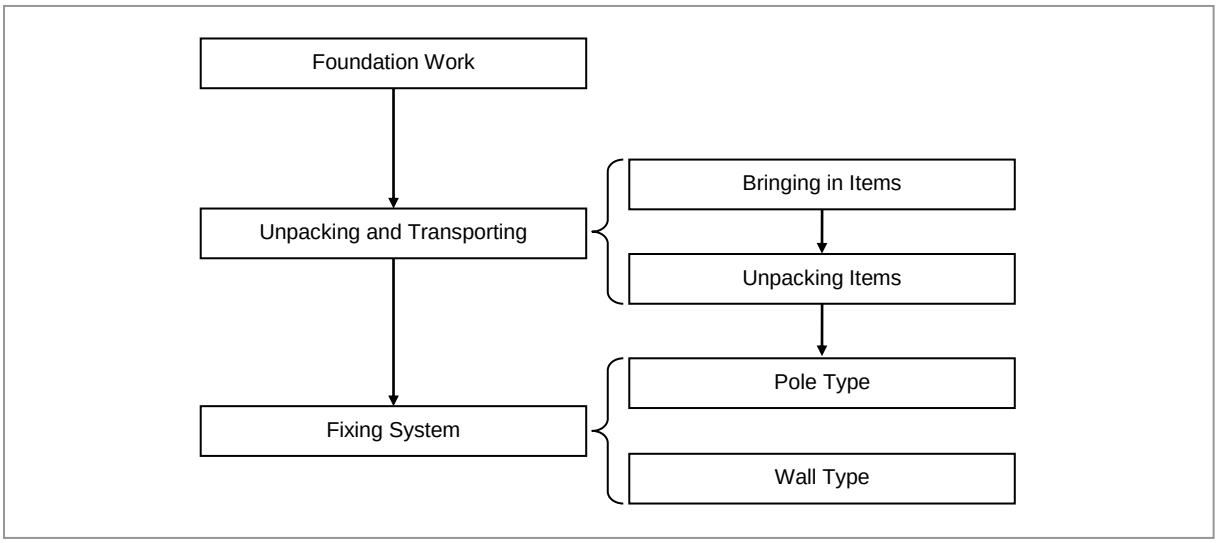

Copyright © 2018, All Rights Reserved.

System Arrangement

A minimum distance must be secured around the CPE Outdoor, in each direction for installation and maintenance.

Figure below depicts the minimum distance that must be secured for pole type installation of the CPE Outdoor.

Figure 5. CPE Outdoor Arrangement Pole type Installation

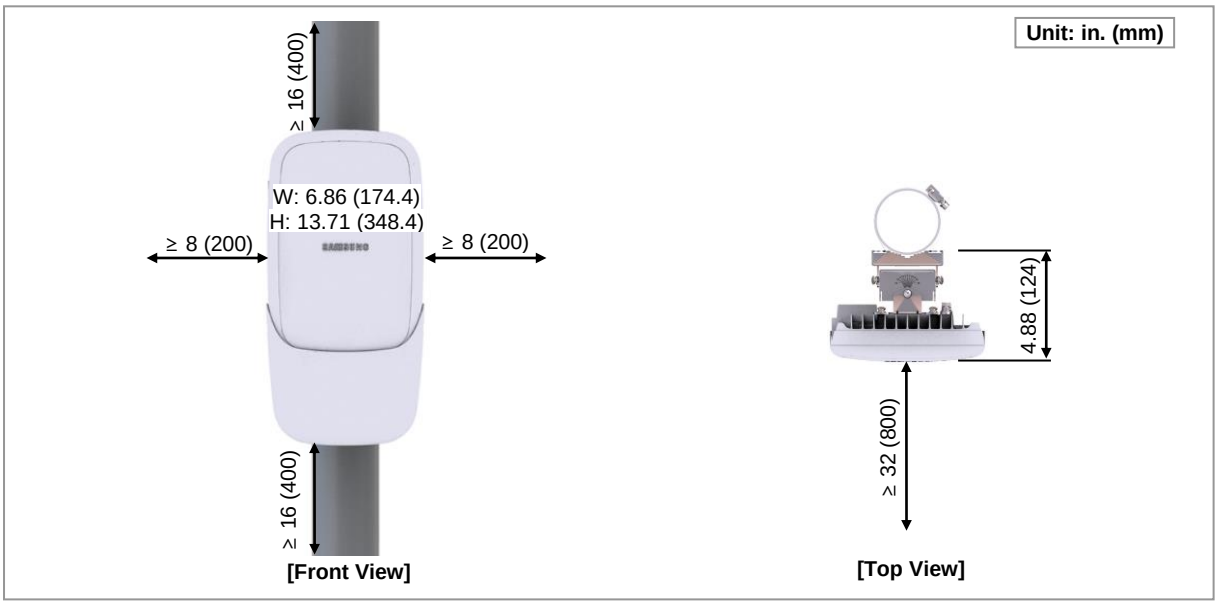

Figure below depicts the minimum distance that must be secured for wall type installation of the CPE Outdoor.

Figure 6. CPE Outdoor Arrangement Wall type Installation

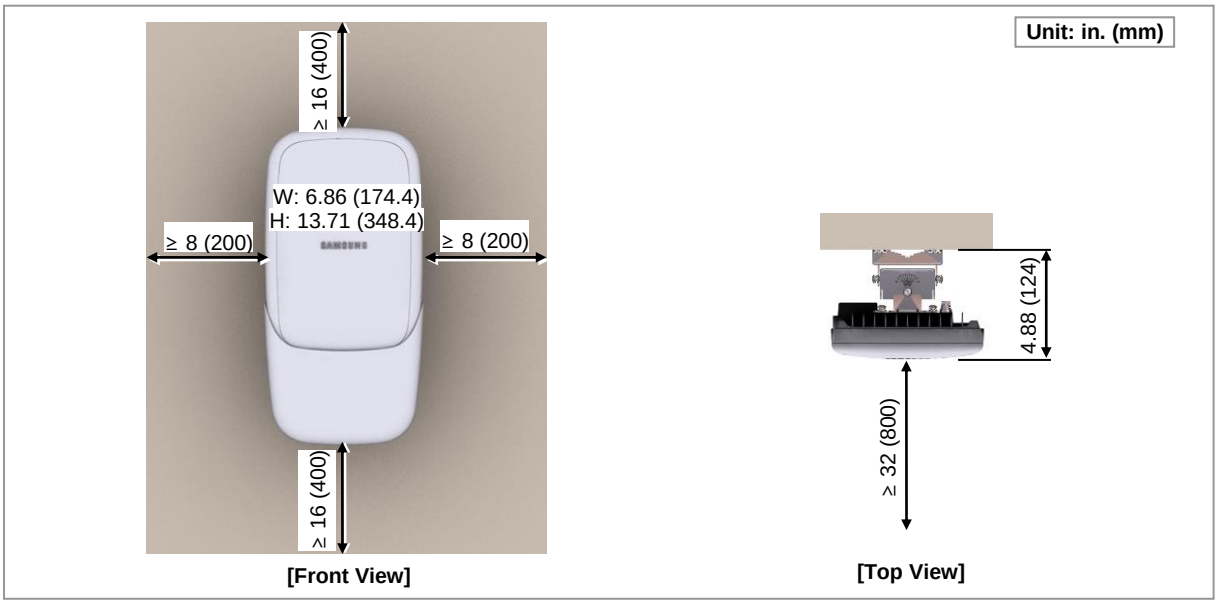

Copyright © 2018, All Rights Reserved.

Transporting and Unpacking

This section details how to transport the items to the installation place and describes the procedure to unpack cabinets and other components.

Bringing in Items

Take care of the following at each stage of transportation of the items:

- Before moving a system, check storage place for the system and remove obstacles in advance.
- When carrying the system:
- Fasten the system firmly to the transport vehicle or carrier to prevent damage to the system from a vibration or shock.
- Use an elevator to prevent accidents. However, if the system must be carried by people, ensure there are enough people to carry the system.
- The system must not be shocked physically.
- Care must be taken to protect the system from dust, moisture, and static electricity.

Unpacking Items

To unpack the items, ensure the following:

- The items must be packed until they reach the installation place.
- The items are classified in accordance with each job specification and stored at a place that does not interfere with working.
- Unpacked systems must be installed immediately. If immediate installation of the systems is not planned, the systems must be stored in the installation place temporarily.
- Unpack only external packing, leaving the internal packing in unpacked status.
- Unpack the inner packaging after each system is placed on its installation location.
- Dispose by-products (packaging waste) in accordance with waste management rules. Do not recycle the by-products.

Copyright © 2018, All Rights Reserved.

Fixing System

This section details the procedure to fix the CPE Outdoor.

Fixing Unit Bracket Assembly

To fix a unit bracket assembly on the CPE Outdoor

1 Ensure that the items mentioned in below table are available.

Table 3. Parts and Tools for Fixing Unit Bracket on CPE Outdoor

Category	Description		
Parts	Unit Bracket Assembly		1 Set
	Fasteners	M5 × L14 SEMS (T25H)	4 EA
Recommended Torque Value	M5 SEMS		25 lbf·in (29 kgf·cm)
Working Tools	• Torque Driver (20-90 lbf·in) • Screw Driver Bit (T25H) • Screw Driver (T25H)		

2 Loosen the fixed screw of unit bracket to 0.2 inch on the left/right side as shown in figure below.

Figure 7. Fixing Unit Bracket Assembly(1)

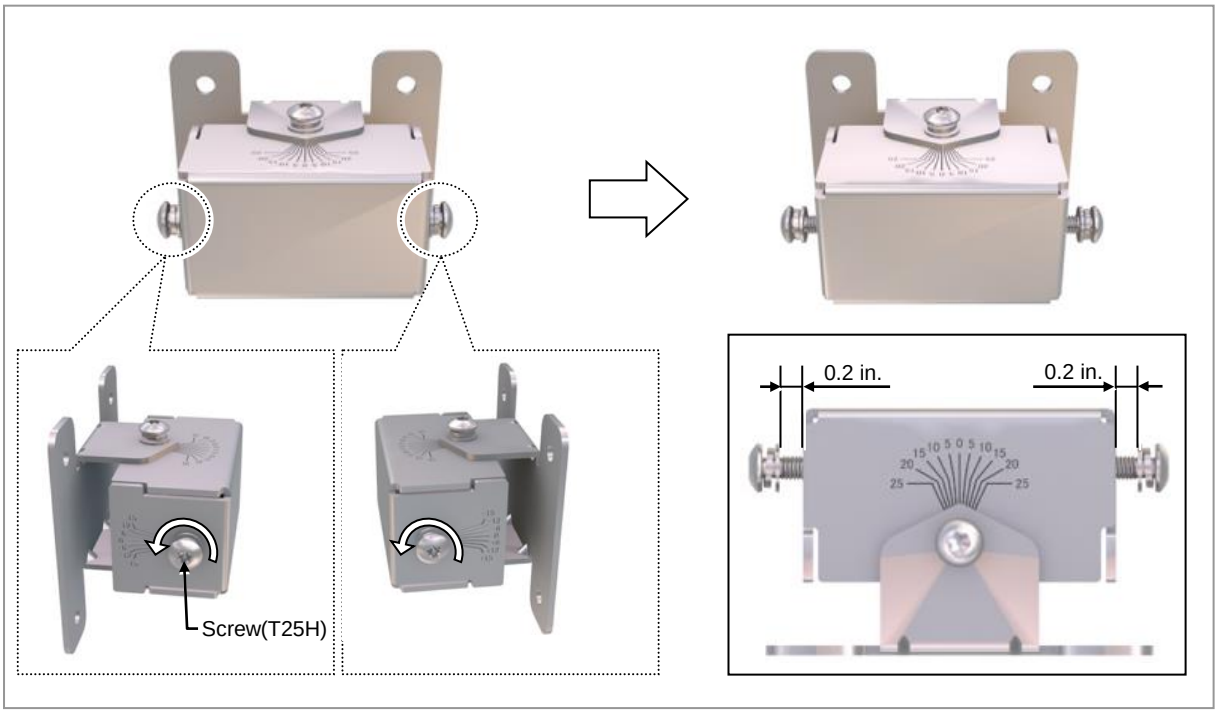

Copyright © 2018, All Rights Reserved.

3 Fix the unit bracket to the fixing hole of the CPE Outdoor rear using fasteners as shown in figure below.

Figure 8. Fixing Unit Bracket Assembly(2)

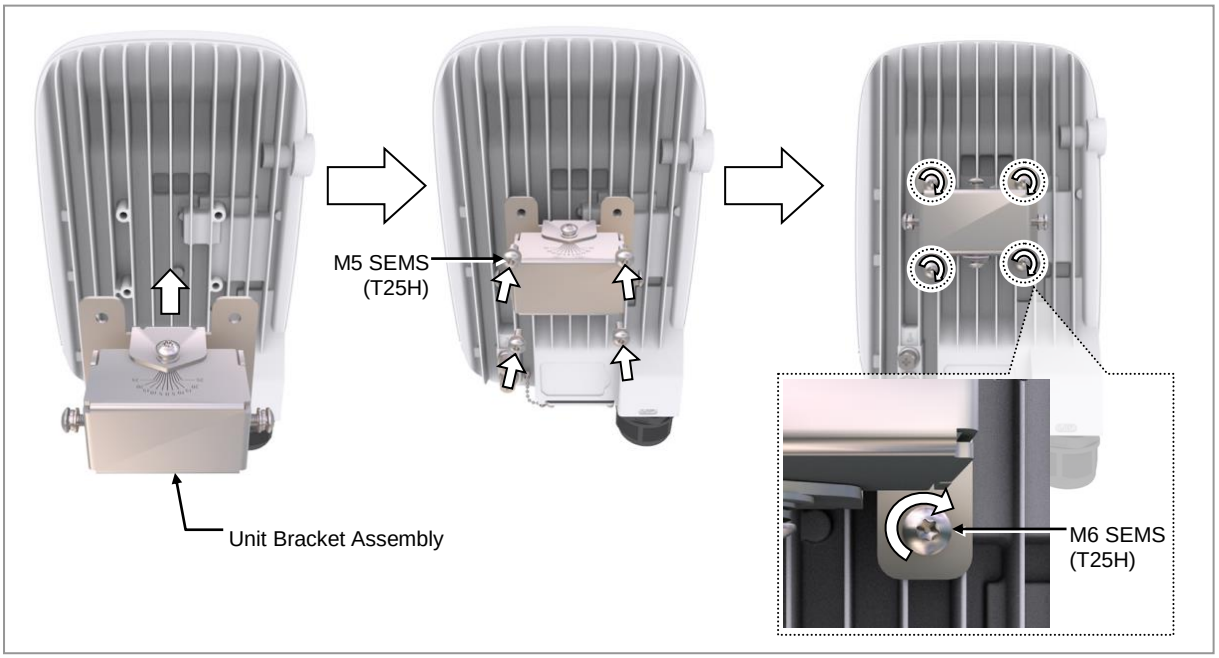

Fixing System on a Pole Type

The CPE Outdoor can be fixed on pole using mounting bracket or chain bracket assembly. This section details both procedures.

To fix a mounting bracket on the pole

1 Ensure that the items mentioned in below table are available.

Table 4. Parts and Tools for Fixing Mounting bracket on the Pole

Category	Description		
Parts	Mounting bracket		1 EA
	Fastener	Steel Band	2 EA
Recommended Torque Value	Steel Band Fixing Screw		48.5 lbf·in (56.1 kgf·cm)
Working Tools	• Torque Driver (20-90 lbf·in) • Screw Driver Bit ('+', Number 3)		

Copyright © 2018, All Rights Reserved.

The standard of the pole on which the mounting bracket can be attached using steel bands is 35 A to 100 A.

Pole Size (Diameter)	Length of Steel Band
50 A (2.4 in./60.5 mm)	502 mm
65 A (3 in./76.3 mm)	
80 A (3.5 in./89.2 mm)	
90 A (4 in./101.6 mm)	
100 A (4.5 in./114.3 mm)	
125 A (5.5 in./139.8 mm)	

2 Pass the steel band through the fixing hole of the mounting bracket, as shown in figure below.

Figure 9. Fixing Mounting bracket on the Pole (1)

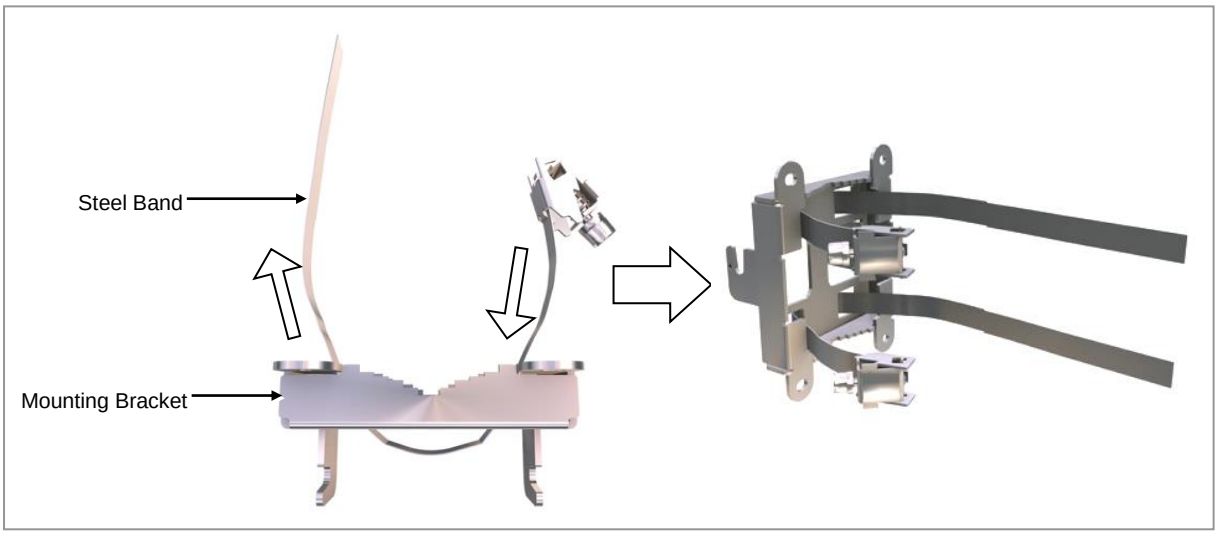

Copyright © 2018, All Rights Reserved.

3 Place a mounting bracket to the pole and fix the steel band, as shown in figure below.

Figure 10. Fixing Mounting bracket on the Pole (2)

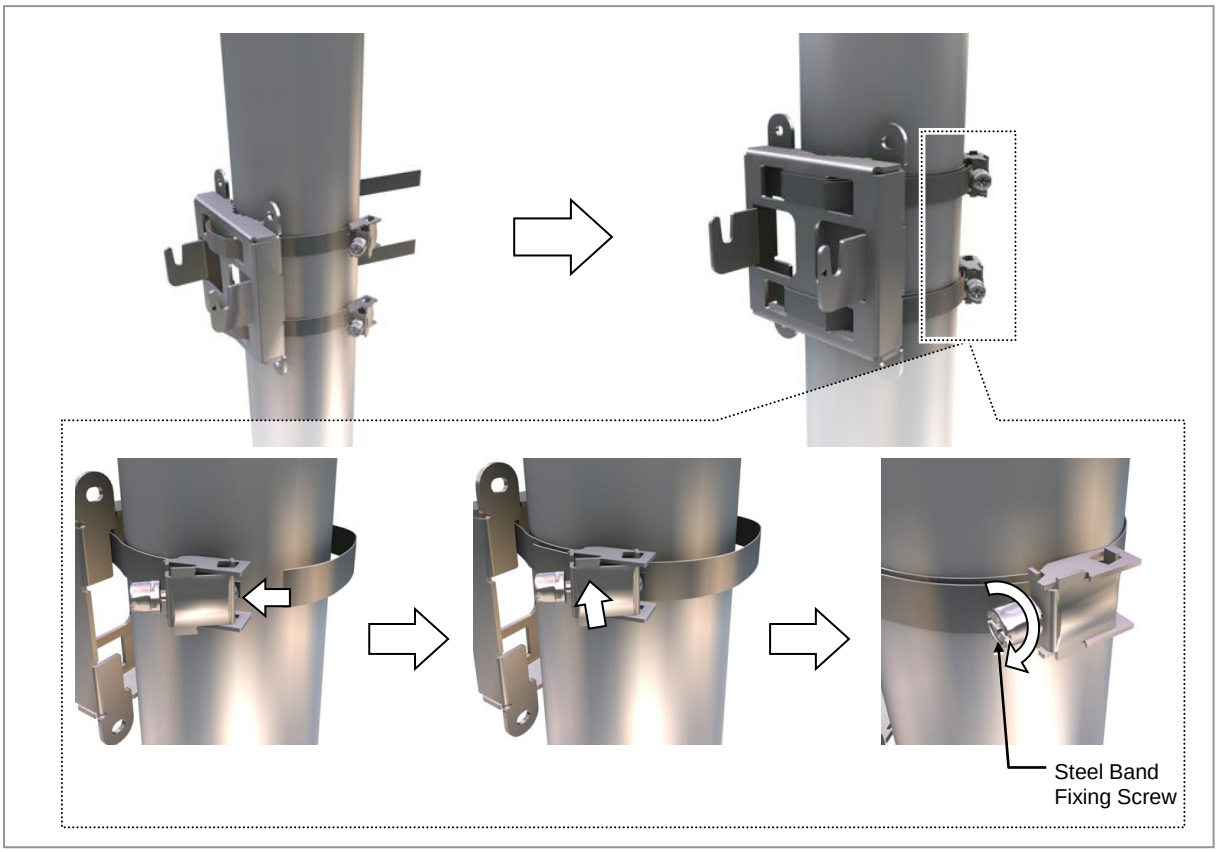

Copyright © 2018, All Rights Reserved.

4 Check the level of mounting bracket on the pole and adjust the level, as detailed in figure below.

Figure 11. Fixing Mounting bracket on the Pole (3)

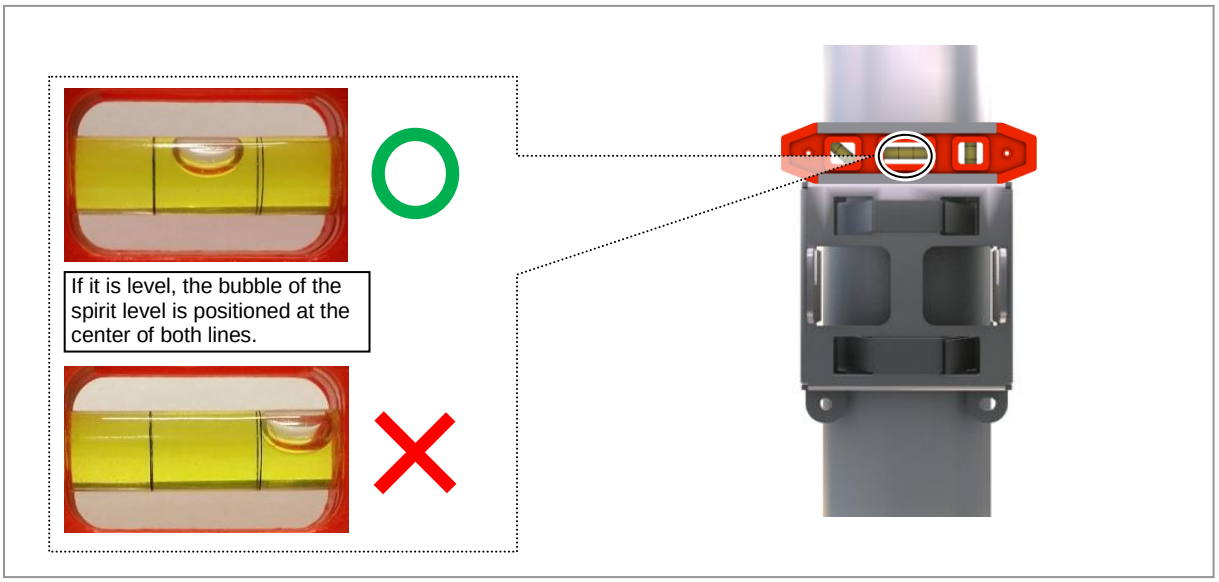

When fixing the mounting bracket on the pole, be sure to check the level of bracket. After finishing the installation, adjust the level minutely.

When poor leveling happens, adjust the position of fasteners used to fix the mounting bracket.

To fix the CPE Outdoor on the pole mounting bracket

1 Ensure that the items mentioned in below table are available.

Table 5. Parts and Tools for Fixing CPE Outdoor on the Pole

Category	Description		
Parts	Fasteners	M5 × L14 SEMS (T25H) (Fastened to the unit bracket)	2 EA
Recommended Torque Value	M5 SEMS		25 lbf·in (29 kgf·cm)
Working Tools	• Screw Driver Bit (T25H) • Torque Driver (20-90 lbf·in)		

2 Hang the fasteners over the top groove of the pole mounting bracket, and then fix it using fasteners. This is depicted in figure below.

Copyright © 2018, All Rights Reserved.

Figure 12. Fixing CPE Outdoor on the Pole Mounting Bracket

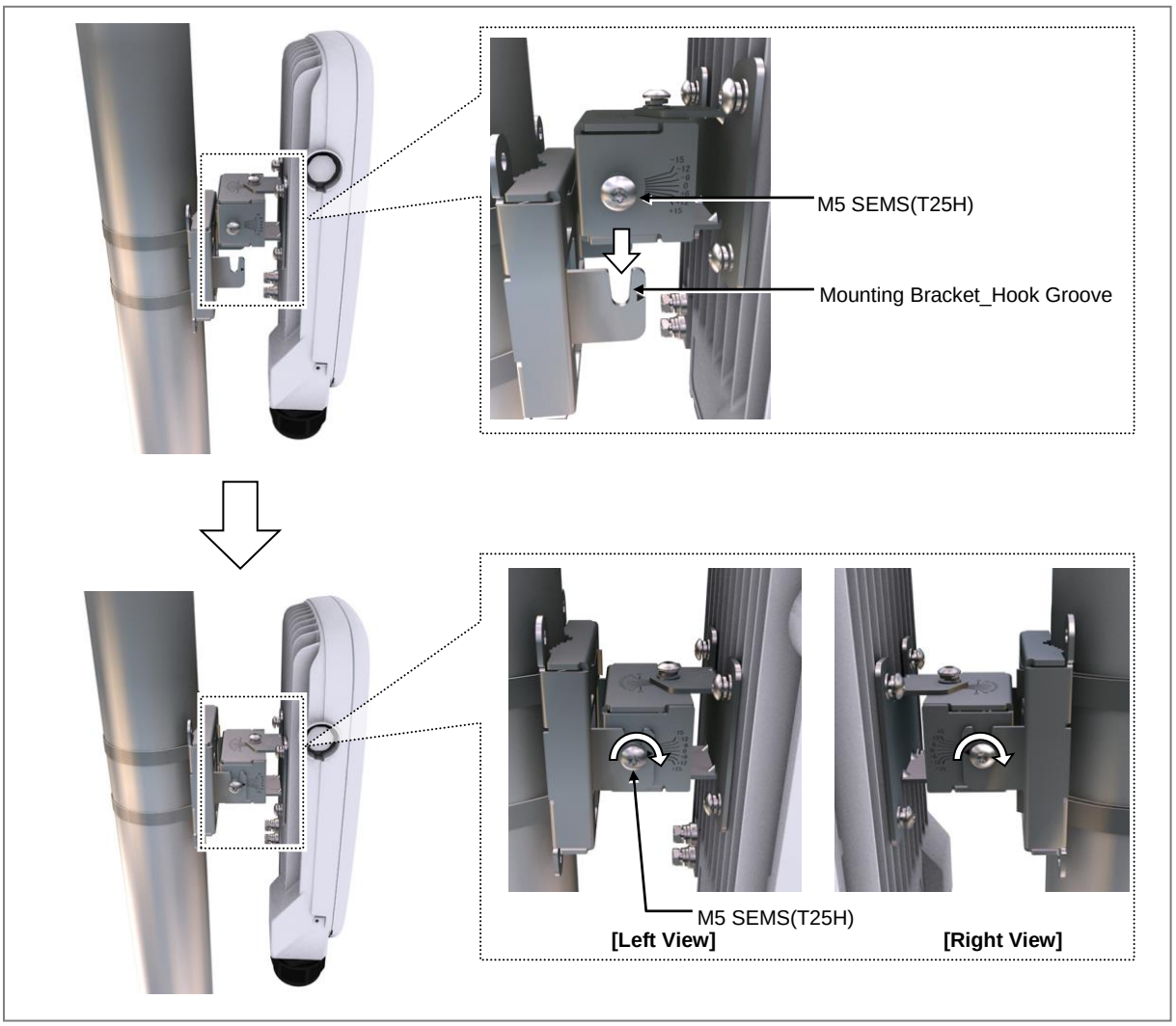

Fixing System on a Wall Type

An CPE Outdoor can be fixed on wall using a mounting bracket. This section details the procedures for fixing the mounting bracket on the wall and fixing the CPE Outdoor on the bracket.

To mark on the wall

1 Ensure that the items mentioned in below table are available.

Table 6. Tools for Marking

Category	Description
Working Tools	• Tape Measure • Permanent Maker • Level

Copyright © 2018, All Rights Reserved.

Perform leveling test before drilling by referring to *System Leveling*, to ensure the positions marked are horizontal or vertical. If the result shows the marked positions are not horizontal or vertical, modify the marking positions.

When the position to place the system is determined, place the system on that position and then mark the positions where anchor bolts are to be fixed. This reduces marking error range.

2 Check the distance between the location for fixing the CPE Outdoor and the anchor bolt hole, as shown in figure below.

Figure 13. CPE Outdoor Marking Dimensions for Wall Type

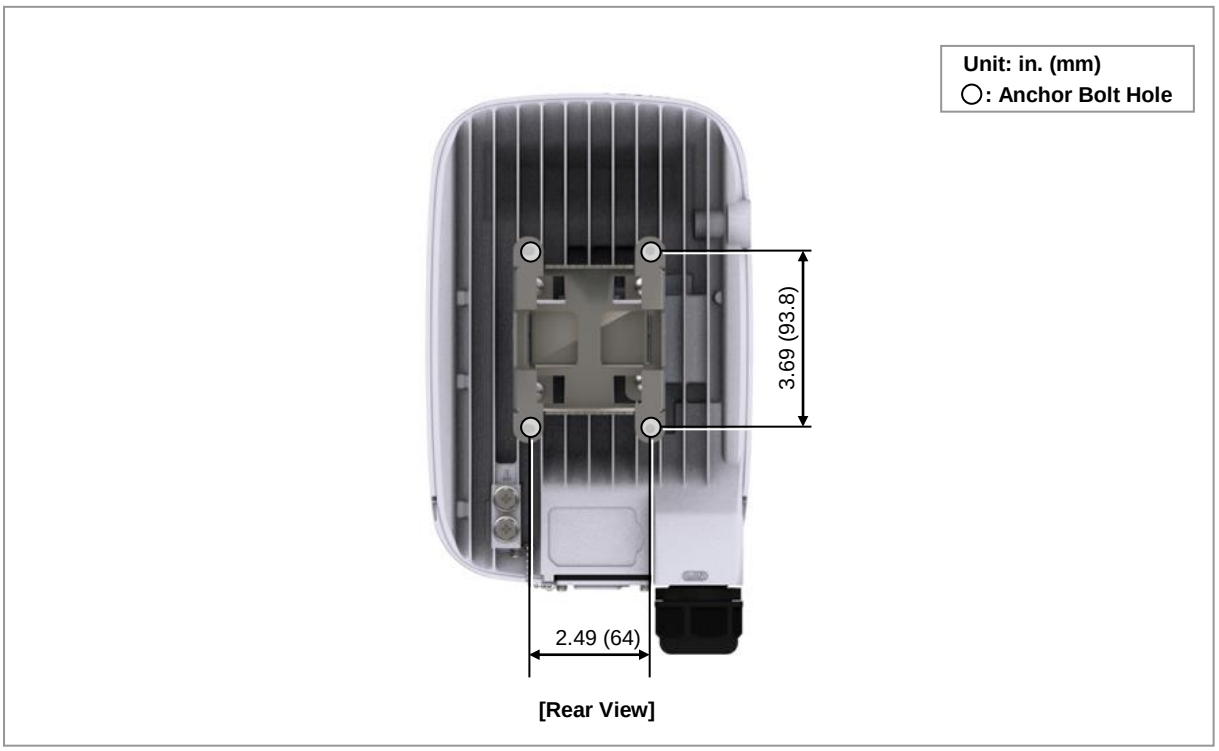

3 Place the mounting bracket on the fixing location, check the level status using a level, and adjust the level of the bracket assembly.

4 If the level status is normal, mark the anchor bolt holes on the wall. This is detailed in figure below.

Copyright © 2018, All Rights Reserved.

Figure 14. Marking Wall Type

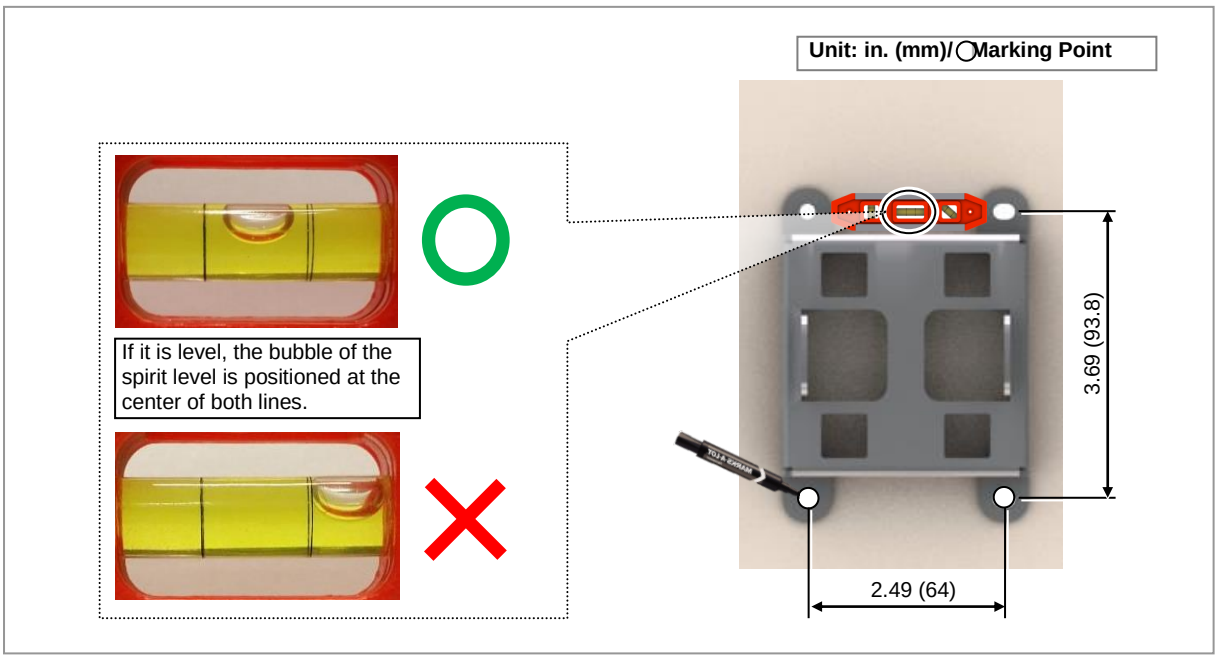

To drill the anchor holes

1 Ensure that the items mentioned in below table are available.

Table 7. Tools for Drilling

Category	Description
Woking Tools	● Hammer Drill ● Drill Bit (1/4 inch) ● Vacuum Cleaner

Table 8. Anchor Bolt Drill Bits and Hole Depth

Category	Anchor Bolt	Drill Bits	Hole Depth
CPE Outdoor	Φ 6	1/4 in. (6 mm)	1.4 in. (35 mm)

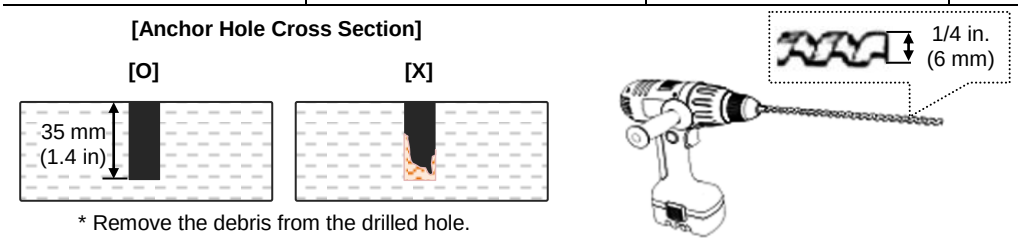

* Remove the debris from the drilled hole.

2 Drill anchor holes at the marked points. Remove dust from the holes using a vacuum cleaner.

Copyright © 2018, All Rights Reserved.

Table 9. Drilling Example

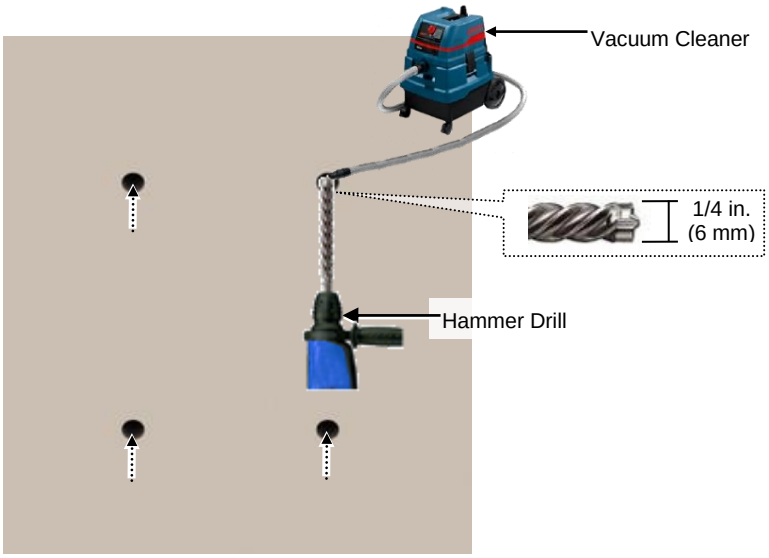

To fix the mounting bracket on the wall

1 Ensure that the items mentioned in below table are available.

Table 10. Parts and Tools for Fixing Mounting Bracket on the Wall

Category	Description		
Parts	Mounting Bracket		1 EA
	Fastener	M4 × L25 PH+ Taptite Screw	4 EA
		Φ 6 × L30 Plastic Anchor	4 EA
Recommended Torque Value	M4 PH+ Tapping Screw		13 lbf·in (15 kgf·cm)
Working Tools	● Torque Driver (6~22 lbf·in) ● Screw Driver Bit ('+', No. 2)		

Copyright © 2018, All Rights Reserved.

2 Fix the Φ 6 plastic anchors to the holes drilled on the wall.

Figure 15. Fixing Mounting Bracket on a Wall (1)

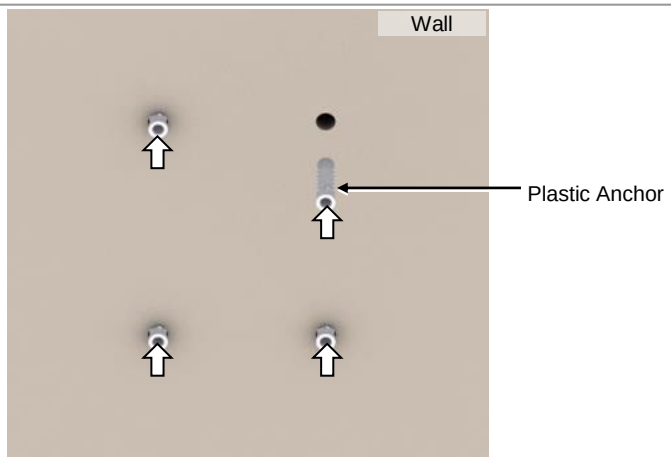

3 Place the Mounting bracket along with the fixed plastic anchors.

Figure 16. Fixing Mounting Bracket on the Wall(2)

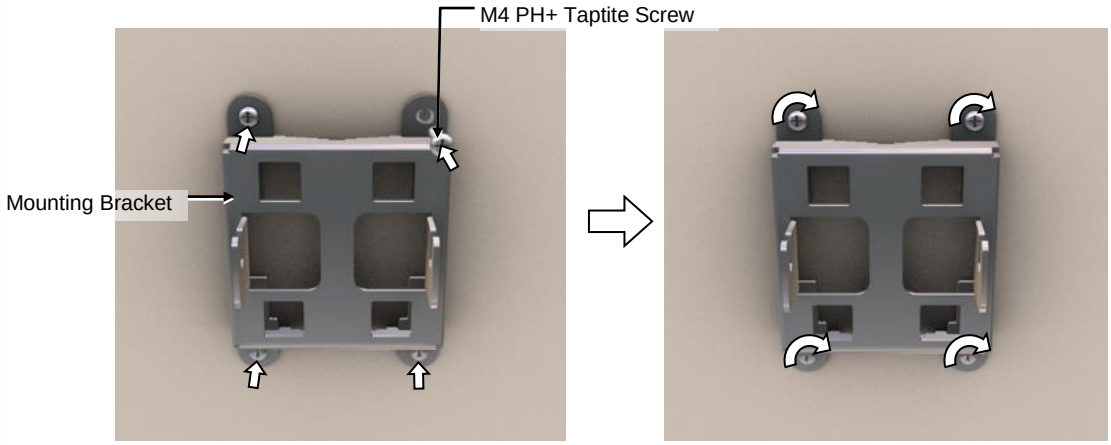

Copyright © 2018, All Rights Reserved.

To fix the CPE Outdoor on the wall

1 Ensure that the items mentioned in below table are available.

Table 11. Parts and Tools for Fixing CPE Outdoor on the Wall

Category	Description		
Parts	Fasteners	M5 × L14 SEMS (T25H) (Fastened to the unit bracket)	2 EA
Recommended Torque Value	M5 SEMS		25 lbf·in (29 kgf·cm)
Working Tools	• Screw Driver Bit (T25H) • Torque Driver (20-90 lbf·in)		

2 Hang the fasteners over the top groove of the wall mounting bracket, and then fix it using fasteners. This is depicted in figure below.

Figure 17. Fixing CPE Outdoor on the Wall Mounting Bracket

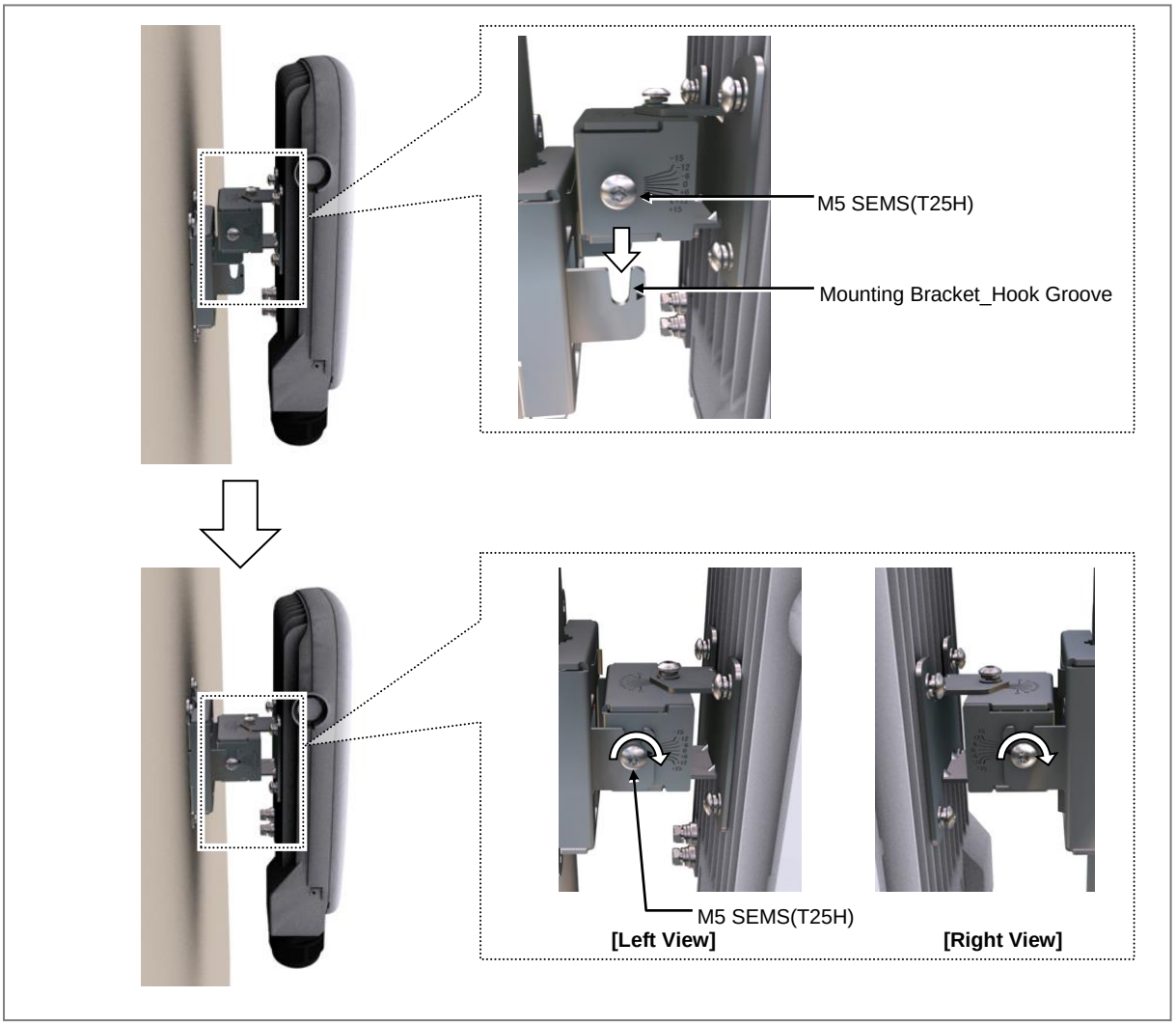

Copyright © 2018, All Rights Reserved.

Chapter 3 Inspect the Installation

This chapter describes the procedures to check installation status.

Figure below depicts the overall procedure for inspecting the installation status.

Figure 18. Installation Inspection Procedure

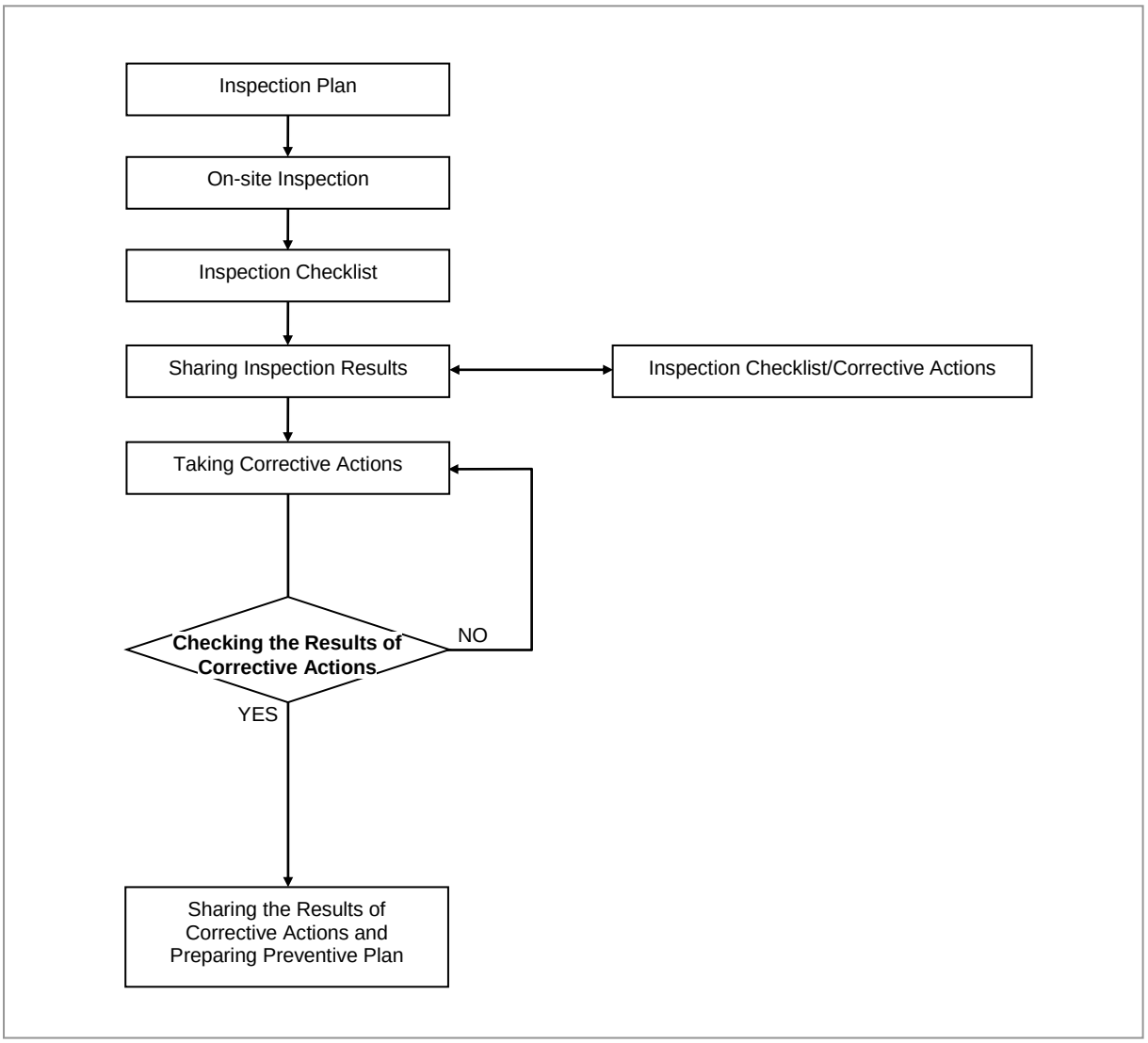

Inspection Plan

Create an inspection sheet per system and select an inspector to set an inspection schedule per site.

Copyright © 2018, All Rights Reserved.

On-site Inspection and Inspection Checklist

The on-site inspection is to perform inspection visually or using instruments for each specification, standard, and installation status, based on the inspection checklist at the site where the system is installed.

The inspector must record the results onto the inspection checklist during or after field inspection.

Sharing Inspection Results and Taking Corrective Actions

The inspector must share the inspection results (inspection checklist and corrective actions) with an installation operator. The installation operator must take the corrective actions, if necessary, after reviewing the requirements.

Checking the Results of Corrective Actions

The inspector must check if the corrective actions are properly taken. If they are not sufficient, the inspector must ask the installation operator to take the corrective actions again.

Sharing the Results of Corrective Actions and Preparing Preventive Plan

After the corrective actions are all completed, the inspector must share the results with the installation operator and relevant departments. The inspector must prepare a preventive plan to prevent the same or similar problems from re-occurring.

Construction Situation Checklist

Table below provides the checklist to check the installation of the CPE Outdoor and other devices.

Table 12. Construction Situation Checklist

Category	Check Items	Criteria	Result	
			Pass	Fail
Installing Equipment	Appearance of equipment and mechanical parts	Equipment damage such as dent, scratch, and crack		
	Placement of equipment and mechanical parts	Maintenance and horizontal/vertical placement		
	Leveling condition of equipment and mechanical parts	Horizontal/vertical status		
	Validity of status and specifications of fastening bolt, nut, and washer	Checking fasteners omission		
		Compliance with assembly order of fasteners		
		Compliance with fastening torque value		
	Insulation status	Checking electrical contact between insulators (insulation resistance tester)		
Grounding	Installation of ground bar	Checking the separation of communication/power/lightning		

Copyright © 2018, All Rights Reserved.

Category	Check Items	Criteria	Result	
			Pass	Fail
		grounding		
	Cable specification	Checking the specification		
	Cabling	Cable damage		
		Proper installation route		
		Compliance with the radius of curvature		
	Cable binding status	Binding status		
		Binding interval		
		Checking binding materials		
	Cable connection	Assembly condition of a pressure terminal		
		Fastening condition of a pressure terminal		
		Checking compliance with fastening torque value		
	Installation status of cable tag	Position		
		Marking content		
		Checking tag installation method		
Power	Installation status of power supply	Power supply capacity		
		Output voltage (tester)		
	Installation of circuit breaker	Checking circuit breaker capacity		
	Cable specification	Checking the specification		
		Checking the limit distance		
	Cabling	Cable damage		
		Proper installation route		
		Compliance with the radius of curvature		
	Cable binding status	Binding status		
		Binding interval		
		Checking binding materials		
	Cable connection	Checking cable connection (Pin Map)		
		Input voltage		
		Assembly condition of a pressure terminal and connector		
		Fastening condition of a pressure terminal and connector		
		Checking compliance with fastening torque value		
	Installation status of cable tag	Position		
		Marking content		
		Checking tag installation method		
Other data cables	Cable specification	Checking the specification		
	Cabling	Cable damage		
		Proper installation route		

Copyright © 2018, All Rights Reserved.

Category	Check Items	Criteria	Result	
			Pass	Fail
		Compliance with the radius of curvature		
	Cable binding status	Binding status		
		Binding interval		
		Checking binding materials		
	Cable connection	Checking cable connection (Pin Map)		
		Assembly condition of a connector		
		Fastening condition of a connector		
		Checking compliance with fastening torque value		
	Installation status of cable tag	Position		
		Marking content		
		Checking tag installation method		
		Checking tag installation method		
Others	Reserved ports	Checking port cap fastening status		
	Cable inlet status/Connection of equipment I/O port	Checking fastening status (Conduit/Cable Gland)		
	Cable tray and duct	Checking installation status		
	Status of inside/outside of the equipment and system surrounding area	Checking the stocking condition (waste parts, waste materials, and packing materials)		
Opinion				

■

Copyright © 2018, All Rights Reserved.

Appendix A Acronyms

AC	Alternating Current
CPE Outdoor	Access Unit
BH	Back Haul
DC	Direct Current
DL	DownLink
GNSS	Global Navigation Satellite System
GPS	Global Positioning System
MGB	Main Ground Bar
PDLC	Polymer Dispersed Liquid Crystal
RTN	Return
SELV	Safe Extra Low Voltage
SEMS	pre-asSEMbled washers and screws
S-FTP	Screened-Foiled Twisted Pair
TDD	Time Division Duplex
UL	UpLink
UTP	Unshielded Twisted Pair

Copyright © 2018, All Rights Reserved.

Appendix B Standard Torque

When operator fastens the bolt, use the standard torque values provided in tables below to prevent the equipment and bolt from damage and secure by fastening. When the torque value for each connection part is defined already, use the defined value.

Table 13. Standard Torque Value for Fastening Bolts

Bolt Spec.	Torque Value (N·m)	Torque Value (lbf·in)	Torque Value (kgf·cm)
M3	0.63	5.6	6.4
M4	1.5	13	15
M5	2.8	25	29
M6	4.9	43	50
M8	12	110	127
M10	25	217	250
M12	42	372	428

Table 14. Brass Bolts Torque Value

Bolt Spec.	Torque Value (N·m)	Torque Value (lbf·in)	Torque Value (kgf·cm)
M6	2.9	26	30
M8	6.3	56	64

Table 15. Connector Connection Torque Value

Connector	Torque Value (N·m)	Torque Value (lbf·in)	Torque Value (kgf·cm)
SMA connector	0.59	5.2	6
TNC connector	0.88	7.8	9
N-type connector	2	17	20
DIN-type connector	25	217	250
4.3-10-type connector	5	44	51

Torque value can be different, defending on the material, characteristic, and specification of the equipment and fastener. Ensure that you check the proper torque value for each specification of the equipment and the fastener.

Copyright © 2018, All Rights Reserved.

SAMSUNG

5G CPE Outdoor
Installation Manual

Document Version 1.0

© 2018 Samsung Electronics Co., Ltd.
All rights reserved.